GARDENA CITY COUNCIL

Regular Meeting Notice and Agenda

Council Chamber at City Hall
1700 West 162nd Street, Gardena, California
Website: www.cityofgardena.org

Tuesday, December 12, 2023
Closed Session 7:00 p.m.
Open Session 7:30 p.m.

TASHA CERDA, *Mayor*
MARK E. HENDERSON, *Mayor Pro Tem*
RODNEY G. TANAKA, *Council Member*
PAULETTE C. FRANCIS, *Council Member*
WANDA LOVE, *Council Member*

MINA SEMENZA, *City Clerk*
GUY H. MATO, *City Treasurer*
CLINT OSORIO, *City Manager*
CARMEN VASQUEZ, *City Attorney*
LISA KRANITZ, *Assistant City Attorney*

If you would like to participate in this meeting, you can participate via the following options:

1. **VIEW THE MEETING live on SPECTRUM CHANNEL 22 or ONLINE at** youtube.com/CityofGardena

2. **PARTICIPATE BEFORE THE MEETING** by emailing the Deputy City Clerk at publiccomment@cityofgardena.org by 5:00p.m. on the day of the meeting and write "Public Comment" in the subject line.

3. **ATTEND THE MEETING IN PERSON**

   PUBLIC COMMENT: The City Council will hear from the public on any item on the agenda or any item of interest that is not on the agenda at the following times:

   - Agenda Items – At the time the City Council considers the item or during Oral Communications
   - Non-agenda Items – During Oral Communications
   - Public Hearings – At the time for Public Hearings listed on the Agenda

   If you wish to address the Council, please complete a "Speaker Request" form and present it to the City Clerk or Sergeant of Arms. You will be called to the podium by name when it is your turn to address the Council. The City Council cannot legally take action on any item not scheduled on the Agenda. Such items may be referred for administrative action or scheduled on a future Agenda. Members of the public wishing to address the City Council will be given three (3) minutes to speak.

4. The City of Gardena, in complying with the Americans with Disabilities Act (ADA), requests individuals who require special accommodations to access, attend and/or participate in the City meeting due to disability, to please contact the City Clerk's Office by phone (310) 217-9565 or email cityclerk@cityofgardena.org at least 24 business hours prior to the scheduled general meeting to ensure assistance is provided. Assistive listening devices are available.

STANDARDS OF BEHAVIOR THAT PROMOTE CIVILITY AT ALL PUBLIC MEETINGS

- Treat everyone courteously;
- Listen to others respectfully;
- Exercise self-control;
- Give open-minded consideration to all viewpoints;
- Focus on the issues and avoid personalizing debate; and
- Embrace respectful disagreement and dissent as democratic rights, inherent components of an inclusive public process, and tools for forging sound decisions

Thank you for your attendance and cooperation

---

1. **ROLL CALL**

   PUBLIC COMMENT ON CLOSED SESSION

2. **CLOSED SESSION**

   2.A CONFERENCE WITH LEGAL COUNSEL- ANTICIPATED LITIGATION
   Significant exposure to litigation, pursuant to Gov. Code Section 54956.9(d)(2)-November 13, 2023, correspondence from attorney Kim Savage on behalf of Clear Recovery Center, Inc. regarding project at 1921 146th Street, Gardena
   11132023 correspondence from attorney K. Savage.pdf

   CITY ATTORNEY REPORT OUT OF CLOSED SESSION

3. **PLEDGE OF ALLEGIANCE**

   Brooklyn Grayson and Devine Egboh
   153rd Street Elementary School

4. **INVOCATION**

   Bishop Jones
   Church of Jesus Christ of Latter Day Saints

5. **PRESENTATIONS**

   5.A Gardena Events Video Presentation

6. **PROCLAMATIONS**

7. **APPOINTMENTS**

   7.A Council Appointments to Commissions, Committees, Councils and Boards (Appointees to be Ratified and Sworn In)

   Youth Commission - Aidan Madison
   (Appointed by Mayor Cerda)

8. **CONSENT CALENDAR**

NOTICE TO THE PUBLIC - Roll Call Vote Required On The Consent Calendar
All matters listed under the Consent Calendar will be enacted by one motion unless a Council Member requests Council discussion, in which case that item will be removed from the Consent Calendar and considered separately following this portion of the agenda.

PUBLIC COMMENT ON CONSENT CALENDAR

8.A Waiver of Reading in Full of All Ordinances Listed on this Agenda and that they be Read by Title Only
CONTACT: CITY CLERK

8.B Approve Minutes:
Regular Meeting of the City Council, November 14, 2023
Special Meeting of the City Council, December 7, 2023
CONTACT: CITY CLERK
11142023 REGULAR Minutes CC Meeting - FINAL.pdf
12072023 Special CC Meeting - FINAL.pdf

8.C Receive and File of Minutes:
Planning and Environmental Quality Commission, September 5, 2023
Planning and Environmental Quality Commission, November 7, 2023
CONTACT: COMMUNITY DEVELOPMENT
23_09_05 PCMIN
23_11_07_PCMIN.pdf

8.D Approval of Warrants/Payroll Register, November 28, 2023
CONTACT: CITY TREASURER
Warrant-Payroll Register 11-28-23.pdf

8.E Approval of Warrants/Payroll Register, December 12, 2023
CONTACT: CITY TREASURER
Warrant-Payroll Register 12-12-23.pdf

8.F Monthly Investment Portfolio, October 2023
CONTACT: CITY TREASURER
October 2023 Investment Report.pdf

8.G Personnel Report P-2023-19 12-12-23
CONTACT: HUMAN RESOURCES
PERS RPT P-2023-19 12-12-23.pdf
Classification and Compensation Plan- Effective Dec 12 2023.pdf
Recreation Instructor Job Description.pdf
Deputy City Manager Job Description.pdf

8.H SECOND READING AND ADOPTION OF ORDINANCE NO. 1859 , Amending Section 2.66.090 (Compensation) of Chapter 2.66 (Gardena Economic Business Advisory Commission) and Section 2.68.110 (Compensation) of Chapter 2.68 (Gardena Beautification Commission) of Title 2 (Administration and Personnel) of the Gardena Municipal Code
CONTACT: CITY MANAGER
ORDINANCE No. 1859.rtf.pdf

8.I Acceptance and Notice of Completion for the Traffic Detour and Temporary Pavement for UPRR Improvements Phase of the Artesia Boulevard Arterial Improvement Project from Western Avenue to Vermont Avenue, JN 935.
CONTACT: PUBLIC WORKS
NOC__UPRRRehabPavingPH1_JN935.pdf

8.J Approve Purchase of Mobile Bus Chargers for $157,914 and Authorize a Program Total of $173,705
CONTACT: TRANSPORTATION
Gardena, CA (Heliox, 50kW, 120123RZ2).pdf
Heliox Mobile 50 UL Leaflet - Digital.pdf
Commonwealth of Virginia Letter to GTrans.pdf

9. **EXCLUDED CONSENT CALENDAR**

10. **PLANNING & ENVIRONMENTAL QUALITY COMMISSION ACTION SHEET**

10.A November 21, 2023 - ***Meeting Cancelled***
2023_11_21 PC CANCELLATION_signed.pdf

10.B DECEMBER 5, 2023 MEETING
GENERAL PLAN CONFORMITY #2-23
General Plan Conformity Determination for the Purchase of Two Parcels Totaling Approximately 19,200 sf Located at 1112 W. Gardena Blvd. (APNs: 6111-004-032, 033)

Commission Action: The Planning Commission approved Resolution No. PC #21-23, by a vote of 5-0, setting forth the Commission's General Plan conformity report in accordance with Government Code section 6540.2.

City Council Action: No action is needed.

10.C DECEMBER 5, 2023 MEETING

GENERAL PAN CONFORMITY #3-23

General Plan Conformity Determination for the Purchase of a Parcel Totaling Approximately 5,500 sf Located at 15016 Nader Place, also known as 15016 Daphne Ave (APN: 4064-023-024)

Commission Action: The Planning Commission adopted Resolution No. PC 22-23, by a vote of 5-0, setting forth the Commission's General Plan conformity report in accordance with Government Code section 6540.2.

City Council Action: No action is needed.

To view the complete Planning Commission packet **CLICK HERE**.
2023_12_05 PCAX.pdf

11. **ORAL COMMUNICATIONS (LIMITED TO A 30-MINUTE PERIOD)**

Oral Communications by the public will be heard for one-half hour at or before 8:30 p.m. or at the conclusion of the last agenda item commenced prior to 8:30 p.m. Oral Communications not concluded at that time shall be resumed at the end of the meeting after Council Reports. Speakers are to limit their remarks to three minutes, unless extended by the Mayor. An amber light will appear to alert the speaker when two minutes are complete, and a red light will appear when three minutes are over. Your cooperation is appreciated.

11.A **PUBLIC COMMENT**
PC #1 - Under Oral Communication.pdf

12. **DEPARTMENTAL ITEMS - ADMINISTRATIVE SERVICES**

12.A Approve Citywide Classification and Total Compensation Study Contract with Gallagher Benefit Services, Incorporated (Doing Business as Koff & Associates) in the amount of $205,940 and a project total of $236,831

Staff Recommendation: Approve Proposal
12-12-23-Gallagher Benefit Services Inc- Contract Agreement.pdf

12.B City of Gardena Audit Reports for Fiscal Year Ended June 30, 2023; Annual Comprehensive Financial Report (ACFR), Family Child Care and GTrans

Staff Recommendation: Receive and File Audit Reports for Fiscal Year 2022-2023
Attachment #1 - Annual Comprehensive Financial Report June 30, 2023.pdf
Attachment #2 - Child Care Program Report June 30, 2023.pdf
Attachment #3 - GTrans Report June 30, 2023.pdf

12.C Approve contracts with AT&T Business and AT&T Corp (AT&T Consulting) for the purchase of Voice Over Internet Protocol (VOIP) services and AT&T Consulting Services for an estimated total of $30,213 for the period January 1, 2024 through June 30, 2025

S**taff Recommendation: Approve Purchase and Contract**

12-12-23-City of Gardena IP Flex proposal.pdf
12-12-23-AT& T Consulting Proposal.pdf

13. **DEPARTMENTAL ITEMS - COMMUNITY DEVELOPMENT**

13.A INTRODUCTION OF ORDINANCE NO. 1863, Making minor amendments to Ordinance No. 1851 which adopted by reference the 2022 Edition of the California Building Standards Code relating to fence permits and rodent-proofing, amending Section 18.42.070.f of the Gardena Municipal Code and finding the action is exempt from the California Environmental Quality Act pursuant to the Common Sense Exemption of CEQA Guidelines Section 15061(b)(3)

Staff Recommendation: Introduce Ordinance No. 1863 and set a public hearing on the adoption for the meeting of January 9, 2024.
Staff Report - 2022 Building Code Adoption.pdf
Ordinance No. 1863.pdf
Resolution No. 6649.pdf

13.B INTRODUCTION OF ORDINANCE NO. 1860, Repealing and readopting Chapter 18.43 of the Gardena Municipal Code relating to Density Bonus laws and finding the Ordinance to be exempt pursuant to the common sense exemption of CEQA Guidelines Section 15061(b)(3)

Staff Recommendation: Conduct a Public Hearing and Introduce Ordinance No. 1860
Staff Report - Ordinance No. 1860.pdf
PC Resolution No. PC 19-23.pdf
Ordinance No. 1860.pdf

14. **DEPARTMENTAL ITEMS - ELECTED & CITY MANAGER'S OFFICES**

14.A INTRODUCTION OF ORDINANCE NO. 1861, Amending Section 2.60.100 (Open Market Procedure) of Chapter 2.60 (Purchasing System) of Title 2 (Administration and Personnel) of the Gardena Municipal Code

Staff Recommendation: Introduce Ordinance No. 1861, and Adopt the Ordinance at the next City Council meeting on January 9, 2024.
ORDINANCE No. 1861.rtf.pdf

14.B INTRODUCTION OF ORDINANCE NO. 1862, Amending Section 3.24.020 (Delegation of claims authority to city manager) of Chapter 3.24 (Claims and Demands Against the City) of Title 3 (Revenue and Finance) of the Gardena Municipal Code

Staff Recommendation: Introduce Ordinance No. 1862, and Adopt the Ordinance at the next City Council meeting on January 9, 2024.
ORDINANCE No. 1862.rtf.pdf

14.C INTRODUCTION OF ORDINANCE NO. 1864, Amending Section 2.04.170 of the Gardena Municipal Code Setting the Compensation of the Mayor and Members of the City Council as Authorized by Senate Bill 329

Staff Recommendation: Introduce Ordinance Number 1864 and Adopt the Ordinance at the next City Council meeting on January 9, 2024.
ORDINANCE No. 1864.pdf

15. **DEPARTMENTAL ITEMS - POLICE**

15.A Authorization to Purchase Seven (7) Patrol Vehicles from National Auto Fleet Group in the Amount of $367,104 and Expend Build-Out Costs in the Amount of $199,127 for a total of $566,231

Staff Recommendation: Authorize Purchase and Build-Out Costs
Agenda Staff Report.pdf
National Auto Fleet.pdf
SBRPCA Quote.pdf

16. **DEPARTMENTAL ITEMS - PUBLIC WORKS**

16.A Award Construction Contract for the Gardena Community Aquatic and Senior Center Project, JN 978, to New Dynasty Construction Company, in the amount of $16,870,644. Additionally Approve the Project Plans & Specifications, $34,675 Additional Services Agreement with RJM Design Group, $195,340 Additional Services Agreement with Griffin Structures, 10% of Project Contingency, and Budget Appropriation of $6,206,867 from General Fund Reserve.

Staff Recommendations:
- **Award Construction Contract**
- **Approve Project Plans & Specifications**
- **Approve Additional Design Services**
- **Approve Additional Construction Administration Services**
- **Approve Project Contingency**
- **Approve Additional Budget Appropriation**

JN 978 Aquatic & Senior Center CD Plans.pdf
JN 978 Aquatic & Senior Center Specifications.pdf
JN 978 - New Dynasty Construction Co Proposal. 11-21-2023.pdf
JN 978 Gardena Aquatic-Senior Ctr_Additional RJM Design Services.pdf
JN 978 Gardena Aquatic & Senior Center_Additional GS Services.pdf

16.B Award Construction Contract for the Storm Drain Debris Screen FY 2020/2021 and 2021/2022 Project, JN 998 and 999, to United Strom Water, Inc. in the amount of $243,793.00. Additionally, Approve the Project Plans & Specifications, $8,784 Construction Support Services Contract with Cannon, 10% of Project Contingency and Declare California Environmental Quality Act (CEQA) Exemption.

Staff Recommendations:

- **Award Construction Contract**
- **Approve Project Plans and Specifications**
- **Approve Construction Support Services**
- **Approve Project Contingency**
- **Declare CEQA Exemption**

Bid Documents.pdf
Plans and Specifications.pdf
Notice of Exemption.pdf
Construction Support Services - Cannon.pdf

17. **DEPARTMENTAL ITEMS - RECREATION & HUMAN SERVICES**

18. **DEPARTMENTAL ITEMS - TRANSPORTATION**

18.A Approve Microtransit Pilot Service Concept

Staff Recommendation: Approve Pilot
Approve Microtransit Pilot Staff Report 12_12_2023.pdf
Attachment - Booking Application Examples.pdf

18.B Approve Purchase of Two Electric Microtransit Vans for a Total of $301,904 and a Program Total of $332,094

Staff Recommendation: Approve Purchase
Model1 Quote - Class Z Electric Vans (CalACT Quote - GTrans).pdf
CALACT Letter of Assignment 20-01.pdf
ETransit Gamechanger Demo Photos 12_12_2023.pdf

19. **COUNCIL ITEMS**

20. **COUNCIL DIRECTIVES**

21. **CITY MANAGER REMARKS RE: DIRECTIVES / COUNCIL ITEMS**

22. **COUNCIL REMARKS**

1. COUNCIL MEMBER TANAKA
2. COUNCIL MEMBER LOVE
3. MAYOR PRO TEM HENDERSON
4. MAYOR CERDA
5. COUNCIL MEMBER FRANCIS

23. **ANNOUNCEMENT(S)**

24. **REMEMBRANCES**

25. **ADJOURNMENT**

The Gardena City Council will adjourn to the Closed Session portion of the City Council Meeting at 7:00 p.m. followed by the Regular City Council Meeting at 7:30 p.m. on Tuesday, December 26, 2023.

I hereby certify under penalty of perjury under the laws of the State of California that the foregoing agenda was posted in the City Hall lobby not less than 72 hours prior to the meeting. A copy of said Agenda is available on our website at www.CityofGardena.org.

Dated this 8th day of December, 2023

/s/ MINA SEMENZA
MINA SEMENZA, City Clerk

Law Office of Kim Savage

2625 Alcatraz Ave., Suite 331
Berkeley, California 94705

Berkeley (510) 984-0464
www.kimsavagelaw.com

November 13, 2023

Carmen Vasquez, City Attorney
Lisa E. Kranitz, Assistant City Attorney
City of Gardena
1031 Avenue C
Redondo Beach, California 90277

Email: lkranitzlaw@gmail.com
Email: cv@jones-mayer.com

Re: Request for Fair Housing Reasonable Accommodation – Municipal Code § 18.74 et seq.
Subject Property - 1921 146th Street, Gardena, California

Dear Ms. Vasquez and Ms. Kranitz:

This office represents Mr. Michael E. Joly, CEO, Clear Recovery Center, Inc., in the planning approval process for the proposed development at 1921 146th Street in the City of Gardena. More specifically, this letter is a request for a fair housing reasonable accommodation pursuant to City of Gardena Municipal Code § 18.74 et seq., to permit in the R-3 zone the proposed use for housing for individuals with disabilities currently in recovery for substance use and abuse. The fair housing reasonable accommodation would waive Section 18.16.010 which requires that a § 18.04 "group care facility" be subject to a conditional use permit to operate in medium density residential zone.

Proposed Development - Housing for Individuals With Disabilities Currently In Recovery

Clear Recovery Center, Inc. (CRC), an experienced substance abuse and mental health treatment provider, proposes to develop a California Department of Health Care Services (DHCS) licensed non-medical alcohol and drug treatment program for 20 adults who have voluntarily chosen to address their substance use and abuse. The subject parcel, identified as 1921 146th Street, will provide residential treatment within four dwelling units, each with a separate address. Two new units, each with a six-person occupancy, will acquire the addresses of 1925 and 1927 146th Street. The new 1923 A and 1923 B 146th Street dwellings will each have a four-person occupancy. The fifth dwelling unit, 1921 146th Street, will be used for individual and group sessions only for residents of the facility. The 12, 541 sq. ft. parcel is located in the R-3 multi-family zone and surrounded by large apartment and condominium developments. The City of Gardena has approved the construction plans for development including the provision of seven parking spaces which will accommodate staff vehicles. Residents are not permitted to have a vehicle at the facility. We are providing a rendering of the parcel development, not previously submitted, which we believe enhances an understanding of how the DHCS licensed facility will be integrated within the residential block.

Federal and State Fair Housing Law Reasonable Accommodation Mandate

Under both the federal Fair Housing Amendments Act of 1988 and California's Fair Employment and Housing Act, local governments have an affirmative duty to provide reasonable accommodations in land use and zoning regulations, policies, practices and procedures where it may be necessary to provide individuals with disabilities equal opportunity in housing. Fair Housing Amendments Act, 42 U.S.C. § 3604(f)(3)(B); California Fair Employment and Housing Act, Cal. Gov't. Code §12927(c)(1). Developers and providers of housing for individuals

with disabilities may seek from local government flexibility in the application of land use and zoning regulations or waiver of certain restrictions or requirements because they are necessary to achieve equal access to housing. Turning Point, Inc. v. Caldwell, 74 F.3d 941 (9th Cir. 1996).

California has long recognized that local land use and zoning restrictions have impeded the development of housing for individuals with disabilities, whether motivated by discriminatory intent or unintentional but, with a resulting disparate impact. Our state has a strong commitment to furthering housing opportunities for individuals with disabilities through fair housing reasonable accommodation processes. California Attorney General, Bill Lockyer, in a letter to all California cities and counties, cautioned against using the conditional use permit process when reviewing land use and zoning matters related to housing for individuals with disabilities because this entitlement process relies on the wrong legal standard. In contrast to a "general welfare standard" (the conditional use permit standard), a fair housing reasonable accommodation analysis correctly evaluates the need for a regulatory or procedural exception to overcome barriers to housing opportunities for individuals with disabilities. Equally important, the Attorney General advised against entitlement public notice and hearing processes in decision-making related to housing for individuals with disabilities because all too frequently it leads to unfounded community opposition, potentially discriminatory decision-making and liability for fair housing violations. Letter of Attorney General Bill Lockyer (May 15, 2001), available at www.hcd.ca.gov.

Subsequent to the Attorney General's statewide letter strongly urging the adoption of reasonable accommodation procedures for land use and zoning determinations, the State of California, effective 2002, has required that local government identify constraints to the development of housing for individuals with disabilities and adopt fair housing reasonable accommodation procedures. Gov't Code §§ 65583(a)(4) and 65583(c)(3). Municipalities' fair housing reasonable accommodation procedures provide, specifically for housing for individuals with disabilities, a separate procedure and analysis distinguishable from land use and zoning entitlement approval processes.

The California Civil Rights Department (CRD) (formerly the Department of Fair Employment & Housing) has adopted regulations identifying public and private land use and zoning practices that either intentionally discriminate or unintentionally have the effect of discriminating against housing for individuals with disabilities. 2 CCR §§ 12161 and 12162. The regulations pointedly address the legal obligation of cities and counties to use a fair housing reasonable accommodation procedure in land use decision-making for housing for individuals with disabilities, not other entitlement processes which typically rely on a "general welfare standard." This civil rights enforcement department through its regulations further clarifies California's commitment to using a reasonable accommodation decision-making process that considers increasing housing opportunities for individuals with disabilities. An illegal decision-making practice is one that:

> Refuses or fails to make reasonable accommodations in public or private land use practices or services related to the enjoyment of residence, land ownership, tenancy, or any other land use benefit related to residential use, or in connection with residential real estate or existing or proposed dwellings, including charging a fee for seeking or processing a reasonable or other accommodation, or using land use permitting processes for variances, conditional use permits, land use approvals rather than a reasonable accommodation process to respond to a request for a reasonable accommodation if the variance or conditional use process takes into consideration different criteria or uses different procedures than those required by this article for considering requests for a reasonable accommodation;
>
> 2 CCR 12161(b)(8) (emphasis added).

The fair housing reasonable accommodation mandate is interpreted broadly in land use and zoning decision-making and encompasses flexibility in use and occupancy deviations for furthering housing opportunities. See Joint Statement of the Department of Housing & Urban Development and the Department of Justice, *State and Local Land Use Laws and Practices and the Application of The Fair Housing Act* (November 10, 2016). There is no categorical list of permitted or unpermitted fair housing reasonable accommodations as each request is a highly fact specific inquiry and decided on a "case-by-case" basis. Mengistu v. Housing Authority of the City of Los Angeles, 742 Fed. Appx. 247 (9th Cir. 2018). A jurisdiction may not pre-determine what exceptions are permissible.

The Clear Recovery Center Fair Housing Reasonable Accommodation Request, Gardena Municipal Code, Section 18.74 et seq.

The specific request is to permit Clear Recovery Center, Inc. to provide a California DHCS Alcohol and Drug Treatment Program for up to 20 adults with disabilities currently in recovery for substance use and abuse at 1921 146th Street, Garden Grove, California. CRC requests that the City waive Section 18.16.010 which requires that a § 18.04 "group care facility" be subject to a conditional use permit to operate in medium density residential zone. The City should authorize the requested use as a fair housing reasonable accommodation in lieu of a conditional use permit review and approval process.

This request for a fair housing reasonable accommodation is analyzed in accordance with the findings required under Section 18.74.070.

1. That the housing, which is the subject of the request for reasonable accommodation, will be used by people with disabilities protected under fair housing laws:

Individuals currently in recovery for substance abuse are within the statutory definition of "disability" and protected from discrimination under federal and state fair housing laws. Pacific Shores Properties, LLC v. City of Newport Beach, 730 F. 3d 1142 (9th Cir. 2013), cert. denied, 135 S Ct. 436 (2014); Hernandez v. Hughes Missile Sys. Co., 298 F. 3d 1030 (9th Cir. 2002); Schwarz v. City of Treasure Island, 521 F. Supp. 2d 1307 (2007). The proposed CRC facility will be licensed by DHCS for an adult residential alcohol and drug treatment program.

> (a) As used in this chapter, "alcoholism or drug abuse recovery or treatment facility" or "facility" means any premises, place, or building that provides residential nonmedical services to adults who are recovering from problems related to alcohol, drug, or alcohol and drug misuse or abuse, and who need alcohol, drug, or alcohol and drug recovery treatment or detoxification services.
>
> California Health & Safety § 11834.02.

There should be no dispute that CRC's proposed DHCS licensed Alcohol and Drug Recovery Facility is housing specifically for individuals with disabilities within the fair housing law protections. The federal and state civil rights statutes also extend protections to prospective residents who are currently in recovery and Mr. Joly as a provider of housing for individuals with disabilities. Judy B. v. Borough of Tioga, 889 F. Supp. 792 (M.D. Pa 1995) and Epicenter of Steubenville v. City of Steubenville, 924 F. Supp. 845 (S.D. Ohio 1996).

2. That the accommodation is necessary to afford people with disabilities an equal opportunity to use and enjoy the dwelling:

The requested fair housing reasonable accommodation will provide a high-quality residential treatment opportunity for 20 adults with disabilities who would not otherwise have an opportunity to address their addiction in this type of residential setting, an environment which has consistently proven effective in addressing substance abuse disorders and co-occurring disorders. City of Edmonds v. Wash. State Bldg. Code Council, 18 F.3d 802 (9th Cir. 1994); Oconomowoc Residential Programs, Inc. v. City of Milwaukee, 300 F.3d 775 (7th Cir. 2002). Nationwide, substance abuse is at epidemic proportions and the need for a wide range of treatment and recovery models, including state licensed residential rehabilitation facilities, far outweighs the availability. In California, approximately 2.9 million Californians (9%) age 12 and older had a substance use disorder in 2022. Six percent reported symptoms that met the criteria for abuse of or dependence on alcohol, and about 4% reported meeting criteria for abuse of or dependence on illicit drugs. *Substance Use In California, 2022: Prevalence and Treatment*, California Health Care Foundation, www.chcf.org. In 2019, there were only 1797 licensed residential (nonhospital) facilities statewide with only 717 providing detoxification from multiple drugs. Only 58% of the licensed facilities were providing services to individuals with co-occurring disorders. www.samhsa.org.

The City of Gardena, like other California cities, is facing an ever-increasing challenge in address substance use and abuse. In 2020, Gardena had an estimated 13.6 opioid overdose deaths per 100,000 population. An estimated 14.3% of adults reported frequent mental distress in 2020 and a similar rate of Gardena adults, 14.5%, were estimated to have engaged in binge drinking in 2020. Substance use and abuse cases continue to rise annually. See, Cityhealthdashboard.com. There are few opportunities for licensed alcohol and drug treatment within Gardena despite the pressing need. According to the DHCS most recent data, only one other nearby provider operates a licensed residential treatment facility with detox services within close proximity to Gardena, providing little opportunity for individuals with disabilities in recovery to access treatment within their community, close to family, friends, work and school.

A closer examination of alcoholism rates within the City of Gardena further substantiates the need for residential treatment to address this disease which has far-reaching damaging consequences. The County of Los Angeles Department of Public Health, as part of its study, has compiled city-by-city data on alcohol access and the related consequences of alcohol use and abuse. The City of Gardena has a high number of both on-site (restaurants and bars) and off-site (store sales in sealed containers) alcohol outlets and reports a trend of increasing density of on-site alcohol outlets annually. In 2020, the most recent available data, Gardena had 16.1 on-site alcohol outlets for every 10,000 persons and 7.7 off-site alcohol outlets for every 10,000 persons. Alcohol-related consequences are classified as high for the City of Gardena: 43.4 violent crimes; 4.5 vehicle crashes; 61.8 emergency hospital visits; 48 hospitalizations and 2.7 death per every 10,000 persons within the City. While substance use and abuse and the number of alcohol outlets increases annually, access to residential treatment for substance abuse has fallen far short of the need. The Department of Public Health's recommendations to address alcoholism, with its wide-ranging adverse societal and economic impacts, includes increasing access to substance abuse disorder treatment services. *Alcohol Outlet Density and Consequences by City and Community in Los Angeles County, 2020,* Los Angeles County Department of Public Health (December 2022).

The City's zone code requirement of a conditional use permit for any "group care facility" in an R-3 zone is a deterrent to developing much-needed State licensed residential facilities for those in recovery for substance use and abuse. "It is equally well established that zoning practices that discriminate against disabled individuals can be discriminatory, and therefore violate § 3406 if they contribute to "mak[ing] unavailable or deny[ing]" housing to those persons. Pacific Shores Properties, LLC v. City of Newport Beach, 730 F. 3d 1142 (9th Cir. 2013) (emphasis added.) Likewise, Title II of the Americans With Disabilities Act prohibits local governments from discriminating against individuals with disabilities currently in recovery through zoning.

Bay Area Addiction Research & Treatment, Inc. v. City of Antioch, 179 F.3d 725 (9th Cir.1999). Multi-family apartment buildings within the R-3 zone with potentially significant density are not required to secure approval through a conditional use permit process. In contrast, State licensed facilities with seven or more residents, including CRC's proposed use, are subject to a costly and lengthy public notice and hearing process. Further, as noted earlier, the California's CRD requires use of a fair housing reasonable accommodation procedure when housing for individuals with disabilities is the subject of the request for deviation from a local zoning rule.

Clear Recovery Center has established the need for the proposed Gardena treatment facility for individuals with disabilities currently in recovery and the City should grant the requested fair housing reasonable accommodation. CRC will also confirm that granting the accommodation will not impose any burden on the City.

3. That the requested accommodation will not require a fundamental alteration to zoning laws, rules, policies, practices and procedures:

Once a housing provider establishes protection under the law and that the requested accommodation is necessary, as CRC has confirmed, then the accommodation must be provided unless the local government presents persuasive evidence that doing so would "fundamentally alter" the zoning code or result in an undue financial or administrative burden for the jurisdiction. In the land use and zoning context, "fundamental alteration" means an alteration so far-reaching that it would change the essential zoning scheme of a municipality. The courts have generally held that the granting of a single exception in furtherance of housing for individuals with disabilities does not change the residential character of a neighborhood and therefore does not result in a fundamental alteration in the nature of the program. Smith & Lee Assocs. v. City of Taylor, supra,; Martin v. Constance, 843 F. Supp. 1321 (E.D. Mo. 1994); Oxford House v. Babylon, 819 F. Supp. 1179 (E.D.N.Y. 1993).

The subject parcel, 1921 146th Street, is located in the R-3 multi-family residential which has nearby large-scale apartment complexes and condominiums. CRC's property permits five dwelling units and the development rendering reflects careful consideration of neighborhood scale. While aesthetics is not a permissible factor of consideration in reasonable accommodation determinations, CRC's proposal offers the City a beautiful and unobtrusive development which will update and elevate the current block. The proposed 20-person State licensed residential treatment program is an appropriate and compatible density within the R-3 medium density residential zone and will not fundamentally alter the City's zoning code.

4. That the requested accommodation will not impose an undue financial or administrative burden on the city.

As for "undue financial or administrative burden," Mr. Joly's request, like many others in the land use and zoning context, seeks waiver of a regulation. It costs a jurisdiction nothing to waive a rule, meaning that " . . . the accommodation amounts to nothing more than a request for non-enforcement of a rule." Geibeler v. M&B Assocs., 343 F. 3d 1143 (9th Cir. 2003); Proviso Ass'n v. City of Westchester, 914 F.Supp.1555 (N.D. Ill.1996). See also, Joint Statement of The Department of Housing and Urban Development and The Department of Justice, *State and Local Land Use Laws and Practices and The Application of the Fair Housing Act* (November 2016), pp. 14-15. In this instance, the City of Gardena cannot demonstrate that granting the requested accommodation would result in an undue financial or administrative burden.

While some jurisdictions are concerned that granting a fair housing reasonable accommodation will "open the floodgates," this assertion has been rejected as every request for an accommodation is considered on a case-by-case basis and is fact specific. Schwarz v. City of Treasure Island, 544 F.3d 1201 (11th Cir. 2008). Mr. Joly's proposed treatment facility development offers a creative use of a parcel with compatible dwellings within the R-3 zone.

We look forward to discussions with the City for moving this important development forward, one which will certainly evidence the City of Gardena affirmatively furthering housing opportunities for individuals with disabilities. Mr. Joly and CRC will need to submit to the DHCS for licensure a written confirmation of the City's granting the requested fair housing reasonable accommodation. Thank you in advance for your consideration.

Sincerely,

Kim Savage

Kim Savage
Attorney At Law

cc: Greg Tsujiuchi, Planning Director, City of Gardena (gtsujiuchi@cityofgardena.org)

MINUTES
Regular Meeting of the
Gardena City Council
Tuesday, November 14, 2023

The Regular Meeting Notice and Agenda of the Gardena City Council of the City of Gardena, California, was called to order at 7:03 PM on Tuesday, November 14, 2023, in the Council Chamber at City Hall 1700 West 162nd Street, Gardena, California; Mayor Tasha Cerda presiding.

1. ROLL CALL

Present: Mayor Tasha Cerda; Mayor Pro Tem Mark E. Henderson; Council Member Rodney G. Tanaka; Council Member Paulette C. Francis and Council Member Wanda Love; Other City Officials and Employees present: City Manager Clint Osorio; City Attorney Carmen Vasquez; City Treasurer Guy H. Mato; City Clerk Mina Semenza; and Deputy City Clerk Becky Romero.

PUBLIC COMMENT ON CLOSED SESSION - *None*

2. CLOSED SESSION

2.A CONFERENCE WITH LEGAL COUNSEL-EXISTING LITIGATION Gov. Code Section 54956.9(d)(1)
Zoila Monroy, Aragon; Genesis Dubon; and Kelly Dubon v. City of Gardena, et al. L.A. Sup. Ct. Case No.: 20STCV46821

2.B CONFERENCE WITH REAL PROPERTY NEGOTIATORS Government Code Section 54956.8
Property: 1112 W. Gardena Blvd., Gardena, CA 90247; APN: 6111-004-032, 6111-004-033
Agency Negotiator: Clint Osorio, City Manager and Greg S. Tsujiuchi, Director of Community Development
Negotiating Parties: Shar P & J Family Trust represented by Darryll Hamilton, Thompson Team Real Estate
Under Negotiation: Price and Terms of Payment

2.C CONFERENCE WITH REAL PROPERTY NEGOTIATORS Government Code Section 54956.8
Property: 15106 Nader Place/15106 Daphne Ave, Gardena, CA; APN: 4064-023-024
Agency Negotiator: Clint Osorio, City Manager and Greg S. Tsujiuchi, Director of Community Development
Under Negotiation: Price and Terms of Payment
Negotiating Parties: Saturo Toga and Eiko Onagi represented by: Bryant Hoover, Thompson Team Real Estate.

Attorney Lou Dumont of Carpenter, Rothans & Dumont LLP was present for Closed Session, Item 2.A. Greg Tsujiuchi and Jackie Choi were present for Closed Session Items 2.B and 2.C.

CITY ATTORNEY REPORT OUT OF CLOSED SESSION

Mayor Cerda reconvened the meeting to the Regular Open Session at 8:00 p.m., and the City Clerk noted the return of all Council Members, who were present at the meeting. When City Attorney Vasquez was asked if there was any reportable action from Closed Session, she stated the City Council met with regards to Closed Session Items 2.A, 2.B, 2.C, staff was provided with direction, but no reportable action was taken.

3. PLEDGE OF ALLEGIANCE

Cinnamyn Earles and Isabella Figueroa led the Pledge of Allegiance. Cinnamyn is in the 8th grade, Isabella is in the 7th grade, and they both attend Robert E. Peary Middle School. Cinnamyn is ASB President and enjoys reading, shopping, and listening to music and her favorite subject in school is English. Isabella is ASB Vice President and enjoys softball, cooking, and baking and her favorite subject is Math. They both introduced their parents.

4. INVOCATION

Pastor Cherie Moore of Restoration Church, gave the Invocation.

5. PRESENTATIONS

5.A Legislative Update – ***Senator Steven Bradford, representing the 35th District, gave legislative updates on this year's budget progress and his budget accomplishments.***

Council Members Francis and Love thanked Senator Bradford for all his contributions to the City of Gardena and his hard work.

Mayor Cerda thanked Senator Bradford for the updates.

5.B Certificate of Recognition to South Bay Environmental Services Center (SBESC) Volunteer, Maria Fonseca, who has contributed 130 hours of cumulative service, overseen by the South Bay Cities Council of Governments (SBCCOG) – ***was accepted by Maria Fonseca***

Council Member Tanaka expressed his appreciation for Ms. Fonseca.

Ms. Fonseca thanked all Members of the City Council, her family, and SBCCOG members for all their support.

5.C Gardena Events Video Presentation

6. PROCLAMATIONS

6.A "2023 Small Business Saturday, November 25, 2023" – ***was proclaimed by Mayor Cerda***

7. APPOINTMENTS – *No Appointments were made*

8. CONSENT CALENDAR

8.A Waiver of Reading in Full of All Ordinances Listed on this Agenda and that they be Read by Title Only
CONTACT: CITY CLERK

8.B Approve Minutes:
Amended Regular Meeting of the City Council, October 10, 2023
Study Session of the City Council, October 24, 2023
Regular Meeting of the City Council, October 24, 2023
CONTACT: CITY CLERK

8.C Receive and File of Minutes:
Planning and Environmental Quality Commission, August 15, 2023
CONTACT: COMMUNITY DEVELOPMENT

8.D Approval of Warrants/Payroll Register, November 14, 2023
CONTACT: CITY TREASURER

November 14, 2023: Wire Transfer: 12567-12585; Check Numbers: 173888-174092 for a total Warrants issued in the amount of $4,021,417.43; Total Payroll Issued for November 3, 2023: $1,831,558.13.

8.E Personnel Report P-2023-18 11-14-23
CONTACT: HUMAN RESOURCES

8.F RESOLUTION NO. 6648, Amending the List of Authorized Games and Authorizing the Play of Certain Games in Licensed Card Clubs
CONTACT: CITY MANAGER

RESOLUTION NO. 6648

A RESOLUTION OF THE CITY COUNCIL OF THE CITY OF GARDENA, CALIFORNIA, AMENDING THE LIST OF AUTHORIZED GAMES AND AUTHORIZING THE PLAY OF CERTAIN GAMES IN LICENSED CARD CLUBS

8.G RESOLUTION NO. 6647, Approving the Acceptance and Award from the State of California Department of Alcoholic Beverage Control's ABC-OTS Grant in the Amount of $40,000.00
CONTACT: POLICE

RESOLUTION NO. 6647

A RESOLUTION OF THE CITY COUNCIL OF THE CITY OF GARDENA, CALIFORNIA, APPROVING THE ACCEPTANCE AND AWARD FROM THE STATE OF CALIFORNIA DEPARTMENT OF ALCOHOLIC BEVERAGE CONTROL'S ABC-OTS GRANT IN THE AMOUNT OF $40,000.00

8.H Acceptance and Notice of Completion for the Pedestrian Safety Improvement FY 2022-2023 Project (Phase 2), JN 513
CONTACT: PUBLIC WORKS

8.I Acceptance and Notice of Completion for the Vermont Avenue Street Improvements from Artesia Boulevard to Gardena Boulevard project, JN 959
CONTACT: PUBLIC WORKS

8.J Approve Seven Month Tire Lease Contract Extension with Michelin North America, Inc. at a cost of $62,000
CONTACT: TRANSPORTATION

It was moved by Council Member Francis, seconded by Mayor Pro Tem Henderson, and carried by the following roll call vote to Approve the Consent Calendar with the exceptions of Items 8.F, 8.G and 8.J:

Ayes: Council Member Francis, Mayor Pro Tem Henderson, Council Members Tanaka and Love, and Mayor Cerda
Noes: None
Absent: None

9. EXCLUDED CONSENT CALENDAR

8.F CITY MANAGER - RESOLUTION NO. 6648, Amending the List of Authorized Games and Authorizing the Play of Certain Games in Licensed Card Clubs – ***Item pulled by Council Member Francis***

Questions and comments were made by Council Member Francis regarding if Council is responsible for authorizing each time there is a new game added or a game change.

City Manager Osorio and City Attorney Vasquez explained the process and answered all questions.

It was moved by Council Member Francis, seconded by Mayor Cerda, and carried by the following roll call vote to Approve Item 8.F:

Ayes: Council Member Francis, Mayor Cerda, Mayor Pro Tem Henderson, and Council Members Tanaka and Love
Noes: None
Absent: None

8.G POLICE - RESOLUTION NO. 6647, Approving the Acceptance and Award from the State of California Department of Alcoholic Beverage Control's ABC-OTS Grant in the Amount of $40,000.00 – ***Item pulled by Council Member Francis***

Questions and comments were made by Council Member Francis regarding the components of the grant award.

City Manager Osorio explained in detail what the item consisted of and answered all questions. Chief Saffell was present and answered all questions.

It was moved by Council Member Francis, seconded by Mayor Pro Tem Henderson, and carried by the following roll call vote to Approve Item 8.G:

Ayes: Council Member Francis, Mayor Pro Tem Henderson, Council Members Tanaka and Love, and Mayor Cerda
Noes: None
Absent: None

8.J TRANSPORTATION - Approve Seven Month Tire Lease Contract Extension with Michelin North America, Inc. at a cost of $62,000 – ***Item pulled by Council Member Francis***

Questions and comments were made by Council Member Francis regarding the contract extension.

City Manager Osorio provided some past information about the contract and answered all questions.

It was moved by Council Member Francis, seconded by Mayor Pro Tem Henderson, and carried by the following roll call vote to Approve Item 8.J:

Ayes: Council Member Francis, Mayor Pro Tem Henderson, Council Members Tanaka and Love, and Mayor Cerda
Noes: None
Absent: None

10. PLANNING & ENVIRONMENTAL QUALITY COMMISSION ACTION SHEET

10.A NOVEMBER 7, 2023 MEETING

SECOND REQUEST FOR EXTENSION
The Planning Commission considered a second request for an extension of time for Tentative Parcel Map No. 82410, to subdivide a 17,221 square foot property at 15906-15908 S. Manhattan Place creating two separate parcels in the Low-Density Multiple-Family Residential (R-2) zone.
LOCATION: 15906-15908 S. Manhattan Place
APPLICANT: Nancy Hurt Canady

Commission Action: The Planning Commission approved a second request for an extension of time for Tentative Parcel Map No. 82410 (TM #1-18), by a vote of 4-0, granting an additional 12-month extension.

City Council Action: Receive and file, call for review (by way of two votes).

This Item was Received and Filed

10.B NOVEMBER 7, 2023 MEETING

FIRST MODIFICATION TO CONDITIONAL USE PERMIT #13-17
The Planning Commission reviewed a request for a modification to Conditional Use Permit #13-17, to add to an additional prefabricated storage container to the

property and other site changes for a landscaping contractor's yard and determination that the project qualifies for both a Class 3 and Class 11 categorical exemption, pursuant to the California Environmental Quality Act. LOCATION: 1650 W 130th Street (APN: 6102-006-005)
APPLICANT: Antonio Valenzuela (Mariposa Landscapes Inc)

Commission Action: The Planning Commission approved Resolution No. PC 15-23, by a vote of 4-0, approving Modification to CUP #13-17, and directed staff to file a Notice of Exemption.

City Council Action: Receive and File or Call for review (by way of two votes).

This Item was Received and Filed

10.C NOVEMBER 7, 2023 MEETING

ZONE TEXT AMENDMENT #6-23
The Planning Commission considered a recommendation to the City Council on adoption of Ordinance No. 1860 to repeal and readopt Chapter 18.43 of the Gardena Municipal Code relating to Density Bonus Laws, and finding the Ordinance to be exempt pursuant to the common sense exemption of CEQA Guidelines Section 15061(b)(3).

Commission Action: The Planning Commission approved Resolution No. PC 19-23, by a vote of 4-0, recommending that the City Council adopt Ordinance No. 1860.

City Council Action: Receive and File. This item will be brought forth to the Council for review at a future City Council meeting.

This Item was Received and Filed; it was noted that this Item required No Action by the City Council and would be brought back to the Council for review at a future City Council meeting by way of an Ordinance.

11. ORAL COMMUNICATIONS

1) Irvin Samuel, commented on all the recent improvements and many investments being made to the infrastructure of the community and expressed his concerns about bike riders, pedestrian safety, and damaged sidewalks.
2) Pouya Yousef, expressed his concerns with his new auto body business and the recent business closure by the City. He asked for the City Council's assistance and consideration in this matter. Mayor Cerda thanked Mr. Yousef for bringing it to the Council's attention and that she was familiar with the situation and asked that he speak to our Community Development Director.
3) Brandon Smith verbalized his thoughts on the matter of the Gardena Boulevard Revitalization and gave his recommendations. Mayor Cerda thanked him for the information and asked that he stay tuned and that there is still discussion going on and upcoming meetings moving forward.
4) Travis Hernandez, Interim Manager for the Masao W. Sato Library; he came to announce library events for the Gardena Mayme Dear and the Masao W. Sato Libraries.

11.A **PUBLIC COMMENT**

1) City Clerk Mina Semenza, noted for the record two (2) emails that were received from the public and made part of the packet. She stated that the emails will be received and filed and made part of the record.

12. DEPARTMENTAL ITEMS - ADMINISTRATIVE SERVICES – ***No Items***

13. DEPARTMENTAL ITEMS - COMMUNITY DEVELOPMENT

13.A Continuation of Public Hearing Adoption of Fees Relating to Home Sharing.

City Manager Osorio presented the Staff Report.

Mayor Cerda asked if anyone asked to speak on this item and if the Council had any comments or questions. There were no public speakers.

This Item Required No Action by the City Council. This Item will be brought to the City Council at a future meeting in January.

14. DEPARTMENTAL ITEMS - ELECTED & CITY MANAGER'S OFFICES

14.A Discuss and Consider Changing Council Meeting Start Time

City Manager Osorio presented the Staff Report.

Mayor Cerda asked if anyone asked to speak on this item and if the Council had any comments or questions. There were no public speakers.

Questions and comments were made by all Members of the Council, providing staff with direction, that the Council Meeting Start Time would remain the same.

City Manager Osorio and City Attorney Vasquez provided advice and answered all questions.

This Item Required No Action by the City Council.

14.B Discussion of Amending Section 2.04.170 of the Gardena Municipal Code Pertaining to City Council Compensation in Light of Senate Bill 329

City Manager Osorio presented the Staff Report.

Mayor Cerda asked if anyone asked to speak on this item and if the Council had any comments or questions. There were no public speakers.

Questions and comments were made by all Members of the Council regarding the compensation amount for all Members of the Council. Staff was given direction to amend the City Council Compensation section of the Gardena Municipal Code as follows: 1st: $1,600 max for all Council Members; 2nd: An additional $1, 000 for the Mayor only – it received 4 out of 5 votes.

City Manager Osorio and City Attorney Vasquez advised the Council and answered all questions.

This Item Required No Action by the City Council.

14.C ORDINANCE NO. 1859, Amending Section 2.66.090 (Compensation) of Chapter 2.66 (Gardena Economic Business Advisory Commission) and Section 2.68.110 (Compensation) of Chapter 2.68 (Gardena Beautification Commission) of Title 2 (Administration and Personnel) of the Gardena Municipal Code; and RESOLUTION NO. 6646, Amending Resolution No. 4868 by Adding Subsections (E) and (F) to Section 1 of Said Resolution Relating to the Compensation of Members of the Gardena Economic Business Advisory Commission and Gardena Beautification Commission

ORDINANCE NO. 1859

AN ORDINANCE OF THE CITY COUNCIL OF THE CITY OF GARDENA, CALIFORNIA, AMENDING SECTION 2.66.090 (COMPENSATION) OF CHAPTER 2.66 (GARDENA ECONOMIC BUSINESS ADVISORY COMMISSION) AND SECTION 2.68.110 (COMPENSATION) OF CHAPTER 2.68 (GARDENA BEAUTIFICATION COMMISSION) OF TITLE 2 (ADMINISTRATION AND PERSONNEL) OF THE GARDENA MUNICIPAL CODE

RESOLUTION NO. 6646

A RESOLUTION OF THE CITY COUNCIL OF THE CITY OF GARDENA, CALIFORNIA, AMENDING RESOLUTION NO. 4868 BY ADDING SUBSECTIONS (E) AND (F) TO SECTION 1 OF SAID RESOLUTION RELATING TO THE COMPENSATION OF MEMBERS OF THE GARDENA ECONOMIC BUSINESS ADVISORY COMMISSION AND GARDENA BEAUTIFICATION COMMISSION

City Manager Osorio presented the Staff Report.

Mayor Cerda asked if anyone asked to speak on this item and if the Council had any comments or questions. There were no public speakers.

Comments were made by Council Member Francis and Mayor Pro Tem Henderson.

Ordinance No. 1859 was introduced by Mayor Pro Tem Henderson.

It was moved by Mayor Pro Tem Henderson, seconded by Council Member Tanaka, and carried by the following roll call vote to Introduce Ordinance No. 1859 and Adopt Resolution No. 6646:

Ayes: Mayor Pro Tem Henderson, Council Members Tanaka, Francis, and Love, and Mayor Cerda
Noes: None
Absent: None

15. DEPARTMENTAL ITEMS – POLICE – *No Items*

16. DEPARTMENTAL ITEMS - PUBLIC WORKS

16.A Approve a Construction Contract Change Order to Ruiz Concrete and Paving, Inc., in the amount of $11,062.50 for the Traffic Detour and Temporary Pavement for UPRR Improvements Phase of the Artesia Boulevard Arterial Improvement Project from Western Avenue to Vermont Avenue, JN 935

City Manager Osorio presented the Staff Report.

Mayor Cerda asked if anyone asked to speak on this item and if the Council had any comments or questions. There were no public speakers.

Questions and comments were made by Mayor Pro Tem Henderson and Council Member Francis. City Manager Osorio explained why the item was being brought forth.

It was moved by Council Member Love, seconded by Mayor Pro Tem Henderson, and carried by the following roll call vote to Approved Contract Change Order to Ruiz Concrete and Paving, Inc:

Ayes: Council Member Love, Mayor Pro Tem Henderson, Council Members Tanaka and Francis, and Mayor Cerda
Noes: None
Absent: None

17. DEPARTMENTAL ITEMS - RECREATION & HUMAN SERVICES – *No Items*

18. DEPARTMENTAL ITEMS - TRANSPORTATION

18.A Amend Purchase of Zero-Emission Buses to Include Purchase of Zero-Emission Bus Chargers a Revised Total of $9,134,691, and an Overall Program Total of $10,048,161.

City Manager Osorio presented the Staff Report.

Mayor Cerda asked if anyone asked to speak on this item and if the Council had any comments or questions. There were no public speakers.

Questions were asked by Council Member Francis asking if the infrastructure is already in place.

City Manager Osorio explained the details of the contract amendment and answered all questions.

It was moved by Council Member Tanaka, seconded by Council Member Love, and carried by the following roll call vote to Approve Amendment to Purchase:

Ayes: Council Members Tanaka and Love, Mayor Pro Tem Henderson, Council Member Francis, and Mayor Cerda
Noes: None
Absent: None

18.B Approve Purchase of a Two-Year Service Level Agreement with ABB for Electric Bus Chargers for $65,885 and a Project Total of $72,474

City Manager Osorio presented the Staff Report.

Mayor Cerda asked if anyone asked to speak on this item and if the Council had any comments or questions. There were no public speakers.

Questions were asked by Council Member Francis asking if this agreement is automatically renewable.

City Manager Osorio explained the warranty and answered all questions.

It was moved by Council Member Francis, seconded by Council Member Love, and carried by the following roll call vote to Approve Purchase with ABB:

Ayes: Council Members Francis and Love, Mayor Pro Tem Henderson, Council Member Tanaka, and Mayor Cerda
Noes: None
Absent: None

19. COUNCIL ITEMS – *None*

20. COUNCIL DIRECTIVES

Council Member Francis

1) To provide Council with a long-term reporting of what will be done at the Willows Wetland Preserve in working with Vector Control regarding the mosquitoes, short of total eradication of plant species - ***Mayor Cerda seconded it.***

Purpose: Because City Council are stewards of our parklands; we want to make sure it's well maintained.
Reason: El Nino is coming and there will be a lot more mosquitoes.
Benefit: Raise the quality of life and community safety.

Council Member Love

1) Would like to have Director Rigg look into restriping Normandie Avenue (northbound just before getting to Redondo Beach Blvd.) adjacent to Walgreens - ***Council Member Francis seconded it.***

Purpose: When coming up Normandie (northbound) before getting to Redondo Beach Blvd, the lane needs to be widened where the curb curves to the right
Reason: To make it safer and prevent us from getting wheel alignments on our cars.
Benefit: To make it safe; it is only a matter of time before an accident happens.

21. CITY MANAGER REMARKS RE: DIRECTIVES / COUNCIL ITEMS

City Manager Osorio gave a verbal report of information to follow-up on matters that had been directed or requested by the Mayor and Members of Council. Those items were, as follows:

1) Memo regarding the CDBG Eligible Activities that was prepared by Director Tsujiuchi and staff.
2) Memo regarding the advertising of City Job Openings on other platforms.

City Manager Osorio reminded staff that there will be cake after the meeting in celebration of Council Member Love's birthday. He also wished everyone a Happy Thanksgiving.

22. COUNCIL REMARKS

(1) COUNCIL MEMBER LOVE – Since the last Council Meeting, Councilmember Love attended the Senior Health Fair, iHop Grand Opening, Veteran's Day event, the dedication of the gym floor at Rowley Park, and the Holiday Helping Hands Organization. She commented on how Helping Hands was doing phenomenal work by housing the homeless and going above and beyond to ensure the houses are furnished and the kitchens are full. She wanted to take the time to thank all of those who donated for her birthday sneaker ball, the non-perishable food items to put together, as well as 3-5 days of non-perishable ready to eat food that they are going to distribute to the homeless people that are living in the mobile homes on Redondo Beach Boulevard. On Thanksgiving Day, when they go out to distribute these bags, they are also distributing 200 bags of ready to eat foods, that means any food that does not require a can opener, along with 200 plates of Thanksgiving lunch that were being donated by iHop and they will also get a hygiene kit. All of this is going out on Thanksgiving Day so if anybody would like to come out with them and help serve the homeless on that day, they are more than welcome. They are doing a food drive on Saturday, it is a sneaker ball and that means you get dressed up fancy and put on your tennis shoes and your entrance is some more non-perishable food, so anybody that wants to attend, they can find it on social media.

(2) MAYOR PRO TEM HENDERSON – Attended the Senior Health Fair and the 2023 Eddy Awards and congratulated the City of Long Beach for being business friendly and for all the things they are doing over there. He shared with us that Long Beach is now starting something called Silicone Beach trying to attract technology companies. Attended the iHop ribbon cutting, South Bay Work Investment Board Awards, honoring those that passed through their programs and gained gainful employment coming from different circumstances and remarked that it is always great to see stories of triumph. He conducted his Independent Cities Association Executive Board and reminded everyone that they are going to have their conference in Santa Barbara in February. He thanked our Police Department for being available for presentations and the Chief as well. He said he always likes to highlight the great things we are doing in our city in regard to Public Safety, Community Development, Public Works, and everything. So, any time he gets an opportunity to share what we are doing in the City Clerk's Office or City Manager's Office, he really likes to always take time to highlight some of the great things we do because he doesn't think we talk about the things we do well enough with our peer cities. He

attended the SCAG Community Economic Housing Development Committee and our Regional Council Meeting. He is a Regional Council Member for the South Bay City Council of Governments, which represent Gardena, Hawthorne, and Inglewood. They had some robust discussion there about our regional transportation plan 2020, he thinks they will be doing a presentation to the COG on Thursday, so he'll be there for that as well as Councilmember Tanaka. Also did his SCAG District Evaluation Committee and there was a discussion about the viability of SCAG and the membership and which cities and areas get the votes and how do we push initiatives through which is an ongoing discussion. He wanted to thank the city for giving him the opportunity to be the host of the Veterans event. He said it was a great event and always wants to make sure we congratulate and recognize our veterans for their service, both past and present, and always keep them in our hearts and in our minds. Right after that he went to Rowley Park to see the new gym, commented that it looks lovely, and the pop-up event that occurred with Steph Curry's company. He said it was great, a lot of people were there, free food, and it was good to see laughter in the park. He also had another meeting with some elected officials, and they were talking about their plight as elected officials in their communities, and somebody posed the question, "what makes a good, elected official?", which is a subjective question with a myriad of answers. His answer was, he thinks what makes a good, elected official is that you have your vision, and you work with staff to help you bring your vision to life for the community. He told the group that their goal should always be collaborative and work with staff to get some of these things done because they are paid professionals in their subject matter area so, they need to lean on them and if there are things you don't understand, you definitely then work through that process so you can have your vision for what you think the community needs or wants and include the community in some of those processes. Shared that again, everybody can kind of lead differently and bring their thoughts to life differently, but it is good when you start to work with staff and collaborate so they can help bring your vision to life.

(3) COUNCIL MEMBER FRANCIS – Attended Too Cute to Spook event at Nakaoka Community Center, the Gardena Holly Park Homeowner's Association, Greater Los Angeles Vector Control District, Beautification Commission, and the Homeless Workshop that was hosted by Human Services. She said if you did not get a chance to attend the workshop it was excellently presented. She liked one of the activities where they carried you through a scenario where you have a certain amount of money to show how easy it is to become homeless, which she thinks gave a lot of folks food for thought. Attended the Veterans Day program which was very nice and well done. After that, she ran over to Rowley Park to look at the new Tuff Crowd gym floor, and said it is very nice. She commented on how she was telling Senator Bradford earlier, with the initial 3 million dollars that he's dedicated to the Rowley Park restoration, we might have enough money to complete the whole gym, which would be excellent. She met Brandon Jennings, our hometown fellow who grew up here in Gardena, played at Rowley Park, played at that gym, and he's come back to donate that floor to us, and it was great. She told him how much she appreciated how much he does. He remembered us and came back because a lot of folks go off and do what they do, and they never give back, so she appreciates that he did. She congratulated Guiliano's. She was looking though the LA Times on Sunday and saw they were selected as the best deli in the South Bay or in Los Angeles. Urged people to go by and get themselves a sandwich and tell them congratulations. Wants to wish everybody a Happy Thanksgiving and also wants to remind everyone that November is Native American Heritage Month so, if you have the opportunity to tell the true story about the pilgrims and how that went, to let folks know the role that they

played, and that the reason it was a happy Thanksgiving was because of Native Americans. She wished everyone a Happy Thanksgiving.

(4) MAYOR CERDA – Attended one of the rotary meetings and gave a little bit of an update as far as what's going on in the City of Gardena and they were very appreciative to know all the things that we're doing and all the different events that we have. Later that evening, she attended the Gardena PD Fundraiser, for the upcoming Baker to Vegas run, that was over at Islands. She was happy to be able to donate to help our officers go to that. The next day, she was the keynote speaker for the South Bay Association of Realtors breakfast. She spoke to about 75 members and did a 45-minute presentation about Gardena and why as realtors they should point people in the direction of Gardena. For not only how great our homes are, but some of the additional services we offer all our community including kids, seniors, and even our fur babies event. She said they were very taken aback by all the different things that we have for our community members, and she told them when they're showing houses to direct them to Gardena because our homes are still affordable. She said it was great, plus, she did about a 10 minute or so question and answer afterwards which was a lot of fun. Right after that she attended Fire Station 158's barbeque, that they had next door, where they invited them all to celebrate the reopening of Station 158 since their remodel. On the following weekend she attended the Halloween Scare Zone and there were a lot of people there for that. She wanted to thank not only our Parks and Recreation department, but all our departments that participated because, again, all our departments, whether it's Public Works putting up the barriers and lights, maintenance crews, and police officers, it takes everybody to make these events happen. She also wants to thank a lot of the non-profits that were out there, too. She said she knows often times non-profits usually have a separate event and she tells everybody it's great when you can partner with Gardena because you may not have enough people to work your event at your location, and it's great when you can come here, the kids are already here, and just have an additional booth. She saw a few different non-profits out there doing that, so she just wants to thank them for partnering with us because she thinks it made the event that much greater and grander. On the following Sunday she was the guest speaker for the Gardena Holly Park Methodist Church for their Lady Sunday. She did another 40-minute presentation there to the church speaking on Lady and how that related to the City there. She went to Japan with her colleague, Councilmember Tanaka, City Clerk Mina Semenza, as well as 3 of our Directors and she called it a great trip. She remarked on how she's been to Japan before, but by far this was the best trip yet. They did a lot of things this time around, like visiting their new City Hall. She shared that they have something called a courtesy call, where you go to their City Council Chambers and they have 42 City Council members versus our 5 so, you can imagine what their council meetings are like. They participated in the traditional Mayor to Mayor gift exchange, but they also did some things differently this time because they brought some of their Directors with them. For instance, the Police Chief took advantage of going to their Police Department to see how theirs is running, some of the comparisons and things that are done differently there. She pointed out that some of the female training, Kendo, was really interesting to watch as some of the young ladies were practicing and it was really enlightening. They got a chance to go to their Fire Department and they did a couple fire drills for them. They also had a ladder truck that went up 40 meters high and some of our staff got on there. She got a picture of Director Greg Tsujiuchi going way up high and joked that might be a second career for him. She said it was really scary, but a lot of fun.

They also had earthquake module drills, where you go inside of a fire truck, and it shakes. What she didn't realize about Ichikawa is that they have a lot of earthquakes there which she didn't know. She thought wow, they're leaving California earthquake country to go to Ichikawa which is also earthquake country. They visited a school in which the kids participated in singing songs and networking. A lot of them didn't know English, but with the little they did know, they came up and introduced themselves, asked a question and it was just really neat to be able to talk to them. They had anniversary dinners, where they got a chance to speak with their Council Members. They even got a chance to have a karaoke competition. Just like when they were here before at our dinners, we sang, they sang, and it was a lot of fun really getting to know them better. They took them to see a variety of attractions in Ichikawa. They attended a Citizen's Festival, which is similar to our Heritage Festival, and they're preparing for the 90th anniversary of their city being incorporated, which will be next November. Their festival had lots of people and was like a farmers' market. They had the chance to meet officials from one of their universities and one of the Congress members from Japan. They were able to talk to them and learn the difference of how their Congress works versus ours. They did a sign unveiling showing the bond between our sister city and theirs, were lots of performances were done. They also attended where the factory work was made at a little mini shrine. She thinks the best part was, especially with our directors, was kind of comparing the departments, they got a chance to meet with one of their Community Development Directors and they were showing them things that they were doing as it related to what they're looking at new development with and were able to ask them questions. She was glad our City Clerk was able to go as well and experience some of the same things that they've seen over the years with it. She can't reiterate enough how much of the native food they got to try out and that was a lot of fun. They had such a great group there that was open to trying everything and she knows how much Chief Saffell loved trying all the raw fish they ate. She believes there was a tea ceremony that she missed, about learning the proper way to drink tea. She added that there's a great picture of the Chief in a kimono and a sword in his hand. Not only was it a great trip, but she thinks everybody really benefited from it so much. They had a great time with an amazing group, probably the best group she could ever think of to travel with. Their Mayor and City Council, she thinks had a great time also, in fact, they invited them back next year for their 90th anniversary. She said they would do their best to see if they could go back because as mentioned they had a great time with them. The bond that she thinks us celebrating our 60th year now was really amazing. That was their trip, it took them 11 ½ hours to fly up there and 10 ½ hours to fly back. She's still trying to catch up on her sleep, but it was a good time. Immediately coming back from Japan, she attended a Mayor's round table that was hosted by Mayor Rex Richardson in Long Beach, where they talked about a lot of great things like what Mayors are doing for their cities and maybe some suggestions for some of us that aren't doing some of those items there, so they had a lot of good conversation with that. Later that evening she attended the Eddy Awards with Mayor Pro Tem Henderson. As mentioned earlier, the City of Long Beach won so congratulations to them. The next day she attended the iHop Grand Opening, later that night she attended the SBWIB's 28th Annual Award Ceremonies where there were 3 students recognized from Gardena. The first was Eduardo Santiago who completed his adult program, the second was Jose Sanchez who completed his veteran's program, and the third was Ronald Patterson who completed his prison to employment program. She tells everybody that if they want to work there are opportunities out there, the SBWIB and One Stop, they are available to help people get

retrained to go back to work and it's always great to hear these success stories, of not just people finding jobs, but actual careers that they can take care of their families and just have better lives. This past Saturday she attended the Veteran's Day ceremony as well as the Under Armor event with Brian Jennings. As was said earlier, she thinks it's great that he was open to coming back and doing something here in Gardena. She asked him if he would be open to future things like our parades and he said absolutely so she definitely wants to call him for those things. Afterwards, she attended a memorial for one of our residents, Mr. Huey Meador. Some may remember him from our Veteran's Day ceremony, he was in a wheelchair, but he had his full military outfit on and a lot of times you could see where he sewed and mended it up himself. He passed away earlier this year, and they had a really nice ceremony for him. She said it was going to be sad not seeing him at our Veteran's Day events, but she's glad they got a chance to attend his services. She let his family know, because they weren't from Gardena and they didn't realize he was coming to our Veteran's ceremony, how proud we were that he was there. He did get the opportunity to receive our veteran's recognition here and the coin. They had the coin at the memorial service and were really excited to know that we recognized him for that. One last thing she wanted to share was that she was talking to a resident on Monday, and she was mentioning to her that one of our Public Works guys, who handles the trees, had planted a tree in front of her house a couple of years ago that she had requested. She said that Public Works guy comes by just to make sure her tree is still in good condition and that she's taking care of it and just checks up on it. She couldn't tell her how much she appreciates how nice he is and just what a great job he does, and just wanted to let her know, to please share that with him. The Mayor concluded by saying she appreciates that our staff goes above and beyond just to make sure our residents are happy with their trees and making sure they are taken care of as well because that's important for us to keep trees and the landscape of our City looking good.

(5) COUNCILMEMBER TANAKA – Attended the Employee Mixer, did the South Bay Cities Council of Government board meeting, which he said is always interesting because they talk about a lot of stuff within the South Bay. He attended Fire Station 158's reopening and called it a great barbeque. He went to Ichikawa and, as the Mayor said, it was a very great trip and very informative for our staff. They got to see and relate to what we do to what they do. It wasn't just a tour of Ichikawa to see all the sights, it was more of a working trip, which he thought was really important to both of our cities. He was really impressed with the new sign that we have, our new street sign in the park that they unveiled, he said, it's a great looking sign. There were a lot of great things that they did. He attended the South Bay COG Volunteer Recognition Dinner which our Maria Fonseca got recognized for and she is one of the top people that volunteers at the COG for their environmental projects. Attended the iHop ribbon cutting, did the South Bay Workforce Awards Dinner at the Marriott and commented that it's always great to see all the things that we're doing to get people back on their feet working. He attended the Veteran's Day ceremony for us and thanked the City for allowing him to do the invocation. Attended Coffee with a Cop at El Pollo Inka this morning and said it was a great event. Lastly, he attended the State of the City address for El Segundo Mayor Drew Boyles. He then addressed our Chief Mike Saffell and shared with him that El Segundo's Police Department is doing everything that our Chief is doing so we're a great influence on that city right now. It was a great event, lunch was great, and the city is doing a lot of stuff in San Pedro, they are heads above almost everybody in the South Bay area for economics and what they are doing.

23. ANNOUNCEMENT(S)

Mayor Cerda announced:

1) Annual Helping Hands Program, beginning in October through Friday, December 11, 2023. If you would like to donate NEW unwrapped toys, books, art supplies, board games, sports equipment & gift cards. If you don't have time to shop? Monetary donations are accepted and welcomed via www.cityofgardena.org/events or contact City Hall – Recreation and Human Services Department.
2) Helping Hands Food Vouchers & Toy Registration. If you are a family in need, you must be a City of Gardena resident and you must sign up to make sure that you meet all the requirements. Must be able to provide: Driver License/ID; Proof of Residency and other requirements. This begins Wednesday, November 1 through Thursday, November 30, 2023, by visiting: www.cityofgardena.org/events.
3) Teensgiving, Friday, November 17, 2023; 6:30 pm – 10:30 pm at the Nakaoka Community Center. Dinner, Games, Prizes, Crafts – Get ready to have a blast with your friends and make some new friends too at our Thanksgiving teen night!
4) "Wobble Before You Gobble" Line Dancing Event, Saturday, November 18, 2023; 11 am – 3 pm at Rowley Park at 132nd and Van Ness. We ask that you bring 5 can goods, your family, friends, & picnic chairs for an afternoon of music, dancing, and fun! Helping Hands Opportunity! Purchase raffle tickets to win a prize basket valued at $900+. All proceeds will benefit our Helping Hands Toy Drive & Food Voucher Event.
5) City of Gardena Glow in the Dark Kickball Game, Saturday, November 18, 2023; 6:30 pm at Mas Fukai Park. Free to participate maximum of 10 players per team or register individually to join a team all ages and skills welcome. The team with the best glow-up gear will win a prize. Registration begins Wednesday, November 1, 2023 – Saturday, November 11, 2023.
6) 16th Annual Thanksgiving Celebration, Thursday, November 23, 2023, at El Pollo Inka Restaurant. Free Thanksgiving meal for anyone in need. First Seating: 12-00 pm – 1:30 pm; Second Seating: 1:30 pm – 3:00 pm. We ask that you pre-register with the City of Gardena's Senior Citizen Bureau beginning Wednesday, November 1, 2023, or by calling 310-217-9552.
7) Holiday Boutique, Saturday, December 2, 2023, 1:00 pm – 5:00 pm at the Nakaoka Community Center. Come & Shop for handmade crafts, Christmas decorations, Christmas gifts, One-of-a-kind items and Jewelry.
8) Winter Wonderland, Saturday, December 2, 2023, 3:00 pm – 7:00 pm at City Hall Complex. There will be Snow, Kids activities, Tree lighting, S'mores, Hot cocoa, and more. Make sure to bring your Letter to Santa for a chance to win the North Pole Raffle.
9) Jolly Trolley Park Tour 2023, Tuesday, December 5, Thursday, December 7, and Thursday, December 14, 2023, from 6:00 pm – 8:00 pm for all three (3) days. Follow us on social media for clues on where Santa's Trolley will Pop up!
10) Holiday Home Decoration Contest, if you would like to participate the deadline is Monday, December 11, 2023. The City of Gardena and Gardena Beautification Commission invite you to participate in our City's Holiday Home Decoration Contest! Prizes will be awarded to the best-decorated houses! To register, send a picture of the outside of your decorated home along with your name and address to Holiday constest@cityofgardena.org by Monday, December 11, 2023. All winners will receive a special yard sign, gift certificate, and recognition at the January City Council Meeting!

24. REMEMBRANCES

Seargant Huey Meador, Huey served in the United States Marine Corps and participated in the City's Veterans Day celebrations.

25. ADJOURNMENT

At 10:57 p.m., Mayor Cerda adjourned the Gardena City Council Meeting to the Closed Session portion of the City Council Meeting at 7:00 p.m., and the Regular City Council Meeting at 7:30 p.m. on Tuesday, December 12, 2023. The Gardena City Council Meeting for November 28, 2023, has been cancelled.

MINA SEMENZA
City Clerk of the City of Gardena and
Ex-officio Clerk of the Council

APPROVED:

_____
Tasha Cerda, Mayor

By:_____
Becky Romero, Deputy City Clerk

MINUTES
Special Meeting of the
Gardena City Council
Thursday, December 7, 2023

The Special Meeting of the Gardena City Council of the City of Gardena, California, was called to order at 5:30 PM on Thursday, December 7, 2023, in the Council Chamber at City Hall 1700 West 162nd Street, Gardena, California; Mayor Tasha Cerda presiding.

1. ROLL CALL

Present: Mayor Tasha Cerda; Mayor Pro Tem Mark E. Henderson; Council Member Rodney G. Tanaka; Council Member Paulette C. Francis and Council Member Wanda Love; Other City Officials and Employees present: City Manager Clint Osorio; City Attorney Carmen Vasquez; City Treasurer Guy H. Mato; City Clerk Mina Semenza; and Deputy City Clerk Becky Romero.

2. SPECIAL MEETING

3. PUBLIC COMMENT - *None*

4. DEPARTMENTAL ITEMS - ELECTED & CITY MANAGER'S OFFICES

4.A Consideration of a Purchase and Sale Agreement for the Acquisition of Property Located at 15016 Daphne Avenue / 15016 Nader Place, Gardena, CA 90249 (APN: 4064-023-024) and Declare California Environmental Quality Act (CEQA) Exemption.

City Manager Osorio presented the Staff Report.

Mayor Cerda asked if anyone asked to speak on this item and if the Council had any comments or questions. There were no public speakers.

Questions and comments were made by Council Member Francis asking for confirmation of the name of the building and its location, the appraisal amount, and if this is a good thing for the City; she then asked City Manager Osorio if he could elaborate more on that.

City Manager Osorio and City Attorney Vasquez answered all of her questions. Community Development Director Greg Tsujiuchi was present and answered her question regarding the appraisal amount.

It was moved by Mayor Cerda, seconded by Council Member Love, and carried by the following roll call vote to Approve the Purchase and Sale Agreement for the acquisition of 15016 Daphne Avenue / 15016 Nader Place, Gardena CA 90249 (APN: 4064-023-024), and direct staff to file the attached Notice of Exemption pursuant to Categorical Exemption Guidelines section 15061(b)(3)-commonsense exemption:

Ayes: **Mayor Cerda, Council Member Love, Mayor Pro Tem Henderson, and Council Members Tanaka and Francis**
Noes: **None**
Absent: **None**

4.B Consideration of a Purchase and Sale Agreement for the Acquisition of Property Located at 1112 W. Gardena Boulevard, Gardena, CA 90247 (APNs: 6111-004-032,033) and Declare California Environmental Quality Act (CEQA) Exemption.

City Manager Osorio presented the Staff Report.

Mayor Cerda asked if anyone asked to speak on this item and if the Council had any comments or questions. There were no public speakers.

Questions and comments were made by Mayor Pro Tem Henderson and Council Member Francis regarding having further discussions if we do acquire the property, what it will be used for; the location and its size, the appraised amount, if there is an alley behind the property, and the entrance to the property.

City Manager Osorio, City Attorney Vasquez, Economic Development Manager Jackie Choi, and Community Development Director Tsujiuchi answered all questions.

It was moved by Council Member Love, seconded by Mayor Pro Tem Henderson, and carried by the following roll call vote to Approve the Purchase and Sale Agreement for the acquisition of two parcels located at 1112 W. Gardena Boulevard, Gardena CA 90247 (APNs: 6111-004-032,033), and direct staff to file the attached Notice of Exemption pursuant to Categorical Exemption Guidelines section 15061(b)(3)-commonsense exemption:

Ayes: Council Member Love, Mayor Pro Tem Henderson, Council Members Tanaka and Francis, and Mayor Cerda
Noes: None
Absent: None

5. ADJOURNMENT

At 5:44p.m., Mayor Cerda adjourned the Gardena City Council Meeting to the Closed Session portion of the City Council Meeting at 7:00 p.m., and the Regular City Council Meeting at 7:30 p.m. on Tuesday, December 12, 2023.

MINA SEMENZA
City Clerk of the City of Gardena and
Ex-officio Clerk of the Council

APPROVED:

_____
Tasha Cerda, Mayor

By:_____
Becky Romero, Deputy City Clerk

Regular PEQC Meeting Notice and Agenda of the Planning and Environmental Quality Commission Tuesday, September 5, 2023

The Regular PEQC Meeting Notice and Agenda of the Planning and Environmental Quality Commission of the City of Gardena, California, was called to order at 7:00 PM on Tuesday, September 5, 2023, in the Council Chambers at 1700 W. 162nd Street, Gardena, California.

PARTICIPATE BEFORE THE MEETING by emailing the Planning Commission at planningcommissioner@cityofgardena.org by 5:00 PM on the day of the meeting and write "Public Comment" in the subject line.

1. **CALL MEETING TO ORDER**
   The meeting was called to order at 7:00 PM

2. **ROLL CALL**
   Present: Chair Deryl Henderson; Vice Chair Stephen P. Langley; Commissioner Steve Sherman; Commissioner Jules Kanhan; Commissioner Ronald Wright-Scherr

3. **PLEDGE OF ALLEGIANCE**
   Chair Deryl Henderson led the pledge of allegiance.

4. **ORAL COMMUNICATIONS**
   No members of the public wished to speak to the Planning Commission under oral communications.

5. **OTHER MATTERS**

6.A **PUBLIC CONVENIENCE OR NECESSITY DETERMINATION FOR CONDITIONAL USE PERMIT #5-22**

For a determination of Public Convenience or Necessity to allow the on -site sale and consumption of beer and wine ancillary to a new karaoke bar business at 15210 Western Avenue, pursuant to a Type-42 On-Sale General license with the California Department of Alcoholic Beverage Control (ABC) and determination that the project is exempt from the provisions of the California Environmental Quality Act (CEQA) Guidelines pursuant to Section 15301 and Section 15061(b)(3).
Project Location: 15210 S Western Ave
Applicant: Kyeang Linda Jo (DBA Sul Bar)
Staff Report PCN for Sul Bar.pdf
Attachment A - ABC Form 245.pdf
Attachment B - Staff Report for CUP #5-22.pdf
Attachment C - Resolution No. PC 16-23 Sul Bar FINAL.pdf

Planning Assistant, Kevin La, presented the staff report to the Planning Commission.

Chair Henderson opened and closed the public comment.

MOTION: It was moved by Commissioner Kanhan and seconded by Commissioner Wright-Scherr to approve Resolution PC No. 16-23, for a determination of Public

Convenience or Necessity to allow the on-site sale and consumption of beer and wine to a new karaoke bar business at 15120 S. Western Ave.

The motion was passed by the following roll call vote:

Ayes: Kanhan, Wright-Scherr, Sherman, Langley, Henderson
Noes:

7. PUBLIC HEARING ITEMS

7.A **CONDITIONAL USE PERMIT #6-23**

A request for a conditional use permit, per section 18.32.030.B of the Gardena Municipal Code, to allow the on-site sale and consumption of beer and wine in an existing restaurant located in the General Commercial (C-3) zone and determination that the project qualifies for a Class 1 categorical exemption as an existing facilities project, and exempt pursuant to Section 15061(b)(3) of the California Environmental Quality Act.

Project Locationn: 1845 W Redondo Beach Blvd.

Applicant: Sun Ja Lee

Staff Report (CUP #6-23).pdf
Resolution (CUP #6-23).pdf
Exhibit A: COA (CUP #6-23).pdf
Exhibit B: Project Plan (CUP #6-23).pdf

Mr. La presented the Conditional Use Permit #6-23 to the Planning Commission.

Chair Henderson opened the public hearing.

The applicant's representative, Steve Kim, spoke about the business and the reasons the applicant requested a Conditional Use Permit.

Vice Chair Langley inquired about any difficulties in parking at the plaza.

Mr. Kim explained that there are no issues with parking for patrons visiting Crown Plaza.

Commissioner Kanhan asked if there are other establishments that consume alcohol on the property.

Mr. La responded that there are two restaurants with a CUP for the sale of beer and wine.

Chair Henderson closed the public hearing.

MOTION: It was moved by Commissioner Wright-Scherr and seconded by Chair Henderson to approve Resolution PC No. 14-23, to make the necessary findings and approve Conditional Use Permit #6-23 subject to the attached conditions of approval and direct staff to file a notice of exemption.

The motion was passed by the following roll call vote:

Ayes: Wright-Scherr, Henderson, Sherman, Kanhan, Langley
Noes:

7.B **MODIFICATION OF CONDITIONAL USE PERMIT #13-17**

Continuation to a later Planning Commission meeting.
Project Location: 1650 W 130th St. Applicant: Antonio Valenzuela
Continuation Memo CUP #7-23

Mr. La explained to the Planning Commission that the modification of Conditional Use Permit #13-17 has been continued to a later Planning Commission meeting date and will be re-noticed to the public.

7.C **ZONE TEXT AMENDMENT #4-23**

Reconsideration of an Ordinance Amending Chapter 18.13 of the Gardena Municipal Code relating to Accessory Dwelling Units and making a determination that the Ordinance is exempt from CEQA pursuant to the Public Resources Code Section 21080.17. The Planning Commission is being asked to reconsider additional changes to the draft Ordinance and to make a recommendation to the City Council.
Project Location: Citywide
Staff Report (ADU Recondsideration).pdf
Attachment A - Resolution PC No. 17-23 (ADUs).pdf
Draft Ordinance No. 1856 (ADU2-).pdf
Attachment B - Public Hearing Notice.pdf
Attachment C - Previous Public Comment.pdf

Community Development Director, Greg Tsujiuchi, presented the Zone Text Amendment to the Planning Commission.

Assistant City Attorney, Lisa Kranitz, elaborated that these are mandatory provisions that the State imposed for local governments to follow.

Chair Henderson opened the public hearing.

Vice Chair Langley asked what would happen if the Planning Commission denied this Zone Text Amendment.

Ms. Kranitz responded that the city would default to the State's ADU interpretations and development standards rather than what is proposed in this Zone Text Amendment.

Commissioner Wright-Scherr asked if there were more restrictions on SB9 developments comparatively.

Ms. Kranitz provided examples of mandatory ADUs compared to SB9 developments.

Chair Henderson inquired how many ADU permits had been received within the past year.

Mr. La answered that there have been around 20-30 ADU permits he plan checked in the time frame.

Chair Henderson asked why the Planning Commission must approve this Zone Text Amendment.

Ms. Kranitz explained that the State law applies no matter what as there are already provisions by the State for mandatory ADU approvals.

Vice Chair Langley wanted to confirm if this Zone Text Amendment gives the city more governance than if it was not adopted.

Ms. Kranitz confirmed that would be the case.

Chair Henderson closed the public hearing.

MOTION: It was moved by Vice Chair Langley and seconded by Commissioner Wright-Scherr to approve Resolution PC No. 17-23, to adopt Resolution PC No. 17-23, recommending that the City Council adopt Ordinance No. 1856, amending Chapter 18.13 of the Gardena Municipal Code relating to Accessory Dwelling Units, with input on the size of ADUs, and made a determination that the Ordinance is exempt from CEQA pursuant to the Public Resources Code Section 21.080.17.

The motion was passed by the following roll call vote:

Ayes: Langley, Wright-Scherr, Sherman, Kanhan, Henderson
Noes:

8. **COMMUNITY DEVELOPMENT DIRECTOR'S REPORT**

Mr. Tsujiuchi reminded the Planning Commission of upcoming city events: Keep Gardena Beautiful Day on September 16th from 8 AM to 12 PM and registration started on September 1st, Employee Recognition Day on September 21st from 12 PM to 2 PM, with the theme of "All-Star Cast," and the Annual Food, Wine, and Brew, on September 23rd from 12 PM to 7 PM.

9. **PLANNING & ENVIRONMENTAL QUALITY COMMISSIONERS' REPORTS**

No commissioners had items to report.

10. **ADJOURNMENT**

Chair Henderson adjourned the meeting at 7:52 PM.

Respectfully submitted,

GREG TSUJIUCHI, SECRETARY
Planning and Environmental Quality Commission

DERYL HENDERSON, CHAIR
Planning and Environmental Quality Commission

Regular PEQC Meeting Notice and Agenda of the Planning and Environmental Quality Commission Tuesday, November 7, 2023

The Regular PEQC Meeting Notice and Agenda of the Planning and Environmental Quality Commission of the City of Gardena, California, was called to order at 7:00 PM on Tuesday, November 7, 2023, in the Council Chambers at 1700 W. 162nd Street, Gardena, California.

PARTICIPATE BEFORE THE MEETING by emailing the Planning Commission at planningcommissioner@cityofgardena.org by 5:00 PM on the day of the meeting and write "Public Comment" in the subject line.

1. **CALL MEETING TO ORDER**
   The meeting was called to order at 7:00 PM

2. **PLEDGE OF ALLEGIANCE**
   Commissioner Sherman led the pledge of allegiance.

3. **ROLL CALL**
   Present: Vice Chair Stephen P. Langley; Commissioner Steve Sherman; Commissioner Jules Kanhan; Commissioner Ronald Wright-Scherr

   Absent: Chair Deryl Henderson

4. **APPROVAL OF MINUTES**

   4.A August 15, 2023 MEETING
   23_08_15 PCMIN.pdf

   A motion was made by Commissioner Wright-Scherr and seconded by Commissioner Sherman to approve the minutes of the meeting on August 15, 2023.

   The motion was passed by the following roll call vote:
   Ayes: Wright-Scherr, Sherman, Kanhan, Langley
   Noes:

5. **ORAL COMMUNICATIONS**
   No members of the public wished to speak to the Planning Commission at this time.

6. **OTHER MATTERS**

   6.A **SECOND REQUEST FOR EXTENSION**
   Second request extension of time for Tentative Parcel Map No. 82410, to subdivide a 17,221 square foot property at 15906-15908 S. Manhattan Place creating two separate parcels in the Low-Density Multiple-Family Residential (R-2) zone
   LOCATION: 15906-15908 S. Manhattan Place
   APPLICANT: Nancy Hurt Canady
   Staff Report (15906-15908 Manhattan).pdf
   Attachment A - Statement of Reasons for Extension of Time.pdf Attachment B - Tentative Parcel Map No. 82410.pdf

Senior Planner, Amanda Acuna, presented the second request for extension to the Planning Commission.

Vice Chair Langley opened the public comment.

Commissioner Kanhan wished to be reminded about the reasoning for the second extension.

The applicant's representative, Carl Remert, stated that the reason for the second request for extension is because of financial constraints that have lasted since COVID.

Vice Chair Langley closed the public comment.

MOTION: It was moved by Commissioner Kanhan and seconded by Commissioner Wright-Scherr to approve and grant the second request for extension of Tentative Parcel Map No. 82410 at 15906-15908 S. Manhattan Pl.

The motion was passed by the following roll call vote:

Ayes: Kanhan, Wright-Scherr, Sherman, Langley
Noes:

7. PUBLIC HEARING ITEMS

7.A FIRST MODIFICATION TO CONDITIONAL USE PERMIT #13-17

A request for a modification to Conditional Use Permit #13-17, to add an additional prefabricated storage container to the property and other site changes for a landscaping contractor's yard and determination that the project qualifies for both a Class 3 (new construction/conversion of small structures) and Class 11 (accessory structures) categorical exemption, pursuant to the California Environmental Quality Act
LOCATION: 1650 W 130th Street (APN: 6102-006-005)
APPLICANT: Antonio Valenzuela (Mariposa Landscapes Inc)
Staff Report - Landscape Contractor (Mod to CUP #13-17).pdf
Attachment A - Resolution No. PC 15-23.pdf
Exhibit A - Modified Conditions of Approval (Mod to CUP #13-17).pdf
Exhibit B - Project Plans.pdf
Attachment B - Original Staff Report.pdf

Planning Assistant, Kevin La, presented the staff report to the Planning Commission.

Vice Chair Langley opened and public hearing.

Vice Chair Langley asked if Golden State Water had been notified about the gravel area and if water would percolate into the drinking water.

Ms. Acuna answered that the original permits were reviewed by Building and Safety but expired and are required to be resubmitted and reviewed again through plan check, which includes a review of groundwater exposure.

The applicant, Antonio Valenzuela, stated that the permits expired because of COVID. Mr. Valenzuela will work with Building and Safety to continue with the plan check review.

Vice Chair Langley closed the public hearing.

MOTION: It was moved by Commissioner Wright-Scherr and seconded by Commissioner Kanhan to approve a request for modification to Conditional Use Permit #13-17 to the attached conditions of approval and direct staff to file a notice of exemption.

The motion was passed by the following roll call vote:

Ayes: Wright-Scherr, Kanhan, Sherman, Langley
Noes:

7.B **ZONE TEXT AMENDMENT #6-23**

Recommendation to the City Council on adoption of Ordinance No. 1860 to repeal and readopt Chapter 18.43 of the Gardena Municipal Code relating to Density Bonus Laws, and finding the Ordinance to be exempt pursuant to the common sense exemption of CEQA Guidelines Section 15061(b)(3)

Staff Report - Density Bonus Ordinance.pdf
Attachment A - Resolution PC No. 19-23 (Density Bonus).pdf
Exhibit A - Draft Ordinance No. 1860.pdf
Attachment B - Public Hearing Notice.pdf

Ms. Acuna presented the Zone Text Amendment to the Planning Commission.

Vice Chair Langley opened and public hearing.

Commissioner Wright-Scherr asked if the new state law allows the city to have a say in what the developer can propose including in height and parking.

Ms. Acuna stated that if a property were zoned for a certain level of density, they could increase the density based on the percentage of affordable housing. If there are certain development standards in the city's codes that would physically preclude that development, then the city would have to allow for that increase in height. The state law sets aside its own parking regulations for density bonus projects and the new residential zoning districts the city had adopted, through the new housing overlays, are similar in standards, but the state's law sets the parking requirements and there will be less parking required typically.

Assistant City Attorney, Rosemary Koo, further added that the purpose of the Zone Text Amendment is to make sure that every time the State comes out with new laws, for density and affordability, the city will be in compliance by reference to the State law.

Community Development Director, Greg Tsujiuchi, stated that this is not unusual to adopt by reference as the city's building codes are adopted by reference as well.

Commissioner Kanhan asked who decides the types of units that are provided for low-income and if there is a discrepancy between at-market units compared to affordable units.

Ms. Acuna responded that the State law requires the affordable housing units to have the same quality as the rest of the units in the development while still meeting the minimum requirements.

Vice Chair Langley asked if the city could put a requirement into a project to make sure that the affordable units are of the same quality and size as the other at-market units.

Ms. Acuna responded that there have been more density bonus projects proposed during this time and would like to see more mixed types of units between studio and multi-bedroom units. Staff pursues to have those mixed types of units to allow for one affordable unit to be able to move up the bedroom types based on the income. The density bonus projects will still come before the Planning Commission for project consideration.

Commissioner Wright-Scherr inquired if the city could enforce the different types of mixed units for affordable housing by state guidelines.

Ms. Koo responded that the density bonus project, by state law, is to allow for negotiation back and forth between the developer and the city. There is a lot of back and forth that is built into the statute and as a whole, the state law, requires that the affordable units cannot be different and to make them comparable and in proportion to the at-market units.

Vice Chair Langley replied that if the city has the right to turn down a project if it is not balanced enough.

Ms. Koo answered that the density bonus project cannot be denied because if a housing project is a by right use, the discretion to deny the project is taken away. However, there are concessions and waivers that can be negotiated between the city and developers.

Mr. Tsujiuchi mentioned that a lot of current projects are for apartment housing. Even then, there are at most two-bedroom units proposed at this current time.

Vice Chair Langley and Commissioner Wright-Scherr want to clarity if the projects going for density bonuses will not discriminate on affordable housing at the location or size of the units.

Ms. Acuna answered that per the Gardena Municipal Code section 18.43.040.G, the city adopted similar language required that the affordable unit shall be similar to market rate units in regard to interior finish for amenities and all have access in the same way as the market rate unit.

Ms. Koo mentioned that the agenized item is to make sure that we have a code that is in line with the state density bonus law and does not affect the section that Ms. Acuna had brought up.

Vice Chair Langley closed the public hearing.

MOTION: It was moved by Commissioner Wright-Scherr and seconded by Vice Chair Langley to adopt Resolution PC no. 19-23, recommending that the City Council adopt Ordinance 1860, to repeal and readopt Chapter 18.43 of the Gardena Municipal Code relating to Density Bonus Laws, and finding the Ordinance to be exempt pursuant to the common sense exemption of CEQA Guidelines Section 15061(b)(3).

The motion was passed by the following roll call vote:

Ayes: Wright-Scherr, Langley, Kanhan, Sherman
Noes:

8. **COMMUNITY DEVELOPMENT DIRECTOR'S REPORT**

Mr. Tsujiuchi announced the following upcoming events: Homeless Workshop on November 8th at 6:00 PM, at the Nakaoka Center, Community Workshop on November 13th from 6:00 PM to 8:00 PM, at 14600 Western Ave, for a new residential apartment building along Western Ave., and Veterans Day ceremony on November 11th in front of City Hall.

Commissioner Wright-Scherr inquired if the city has services to help homeless people if he sees them.

Mr. La responded that the Gardena Police Department and Recreation and Human Services Department have a homeless taskforce that can help assess and provide resources to the individual in need.

9. **PLANNING & ENVIORNMENTAL QUALITY COMMISSIONERS' REPORTS**

No commissioners had items to report.

10. **ADJOURNMENT**

Chair Henderson adjourned the meeting at 8:07 PM.

Respectfully submitted,

GREG TSUJIUCHI, SECRETARY
Planning and Environmental Quality Commission

DERYL HENDERSON, CHAIR
Planning and Environmental Quality Commission

MEMORANDUM

TO: Honorable Mayor and City Council

FROM: City Treasurer's Office

DATE: November 28, 2023

SUBJECT: WARRANT REGISTER
PAYROLL REGISTER

November 28, 2023	TOTAL WARRANTS ISSUED:	$893,270.71

Wire Transfer:
Prepay:
Check Numbers: 174093-174223
Checks Voided:

Total Pages of Register: 14

November 17, 2023	TOTAL PAYROLL ISSUED:	$2,330,019.43

Guy Mato, City Treasurer

Bank code : usb

Voucher	Date	Vendor	Invoice	PO #	Description/Account	Amount
174093	11/28/2023	104606 2 BROTHERS TIRES & WHEELS	27482		PD VEHICLE TIRE SERVICES	20.00
			27483		PD VEHICLE TIRE SERVICES	20.00
			27487		PD VEHICLE TIRE SERVICES	20.00
					Total :	**60.00**
174094	11/28/2023	101748 AFTERMARKET PARTS COMPANY LLC, THE	83178981	037-10275	GTRANS AUTO PARTS	596.69
			83193928	037-10275	GTRANS AUTO PARTS	730.29
			83193929	037-10275	GTRANS AUTO PARTS	128.11
			83193930	037-10275	GTRANS AUTO PARTS	1,513.91
			83193931	037-10275	GTRANS AUTO PARTS	366.03
			83196718	037-10275	GTRANS AUTO PARTS	77.79
			83198108	037-10275	GTRANS AUTO PARTS	240.61
			83201874	037-10275	GTRANS AUTO PARTS	909.23
			83204913	037-10275	GTRANS AUTO PARTS	730.29
					Total :	**5,292.95**
174095	11/28/2023	112686 AGRI-TURF DISTRIBUTING, LLC	91332		PARK MAINT SUPPLIES	1,304.05
					Total :	**1,304.05**
174096	11/28/2023	112571 AMBIT CONSTRUCTION &, DESIGN, INC.	1455 10/04/2023		GTRANS DISPATCH REMODELING PRC	41,650.75
				037-10241		
					Total :	**41,650.75**
174097	11/28/2023	110028 ANSER ADVISORY MANAGEMENT LLC	20547	037-10228	PROJECT MANAGEMENT SUPPORT - E	2,745.00
					Total :	**2,745.00**
174098	11/28/2023	616090 AT&T	3103232408 11/01/23		TELEPHONE	3,979.56
					Total :	**3,979.56**
174099	11/28/2023	111170 AT&T FIRSTNET	287290395417x111023	023-01492	PD CELL PHONE ACCT #287290395417	409.11
			287293416290x111023	023-01492	PD CELL PHONE ACCT #287293416290	1,982.82
			287293420631x111023	023-01492	CD CELL PHONE ACCT #287293420631	148.99
			287295242065x111023	023-01492	PD CELL PHONE ACCT #287295242065	262.47
			287303490376X111023	023-01492	BUS CELL PHONE ACCT #28730349037	1,557.63
					Total :	**4,361.02**

Bank code : usb

Voucher	Date	Vendor	Invoice	PO #	Description/Account	Amount
174100	11/28/2023	100474 AT&T LONG DISTANCE	111223		TELEPHONE	124.53
					Total :	**124.53**
174101	11/28/2023	100964 AT&T MOBILITY	828667974x111623		PD CELL PHONE ACCT #828667974	86.46
					Total :	**86.46**
174102	11/28/2023	109824 AXON ENTERPRISE INC.	INUS197324		PD PROGRAM SUPPLIES	307.60
					Total :	**307.60**
174103	11/28/2023	110686 AZTECH ELEVATOR COMPANY	AZ118104	037-10244	ELEVATOR MAINTENANCE - GTRANS	285.00
			AZ18108	037-10244	ELEVATOR MAINTENANCE - GTRANS	83.33
					Total :	**368.33**
174104	11/28/2023	102054 BAVCO	242720		(25) BACKFLOW VALVE INSPECTIONS	1,125.00
					Total :	**1,125.00**
174105	11/28/2023	102400 BAYSIDE MEDICAL CENTER	00162021		BLOOD DRAW	375.80
					Total :	**375.80**
174106	11/28/2023	103641 BECNEL UNIFORMS	60706		BUS UNIFORM SUPPLIES	714.98
			62544		BUS UNIFORM SUPPLIES	925.15
			63628		BUS UNIFORM SUPPLIES	493.85
					Total :	**2,133.98**
174107	11/28/2023	102135 BEHRENDS, KENT	217	023-01474	IT NETWORK SUPPORT - NOVEMBER 2	3,400.00
					Total :	**3,400.00**
174108	11/28/2023	111709 BELTRAN, ARMANDO	10/30/23-11/01/23		ANNUAL JAIL TRAINING - PER DIEM	150.00
					Total :	**150.00**
174109	11/28/2023	107747 BENGAR PRODUCTIONS	7303		EMBROIDERY - REC STAFF SHIRTS	255.00
			7304		EMBROIDERY - REC/HS STAFF SHIRTS	154.00
			7305		EMBROIDERY - REC/HS STAFF POLO	1,278.00
					Total :	**1,687.00**
174110	11/28/2023	109377 BOB BARKER COMPANY, INC.	INV1950325		JAIL PROGRAM SUPPLIES	180.26
					Total :	**180.26**

Bank code : usb

Voucher	Date	Vendor	Invoice	PO #	Description/Account	Amount
174111	11/28/2023	112184 BONFIRELA PRODUCTIONS	1740	037-10258	LINE 7X DIGITAL DISPLAY MARKETING	7,250.00
					Total :	**7,250.00**
174112	11/28/2023	111902 BPR CONSULTING GROUP LLC	1093	032-00144	CONSULTING SERVICES - OCTOBER 2(	47,516.24
					Total :	**47,516.24**
174113	11/28/2023	105991 BURRO CANYON ENT., INC.	3042		RANG FEE 10/10/23	100.00
					Total :	**100.00**
174114	11/28/2023	110313 CALTIP	94-2023-OCTOBER	037-10245	INSURANCE CLAIMS DEDUCTIBLE - OC	1,892.89
					Total :	**1,892.89**
174115	11/28/2023	823003 CARL WARREN & COMPANY	OCTOBER 2023		CLAIMS MANAGEMENT	3,504.00
					Total :	**3,504.00**
174116	11/28/2023	803420 CARPENTER, ROTHANS & DUMONT, LAW OFI	44634		LEGAL SERVICES	4,759.80
					Total :	**4,759.80**
174117	11/28/2023	111534 CLEAN ENERGY	PJI00025410	037-10062	GTRANS FACILITY MODIFICATION	29,083.88
					Total :	**29,083.88**
174118	11/28/2023	111708 COMMLINE, INC.	039801	037-10098	DIGITAL BUS RADIO SYSTEM PURCHA:	83,975.00
					Total :	**83,975.00**
174119	11/28/2023	111708 COMMLINE, INC.	0419207	037-10098	DIGITAL BUS RADIO SYSTEM PURCHA:	1,245.00
					Total :	**1,245.00**
174120	11/28/2023	103465 COMMUNITY VETERINARY HOSPITAL	501510		VETERINARY SERVICES - VITO	262.00
					Total :	**262.00**
174121	11/28/2023	102388 COPYLAND, INC.	84333	037-10278	GTRANS FORMS	1,857.40
					Total :	**1,857.40**
174122	11/28/2023	105781 CORDOVA & ASSOCIATES	23074		GTRANS PROMOTIONAL ITEMS	2,000.59
					Total :	**2,000.59**
174123	11/28/2023	103353 CRM COMPANY, LLC.	LA23841		SCRAP TIRE DISPOSAL FEE	69.50
			LA23842		SCRAP TIRE DISPOSAL FEE	69.50

Bank code : usb

Voucher	Date	Vendor	Invoice	PO #	Description/Account	Amount
174123	11/28/2023	103353 CRM COMPANY, LLC.	(Continued)			
			LA23872		SCRAP TIRE DISPOSAL FEE	69.50
					Total :	**208.50**
174124	11/28/2023	110844 DATA GEAR, INC.	44320	035-01284	VIDEO POLICING SYSTEM MAINTENAN	5,301.03
					Total :	**5,301.03**
174125	11/28/2023	111874 DAVID VOLZ DESIGN LANDSCAPE, ARCHITEC	422606	024-00901	MAS FUKAI PARK IMPROVEMENTS	29,200.00
					Total :	**29,200.00**
174126	11/28/2023	104527 DEPARTMENT OF INDUSTRIAL, RELATIONS	E 2010819		CONVEYANCE INSPECTION FEE - 1717	225.00
			E2010814MR		CONVEYANCE INSPECTION FEE - 1700	125.00
			E2010816MR		CONVEYANCE INSPECTION FEE - 1670	125.00
			E2010818MR		CONVEYANCE INSPECTION FEE - 1670	225.00
					Total :	**700.00**
174127	11/28/2023	112646 DFA, LLC	202311101520	023-01478	GASB 75 GTRANS REPORT	3,000.00
			202311101523-1	023-01478	GASB 75 GTRANS REPORT	1,000.00
			202311101637	023-01478	GASB 75 CITY REPORT	3,000.00
			202311101638	023-01478	GASB 75 CITY REPORT	1,000.00
			202311101643	023-01478	OPEB GASB 75 SEWER REPORT	1,000.00
			202311101644	023-01478	GASB 75 SEWER REPORT	500.00
					Total :	**9,500.00**
174128	11/28/2023	110534 EL DORADO NATIONAL	90814342	037-10193	GTRANS BUS VEHICLE SUPPLIES	12,276.15
			90828531		GTRANS BUS VEHICLE SUPPLIES	658.47
					Total :	**12,934.62**
174129	11/28/2023	107353 EMERGENCY RESPONSE CRIME SCENE, CLE	T2023-535		SANITIZE & CLEAN-UP JAIL CELL/VECH	1,100.00
					Total :	**1,100.00**
174130	11/28/2023	105418 EMPIRE CLEANING SUPPLY	S6137308		CUSTODIAL SUPPLIES	50.86
					Total :	**50.86**
174131	11/28/2023	112526 ESPARZA JR., JOSEPH P.	110823		CWEA SAFETY DAY - REIMBURSEMEN	71.66
					Total :	**71.66**
174132	11/28/2023	110833 FATA, ROBERT	110823		CWEA SAFETY DAY - REIMBURSEMEN	68.12

Bank code : usb

Voucher	Date	Vendor	Invoice	PO #	Description/Account	Amount
174132	11/28/2023	110833 110833 FATA, ROBERT	(Continued)		**Total :**	**68.12**
174133	11/28/2023	110241 FERNANDO PULLUM COMMUNITY ARTS, CEN	379		GTRANS ANNUAL AWARDS EVENT	400.00
					Total :	**400.00**
174134	11/28/2023	103083 FIRST ADVANTAGE LNS OCC HEALTH, SOLUT	2503722310		DRUG TEST/ADMIN FEE	722.28
					Total :	**722.28**
174135	11/28/2023	107002 FLETCHER, JOSEPH	10/26-10/27		2023 CALBO CONFERENCE	50.22
					Total :	**50.22**
174136	11/28/2023	112329 FM THOMAS AIR CONDITIONING INC	45936		SERVICE CALL - HVAC REPAIRS	962.98
					Total :	**962.98**
174137	11/28/2023	112685 FOREIGN AUTO BODY, INC.	3395		2020 FORD INTRCPT #1591740 REPAIR	1,740.31
					Total :	**1,740.31**
174138	11/28/2023	106465 FOX FIRST AID & SAFETY INC	71365		PW SHOP SUPPLIES	151.04
			71449		PARK MAINT SUPPLIES	147.74
			71453		STREET MAINT SUPPLIES	15.44
			71457		PARK MAINT SUPPLIES	73.87
			71466		PARK MAINT SUPPLIES	59.54
			71509		PARK MAINT SUPPLIES	145.53
					Total :	**593.16**
174139	11/28/2023	107030 GARDENA AUTO PARTS	172783		PW AUTO PARTS	48.49
					Total :	**48.49**
174140	11/28/2023	107011 GARDENA VALLEY NEWS, INC.	00136261		SUMMARY OF ORDINANCE NO.1856	133.00
			00136392		NOTICE OF PUBLIC HEARING - ORDAN	210.00
					Total :	**343.00**
174141	11/28/2023	619005 GAS COMPANY, THE	110723		CNG FUEL	1,175.75
					Total :	**1,175.75**
174142	11/28/2023	111964 GCAP SERVICES, INC.	19	037-10116	CNG PROJECT LABOR COMPLIANCE A	873.75
					Total :	**873.75**

Bank code : usb

Voucher	Date	Vendor	Invoice	PO #	Description/Account	Amount
174143	11/28/2023	106470 GILLIG LLC	41105686	037-10270	GTRANS AUTO PARTS	147.53
					Total :	**147.53**
174144	11/28/2023	619004 GOLDEN STATE WATER CO.	110323		WATER	11,004.55
					Total :	**11,004.55**
174145	11/28/2023	107513 GRAINGER	9891909278		BUS FACILITY SUPPLIES	41.47
			9892657322		BUS FACILITY SUPPLIES	367.87
			9896393890		BUS FACILITY SUPPLIES	200.73
			9897991452		TRAFFIC SIGNALS/SIGNS	264.50
					Total :	**874.57**
174146	11/28/2023	112374 GRIFFIN STRUCTURES, INC.	GSI-GCASC-10	024-00910	AQUATIC & SENIOR CENTER PROJECT	4,029.90
					Total :	**4,029.90**
174147	11/28/2023	208478 HEITMEYER, JAMES	11/06-11/08		ANNUAL JAIL TRAINING	150.00
					Total :	**150.00**
174148	11/28/2023	112076 HERNANDEZ, ROSA	24		INTERN SERVICES - 11/02-11/15/23	1,365.00
					Total :	**1,365.00**
174149	11/28/2023	108434 HOME DEPOT CREDIT SERVICES	3903815		PD PROGRAM SUPPLIES	86.42
			4903706		PD PROGRAM SUPPLIES	260.61
			7904440		REC PROGRAM SUPPLIES	538.21
					Total :	**885.24**
174150	11/28/2023	111593 INTER-CON SECURITY SYSTEMS INC	BD0276184	037-10211	GTRANS SECURITY SERVICES - OCTO	7,233.26
			BD0276189	037-10211	GTRANS SECURITY SERVICES - OCTO	371.79
					Total :	**7,605.05**
174151	11/28/2023	110853 JONES & MAYER	117148		ATTORNEY SERVICES	3,540.50
			119140	020-00048	ATTORNEY SERVICES	10,928.35
			119141		ATTORNEY SERVICES	947.85
			119142		ATTORNEY SERVICES	182.88
			119143		ATTORNEY SERVICES	223.02
			119144		ATTORNEY SERVICES	342.92
			119145		ATTORNEY SERVICES	752.72
			119146		ATTORNEY SERVICES	731.55

Bank code : usb

Voucher	Date	Vendor	Invoice	PO #	Description/Account	Amount
174151	11/28/2023	110853 JONES & MAYER	(Continued)			
			119147		ATTORNEY SERVICES	3,540.50
			119149		ATTORNEY SERVICES	48.17
			119150		ATTORNEY SERVICES	274.33
			119151		ATTORNEY SERVICES	4,544.13
			119153		ATTORNEY SERVICES	3,624.13
			119154		ATTORNEY SERVICES	6,021.66
			119155		ATTORNEY SERVICES	195.14
			119156		ATTORNEY SERVICES	1,325.93
			119157		ATTORNEY SERVICES	4,046.38
			119158		ATTORNEY SERVICES	651.75
			119160		ATTORNEY SERVICES	2,369.63
			119161		ATTORNEY SERVICES	45.72
			119162		ATTORNEY SERVICES	1,951.48
			119299		ATTORNEY SERVICES	39.99
					Total :	**46,328.73**
174152	11/28/2023	101080 KEVIN EHRHART MD CONSULTING, C/O LOCU	2882		CONSULTING SERVICES	325.00
					Total :	**325.00**
174153	11/28/2023	110989 KOA CORPORATION	JC36122-2	024-00994	CMI SERVICES - VAN NESS REHAB, JN	9,264.00
					Total :	**9,264.00**
174154	11/28/2023	112145 L.A. COUNTY FIRE DEPARTMENT	IN0434687		HAZARDOUS MATERIALS DISCLOSURE	6,191.00
					Total :	**6,191.00**
174155	11/28/2023	109939 LA UNIFORMS & TAILORING	18375		PD UNIFORM SUPPLIES	695.07
					Total :	**695.07**
174156	11/28/2023	112614 LAX AUTO REPAIR	19021		2022 FORD INTRCPT #1630466 OIL & FI	70.00
			19059		2022 FORD INTRCPT #1630465 OIL CHA	70.00
					Total :	**140.00**
174157	11/28/2023	112260 LIEBERT CASSIDY WHITMORE	251490		ANNUAL TRAINING	1,925.00
					Total :	**1,925.00**
174158	11/28/2023	109563 LUCKY LADY CASINO	0850000219		ECONOMIC ASSISTANCE - OCTOBER 2	35,685.36

Bank code : usb

Voucher	Date	Vendor	Invoice	PO #	Description/Account	Amount
174158	11/28/2023	109563 109563 LUCKY LADY CASINO	(Continued)		**Total :**	**35,685.36**
174159	11/28/2023	112615 LU'S LIGHTHOUSE, INC.	01251998	037-10271	GTRANS SHOP SUPPLIES	347.95
			01252807	037-10271	GTRANS SHOP SUPPLIES	15.10
			01253201	037-10271	GTRANS SHOP SUPPLIES	158.11
			01253645	037-10271	GTRANS SHOP SUPPLIES	322.16
			01253646	037-10271	GTRANS SHOP SUPPLIES	389.51
					Total :	**1,232.83**
174160	11/28/2023	105082 MAJESTIC LIGHTING, INC.	ML86410		GTRANS MAINT SUPPLIES	1,927.83
			ML86497		BLDG MAINT SUPPLIES	34.31
			ML86672		BLDG MAINT SUPPLIES	57.24
					Total :	**2,019.38**
174161	11/28/2023	813030 MANNING & KASS	788856		LEGAL SERVICES	34,601.50
					Total :	**34,601.50**
174162	11/28/2023	110306 MARIPOSA LANDSCAPES, INC	104989	024-00984	MEDIAN LANDSCAPE MAINTENANCE	8,864.00
					Total :	**8,864.00**
174163	11/28/2023	113046 MARX BROS. FIRE EXTINGUISHER, CO., INC.	P30995		FIRE EXTINGUISHER SERVICE - PW	673.95
			S12299		FIRE EXTINGUISHER SERVICE - PW	95.00
					Total :	**768.95**
174164	11/28/2023	110206 MICHELIN NORTH AMERICA, INC.	DA0054994982	037-10172	GTRANS' BUS TIRE LEASE SERVICES -	6,386.09
					Total :	**6,386.09**
174165	11/28/2023	111604 MICRO ELECTRONICS, INC	12735519	023-01483	(5) TRAINING LAPTOPS	13,861.57
			12735542	023-01483	COMPUTER REPLACEMENT PARTS	253.09
					Total :	**14,114.66**
174166	11/28/2023	112597 MOBILE ILLUMINATION, INC.	2023.55	024-00967	CHRISTMAS LIGHTING INSTALLATION	5,652.00
					Total :	**5,652.00**
174167	11/28/2023	113721 MYERS TIRE SUPPLY COMPANY	31415085		PW SHOP SUPPLIES	680.01
					Total :	**680.01**
174168	11/28/2023	110575 OCCUPATIONAL HEALTH CENTERS, OF CALIF	80969160		RANDOM TESTS	663.00

Bank code : usb

Voucher	Date	Vendor	Invoice	PO #	Description/Account	Amount
174168	11/28/2023	110575 OCCUPATIONAL HEALTH CENTERS, OF CALIF	(Continued)			
			81040836		RANDOM TESTS	374.00
			81041045		RANDOM TESTS	388.00
			81117623		RANDOM TESTS	128.00
			8115741		RANDOM TESTS	367.00
					Total :	**1,920.00**
174169	11/28/2023	111358 O'REILLY AUTO PARTS	382278		PW AUTO PARTS	1,198.12
					Total :	**1,198.12**
174170	11/28/2023	115810 ORKIN PEST CONTROL	250681283		PEST CONTROL - ACCT #27336703	283.99
					Total :	**283.99**
174171	11/28/2023	110403 PENN RECORDS MANAGEMENT	0138967		OFF-SITE STORAGE SERVICES - OCTC	61.75
					Total :	**61.75**
174172	11/28/2023	119271 PENSKE CHEVROLET	289125		PW AUTO PARTS	1,164.17
			289212		PW AUTO PARTS	155.34
					Total :	**1,319.51**
174173	11/28/2023	116140 PETE'S ROAD SERVICE, INC.	711573		TIRES DISPOSAL FEE	177.50
					Total :	**177.50**
174174	11/28/2023	111883 PROJECT PARTNERS, INC.	11478	024-00890	PROJECT MANAGEMENT SERVICES	3,960.00
					Total :	**3,960.00**
174175	11/28/2023	102677 PROVIDENCE HEALTH & SERVICES	600000283 11/05/2023		PRE-EMPLOYMENT PHSYICALS	1,140.00
					Total :	**1,140.00**
174176	11/28/2023	107419 PULSAR	29427	037-10229	GTRANS MICRO TRANSIT BRANDING	3,510.00
					Total :	**3,510.00**
174177	11/28/2023	104868 PYRO-COMM SYSTEMS, INC.	10012482	037-10250	ANNUAL FIRE ALARM TESTING - BLDG	600.00
					Total :	**600.00**
174178	11/28/2023	102283 QUICK COLOR PRINTING	16109		MLK EVENT BANNER	66.15
					Total :	**66.15**

Bank code : usb

Voucher	Date	Vendor	Invoice	PO #	Description/Account	Amount
174179	11/28/2023	103072 REACH	1123147		EAP SERVICES/REACHLINE NEWSLET	902.00
					Total :	**902.00**
174180	11/28/2023	109668 RHEE, KATHERINE	04/14-04/17/23		EDUCATIONAL REIMBURSEMENT	300.00
					Total :	**300.00**
174181	11/28/2023	118476 RICOH USA, INC.	9032197373	023-01479	RICOH PRO8100SE COPIER BASE LEA	380.97
			9032197457	023-01479	RICOH DD6650P COPIER LEASE - PRIN	869.13
			9032228366		RICOH COPIER USAGE CHARGES - VA	1,491.69
					Total :	**2,741.79**
174182	11/28/2023	112433 RIGHTWAY HEALTHCARE, INC	INV14997	023-01485	HEALTHCARE NAVIGATION SERVICES	1,810.25
					Total :	**1,810.25**
174183	11/28/2023	111867 RJM DESIGN GROUP	36072	024-00795	DESIGN & ENGINEERING - AQUATIC &	2,125.05
					Total :	**2,125.05**
174184	11/28/2023	112557 SA ASSOCIATES	VERMONT -05	024-00955	CMI SERVICES - VERMONT/166TH ST II	3,874.00
					Total :	**3,874.00**
174185	11/28/2023	119022 SAFE MART OF SOUTHERN, CALIFORNIA, INC	286		PD PROGRAM SUPPLIES	29.88
			363		PD PROGRAM SUPPLIES	18.85
					Total :	**48.73**
174186	11/28/2023	119015 SAFETY-KLEEN CORPORATION	91846731		SERVICE AQUEOUS PARTS WASHER	1,134.11
					Total :	**1,134.11**
174187	11/28/2023	112327 SAMI'S REFEREES LLC	10/16-10/31/23		SPORT REFEREE SERVICES	1,180.00
			11/01-11/15/23		SPORT REFEREE SERVICES	830.00
					Total :	**2,010.00**
174188	11/28/2023	105934 SANTIN, STEPHANY	10/30-11/04		ICHIKAWA SISTER CITY TRIP	375.00
					Total :	**375.00**
174189	11/28/2023	219070 SCHERER, JOHN M.	11082023		CWEA SAFETY DAY - REIMBURSEMEN	53.84
					Total :	**53.84**
174190	11/28/2023	103053 SEARLE, DOLORES	11/06-11/08		ANNUAL JAIL TRAINING	150.00

Bank code : usb

Voucher	Date	Vendor	Invoice	PO #	Description/Account	Amount
174190	11/28/2023	103053 103053 SEARLE, DOLORES	(Continued)		**Total :**	**150.00**
174191	11/28/2023	112684 SEE, STEPHANIE	CIT #366131364		REFUND - INTERCEPTED BY FTB IN EF	120.00
					Total :	**120.00**
174192	11/28/2023	112689 SEMENZA, MINA	10/30-11/04/23		ICHIKAWA SISTER CITY TRIP	375.00
					Total :	**375.00**
174193	11/28/2023	107736 SEQUEL CONTRACTORS, INC.	985 #5	024-00924	BUDLONG AVE/HALLDALE AVE ST IMPF	114,991.80
					Total :	**114,991.80**
174194	11/28/2023	119233 SHERWIN-WILLIAMS CO.	3996-8		STREET MAINT SUPPLIES	9.25
					Total :	**9.25**
174195	11/28/2023	107442 SHIN, TED	GEPCO 2023		GEPCO LOAN	2,000.00
					Total :	**2,000.00**
174196	11/28/2023	119378 SMARDAN SUPPLY CO.	S4015365		BLDG MAINT SUPPLIES	629.54
					Total :	**629.54**
174197	11/28/2023	112633 SOUTH BAY KUSTOMZ, LLC	13516		2021 FORD EXPLR #P04 OIL CHANGE	91.50
			13517		2017 FORD EXPLR #P12 BRAKE SERVI	783.54
					Total :	**875.04**
174198	11/28/2023	619003 SOUTHERN CALIFORNIA EDISON	110323		LIGHT & POWER	66,998.65
					Total :	**66,998.65**
174199	11/28/2023	108238 SPARKLETTS	14211220 110123		DRINKING WATER FILTRATION SYSTEM	42.99
			15638236 110323		DRINKING WATER FILTRATION SYSTEM	43.00
					Total :	**85.99**
174200	11/28/2023	111778 SPCALA	202310	032-00143	ANIMAL SHELTER SERVICES	10,338.13
					Total :	**10,338.13**
174201	11/28/2023	104126 SPECTRUM	0027122111123		CABLE & BACKUP INTERNET SERVICE	4,138.56
			081122111223		CABLE SERVICES - PD	83.54
					Total :	**4,222.10**

Bank code : usb

Voucher	Date	Vendor	Invoice	PO #	Description/Account	Amount
174202	11/28/2023	112318 SUB ZERO ICE CREAM-CALIFORNIA,, LLC	321		CATERING SERVICES - GTRANS ANNU	965.25
					Total :	**965.25**
174203	11/28/2023	104106 SWARCO MCCAIN, INC.	INV0276035	024-00986	SIGNS/SIGNALS SUPPLIES	1,449.75
					Total :	**1,449.75**
174204	11/28/2023	220593 TANAKA, RODNEY G.	10/30-11/04		ICHIKAWA SISTER CITY TRIP	375.00
					Total :	**375.00**
174205	11/28/2023	100609 TANK SPECIALISTS OF CALIFORNIA	33151		CERTIFIED DESIGNATED OPERATOR S	925.00
			33154		PRESSURE LEAK TESTING	1,875.00
			33169		CERTIFIED DESIGNATED OPERATOR S	198.00
					Total :	**2,998.00**
174206	11/28/2023	107928 TELECOM LAW FIRM, P.C.	16327		PROFESSIONAL SERVICES - 14335 S. \	2,676.00
					Total :	**2,676.00**
174207	11/28/2023	105584 TRE PRINTING	3321		PD FIELD SUPPLIES	421.30
					Total :	**421.30**
174208	11/28/2023	112306 TRESCO INDUSTRIES LTD	5320	037-10198	DISPATCH CONSOLES	48,932.67
			5330	037-10198	DISPATCH CONSOLES	1,050.00
					Total :	**49,982.67**
174209	11/28/2023	105556 TRIANGLE SPORTS, INC.	42230		YOUTH SPORTS UNIFORMS	72.27
			42242		REC SPORTS SUPPLIES	919.80
					Total :	**992.07**
174210	11/28/2023	111481 TRIO COMMUNITY MEALS, LLC	A70410157I		SENIOR FEEDING PROGRAM	244.20
			A70410159I		SENIOR FEEDING PROGRAM	230.10
			A70410160I		SENIOR FEEDING PROGRAM	281.75
			A70410161I		SENIOR FEEDING PROGRAM	112.70
			A704110158I		SENIOR FEEDING PROGRAM	239.50
			INV2230037082	034-00584	SENIOR FEEDING PROGRAM	3,507.91
			INV2230037083	034-00584	SENIOR FEEDING PROGRAM	2,499.10
			INV2230037551	034-00584	SENIOR FEEDING PROGRAM	5,372.23
					Total :	**12,487.49**

Bank code : usb

Voucher	Date	Vendor	Invoice	PO #	Description/Account	Amount
174211	11/28/2023	112445 TSUJIUCHI, GREG	10/30-11/04		ICHIKAWA SISTER CITY TRIP	375.00
					Total :	**375.00**
174212	11/28/2023	109900 U.S. BANK CORPORATE PAYMENT, SYSTEMS	OROZCO 10/23/23		CAL CARD STATEMENT 09/23-10/23/23	14,949.95
					Total :	**14,949.95**
174213	11/28/2023	109900 U.S. BANK CORPORATE PAYMENT, SYSTEMS	RECREATION 10/23/23		CAL CARD STATEMENT 09/23-10/23/23	13,895.28
				034-00629		
					Total :	**13,895.28**
174214	11/28/2023	104692 ULINE	169457842		PD PROGRAM SUPPLIES	317.60
					Total :	**317.60**
174215	11/28/2023	121275 UNDERGROUND SERVICE ALERT, OF SC	1020230287		NEW TICKETS	235.75
			23-241389		STATE REGULATORY COSTS - BILLABL	55.67
					Total :	**291.42**
174216	11/28/2023	112234 UNITED PACIFIC, APRO LLC	090123-093023		PD CAR WASH	104.00
					Total :	**104.00**
174217	11/28/2023	111719 WALLACE & ASSOCIATES, CONSULTING, INC	16775	037-10212	CONSTRUCTION MGMT FOR DISPATCH	2,754.00
			20141	037-10212	DISPATCH REMODELING PROJECT, JN	21,552.00
			W801059	024-00870	FIRE STATION ROOF REPLACEMENT, J	10,320.00
					Total :	**34,626.00**
174218	11/28/2023	108353 WALTERS WHOLESALE ELECTRIC CO	S124209830		BLDG MAINT SUPPLIES	388.63
			S124265234		BLDG MAINT SUPPLIES	558.97
			S124341031		BLDG MAINT SUPPLIES	708.91
					Total :	**1,656.51**
174219	11/28/2023	101903 WATER TECHNIQUES	6912		DRINKING WATER SYSTEM RENTAL	45.00
					Total :	**45.00**
174220	11/28/2023	104107 WAXIE SANITARY SUPPLY	82102454		BUS WASH SUPPLIES	198.01
					Total :	**198.01**
174221	11/28/2023	110370 WESTERN COLLISION CENTER, INC	1118	035-01280	2015 CHEV TAHOE #7HED092 REPAIRS	410.52
			1123	035-01280	2023 FORD EXPLORER #B46945 DOOR	246.52

Bank code : usb

Voucher	Date	Vendor	Invoice	PO #	Description/Account	Amount
174221	11/28/2023	110370 WESTERN COLLISION CENTER, INC	(Continued)			
			1126	035-01280	2022 FORD INTRCPT #1630468 WINDO	452.03
			1130	035-01280	2021 FORD EXPLORER #1608913 REPA	315.09
					Total :	**1,424.16**
174222	11/28/2023	123050 WILLIAMS SCOTSMAN, INC.	9019216792	035-01288	MODULAR BUILDING RENTAL CPX-804	2,445.12
					Total :	**2,445.12**
174223	11/28/2023	125001 YAMADA COMPANY, INC.	83665		PARK MAINT SUPPLIES	91.61
			83681		PARK MAINT SUPPLIES	336.99
					Total :	**428.60**

131 Vouchers for bank code : usb **Bank total :** **893,270.71**

131 Vouchers in this report **Total vouchers :** **893,270.71**

Bank code : usb

Voucher	Date	Vendor	Invoice	PO #	Description/Account	Amount

CLAIMS VOUCHER APPROVAL

I hereby certify that the demands or claims covered by the checks listed on pages 1 to 14 inclusive of the check register are accurate and funds are available for payment thereof.

By: _____
Director of Administrative Services

This is to certify that the claims or demands covered by checks listed on pages 1 to 14 inclusive of the check register have been audited by the City Council of the City of Gardena and that all of the said checks are approved for payment except check numbers:

_____

_____ 11/28/2023
Mayor Date

_____ _____
Councilmember Date

_____ _____
Councilmember Date

Acknowledged:

_____ _____
Councilmember Date

_____ _____
Councilmember Date

MEMORANDUM

TO: Honorable Mayor and City Council

FROM: City Treasurer's Office

DATE: December 7, 2023

SUBJECT: WARRANT REGISTER
PAYROLL REGISTER

December 12, 2023	TOTAL WARRANTS ISSUED:	$2,495,600.68

Wire Transfer: 12586
Prepay: 174224-174225
Check Numbers: 174226-174389
Checks Voided:

Total Pages of Register: 17

December 1, 2023	TOTAL PAYROLL ISSUED:	$1,840,988.18

for _____
Guy Mato, City Treasurer

Bank code : usb

Voucher	Date	Vendor	Invoice	PO #	Description/Account	Amount
12586	11/16/2023	111374 LINCOLN NATIONAL LIFE, INSURANCE COMPA	4614115934	023-01489	LIFE INSURANCE GRP PLANS	3,140.11
					Total :	**3,140.11**
174224	11/30/2023	112323 ELITE SPECIAL EVENTS, INC.	127 BAL	034-00603	WINTER WONDERLAND 2023 SUPPLIE	4,338.00
					Total :	**4,338.00**
174225	11/30/2023	110972 SOUTH BAY CASINO RENTALS	120323	037-10301	RENTAL - GTRANS 2023 AWARDS EVEI	3,600.00
					Total :	**3,600.00**
174226	12/12/2023	107751 A-A BACKFLOW TESTING &, MAINTENANCE	84523		GTRANS MAINT SUPPLIES	370.00
					Total :	**370.00**
174227	12/12/2023	106086 ABC COMPANIES	3573675		GTRANS AUTO PARTS	1,759.13
					Total :	**1,759.13**
174228	12/12/2023	105149 ADAMSON POLICE PRODUCTS	INV402149	035-01303	PD TACTICAL EQUIPMENT & SUPPLIES	6,867.80
					Total :	**6,867.80**
174229	12/12/2023	101602 ADLERHORST INTERNATIONAL, LLC	110119	035-01299	BASIC HANDLERS COURSE	5,700.00
					Total :	**5,700.00**
174230	12/12/2023	101748 AFTERMARKET PARTS COMPANY LLC, THE	1321894		GTRANS AUTO PARTS	391.10
			83203211	037-10275	GTRANS AUTO PARTS	76.02
			83206204	037-10275	GTRANS AUTO PARTS	62.63
			83214149	037-10275	GTRANS AUTO PARTS	628.21
			83215236	037-10275	GTRANS AUTO PARTS	80.62
					Total :	**1,238.58**
174231	12/12/2023	102730 ALL PRO SIGNS, INC.	13083	035-01301	SWAT WALL PROJECT	2,405.40
					Total :	**2,405.40**
174232	12/12/2023	110183 ALLIANT INSURANCE SERVICES, INC.	2489362		SPECIAL EVENT LIABILITY INSURANCE	357.00
					Total :	**357.00**
174233	12/12/2023	112571 AMBIT CONSTRUCTION &, DESIGN, INC.	1455 11/06/23	037-10241	GTRANS DISPATCH REMODELING PRC	52,482.75
					Total :	**52,482.75**

Bank code : usb

Voucher	Date	Vendor	Invoice	PO #	Description/Account	Amount
174234	12/12/2023	112697 AMERICAN FILM INSTITUTE	PERMIT #17964		PERMIT DEPOSIT REFUND - 14948 CRE	1,000.00
					Total :	**1,000.00**
174235	12/12/2023	100925 AMERICAN MOVING PARTS	01A151173		GTRANS AUTO PARTS	110.92
					Total :	**110.92**
174236	12/12/2023	112640 ARELLANO ASSOCIATES, LLC	20472	037-10284	MICROTRANSIT SERVICE COMMUNITY	2,808.93
					Total :	**2,808.93**
174237	12/12/2023	104687 AT&T	20824261		TELEPHONE	211.00
			20894128		TELEPHONE	370.93
					Total :	**581.93**
174238	12/12/2023	102880 AUTOPLEX, INC.	15625		2005 CHEV TAHOE #1096948 COOLANT	353.44
					Total :	**353.44**
174239	12/12/2023	109824 AXON ENTERPRISE INC.	INUS184196	035-01296	BODY WORN CAMERA ANNUAL SERVI	79,858.44
					Total :	**79,858.44**
174240	12/12/2023	110686 AZTECH ELEVATOR COMPANY	AZ18162	037-10244	ELEVATOR MAINTENANCE - GTRANS	83.33
			AZ18163	037-10244	ELEVATOR MAINTENANCE - GTRANS	285.00
			AZ18164		ELEVATOR MAINTENANCE - CH	100.00
			AZ18165	024-00958	ELEVATOR MAINTENANCE - NCC	285.00
			AZ18166	024-00958	ELEVATOR MAINTENANCE - NCC	100.00
			AZ181967		ELEVATOR MAINTENANCE - PW	285.00
					Total :	**1,138.33**
174241	12/12/2023	110929 BADEA, JONEL	50020-0707		PERMIT DEPOSIT REFUND - 2713 W 14	5,000.00
					Total :	**5,000.00**
174242	12/12/2023	103641 BECNEL UNIFORMS	63766		BUS UNIFORM SUPPLIES	545.22
			63767		BUS UNIFORM SUPPLIES	414.95
					Total :	**960.17**
174243	12/12/2023	104302 BEE N' WASP NEST REMOVAL, SERVICE, LLC	958056		HONEY BEE NEST REMOVAL - 1544S. H	124.00
					Total :	**124.00**
174244	12/12/2023	102135 BEHRENDS, KENT	222	023-01474	IT NETWORK SUPPORT - DECEMBER 2	3,400.00

Bank code : usb

Voucher	Date	Vendor	Invoice	PO #	Description/Account	Amount
174244	12/12/2023	102135 102135 BEHRENDS, KENT	(Continued)		**Total :**	**3,400.00**
174245	12/12/2023	111770 BLENDMAGIC PRODUCTS	1214		SEWER PROGRAM SUPPLIES	1,374.00
					Total :	**1,374.00**
174246	12/12/2023	111875 BOA ARCHITECTURE	DEMOSERV-1	024-00892	CHASE BANK BLDG DEMO, JN 505	15,350.00
					Total :	**15,350.00**
174247	12/12/2023	112700 BULMER, DERRICK	50021-0802		PERMIT DEPOSIT REFUND - 1929 W 14	5,000.00
					Total :	**5,000.00**
174248	12/12/2023	103923 CALIFORNIA TRANSIT ASSOCIATION	15577	037-10302	PUBLIC TRANSIT SYSTEM MEMBERSH	11,000.00
					Total :	**11,000.00**
174249	12/12/2023	803420 CARPENTER, ROTHANS & DUMONT, LAW OFF	44971		LEGAL SERVICES	309.12
			44972		LEGAL SERVICES	378.00
			44973		LEGAL SERVICES	4,661.20
			44975		LEGAL SERVICES	486.00
			44976		LEGAL SERVICES	284.40
			44977		LEGAL SERVICES	561.30
			44979		LEGAL SERVICES	226.80
			44982		LEGAL SERVICES	976.20
			44983		LEGAL SERVICES	108.00
					Total :	**7,991.02**
174250	12/12/2023	110605 CHANDLER ASSET MANAGEMENT	2310GARDENA	013-00031	INVESTMENT MGMT SERVICES - OCTC	2,498.38
					Total :	**2,498.38**
174251	12/12/2023	112687 CHAVEZ, PAULINA	60848878		MAINTENANCE DEPOSIT REFUND	100.00
					Total :	**100.00**
174252	12/12/2023	312105 CITY OF LOS ANGELES	BR600532	024-01011	PERMIT - TRAFFIC SIGNAL IMP PROJE	27,336.73
					Total :	**27,336.73**
174253	12/12/2023	111534 CLEAN ENERGY	CE112634810	037-10282	GTRANS OFFSITE CNG FUELING SERV	52,785.94
					Total :	**52,785.94**
174254	12/12/2023	111740 CLEANCOR LNG LLC	S-INV102046		QUARTERLY PREVENTATIVE MAINT	846.39

Bank code : usb

Voucher	Date	Vendor	Invoice	PO #	Description/Account	Amount
174254	12/12/2023	111740 111740 CLEANCOR LNG LLC	(Continued)		**Total :**	**846.39**
174255	12/12/2023	110215 CLEVER DEVICES LTD	PI00014962	037-09906	PURCHASE AND INSTALLATION OF GR	129,697.13
					Total :	**129,697.13**
174256	12/12/2023	110215 CLEVER DEVICES LTD	PI00015112	037-09906	PURCHASE AND INSTALLATION OF GR	22,340.00
					Total :	**22,340.00**
174257	12/12/2023	110215 CLEVER DEVICES LTD	PI00014959	037-09906	PURCHASE AND INSTALLATION OF GR	22,340.00
					Total :	**22,340.00**
174258	12/12/2023	110215 CLEVER DEVICES LTD	PI00014996	037-09906	PURCHASE AND INSTALLATION OF GR	4,746.26
			PI00016076	037-09906	PURCHASE AND INSTALLATION OF GR	11,605.00
					Total :	**16,351.26**
174259	12/12/2023	110122 COMMANDSTAT ANALYTICS, INC	229	035-01297	DATABASE MGMT & REPORTING PREP	2,016.00
					Total :	**2,016.00**
174260	12/12/2023	111708 COMMLINE, INC.	0429052		DIGITAL BUS RADIO SYSTEM PURCHA	45.00
					Total :	**45.00**
174261	12/12/2023	103465 COMMUNITY VETERINARY HOSPITAL	503771	035-01302	VETERINARY SERVICES - VITO	2,080.75
					Total :	**2,080.75**
174262	12/12/2023	102895 CONSOLIDATED DESIGN WEST	0439687		CITY EVENT BANNER SUPPLIES	2,185.78
					Total :	**2,185.78**
174263	12/12/2023	103353 CRM COMPANY, LLC.	LA23903		SCRAP TIRE DISPOSAL FEE	69.50
					Total :	**69.50**
174264	12/12/2023	106193 CUMMINS SALES AND SERVICE	X4-43197		GTRANS AUTO PARTS	2,148.75
			X4-43256		GTRANS AUTO PARTS	-139.73
					Total :	**2,009.02**
174265	12/12/2023	110319 CWE DIRECTOR	23489	024-00766	MS4 & NPDES MONITORING & COMPLI	1,987.50
			23491	024-00846	MS4 & NPDES MONITORING & COMPLI	521.00
					Total :	**2,508.50**

Bank code : usb

Voucher	Date	Vendor	Invoice	PO #	Description/Account	Amount
174266	12/12/2023	104736 D&R OFFICE WORKS, INC.	0129235	035-01295	PD OFFICE FURNTIURE	9,248.61
			0130128	037-10197	GTRANS OPERATIONS OFFICE FURNIT	700.00
					Total :	**9,948.61**
174267	12/12/2023	111938 DANDOY GLASS	21311		WINDOW GLASS REPLACEMENT - MAS	1,950.00
					Total :	**1,950.00**
174268	12/12/2023	111425 DE LA ROSA, CHRISTOPHER	GEPCO		GEPCO LOAN	2,000.00
					Total :	**2,000.00**
174269	12/12/2023	312117 DEPARTMENT OF WATER & POWER	112123		LIGHT & POWER	101.44
					Total :	**101.44**
174270	12/12/2023	111452 DRAW TAP GIS, LLC	2023GAR-0019	032-00145	CONSULTANT SERVICES - PUBLISH HC	236.25
					Total :	**236.25**
174271	12/12/2023	112702 DREGER, ROGER	50022-1376		PERMIT DEPOSIT REFUND - 15433 SPI	5,000.00
					Total :	**5,000.00**
174272	12/12/2023	111973 DUDEK	202308838	032-00101	PROFESSIONAL SERVICES - INSITE	29,083.75
			202309506	032-00101	PROFESSIONAL SERVICES - INSITE - 1	425.00
					Total :	**29,508.75**
174273	12/12/2023	110534 EL DORADO NATIONAL	90826708	037-10128	GTRANS BUS VEHICLE SUPPLIES	40,984.05
			90828534		GTRANS BUS VEHICLE SUPPLIES	597.58
			90829329	037-10171	GTRANS BUS VEHICLE SUPPLIES	2,693.30
			90829331	037-10171	GTRANS BUS VEHICLE SUPPLIES	21.77
			90829337	037-10128	GTRANS BUS VEHICLE SUPPLIES	2,264.75
			90829382	037-10171	GTRANS BUS VEHICLE SUPPLIES	1,077.76
			90830003	037-10171	GTRANS BUS VEHICLE SUPPLIES	658.47
			90830054		GTRANS BUS VEHICLE SUPPLIES	60.91
			90830081	037-10128	GTRANS BUS VEHICLE SUPPLIES	5,338.72
			90830083		GTRANS BUS VEHICLE SUPPLIES	1,705.90
					Total :	**55,403.21**
174274	12/12/2023	100898 ESPINOZA, JOSE	FALL 2023		EDUCATIONAL REIMBURSEMENT	1,491.00
					Total :	**1,491.00**

Bank code : usb

Voucher	Date	Vendor	Invoice	PO #	Description/Account	Amount
174275	12/12/2023	105650 EWING IRRIGATION PRODUCTS	21061748		PARK MAINT SUPPLIES	953.90
			21061882		PARK MAINT SUPPLIES	350.53
					Total :	**1,304.43**
174276	12/12/2023	106109 FASTSIGNS	0094-113633		PARK MAINT SUPPLIES	611.90
					Total :	**611.90**
174277	12/12/2023	106129 FEDEX	8-313-73952		SHIPPING SERVICES	510.34
					Total :	**510.34**
174278	12/12/2023	111415 FILTERBUY, INC	BAFEC8C7-0017		GTRANS AUTO PARTS	444.31
					Total :	**444.31**
174279	12/12/2023	108974 FLEX TECHNOLOGIES, INC.	45920		GTRANS AUTO PARTS	170.78
					Total :	**170.78**
174280	12/12/2023	112329 FM THOMAS AIR CONDITIONING INC	45964	024-00893	HVAC PREVENTATIVE MAINT SERVICE	19,573.17
					Total :	**19,573.17**
174281	12/12/2023	106465 FOX FIRST AID & SAFETY INC	71472		STREET MAINT SUPPLIES	16.54
			71473		PARK MAINT SUPPLIES	65.05
			71477		STREET MAINT SUPPLIES	16.54
					Total :	**98.13**
174282	12/12/2023	107030 GARDENA AUTO PARTS	174309		PW AUTO PARTS	173.15
			174341		PW AUTO PARTS	18.57
			174540		PW AUTO PARTS	178.38
					Total :	**370.10**
174283	12/12/2023	107011 GARDENA VALLEY NEWS, INC.	00129909		PUBLIC NOTICE - MICROTRANSIT	213.50
			00136428		SUMMARY OF ORDINANCE - CA UNIFO	434.00
			00136562		NOTICE OF PUBLIC HEARING - SP #1-2	301.84
			00136813		SUMMARY OF ORDANCE NO 1859	109.20
			00137114		NOTICE OF PUBLIC HEARING - ORD 18	143.50
			00137165		NOTICE OF AVAILABILITY - EIR	504.00
					Total :	**1,706.04**
174284	12/12/2023	619005 GAS COMPANY, THE	120123		GAS	10,147.28

Bank code : usb

Voucher	Date	Vendor	Invoice	PO #	Description/Account	Amount
174284	12/12/2023	619005 619005 GAS COMPANY, THE	(Continued)		**Total :**	**10,147.28**
174285	12/12/2023	106763 GENERAL INDUSTRIAL TOOL &, SUPPLY	1199933-01		STREET MAINT SUPPLIES	43.66
			1200156-01		STREET MAINT SUPPLIES	480.69
					Total :	**524.35**
174286	12/12/2023	112692 GOCANVAS	INV00149409		MONTHLY SUBSCRIPTION	248.50
					Total :	**248.50**
174287	12/12/2023	619004 GOLDEN STATE WATER CO.	112123		WATER	22,541.81
					Total :	**22,541.81**
174288	12/12/2023	112380 GOLDFARB & LIPMAN LLP	461124	032-00128	AFFORDABLE HOUSING SERVICES	68.00
					Total :	**68.00**
174289	12/12/2023	107513 GRAINGER	9907881628		BUS FACILITY SUPPLIES	364.54
			9908789861		BUS FACILITY SUPPLIES	1,071.84
			9909143662		BUS FACILITY SUPPLIES	19.24
			9909393382		BUS FACILITY SUPPLIES	50.01
			9914281135		BUS FACILITY SUPPLIES	2,038.76
					Total :	**3,544.39**
174290	12/12/2023	112076 HERNANDEZ, ROSA	25		INTERN SERVICES - 11/16-11/29/23	1,176.00
					Total :	**1,176.00**
174291	12/12/2023	108434 HOME DEPOT CREDIT SERVICES	1040250		GTRANS MAINT SUPPLIES	217.54
			1041725		GTRANS MAINT SUPPLIES	471.57
			1052068		STREET MAINT SUPPLIES	206.96
			1055908		YOUTH SPORTS PROGRAM SUPPLIES	95.21
			1310069		PARK MAINT SUPPLIES	59.06
			1342587		BLDG MAINT SUPPLIES	166.08
			2342781		BLDG MAINT SUPPLIES	62.97
			2522629		PD PROGRAM SUPPLIES	67.63
			4044950		SIGNS/SIGNALS SUPPLIES	65.57
			4354178		SIGNS/SIGNALS SUPPLIES	43.62
			5510849		PD MAINT SUPPLIES	14.19
			5540896		PARK MAINT SUPPLIES	49.59
			6041015		STREET MAINT SUPPLIES	12.02

Bank code : usb

Voucher	Date	Vendor	Invoice	PO #	Description/Account	Amount
174291	12/12/2023	108434 HOME DEPOT CREDIT SERVICES	(Continued)			
			7024741		REC PROGRAM SUPPLIES	213.31
			8310347		PARK MAINT SUPPLIES	60.27
			8330494		BLDG MAINT SUPPLIES	33.31
			8521591		PD MAINT SUPPLIES	119.36
			8535027		PD MAINT SUPPLIES	82.48
					Total :	**2,040.74**
174292	12/12/2023	110222 INTERAMERICAN MOTOR, LLC	065-433872		GTRANS AUTO PARTS	21.43
			101-229864		GTRANS AUTO PARTS	437.58
			101-674448		GTRANS AUTO PARTS	599.39
			110-675596		GTRANS AUTO PARTS	103.33
			110-676302		GTRANS AUTO PARTS	81.08
			110-676517		GTRANS AUTO PARTS	38.53
			110-678055		GTRANS AUTO PARTS	49.23
			116520401		GTRANS AUTO PARTS	103.33
			116-520913		GTRANS AUTO PARTS	81.08
			62655534		GTRANS AUTO PARTS	29.71
					Total :	**1,544.69**
174293	12/12/2023	111593 INTER-CON SECURITY SYSTEMS INC	BD0280783	037-10211	GTRANS SECURITY SERVICES - SEPTI	6,254.82
					Total :	**6,254.82**
174294	12/12/2023	106714 INTERSTATE BATTERIES OF, CALIFORNIA CO.	140077690		GTRANS AUTO PARTS	1,267.47
			140077852		GTRANS AUTO PARTS	1,267.47
					Total :	**2,534.94**
174295	12/12/2023	103064 ITERIS, INC.	164040	024-00971	CONSULTANT SERVICES - ITS MASTEF	8,287.00
					Total :	**8,287.00**
174296	12/12/2023	110733 J & S PROPERTY MANAGEMENT AND, MAINTI	7843	037-10304	LANDSCAPE MAINTENANCE SERVICE	2,112.66
			7929	037-10304	LANDSCAPE MAINTENANCE SERVICE	2,112.66
					Total :	**4,225.32**
174297	12/12/2023	110853 JONES & MAYER	119152		ATTORNEY SERVICES	5,073.80
			119159		ATTORNEY SERVICES	7,666.49
					Total :	**12,740.29**

Bank code : usb

Voucher	Date	Vendor	Invoice	PO #	Description/Account	Amount
174298	12/12/2023	211429 KEMP, TAMARA	OCT-NOV 2023		DANCE INSTRUCTOR	1,485.00
					Total :	**1,485.00**
174299	12/12/2023	110385 KIMLEY-HORN AND ASSOCIATES, INC	26254832	032-00142	DEVELOPMENT SERVICES - 1610 ARTE	20,865.09
			26485389	032-00142	DEVELOPMENT SERVICES - 1610 ARTE	6,563.65
					Total :	**27,428.74**
174300	12/12/2023	111260 KJOS, BARBARA JEAN	NOVEMBER 2023		GARDENA FAMILY CHILD CARE PROGF	403.00
					Total :	**403.00**
174301	12/12/2023	112357 KLASSIC ENGINEERING &, CONSTRUCTION II	102623	024-00902	FIRE STATION #158 ROOF REPLACEME	5,291.87
					Total :	**5,291.87**
174302	12/12/2023	111813 KWIK FLASH PHOTO	12212023		PHOTOGRAPHY SERVICES - WINTER C	600.00
					Total :	**600.00**
174303	12/12/2023	312240 L.A. COUNTY DEPARTMENT OF, PUBLIC WOR	23110602537	024-00988	INDUSTRIAL WASTE SERVICES	7,822.76
			23110602839	024-00988	LABOR & EQUIPMENT CHARGES - TS M	1,750.92
					Total :	**9,573.68**
174304	12/12/2023	312039 L.A. COUNTY FIRE DEPARTMENT	C0011700	023-01468	FIRE PROTECTION SERVICES - JANUA	980,628.52
					Total :	**980,628.52**
174305	12/12/2023	105874 LAWSON PRODUCTS, INC.	9311080140		BUS SHOP SUPPLIES	758.73
			9311087430		BUS SHOP SUPPLIES	189.07
			9311095476		BUS SHOP SUPPLIES	418.95
					Total :	**1,366.75**
174306	12/12/2023	108333 LIFELINE RESCUE	68872	024-00992	CPR/FIRST AID TRAINING	2,100.00
					Total :	**2,100.00**
174307	12/12/2023	109517 LOAD N' GO BUILDING MATERIALS	28212		PD MEMORIAL SIGN	30.86
			28231		PD MEMORIAL SIGN	178.58
			28241		PD MEMORIAL SIGN	80.98
					Total :	**290.42**
174308	12/12/2023	111096 LOPEZ, VICTOR	50022-0429		PERMIT DEPOSIT REFUND - 13114 S C/	7,500.00

Bank code : usb

Voucher	Date	Vendor	Invoice	PO #	Description/Account	Amount
174308	12/12/2023	111096 111096 LOPEZ, VICTOR	(Continued)		**Total :**	**7,500.00**
174309	12/12/2023	112308 LOS ANGELES HOMPA HONGWANJI, BUDDHIS	112723		ENTERTAINMENT SERVICES - CANDLE	300.00
					Total :	**300.00**
174310	12/12/2023	109563 LUCKY LADY CASINO	08500000220		ECONOMIC ASSISTANCE - TPPP FEE	62,775.00
					Total :	**62,775.00**
174311	12/12/2023	112615 LU'S LIGHTHOUSE, INC.	01254407	037-10271	GTRANS SHOP SUPPLIES	125.02
					Total :	**125.02**
174312	12/12/2023	112326 LWP CLAIMS SOLUTIONS INC.	21968	023-01488	WORKERS' COMP CLAIMS ADMINISTRA	23,786.74
					Total :	**23,786.74**
174313	12/12/2023	112326 LWP CLAIMS SOLUTIONS INC.	22053	023-01488	WORKERS' COMP CLAIMS ADMINISTRA	21,286.66
					Total :	**21,286.66**
174314	12/12/2023	112701 MAEDA, SAMANTHA	PERMIT #17977		PERMIT DEPOSIT REFUND - 16926 S H	500.00
					Total :	**500.00**
174315	12/12/2023	105082 MAJESTIC LIGHTING, INC.	ML85740	037-10255	GTRANS MAINT SUPPLIES	3,704.40
			ML86553		PD MEMORIAL SIGN	72.61
					Total :	**3,777.01**
174316	12/12/2023	113036 MANERI SIGN CO., INC.	40015304		SIGNS - 24"X30" "K9 TRAINING IN PROC	617.40
			40015377		SIGNS - 30X30 GARDENA/YARD	717.51
			40015378		SIGN - 18X24 "STREET SWEEPING"	1,838.54
			40015408		SIGN - 12X18 "STREET SWEEPING"	789.94
					Total :	**3,963.39**
174317	12/12/2023	813030 MANNING & KASS	786720		LEGAL SERVICES	296.61
					Total :	**296.61**
174318	12/12/2023	110306 MARIPOSA LANDSCAPES, INC	3175	024-00987	MEDIAN LANDSCAPE MAINTENANCE	1,236.00
					Total :	**1,236.00**
174319	12/12/2023	113064 MCMASTER-CARR SUPPLY COMPANY	16879631		GTRANS SHOP SUPPLIES	313.16
			16949923		GTRANS SHOP SUPPLIES	717.31

Bank code : usb

Voucher	Date	Vendor	Invoice	PO #	Description/Account	Amount
174319	12/12/2023	113064 MCMASTER-CARR SUPPLY COMPANY	(Continued)			
			172696229		GTRANS SHOP SUPPLIES	170.90
			17726882		GTRANS SHOP SUPPLIES	193.71
					Total :	**1,395.08**
174320	12/12/2023	112524 MDG ASSOCIATES, INC.	17968	032-00139	CDBG ADMINISTRATION - OCTOBER 2(	446.00
					Total :	**446.00**
174321	12/12/2023	112044 MEA FORENSIC ENGINEERS &, SCIENTISTS, I	S126118		PROFESSIONAL SERVICES	7,160.98
					Total :	**7,160.98**
174322	12/12/2023	113299 MERRIMAC ENERGY GROUP	2228052	024-00964	87 OCTANE REGULAR UNLEADED FUE	25,374.38
					Total :	**25,374.38**
174323	12/12/2023	108699 MEZIERE ENTERPRISES INC.	100167		ELECTRIC WATER PUMP	635.96
					Total :	**635.96**
174324	12/12/2023	112704 MILLER, MIYANA	62759906		MAINT DEPOSIT REFUND	250.00
					Total :	**250.00**
174325	12/12/2023	104152 MODEL 1 COMMERCIAL, VEHICLES, INC.	XA128015549		GTRANS AUTO PARTS	22.35
					Total :	**22.35**
174326	12/12/2023	113605 MUTUAL LIQUID GAS & EQUIPMENT, CO., INC	699665		PROPANE GAS	193.34
					Total :	**193.34**
174327	12/12/2023	105622 N/S CORPORATION	0119729	037-10249	GTRANS BUS WASH EQUIPMENT MAIN	586.00
					Total :	**586.00**
174328	12/12/2023	112375 NAGASAKI & ASSOCIATES	23-1581	032-00149	APPRAISAL SERVICES	5,000.00
					Total :	**5,000.00**
174329	12/12/2023	111370 NV5 INC.	357348	024-00911	CONSULTING SERVICES - ARTESIA LAI	3,000.00
					Total :	**3,000.00**
174330	12/12/2023	110575 OCCUPATIONAL HEALTH CENTERS, OF CALIF	81187872	023-01486	RANDOM TESTS	433.00
			81189654		RANDOM TESTS	174.00
			81263867		RANDOM TESTS	936.00

Bank code : usb

Voucher	Date	Vendor	Invoice	PO #	Description/Account	Amount
174330	12/12/2023	110575 110575 OCCUPATIONAL HEALTH CENTERS, OF ((Continued)			**Total :**	**1,543.00**
174331	12/12/2023	111358 O'REILLY AUTO PARTS	381727		GTRANS AUTO PARTS	143.21
			382331		PW AUTO PARTS	104.19
			382735		GTRANS AUTO PARTS	65.26
			384092		PW AUTO PARTS	108.29
			385515		GTRANS AUTO PARTS	120.19
			386266		GTRANS AUTO PARTS	293.18
			389503		GTRANS AUTO PARTS	826.96
					Total :	**1,661.28**
174332	12/12/2023	115810 ORKIN PEST CONTROL	252070903		PEST CONTROL - ACCT #27336703	283.99
					Total :	**283.99**
174333	12/12/2023	112705 ORNELAS, TANYA	56545322		REFUND - YOUTH BASEBALL	60.00
					Total :	**60.00**
174334	12/12/2023	112688 OUTLAW GRAPHIX INC.	10822	035-01298	2023 FORD INTERCEPTOR ROOF	3,832.33
					Total :	**3,832.33**
174335	12/12/2023	110403 PENN RECORDS MANAGEMENT	0139485		OFF-SITE STORAGE SERVICES - NOVE	61.75
					Total :	**61.75**
174336	12/12/2023	112189 PERFECT SCORE ATHLETIC, TRAINING CENT	11/06-11/29/23		GYMNASTICS INSTRUCTOR SERVICES	7,726.50
					Total :	**7,726.50**
174337	12/12/2023	116140 PETE'S ROAD SERVICE, INC.	715985		SERVICE CALL - UNIT #48 #1490023	270.79
					Total :	**270.79**
174338	12/12/2023	307101 PETTY CASH FUND	10/02-11/15		REPLENISH PETTY CASH	1,047.22
					Total :	**1,047.22**
174339	12/12/2023	307108 PETTY CASH FUND	07/18-11/15/23		REPLENISH PETTY CASH	327.16
					Total :	**327.16**
174340	12/12/2023	108600 PHOENIX GROUP INFORMATION, SYSTEMS	1020231211	035-01283	PARKING CONTRACT SERVICES - OCT	36.00
					Total :	**36.00**

Bank code : usb

Voucher	Date	Vendor	Invoice	PO #	Description/Account	Amount
174341	12/12/2023	116225 PLUMBERS DEPOT, INC.	PD-54872		SEWER PROGRAM SUPPLIES	474.42
					Total :	**474.42**
174342	12/12/2023	112272 PROFESSIONAL DEVELOPMENT, ACADEMY	121427		ICMA LEADERSHIP ACADEMY	1,895.00
					Total :	**1,895.00**
174343	12/12/2023	106092 PRUDENTIAL OVERALL SUPPLY	4227678	024-01006	UNIFORM & SUPPLY RENTAL	165.60
			42883645	024-01006	UNIFORM & SUPPLY RENTAL	162.23
			42885566	034-00616	UNIFORM & SUPPLY RENTAL	41.46
			42885567	034-00616	SUPPLY RENTAL - MATS - GTRANS	50.10
			42887197	037-10280	SUPPLY RENTAL - MATS - GTRANS	930.51
			42889249	037-10280	SUPPLY RENTAL - MATS - GTRANS	341.76
					Total :	**1,691.66**
174344	12/12/2023	116820 PSOMAS	202577	037-09987	GTRANS DESIGN BUILD CONSTRUCTI(	5,368.00
					Total :	**5,368.00**
174345	12/12/2023	112508 PUMPMAN LLC	801846	024-00937	PUMP SYSTEM BI-ANNUAL MAINTENAI	1,800.00
					Total :	**1,800.00**
174346	12/12/2023	104901 Q-20 ENTERTAINMENT	23-1220		DJ SERVICES - EMPLOYEE HOLIDAY E'	500.00
			23-1221		DJ SERVICES - WINTER GALA	300.00
					Total :	**800.00**
174347	12/12/2023	117603 QUALITY MEDICAL SERVICE	24342		BUS FIRST AID SUPPLIES	470.17
					Total :	**470.17**
174348	12/12/2023	102283 QUICK COLOR PRINTING	16025		REC PROGRAM SUPPLIES	413.44
			16106		YOUTH SPORT BANNERS	826.88
			16110		GTRANS - BANNERS	38.59
					Total :	**1,278.91**
174349	12/12/2023	112696 REMIREZ, LUIS	50021-0580		PERMIT DEPOSIT REFUND - 16014 S M	7,500.00
					Total :	**7,500.00**
174350	12/12/2023	112433 RIGHTWAY HEALTHCARE, INC	INV15358	023-01485	HEALTHCARE NAVIGATION SERVICES	1,810.25
					Total :	**1,810.25**

Bank code : usb

Voucher	Date	Vendor	Invoice	PO #	Description/Account	Amount
174351	12/12/2023	111867 RJM DESIGN GROUP	36090	034-00588	PARKS MASTER PLAN	35,496.79
					Total :	**35,496.79**
174352	12/12/2023	111627 ROSS, KENNETH	62207052		REFUND - HOLIDAY BOUTIQUE	65.00
					Total :	**65.00**
174353	12/12/2023	119022 SAFE MART OF SOUTHERN, CALIFORNIA, INC	397		REC PROGRAM SUPPLIES	81.70
					Total :	**81.70**
174354	12/12/2023	219364 SAFFELL, MICHAEL	10/30-11/04		ICHIKAWA SISTER CITY TRIP	375.00
					Total :	**375.00**
174355	12/12/2023	108583 SALDANA, VICTOR	08/01-07/31/24		EDUCATIONAL REIMBURSEMENT	1,690.00
					Total :	**1,690.00**
174356	12/12/2023	112327 SAMI'S REFEREES LLC	11/16-11/30/23		SPORT REFEREE SERVICES	240.00
					Total :	**240.00**
174357	12/12/2023	119016 SAM'S CLUB	6948		PARK MAINT SUPPLIES	197.41
					Total :	**197.41**
174358	12/12/2023	108745 SASE COMPANY, INC.	INV330472	024-01015	SASE VACUUM BULL 300	7,349.12
					Total :	**7,349.12**
174359	12/12/2023	108654 SECTRAN SECURITY INC.	23110838		ARMORED TRANSPORTATION SERVICI	834.93
			23110839		ARMORED TRANSPORTATION SERVICI	249.35
					Total :	**1,084.28**
174360	12/12/2023	107006 SHAMROCK COMPANIES	2732684		PW MAINT SUPPLIES	13.07
			2736090		SIGNS/SIGNALS SUPPLIES	13.24
					Total :	**26.31**
174361	12/12/2023	119233 SHERWIN-WILLIAMS CO.	5454-6		STREET MAINT SUPPLIES	30.61
			7673-6		PD MEMORIAL SIGN	36.32
					Total :	**66.93**
174362	12/12/2023	109918 SHIGE'S FOREIGN CAR SERVICE, INC.	8095487	035-01282	2017 FORD INTRCPT #1368929 CATALY	1,205.37

Bank code : usb

Voucher	Date	Vendor	Invoice	PO #	Description/Account	Amount
174362	12/12/2023	109918 109918 SHIGE'S FOREIGN CAR SERVICE, INC. (Continued)			**Total :**	**1,205.37**
174363	12/12/2023	110972 SOUTH BAY CASINO RENTALS	120123		RENTAL - EMPLOYEE HOLIDAY EVENT	3,645.00
					Total :	**3,645.00**
174364	12/12/2023	119447 SOUTH BAY FORD	517290		2020 FORD EXPLR #B66349 SERVICE &	512.50
					Total :	**512.50**
174365	12/12/2023	619003 SOUTHERN CALIFORNIA EDISON	112923		LIGHT & POWER	45,445.99
					Total :	**45,445.99**
174366	12/12/2023	103202 SOUTHERN COUNTIES LUBRICANTS, LLC	193649		BUS AUTOMOTIVE FLUIDS	1,861.57
			193998		BUS AUTOMOTIVE FLUIDS	1,587.32
					Total :	**3,448.89**
174367	12/12/2023	108238 SPARKLETTS	15638236 120123		DRINKING WATER FILTRATION SYSTEM	43.00
					Total :	**43.00**
174368	12/12/2023	119548 ST. JOHN LUTHERAN CHURCH	DECEMBER 2023		SENIOR CITIZENS DAY CARE	1,100.00
					Total :	**1,100.00**
174369	12/12/2023	112698 SWARTZ, STACY	50023-0838-41		PERMIT CANCELLATION REFUND	1,996.80
					Total :	**1,996.80**
174370	12/12/2023	112505 T Y LIN INTERNATIONAL	102311084	037-10235	SOMPIS PROJECT MANAGEMENT	1,756.95
			102311085	037-10236	GRID PROJECT MANAGEMENT	780.87
					Total :	**2,537.82**
174371	12/12/2023	110238 TIREHUB, LLC	38136850		TIRES - GY EAGLE ENFORCER BW 108	906.66
					Total :	**906.66**
174372	12/12/2023	112699 TIRTASANA, MARTIN	21722		PERMIT CANCELLATION REFUND	286.00
					Total :	**286.00**
174373	12/12/2023	109775 TOMS TRUCK CENTER NORTH COUNTY	1321016	037-10281	GTRANS AUTO PARTS	6,037.69
			1321127	037-10281	GTRANS AUTO PARTS	774.72
			1321523	037-10281	GTRANS AUTO PARTS	210.82
			1321894	037-10281	GTRANS AUTO PARTS	244.69

Bank code : usb

Voucher	Date	Vendor	Invoice	PO #	Description/Account	Amount
174373	12/12/2023	109775 TOMS TRUCK CENTER NORTH COUNTY	(Continued)			
			CM1301208		GTRANS AUTO PARTS	-77.35
			CM1311890		GTRANS AUTO PARTS	-408.68
			CM1314282		GTRANS AUTO PARTS	-77.35
					Total :	**6,704.54**
174374	12/12/2023	104806 TOYOTA LIFT OF L.A.	PSI-0380327		GTRANS AUTO PARTS	214.92
					Total :	**214.92**
174375	12/12/2023	111481 TRIO COMMUNITY MEALS, LLC	INV2230037793	034-00584	SENIOR FEEDING PROGRAM	5,946.97
			INV2230038012	034-00584	SENIOR FEEDING PROGRAM	5,340.10
			INV2230038404	034-00584	SENIOR FEEDING PROGRAM	1,807.96
			INV2230038405	034-00584	SENIOR FEEDING PROGRAM	3,874.20
					Total :	**16,969.23**
174376	12/12/2023	120854 TURF STAR INC.	7308694		PW AUTO PARTS	78.19
			7308694-01		PW AUTO PARTS	655.98
					Total :	**734.17**
174377	12/12/2023	109900 U.S. BANK CORPORATE PAYMENT, SYSTEMS	MACIEL 10/23/23		CAL CARD STATEMENT 09/23-10/23/23	855.92
			NOLAN 10/23/23		CAL CARD STATEMENT 09/23-10/23/23	2,901.03
			PD TRAINING 10/23/23		CAL CARD STATEMENT 09/23-10/23/23	8,267.51
			TRAINING2 10/23/23		CAL CARD STATEMENT 09/23-10/23/23	1,010.37
			TRAINING3 10/23/23		CAL CARD STATEMENT 09/23-10/23/23	1,863.24
			TRAINING4 10/23/23		CAL CARD STATEMENT 09/23-10/23/23	1,234.73
					Total :	**16,132.80**
174378	12/12/2023	104692 ULINE	170471776	024-01010	PW PROGRAM SUPPLIES	2,725.04
					Total :	**2,725.04**
174379	12/12/2023	107596 UNION PACIFIC RAILROAD COMPANY	90129467	024-01007	RR CROSSING IMP ON ARTESIA BLVD	45,047.53
					Total :	**45,047.53**
174380	12/12/2023	103227 UNIPLAN ENGINEERING, INC.	800154-04	024-00981	CMI SERVICES - LOCAL STREET IMPR(	61,716.00
					Total :	**61,716.00**
174381	12/12/2023	106754 URBAN RESTORATION GROUP US, INC.	00040284		STREET MAINT SUPPLIES	1,091.94

Bank code : usb

Voucher	Date	Vendor	Invoice	PO #	Description/Account	Amount
174381	12/12/2023	106754 106754 URBAN RESTORATION GROUP US, INC. (Continued)			**Total :**	**1,091.94**
174382	12/12/2023	122050 VERIZON WIRELESS	9946525482		PW CELL PHONE SERVICE	977.45
					Total :	**977.45**
174383	12/12/2023	111719 WALLACE & ASSOCIATES, CONSULTING, INC	20408	024-00870	FIRE STATION ROOF REPLACEMENT, J	1,215.00
					Total :	**1,215.00**
174384	12/12/2023	108353 WALTERS WHOLESALE ELECTRIC CO	S124209603		PD MEMORIAL SIGN	106.25
			S124236162		PD MEMORIAL SIGN	66.85
			S124277343		PD MEMORIAL SIGN	198.59
			S124365811		BLDG MAINT SUPPLIES	496.14
					Total :	**867.83**
174385	12/12/2023	101195 WASTE RESOURCES GARDENA	112723		WASTE COLLECTION	280,724.50
					Total :	**280,724.50**
174386	12/12/2023	104107 WAXIE SANITARY SUPPLY	82076663		BUS WASH SUPPLIES	650.67
			82082943		BUS WASH SUPPLIES	443.21
			82085818		BUS WASH SUPPLIES	110.80
					Total :	**1,204.68**
174387	12/12/2023	119387 WEX BANK	93012842		FUEL PURCHASE	364.56
					Total :	**364.56**
174388	12/12/2023	125001 YAMADA COMPANY, INC.	83695		PARK MAINT SUPPLIES	131.07
					Total :	**131.07**
174389	12/12/2023	112235 YUNEX LLC	5610000564	024-01014	EMERGENCY REPAIRS - VERMONT & C	2,435.00
					Total :	**2,435.00**
167	**Vouchers for bank code :**	usb			**Bank total :**	**2,495,600.68**
167	**Vouchers in this report**				**Total vouchers :**	**2,495,600.68**

Bank code : usb

Voucher	Date	Vendor	Invoice	PO #	Description/Account	Amount

CLAIMS VOUCHER APPROVAL

I hereby certify that the demands or claims covered by the checks listed on pages 1 to 17 inclusive of the check register are accurate and funds are available for payment thereof.

By: _____

Director of Administrative Services

This is to certify that the claims or demands covered by checks listed on pages 1 to 17 inclusive of the check register have been audited by the City Council of the City of Gardena and that all of the said checks are approved for payment except check numbers:

_____

_____ 12/12/2023

Mayor Date

_____ _____

Councilmember Date

_____ _____

Councilmember Date

Acknowledged:

_____ _____

Councilmember Date

_____ _____

Councilmember Date

CITY OF GARDENA

INVESTMENT REPORT

October 2023

Prepared by Danny Rodriguez, Deputy City Treasurer
Reviewed by Ray Beeman, Director of Administrative Services

City of Gardena Consolidated - Account #10647

MONTHLY ACCOUNT STATEMENT

OCTOBER 1, 2023 THROUGH OCTOBER 31, 2023

Chandler Team:
For questions about your account, please call (800) 317-4747,
or contact **operations@chandlerasset.com**

CHANDLER ASSET MANAGEMENT
chandlerasset.com

Information contained herein is confidential. We urge you to compare this statement to the one you receive from your qualified custodian. Please see Important Disclosures.

City of Gardena Consolidated

Account #10647

Portfolio Summary

As of October 31, 2023

PORTFOLIO CHARACTERISTICS

Average Modified Duration	0.63
Average Coupon	4.23%
Average Purchase YTM	4.21%
Average Market YTM	5.27%
Average S&P/Moody Rating	AAA/Aa1
Average Final Maturity	0.77 yrs
Average Life	0.68 yrs

ACCOUNT SUMMARY

	Beg. Values as of 9/30/23	End Values as of 10/31/23
Market Value	85,097,504	85,390,016
Accrued Interest	165,642	175,103
Total Market Value	**85,263,147**	**85,565,118**
Income Earned	289,228	310,072
Cont/WD		
Par	80,429,010	80,770,090
Book Value	86,420,993	86,719,707
Cost Value	86,585,891	86,883,302

TOP ISSUERS

CAMP	49.5%
Government of United States	16.0%
CalTrust	7.7%
Local Agency Investment Fund	6.3%
Federal Home Loan Mortgage Corp	2.7%
Federal Home Loan Bank	1.9%
Federal Farm Credit Bank	1.3%
John Deere ABS	1.0%
Total	**86.5%**

SECTOR ALLOCATION

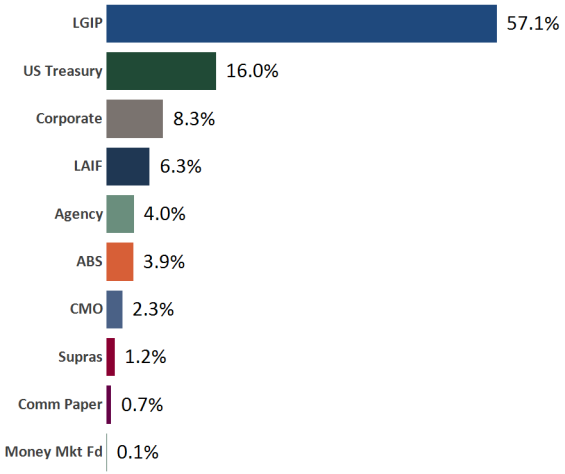

MATURITY DISTRIBUTION

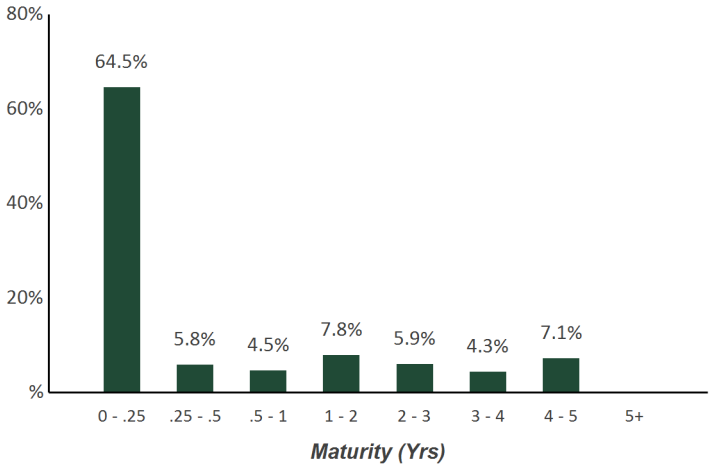

CREDIT QUALITY (S&P)

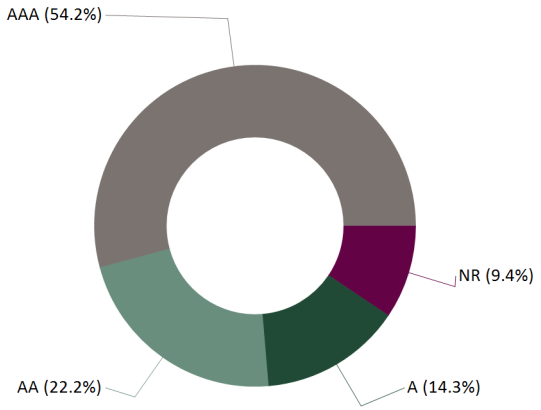

Holdings Report

As of October 31, 2023

CUSIP	Security Description	Par Value/Units	Purchase Date Book Yield	Cost Value Book Value	Mkt Price Mkt YTM	Market Value Accrued Int.	% of Port. Gain/Loss	Moody/S&P Fitch	Maturity Duration
ABS									
43813KAC6	Honda Auto Receivables Trust 2020-3 A3 0.37% Due 10/18/2024	7,194.07	09/22/2020 0.38%	7,193.01 7,194.05	99.37 5.96%	7,148.50 0.96	0.01% (45.55)	NR / AAA AAA	0.97 0.11
58769KAD6	Mercedes-Benz Auto Lease Trust 2021-B A3 0.4% Due 11/15/2024	24,041.24	06/22/2021 0.40%	24,039.43 24,041.09	99.38 5.49%	23,891.51 4.27	0.03% (149.58)	NR / AAA AAA	1.04 0.12
09690AAC7	BMW Vehicle Lease Trust 2021-2 A3 0.33% Due 12/26/2024	5,413.38	09/08/2021 0.34%	5,412.83 5,413.34	99.65 5.41%	5,394.34 0.30	0.01% (19.00)	Aaa / NR AAA	1.16 0.07
89236XAC0	Toyota Auto Receivables 2020-D A3 0.35% Due 1/15/2025	3,606.26	10/06/2020 0.36%	3,605.59 3,606.07	99.66 6.02%	3,593.88 0.56	0.00% (12.19)	NR / AAA AAA	1.21 0.06
05601XAC3	BMW Vehicle Lease Trust 2022-1 A3 1.1% Due 3/25/2025	38,337.40	01/11/2022 1.11%	38,331.67 38,336.36	99.05 6.00%	37,971.39 7.03	0.04% (364.97)	NR / AAA AAA	1.40 0.19
43813GAC5	Honda Auto Receivables Trust 2021-1 A3 0.27% Due 4/21/2025	19,161.74	02/17/2021 0.27%	19,161.40 19,161.70	98.39 5.98%	18,853.26 1.44	0.02% (308.44)	Aaa / NR AAA	1.47 0.28
47788UAC6	John Deere Owner Trust 2021-A A3 0.36% Due 9/15/2025	23,274.22	03/02/2021 0.37%	23,269.76 23,273.04	97.85 5.84%	22,773.17 3.72	0.03% (499.87)	Aaa / NR AAA	1.88 0.39
05593AAC3	BMW Vehicle Lease Trust 2023-1 A3 5.16% Due 11/25/2025	40,000.00	02/07/2023 5.22%	39,999.05 39,999.37	99.07 6.19%	39,628.44 34.40	0.05% (370.93)	Aaa / AAA AAA	2.07 0.95
43815GAC3	Honda Auto Receivables Trust 2021-4 A3 0.88% Due 1/21/2026	68,190.98	11/16/2021 0.89%	68,176.60 68,185.18	96.59 5.91%	65,866.55 16.67	0.08% (2,318.63)	Aaa / NR AAA	2.23 0.68
47789QAC4	John Deere Owner Trust 2021-B A3 0.52% Due 3/16/2026	48,954.19	07/13/2021 0.52%	48,949.82 48,952.55	96.54 6.26%	47,259.69 11.31	0.06% (1,692.86)	Aaa / NR AAA	2.38 0.60
89238JAC9	Toyota Auto Receivables Trust 2021-D A3 0.71% Due 4/15/2026	52,741.54	11/09/2021 0.71%	52,740.42 52,741.10	96.35 6.22%	50,818.37 16.64	0.06% (1,922.73)	NR / AAA AAA	2.46 0.66
43815BAC4	Honda Auto Receivables Trust 2022-1 A3 1.88% Due 5/15/2026	165,000.00	02/15/2022 1.89%	164,975.18 164,988.17	96.50 5.99%	159,228.47 137.87	0.19% (5,759.70)	Aaa / AAA NR	2.54 0.85
43815PAC3	Honda Auto Receivables 2022-2 A3 3.73% Due 7/20/2026	105,000.00	08/15/2022 3.76%	104,993.74 104,996.16	97.36 6.02%	102,229.79 141.43	0.12% (2,766.37)	NR / AAA AAA	2.72 1.17
05602RAD3	BMW Vehicle Owner Trust 2022-A A3 3.21% Due 8/25/2026	300,000.00	01/05/2023 5.44%	292,136.72 294,728.63	97.63 6.09%	292,876.20 160.50	0.34% (1,852.43)	Aaa / AAA NR	2.82 0.83

Holdings Report

As of October 31, 2023

CUSIP	Security Description	Par Value/Units	Purchase Date Book Yield	Cost Value Book Value	Mkt Price Mkt YTM	Market Value Accrued Int.	% of Port. Gain/Loss	Moody/S&P Fitch	Maturity Duration
ABS									
89238FAD5	Toyota Auto Receivables OT 2022-B A3 2.93% Due 9/15/2026	115,000.00	04/07/2022 2.95%	114,997.31 114,998.59	97.25 5.87%	111,835.20 149.76	0.13% (3,163.39)	Aaa / AAA NR	2.88 0.94
47787JAC2	John Deere Owner Trust 2022-A A3 2.32% Due 9/16/2026	127,895.34	03/10/2022 2.34%	127,867.05 127,880.21	97.04 6.14%	124,106.18 131.87	0.15% (3,774.03)	Aaa / NR AAA	2.88 0.78
379929AD4	GM Financial Auto Leasing 2023-3 A3 5.38% Due 11/20/2026	75,000.00	08/08/2023 5.45%	74,991.01 74,991.82	99.10 5.98%	74,323.05 123.29	0.09% (668.77)	NR / AAA AAA	3.06 1.68
47800AAC4	John Deere Owner Trust 2022-B A3 3.74% Due 2/16/2027	135,000.00	07/12/2022 3.77%	134,987.11 134,991.74	97.14 6.13%	131,132.66 224.40	0.15% (3,859.08)	Aaa / NR AAA	3.30 1.22
448979AD6	Hyundai Auto Receivables Trust 2023-A A3 4.58% Due 4/15/2027	155,000.00	04/04/2023 4.63%	154,984.87 154,987.91	98.07 5.81%	152,014.86 315.51	0.18% (2,973.05)	NR / AAA AAA	3.46 1.63
36265WAD5	GM Financial Securitized Auto 2022-3 A3 3.64% Due 4/16/2027	90,000.00	07/06/2022 3.67%	89,999.38 89,999.63	97.37 5.86%	87,631.20 136.50	0.10% (2,368.43)	Aaa / NR AAA	3.46 1.21
43815JAC7	Honda Auto Receivables Owner 2023-1 A3 5.04% Due 4/21/2027	70,000.00	02/16/2023 5.10%	69,986.99 69,989.81	98.55 5.97%	68,986.05 98.00	0.08% (1,003.76)	Aaa / NR AAA	3.47 1.67
02582JJT8	American Express Credit Trust 2022-2 A 3.39% Due 5/17/2027	185,000.00	05/17/2022 3.42%	184,959.08 184,978.88	96.53 5.82%	178,585.13 278.73	0.21% (6,393.75)	NR / AAA AAA	3.55 1.45
47800BAC2	John Deere Owner Trust 2022-C A3 5.09% Due 6/15/2027	220,000.00	10/12/2022 5.15%	219,982.93 219,987.76	98.88 5.92%	217,540.62 497.69	0.25% (2,447.14)	Aaa / NR AAA	3.62 1.44
58770AAC7	Mercedes-Benz Auto Receivable 2023-1 A3 4.51% Due 11/15/2027	105,000.00	01/18/2023 4.56%	104,987.40 104,990.18	98.01 5.91%	102,907.46 210.47	0.12% (2,082.72)	NR / AAA AAA	4.04 1.47
362583AD8	GM Auto Receivable Trust 2023-2 A3 4.47% Due 2/16/2028	115,000.00	04/04/2023 4.51%	114,996.84 114,997.36	97.54 6.19%	112,175.37 214.19	0.13% (2,821.99)	Aaa / AAA NR	4.30 1.47
02582JJZ4	American Express Credit Trust 2023-1 A 4.87% Due 5/15/2028	125,000.00	06/07/2023 4.92%	124,988.91 124,990.37	98.29 5.66%	122,859.88 270.56	0.14% (2,130.49)	NR / AAA AAA	4.54 2.32
47787CAC7	John Deere Owner Trust 2023-C A3 5.48% Due 5/15/2028	310,000.00	09/12/2023 5.55%	309,978.70 309,979.40	99.57 5.74%	308,669.17 755.02	0.36% (1,310.23)	Aaa / NR AAA	4.54 2.16
161571HT4	Chase Issuance Trust 23-A1 A 5.16% Due 9/15/2028	340,000.00	09/07/2023 5.23%	339,905.75 339,909.79	98.99 5.61%	336,550.70 779.73	0.39% (3,359.09)	NR / AAA AAA	4.88 2.59
02582JKD1	American Express Credit Trust 2023-3 A 5.23% Due 9/15/2028	340,000.00	09/12/2023 5.29%	339,984.80 339,985.40	99.26 5.58%	337,469.72 790.31	0.40% (2,515.68)	NR / AAA AAA	4.88 2.59

Holdings Report

As of October 31, 2023

CUSIP	Security Description	Par Value/Units	Purchase Date Book Yield	Cost Value Book Value	Mkt Price Mkt YTM	Market Value Accrued Int.	% of Port. Gain/Loss	Moody/S&P Fitch	Maturity Duration
				3,400,583.35		**3,344,320.81**	**3.91%**	**Aaa / AAA**	**3.62**
Total ABS		**3,408,810.36**	**4.22%**	**3,403,275.66**	**5.87%**	**5,513.13**	**(58,954.85)**	**AAA**	**1.56**
AGENCY									
3137EAEZ8	FHLMC Note 0.25% Due 11/6/2023	335,000.00	11/03/2020 0.28%	334,698.50 334,998.62	99.93 5.35%	334,762.49 407.12	0.39% (236.13)	Aaa / AA+ AA+	0.02 0.01
3130A0F70	FHLB Note 3.375% Due 12/8/2023	350,000.00	10/30/2019 1.72%	372,781.50 350,562.32	99.77 5.51%	349,211.45 4,692.19	0.41% (1,350.87)	Aaa / AA+ NR	0.10 0.10
3130AT3H8	FHLB Note 3.375% Due 3/8/2024	460,000.00	08/25/2022 3.46%	459,448.00 459,873.83	99.21 5.62%	456,385.78 2,285.63	0.54% (3,488.05)	Aaa / AA+ NR	0.35 0.35
3130A1XJ2	FHLB Note 2.875% Due 6/14/2024	155,000.00	03/24/2020 0.99%	167,010.95 156,760.36	98.39 5.55%	152,506.05 1,695.85	0.18% (4,254.31)	Aaa / AA+ NR	0.62 0.60
3133ENKS8	FFCB Note 1.125% Due 1/6/2025	750,000.00	Various 1.60%	740,054.10 745,925.90	95.15 5.42%	713,620.50 2,695.31	0.84% (32,305.40)	NR / AA+ AA+	1.19 1.14
3133ENPG9	FFCB Note 1.75% Due 2/14/2025	415,000.00	02/10/2022 1.84%	413,891.95 414,523.39	95.62 5.32%	396,802.67 1,553.37	0.47% (17,720.72)	Aaa / AA+ AA+	1.29 1.24
3135G06G3	FNMA Note 0.5% Due 11/7/2025	350,000.00	11/18/2020 0.52%	349,639.50 349,853.53	91.22 5.14%	319,268.60 845.83	0.37% (30,584.93)	Aaa / AA+ AA+	2.02 1.95
3130ATS57	FHLB Note 4.5% Due 3/10/2028	700,000.00	03/21/2023 3.99%	715,799.00 713,849.15	98.45 4.90%	689,154.20 4,462.50	0.81% (24,694.95)	Aaa / AA+ NR	4.36 3.88
				3,553,323.50		**3,411,711.74**	**4.01%**	**Aaa / AA+**	**1.56**
Total Agency		**3,515,000.00**	**2.11%**	**3,526,347.10**	**5.31%**	**18,637.80**	**(114,635.36)**	**AA+**	**1.43**
CMO									
3137BNGT5	FHLMC K054 A2 2.745% Due 1/25/2026	500,000.00	02/15/2023 4.92%	474,785.16 480,889.81	94.60 5.44%	472,978.00 1,143.75	0.55% (7,911.81)	NR / AAA NR	2.24 1.99
3137FEBQ2	FHLMC K072 A2 3.444% Due 12/25/2027	500,000.00	08/22/2023 4.95%	470,429.69 471,699.92	92.90 5.39%	464,502.50 1,435.00	0.54% (7,197.42)	NR / NR AAA	4.15 3.70
3137FETN0	FHLMC K073 A2 3.35% Due 1/25/2028	465,000.00	05/24/2023 4.34%	446,908.59 448,557.13	92.44 5.39%	429,825.54 259.63	0.50% (18,731.59)	NR / NR AAA	4.24 3.76
3137FJEH8	FHLMC K081 A2 3.9% Due 8/25/2028	155,000.00	09/15/2023 4.89%	148,436.72 148,589.78	93.72 5.39%	145,273.13 503.75	0.17% (3,316.65)	NR / NR AAA	4.82 4.24
3137H4BY5	FHLMC K746 A2 2.031% Due 9/25/2028	315,000.00	10/03/2023 5.33%	270,973.83 271,604.16	85.19 5.55%	268,361.42 533.14	0.31% (3,242.74)	NR / NR AAA	4.91 4.48

Holdings Report

As of October 31, 2023

CUSIP	Security Description	Par Value/Units	Purchase Date Book Yield	Cost Value Book Value	Mkt Price Mkt YTM	Market Value Accrued Int.	% of Port. Gain/Loss	Moody/S&P Fitch	Maturity Duration
CMO									
3137FJZ93	FHLMC K084 A2 3.78% Due 10/25/2028	240,000.00	10/20/2023 5.40%	223,818.75 223,880.75	93.42 5.30%	224,201.76 756.00	0.26% 321.01	Aaa / NR NR	4.99 4.37
Total CMO		**2,175,000.00**	**4.91%**	**2,035,352.74** **2,045,221.55**	**5.41%**	**2,005,142.35** **4,631.27**	**2.35%** **(40,079.20)**	**Aaa / AAA** **AAA**	**3.96** **3.53**
COMMERCIAL PAPER									
62479LDC6	MUFG Bank Ltd Discount CP 5.66% Due 4/12/2024	600,000.00	07/25/2023 5.93%	575,284.67 584,623.67	97.44 5.93%	584,623.67 0.00	0.68% 0.00	P-1 / A-1 NR	0.45 0.44
Total Commercial Paper		**600,000.00**	**5.93%**	**575,284.67** **584,623.67**	**5.93%**	**584,623.67** **0.00**	**0.68%** **0.00**	**Aaa / AA** **NR**	**0.45** **0.44**
CORPORATE									
594918BX1	Microsoft Callable Note Cont 12/6/2023 2.875% Due 2/6/2024	200,000.00	03/05/2020 1.06%	213,320.00 200,341.04	99.29 5.56%	198,585.80 1,357.64	0.23% (1,755.24)	Aaa / AAA NR	0.27 0.26
89114QCB2	Toronto Dominion Bank Note 3.25% Due 3/11/2024	500,000.00	Various 1.53%	523,124.00 503,011.67	99.05 5.92%	495,239.00 2,256.95	0.58% (7,772.67)	A1 / A AA-	0.36 0.35
808513BN4	Charles Schwab Corp Callable Note Cont 2/18/2024 0.75% Due 3/18/2024	245,000.00	Various 0.58%	246,097.00 245,119.15	97.99 6.14%	240,084.57 219.48	0.28% (5,034.58)	A2 / A- A	0.38 0.37
023135BW5	Amazon.com Inc Note 0.45% Due 5/12/2024	130,000.00	05/10/2021 0.50%	129,810.20 129,966.58	97.36 5.58%	126,561.50 274.63	0.15% (3,405.08)	A1 / AA AA-	0.53 0.52
91324PEB4	United Health Group Inc Callable Note Cont 5/15/2022 0.55% Due 5/15/2024	500,000.00	11/24/2021 1.07%	493,760.00 498,638.04	97.36 5.59%	486,808.00 1,268.06	0.57% (11,830.04)	A2 / A+ A	0.54 0.52
14913R2L0	Caterpillar Financial Service Note 0.45% Due 5/17/2024	500,000.00	Various 0.66%	497,344.65 499,444.61	97.20 5.74%	486,021.51 1,025.00	0.57% (13,423.10)	A2 / A A+	0.55 0.53
89236TJH9	Toyota Motor Credit Corp Note 0.5% Due 6/18/2024	300,000.00	12/06/2021 1.07%	295,710.00 298,930.99	96.79 5.76%	290,355.90 554.17	0.34% (8,575.09)	A1 / A+ A+	0.63 0.61

Holdings Report

As of October 31, 2023

CUSIP	Security Description	Par Value/Units	Purchase Date Book Yield	Cost Value Book Value	Mkt Price Mkt YTM	Market Value Accrued Int.	% of Port. Gain/Loss	Moody/S&P Fitch	Maturity Duration
CORPORATE									
79466LAG9	Salesforce.com Inc Callable Note Cont 7/15/2022 0.625% Due 7/15/2024	35,000.00	06/29/2021 0.64%	34,982.15 34,995.83	96.51 5.74%	33,778.78 64.41	0.04% (1,217.05)	A2 / A+ NR	0.71 0.68
69371RR40	Paccar Financial Corp Note 0.5% Due 8/9/2024	80,000.00	08/03/2021 0.52%	79,956.80 79,988.88	96.12 5.71%	76,894.96 91.11	0.09% (3,093.92)	A1 / A+ NR	0.78 0.75
78015K7C2	Royal Bank of Canada Note 2.25% Due 11/1/2024	500,000.00	Various 0.88%	524,067.75 506,755.19	96.45 5.96%	482,229.50 5,625.00	0.57% (24,525.69)	A1 / A AA-	1.01 0.95
69371RR57	Paccar Financial Corp Note 0.9% Due 11/8/2024	175,000.00	11/02/2021 0.90%	174,989.50 174,996.43	95.20 5.82%	166,602.80 756.88	0.20% (8,393.63)	A1 / A+ NR	1.02 0.98
46647PAH9	JP Morgan Chase & Co Callable Note 2X 3/1/2024 3.22% Due 3/1/2025	500,000.00	Various 1.01%	531,052.10 503,594.33	98.92 6.47%	494,608.00 2,683.33	0.58% (8,986.33)	A1 / A- AA-	1.33 0.33
24422EWB1	John Deere Capital Corp Note 2.125% Due 3/7/2025	130,000.00	03/02/2022 2.14%	129,944.10 129,974.91	95.53 5.60%	124,192.51 414.38	0.15% (5,782.40)	A2 / A A+	1.35 1.30
63743HFE7	National Rural Utilities Note 3.45% Due 6/15/2025	95,000.00	04/27/2022 3.46%	94,974.35 94,986.66	96.42 5.79%	91,594.35 1,238.17	0.11% (3,392.31)	A2 / A- A	1.62 1.53
931142EW9	Wal-Mart Stores Note 3.9% Due 9/9/2025	80,000.00	09/06/2022 3.92%	79,944.00 79,965.36	97.69 5.22%	78,150.72 450.67	0.09% (1,814.64)	Aa2 / AA AA	1.86 1.75
437076CR1	Home Depot Callable Note Cont 8/15/2025 4% Due 9/15/2025	110,000.00	09/12/2022 4.01%	109,960.40 109,975.20	97.54 5.39%	107,297.74 562.22	0.13% (2,677.46)	A2 / A A	1.88 1.77
023135CN4	Amazon.com Inc Note 4.6% Due 12/1/2025	395,000.00	11/29/2022 4.60%	394,976.30 394,983.54	98.72 5.25%	389,946.77 7,570.83	0.46% (5,036.77)	A1 / AA AA-	2.09 1.92
857477BR3	State Street Bank Callable Note Cont 2/6/2025 1.746% Due 2/6/2026	90,000.00	02/02/2022 1.75%	90,000.00 90,000.00	94.51 6.32%	85,059.54 371.03	0.10% (4,940.46)	A1 / A AA-	2.27 1.21
037833BY5	Apple Inc Callable Note Cont 11/23/2025 3.25% Due 2/23/2026	400,000.00	05/09/2023 4.05%	391,672.00 393,094.05	95.71 5.24%	382,828.40 2,455.56	0.45% (10,265.65)	Aaa / AA+ NR	2.32 2.17
61747YET8	Morgan Stanley Callable Note Cont 7/17/2025 4.679% Due 7/17/2026	175,000.00	07/18/2022 4.68%	175,000.00 175,000.00	97.17 6.44%	170,040.33 2,365.49	0.20% (4,959.67)	A1 / A- A+	2.71 1.59
06428CAA2	Bank Of America NA Callable Note cont 7/17/2026 5.526% Due 8/18/2026	300,000.00	09/19/2023 5.61%	299,277.00 299,304.91	99.23 5.83%	297,681.00 3,361.65	0.35% (1,623.91)	Aa1 / A+ AA	2.80 2.53

Holdings Report

As of October 31, 2023

CUSIP	Security Description	Par Value/Units	Purchase Date Book Yield	Cost Value Book Value	Mkt Price Mkt YTM	Market Value Accrued Int.	% of Port. Gain/Loss	Moody/S&P Fitch	Maturity Duration
CORPORATE									
931142ER0	Wal-Mart Stores Callable Note Cont 08/17/2026 1.05% Due 9/17/2026	40,000.00	09/08/2021 1.09%	39,924.40 39,956.49	89.13 5.16%	35,652.76 51.33	0.04% (4,303.73)	Aa2 / AA AA	2.88 2.76
665859AW4	Northern Trust Company Callable Note Cont 4/10/2027 4% Due 5/10/2027	450,000.00	10/05/2022 4.71%	436,909.50 439,955.62	93.99 5.91%	422,973.00 8,550.00	0.50% (16,982.62)	A2 / A+ A+	3.53 3.16
931142EX7	Wal-Mart Stores Callable Note Cont 09/09/2027 3.95% Due 9/9/2027	225,000.00	09/27/2022 4.70%	217,588.50 219,221.82	95.72 5.19%	215,376.75 1,283.75	0.25% (3,845.07)	Aa2 / AA AA	3.86 3.50
438516CJ3	Honeywell Intl Callable Note Cont 01/15/2028 4.95% Due 2/15/2028	400,000.00	02/13/2023 4.44%	408,972.00 407,677.43	98.79 5.27%	395,169.20 4,180.00	0.47% (12,508.23)	A2 / A A	4.30 3.78
57636QAW4	MasterCard Inc Callable Note Cont 2/9/28 4.875% Due 3/9/2028	290,000.00	04/19/2023 4.17%	298,833.40 297,856.94	98.38 5.30%	285,289.24 2,042.08	0.34% (12,567.70)	Aa3 / A+ NR	4.36 3.84
74456QBU9	Public Service El & Gas Callable Note Cont 02/01/28 3.7% Due 5/1/2028	300,000.00	09/06/2023 5.10%	282,801.00 283,348.29	92.46 5.62%	277,389.90 5,550.00	0.33% (5,958.39)	A1 / A NR	4.50 3.98
58933YBH7	Merck & Co Callable Note Cont 4/17/2028 4.05% Due 5/17/2028	90,000.00	05/08/2023 4.07%	89,927.10 89,933.80	95.19 5.25%	85,669.11 1,660.50	0.10% (4,264.69)	A1 / A+ NR	4.55 4.00
Total Corporate		**7,235,000.00**	**2.63%**	**7,284,918.20** **7,221,017.76**	**5.71%**	**7,022,081.64** **58,284.32**	**8.27%** **(198,936.12)**	**A1 / A+** **A+**	**1.91** **1.64**
LAIF									
90LAIF$00	Local Agency Investment Fund State Pool	5,394,464.08	Various 3.65%	5,394,464.08 5,394,464.08	1.00 3.65%	5,394,464.08 16,701.26	6.32% 0.00	NR / NR NR	0.00 0.00
Total LAIF		**5,394,464.08**	**3.65%**	**5,394,464.08** **5,394,464.08**	**3.65%**	**5,394,464.08** **16,701.26**	**6.32%** **0.00**	**NR / NR** **NR**	**0.00** **0.00**
LOCAL GOV INVESTMENT POOL									
09CATR$05	CalTrust Medium Term Fund	681,005.97	Various 3.96%	6,841,633.43 6,841,633.43	9.63 3.96%	6,558,087.54 0.00	7.66% (283,545.89)	NR / A+ NR	0.00 0.00

Holdings Report

As of October 31, 2023

CUSIP	Security Description	Par Value/Units	Purchase Date Book Yield	Cost Value Book Value	Mkt Price Mkt YTM	Market Value Accrued Int.	% of Port. Gain/Loss	Moody/S&P Fitch	Maturity Duration
LOCAL GOV INVESTMENT POOL									
90CAMP$00	California Asset Mgmt Program CAMP	42,336,065.14	Various 5.56%	42,336,065.14 42,336,065.14	1.00 5.56%	42,336,065.14 0.00	49.48% 0.00	NR / AAA NR	0.00 0.00
Total Local Gov Investment Pool		**43,017,071.11**	**5.34%**	**49,177,698.57** **49,177,698.57**	**5.34%**	**48,894,152.68** **0.00**	**57.14%** **(283,545.89)**	**NR / AAA** **NR**	**0.00** **0.00**
MONEY MARKET FUND									
31846V203	First American Govt Obligation Fund Class Y	54,744.55	Various 4.97%	54,744.55 54,744.55	1.00 4.97%	54,744.55 0.00	0.06% 0.00	Aaa / AAA AAA	0.00 0.00
Total Money Market Fund		**54,744.55**	**4.97%**	**54,744.55** **54,744.55**	**4.97%**	**54,744.55** **0.00**	**0.06%** **0.00**	**Aaa / AAA** **AAA**	**0.00** **0.00**
SUPRANATIONAL									
459058JM6	Intl. Bank Recon & Development Note 0.25% Due 11/24/2023	165,000.00	11/17/2020 0.32%	164,645.25 164,992.55	99.68 5.28%	164,470.52 179.90	0.19% (522.03)	Aaa / AAA AAA	0.07 0.06
459058GQ0	Intl. Bank Recon & Development Note 2.5% Due 3/19/2024	225,000.00	01/26/2021 0.26%	240,736.50 226,908.70	98.84 5.59%	222,379.88 656.25	0.26% (4,528.82)	Aaa / AAA AAA	0.38 0.38
4581X0DZ8	Inter-American Dev Bank Note 0.5% Due 9/23/2024	260,000.00	09/15/2021 0.52%	259,807.60 259,942.60	95.58 5.63%	248,512.42 137.22	0.29% (11,430.18)	Aaa / AAA NR	0.90 0.87
45950KCR9	International Finance Corp Note 1.375% Due 10/16/2024	160,000.00	07/12/2021 0.54%	164,304.00 161,265.88	96.08 5.63%	153,728.48 91.67	0.18% (7,537.40)	Aaa / AAA NR	0.96 0.93
459058KW2	Intl. Bank Recon & Development Note 4.625% Due 8/1/2028	250,000.00	Various 4.97%	246,407.00 246,435.26	98.47 4.99%	246,165.25 1,124.14	0.29% (270.01)	Aaa / AAA NR	4.76 4.19
Total Supranational		**1,060,000.00**	**1.47%**	**1,075,900.35** **1,059,544.99**	**5.42%**	**1,035,256.55** **2,189.18**	**1.21%** **(24,288.44)**	**Aaa / AAA** **AAA**	**1.58** **1.44**
US TREASURY									
912828V80	US Treasury Note 2.25% Due 1/31/2024	750,000.00	Various 0.84%	776,144.53 752,612.24	99.21 5.40%	744,111.00 4,264.61	0.87% (8,501.24)	Aaa / AA+ AA+	0.25 0.25

Holdings Report

As of October 31, 2023

CUSIP	Security Description	Par Value/Units	Purchase Date Book Yield	Cost Value Book Value	Mkt Price Mkt YTM	Market Value Accrued Int.	% of Port. Gain/Loss	Moody/S&P Fitch	Maturity Duration
US TREASURY									
912828B66	US Treasury Note 2.75% Due 2/15/2024	750,000.00	02/15/2022 1.58%	767,255.86 752,509.08	99.22 5.45%	744,141.00 4,371.60	0.87% (8,368.08)	Aaa / AA+ AA+	0.29 0.29
912828W71	US Treasury Note 2.125% Due 3/31/2024	750,000.00	Various 0.67%	775,839.84 754,478.11	98.64 5.47%	739,775.25 1,393.45	0.87% (14,702.86)	Aaa / AA+ AA+	0.42 0.41
91282CBV2	US Treasury Note 0.375% Due 4/15/2024	500,000.00	Various 0.37%	500,162.11 500,021.21	97.73 5.46%	488,672.00 87.09	0.57% (11,349.21)	Aaa / AA+ AA+	0.46 0.45
912828WJ5	US Treasury Note 2.5% Due 5/15/2024	750,000.00	Various 1.11%	779,783.21 755,513.17	98.41 5.52%	738,076.50 8,661.68	0.87% (17,436.67)	Aaa / AA+ AA+	0.54 0.52
91282CCG4	US Treasury Note 0.25% Due 6/15/2024	400,000.00	06/17/2021 0.43%	397,890.63 399,561.91	96.81 5.53%	387,250.00 379.78	0.45% (12,311.91)	Aaa / AA+ AA+	0.62 0.61
912828Y87	US Treasury Note 1.75% Due 7/31/2024	300,000.00	01/31/2020 1.35%	305,203.13 300,864.55	97.26 5.52%	291,785.10 1,326.77	0.34% (9,079.45)	Aaa / AA+ AA+	0.75 0.73
91282CCT6	US Treasury Note 0.375% Due 8/15/2024	400,000.00	08/25/2021 0.45%	399,109.38 399,763.60	96.09 5.50%	384,343.60 317.93	0.45% (15,420.00)	Aaa / AA+ AA+	0.79 0.77
91282CDH1	US Treasury Note 0.75% Due 11/15/2024	750,000.00	11/18/2021 0.83%	748,125.00 749,347.53	95.31 5.45%	714,814.50 2,598.51	0.84% (34,533.03)	Aaa / AA+ AA+	1.04 1.01
912828Z52	US Treasury Note 1.375% Due 1/31/2025	750,000.00	02/17/2022 1.71%	742,822.27 746,957.12	95.26 5.34%	714,462.75 2,606.15	0.84% (32,494.37)	Aaa / AA+ AA+	1.25 1.21
912828ZF0	US Treasury Note 0.5% Due 3/31/2025	350,000.00	03/25/2021 0.58%	348,906.26 349,614.24	93.55 5.29%	327,427.80 153.01	0.38% (22,186.44)	Aaa / AA+ AA+	1.42 1.38
912828ZT0	US Treasury Note 0.25% Due 5/31/2025	365,000.00	02/25/2021 0.60%	359,653.32 363,016.06	92.54 5.22%	337,781.95 383.95	0.40% (25,234.11)	Aaa / AA+ AA+	1.58 1.54
91282CEY3	US Treasury Note 3% Due 7/15/2025	550,000.00	06/23/2023 4.71%	531,845.70 534,944.03	96.49 5.17%	530,707.10 4,887.23	0.63% (4,236.93)	Aaa / AA+ AA+	1.71 1.62
9128284Z0	US Treasury Note 2.75% Due 8/31/2025	750,000.00	Various 0.98%	800,092.78 773,779.78	95.84 5.15%	718,828.50 3,513.05	0.84% (54,951.28)	Aaa / AA+ AA+	1.84 1.75
91282CFP1	US Treasury Note 4.25% Due 10/15/2025	550,000.00	06/23/2023 4.59%	545,982.42 546,593.17	98.44 5.10%	541,406.25 1,085.72	0.63% (5,186.92)	Aaa / AA+ AA+	1.96 1.85
91282CAZ4	US Treasury Note 0.375% Due 11/30/2025	750,000.00	Various 0.88%	734,730.47 742,290.27	90.86 5.06%	681,416.25 1,183.40	0.80% (60,874.02)	Aaa / AA+ AA+	2.08 2.02
9128286L9	US Treasury Note 2.25% Due 3/31/2026	750,000.00	02/25/2022 1.91%	760,078.13 755,950.96	93.86 4.98%	703,974.75 1,475.41	0.82% (51,976.21)	Aaa / AA+ AA+	2.42 2.30

Holdings Report

As of October 31, 2023

CUSIP	Security Description	Par Value/Units	Purchase Date Book Yield	Cost Value Book Value	Mkt Price Mkt YTM	Market Value Accrued Int.	% of Port. Gain/Loss	Moody/S&P Fitch	Maturity Duration
US TREASURY									
912828R36	US Treasury Note 1.625% Due 5/15/2026	250,000.00	10/14/2021 0.99%	257,148.44 253,956.64	92.10 4.97%	230,254.00 1,876.70	0.27% (23,702.64)	Aaa / AA+ AA+	2.54 2.42
912828YG9	US Treasury Note 1.625% Due 9/30/2026	300,000.00	12/28/2021 1.24%	305,296.88 303,246.47	91.25 4.88%	273,750.00 426.23	0.32% (29,496.47)	Aaa / AA+ AA+	2.92 2.78
912828U24	US Treasury Note 2% Due 11/15/2026	625,000.00	03/29/2022 2.56%	609,912.11 615,096.06	91.89 4.90%	574,291.88 5,774.46	0.68% (40,804.18)	Aaa / AA+ AA+	3.04 2.86
91282CEF4	US Treasury Note 2.5% Due 3/31/2027	750,000.00	Various 2.90%	736,449.21 740,401.53	92.62 4.87%	694,658.25 1,639.35	0.81% (45,743.28)	Aaa / AA+ AA+	3.42 3.20
912828X88	US Treasury Note 2.375% Due 5/15/2027	350,000.00	06/09/2022 3.09%	338,666.02 341,871.02	91.89 4.90%	321,617.10 3,840.01	0.38% (20,253.92)	Aaa / AA+ AA+	3.54 3.29
91282CFM8	US Treasury Note 4.125% Due 9/30/2027	570,000.00	10/26/2022 4.19%	568,419.14 568,744.28	97.33 4.88%	554,792.40 2,055.74	0.65% (13,951.88)	Aaa / AA+ AA+	3.92 3.55
9128283F5	US Treasury Note 2.25% Due 11/15/2027	800,000.00	12/20/2022 3.84%	743,625.00 753,545.74	90.46 4.88%	723,656.00 8,315.22	0.86% (29,889.74)	Aaa / AA+ AA+	4.04 3.74
91282CGC9	US Treasury Note 3.875% Due 12/31/2027	500,000.00	05/25/2023 3.98%	497,890.63 498,090.27	96.30 4.86%	481,523.50 6,528.53	0.57% (16,566.77)	Aaa / AA+ AA+	4.17 3.74
Total US Treasury		**14,310,000.00**	**1.89%**	**14,331,032.47** **14,252,769.04**	**5.20%**	**13,643,517.43** **69,145.58**	**16.03%** **(609,251.61)**	**Aaa / AA+** **AA+**	**1.83** **1.72**
TOTAL PORTFOLIO		**80,770,090.10**	**4.21%**	**86,883,302.48** **86,719,706.97**	**5.27%**	**85,390,015.50** **175,102.54**	**100.00%** **(1,329,691.47)**	**Aa1 / AAA** **AA+**	**0.77** **0.63**
TOTAL MARKET VALUE PLUS ACCRUED						**85,565,118.04**			

Transaction Ledger

As of October 31, 2023

Transaction Type	Settlement Date	CUSIP	Quantity	Security Description	Price	Acq/Disp Yield	Amount	Interest Pur/Sold	Total Amount	Gain/Loss
ACQUISITIONS										
Purchase	10/02/2023	31846V203	1,439.92	First American Govt Obligation Fund Class Y	1.000	4.94%	1,439.92	0.00	1,439.92	0.00
Purchase	10/06/2023	3137H4BY5	315,000.00	FHLMC K746 A2 2.031% Due 9/25/2028	86.023	5.33%	270,973.83	88.86	271,062.69	0.00
Purchase	10/15/2023	31846V203	12,625.00	First American Govt Obligation Fund Class Y	1.000	4.94%	12,625.00	0.00	12,625.00	0.00
Purchase	10/15/2023	90LAIF$00	48,200.24	Local Agency Investment Fund State Pool	1.000	3.61%	48,200.24	0.00	48,200.24	0.00
Purchase	10/16/2023	31846V203	1,100.80	First American Govt Obligation Fund Class Y	1.000	4.94%	1,100.80	0.00	1,100.80	0.00
Purchase	10/16/2023	31846V203	1,226.91	First American Govt Obligation Fund Class Y	1.000	4.94%	1,226.91	0.00	1,226.91	0.00
Purchase	10/16/2023	31846V203	933.17	First American Govt Obligation Fund Class Y	1.000	4.94%	933.17	0.00	933.17	0.00
Purchase	10/16/2023	31846V203	420.75	First American Govt Obligation Fund Class Y	1.000	4.94%	420.75	0.00	420.75	0.00
Purchase	10/16/2023	31846V203	591.58	First American Govt Obligation Fund Class Y	1.000	4.94%	591.58	0.00	591.58	0.00
Purchase	10/16/2023	31846V203	258.50	First American Govt Obligation Fund Class Y	1.000	4.94%	258.50	0.00	258.50	0.00
Purchase	10/16/2023	31846V203	273.00	First American Govt Obligation Fund Class Y	1.000	4.94%	273.00	0.00	273.00	0.00
Purchase	10/16/2023	31846V203	428.38	First American Govt Obligation Fund Class Y	1.000	4.94%	428.38	0.00	428.38	0.00
Purchase	10/16/2023	31846V203	522.63	First American Govt Obligation Fund Class Y	1.000	4.94%	522.63	0.00	522.63	0.00
Purchase	10/16/2023	31846V203	507.29	First American Govt Obligation Fund Class Y	1.000	4.94%	507.29	0.00	507.29	0.00
Purchase	10/16/2023	31846V203	1,284.26	First American Govt Obligation Fund Class Y	1.000	4.94%	1,284.26	0.00	1,284.26	0.00
Purchase	10/16/2023	31846V203	1,462.00	First American Govt Obligation Fund Class Y	1.000	4.94%	1,462.00	0.00	1,462.00	0.00

Transaction Ledger

As of October 31, 2023

Transaction Type	Settlement Date	CUSIP	Quantity	Security Description	Price	Acq/Disp Yield	Amount	Interest Pur/Sold	Total Amount	Gain/Loss
ACQUISITIONS										
Purchase	10/16/2023	31846V203	280.79	First American Govt Obligation Fund Class Y	1.000	4.94%	280.79	0.00	280.79	0.00
Purchase	10/16/2023	31846V203	394.62	First American Govt Obligation Fund Class Y	1.000	4.94%	394.62	0.00	394.62	0.00
Purchase	10/16/2023	31846V203	2,355.99	First American Govt Obligation Fund Class Y	1.000	4.94%	2,355.99	0.00	2,355.99	0.00
Purchase	10/16/2023	31846V203	2,659.93	First American Govt Obligation Fund Class Y	1.000	4.94%	2,659.93	0.00	2,659.93	0.00
Purchase	10/16/2023	31846V203	2,750.13	First American Govt Obligation Fund Class Y	1.000	4.94%	2,750.13	0.00	2,750.13	0.00
Purchase	10/16/2023	31846V203	7,313.25	First American Govt Obligation Fund Class Y	1.000	4.94%	7,313.25	0.00	7,313.25	0.00
Purchase	10/16/2023	31846V203	2,356.72	First American Govt Obligation Fund Class Y	1.000	4.94%	2,356.72	0.00	2,356.72	0.00
Purchase	10/16/2023	31846V203	3,514.56	First American Govt Obligation Fund Class Y	1.000	4.94%	3,514.56	0.00	3,514.56	0.00
Purchase	10/18/2023	31846V203	326.37	First American Govt Obligation Fund Class Y	1.000	4.94%	326.37	0.00	326.37	0.00
Purchase	10/18/2023	31846V203	2,909.85	First American Govt Obligation Fund Class Y	1.000	4.94%	2,909.85	0.00	2,909.85	0.00
Purchase	10/20/2023	31846V203	336.25	First American Govt Obligation Fund Class Y	1.000	4.94%	336.25	0.00	336.25	0.00
Purchase	10/20/2023	31846V203	812.29	First American Govt Obligation Fund Class Y	1.000	4.94%	812.29	0.00	812.29	0.00
Purchase	10/20/2023	459058KW2	200,000.00	Intl. Bank Recon & Development Note 4.625% Due 8/1/2028	98.355	5.02%	196,710.00	616.67	197,326.67	0.00
Purchase	10/23/2023	31846V203	294.00	First American Govt Obligation Fund Class Y	1.000	4.94%	294.00	0.00	294.00	0.00
Purchase	10/23/2023	31846V203	3,108.88	First American Govt Obligation Fund Class Y	1.000	4.94%	3,108.88	0.00	3,108.88	0.00
Purchase	10/23/2023	31846V203	4,719.29	First American Govt Obligation Fund Class Y	1.000	4.94%	4,719.29	0.00	4,719.29	0.00

Transaction Ledger

As of October 31, 2023

Transaction Type	Settlement Date	CUSIP	Quantity	Security Description	Price	Acq/Disp Yield	Amount	Interest Pur/Sold	Total Amount	Gain/Loss
ACQUISITIONS										
Purchase	10/24/2023	31846V203	239,067.00	First American Govt Obligation Fund Class Y	1.000	4.94%	239,067.00	0.00	239,067.00	0.00
Purchase	10/25/2023	3137FJZ93	240,000.00	FHLMC K084 A2 3.78% Due 10/25/2028	93.258	5.40%	223,818.75	604.80	224,423.55	0.00
Purchase	10/25/2023	31846V203	503.75	First American Govt Obligation Fund Class Y	1.000	4.94%	503.75	0.00	503.75	0.00
Purchase	10/25/2023	31846V203	172.00	First American Govt Obligation Fund Class Y	1.000	4.94%	172.00	0.00	172.00	0.00
Purchase	10/25/2023	31846V203	802.50	First American Govt Obligation Fund Class Y	1.000	4.94%	802.50	0.00	802.50	0.00
Purchase	10/25/2023	31846V203	1,143.75	First American Govt Obligation Fund Class Y	1.000	4.94%	1,143.75	0.00	1,143.75	0.00
Purchase	10/25/2023	31846V203	1,435.00	First American Govt Obligation Fund Class Y	1.000	4.94%	1,435.00	0.00	1,435.00	0.00
Purchase	10/25/2023	31846V203	1,298.13	First American Govt Obligation Fund Class Y	1.000	4.94%	1,298.13	0.00	1,298.13	0.00
Purchase	10/25/2023	31846V203	7,537.31	First American Govt Obligation Fund Class Y	1.000	4.94%	7,537.31	0.00	7,537.31	0.00
Purchase	10/25/2023	31846V203	4,077.54	First American Govt Obligation Fund Class Y	1.000	4.94%	4,077.54	0.00	4,077.54	0.00
Purchase	10/31/2023	09CATR$05	2,263.73	CalTrust Medium Term Fund	9.630	3.96%	21,799.76	0.00	21,799.76	0.00
Purchase	10/31/2023	90CAMP$00	198,867.00	California Asset Mgmt Program CAMP	1.000	5.56%	198,867.00	0.00	198,867.00	0.00
Subtotal			**1,317,575.06**				**1,273,613.67**	**1,310.33**	**1,274,924.00**	**0.00**
Short Sale	10/25/2023	31846V203	-224,423.55	First American Govt Obligation Fund Class Y	1.000		-224,423.55	0.00	-224,423.55	0.00
Subtotal			**-224,423.55**				**-224,423.55**	**0.00**	**-224,423.55**	**0.00**
TOTAL ACQUISITIONS			**1,093,151.51**				**1,049,190.12**	**1,310.33**	**1,050,500.45**	**0.00**

Transaction Ledger

As of October 31, 2023

Transaction Type	Settlement Date	CUSIP	Quantity	Security Description	Price	Acq/Disp Yield	Amount	Interest Pur/Sold	Total Amount	Gain/Loss
DISPOSITIONS										
Closing Purchase	10/25/2023	31846V203	-224,423.55	First American Govt Obligation Fund Class Y	1.000		-224,423.55	0.00	-224,423.55	0.00
Subtotal			**-224,423.55**				**-224,423.55**	**0.00**	**-224,423.55**	**0.00**
Sale	10/06/2023	31846V203	271,062.69	First American Govt Obligation Fund Class Y	1.000	4.94%	271,062.69	0.00	271,062.69	0.00
Sale	10/20/2023	31846V203	197,326.67	First American Govt Obligation Fund Class Y	1.000	4.94%	197,326.67	0.00	197,326.67	0.00
Sale	10/24/2023	3130AT3H8	240,000.00	FHLB Note 3.375% Due 3/8/2024	99.180	3.46%	238,032.00	1,035.00	239,067.00	-1,898.06
Sale	10/25/2023	31846V203	224,423.55	First American Govt Obligation Fund Class Y	1.000	4.94%	224,423.55	0.00	224,423.55	0.00
Subtotal			**932,812.91**				**930,844.91**	**1,035.00**	**931,879.91**	**-1,898.06**
Paydown	10/16/2023	02582JJT8	0.00	American Express Credit Trust 2022-2 A 3.39% Due 5/17/2027	100.000		0.00	522.63	522.63	0.00
Paydown	10/16/2023	02582JJZ4	0.00	American Express Credit Trust 2023-1 A 4.87% Due 5/15/2028	100.000		0.00	507.29	507.29	0.00
Paydown	10/16/2023	02582JKD1	0.00	American Express Credit Trust 2023-3 A 5.23% Due 9/15/2028	100.000		0.00	1,284.26	1,284.26	0.00
Paydown	10/16/2023	161571HT4	0.00	Chase Issuance Trust 23-A1 A 5.16% Due 9/15/2028	100.000		0.00	1,462.00	1,462.00	0.00
Paydown	10/16/2023	362583AD8	0.00	GM Auto Receivable Trust 2023-2 A3 4.47% Due 2/16/2028	100.000		0.00	428.38	428.38	0.00
Paydown	10/16/2023	36265WAD5	0.00	GM Financial Securitized Auto 2022-3 A3 3.64% Due 4/16/2027	100.000		0.00	273.00	273.00	0.00
Paydown	10/16/2023	43815BAC4	0.00	Honda Auto Receivables Trust 2022-1 A3 1.88% Due 5/15/2026	100.000		0.00	258.50	258.50	0.00
Paydown	10/16/2023	448979AD6	0.00	Hyundai Auto Receivables Trust 2023-A A3 4.58% Due 4/15/2027	100.000		0.00	591.58	591.58	0.00

Transaction Ledger

As of October 31, 2023

Transaction Type	Settlement Date	CUSIP	Quantity	Security Description	Price	Acq/Disp Yield	Amount	Interest Pur/Sold	Total Amount	Gain/Loss
DISPOSITIONS										
Paydown	10/16/2023	47787CAC7	0.00	John Deere Owner Trust 2023-C A3 5.48% Due 5/15/2028	100.000		0.00	1,226.91	1,226.91	0.00
Paydown	10/16/2023	47787JAC2	2,104.66	John Deere Owner Trust 2022-A A3 2.32% Due 9/16/2026	100.000		2,104.66	251.33	2,355.99	0.00
Paydown	10/16/2023	47788UAC6	2,652.15	John Deere Owner Trust 2021-A A3 0.36% Due 9/15/2025	100.000		2,652.15	7.78	2,659.93	0.00
Paydown	10/16/2023	47789QAC4	2,727.73	John Deere Owner Trust 2021-B A3 0.52% Due 3/16/2026	100.000		2,727.73	22.40	2,750.13	0.00
Paydown	10/16/2023	47800AAC4	0.00	John Deere Owner Trust 2022-B A3 3.74% Due 2/16/2027	100.000		0.00	420.75	420.75	0.00
Paydown	10/16/2023	47800BAC2	0.00	John Deere Owner Trust 2022-C A3 5.09% Due 6/15/2027	100.000		0.00	933.17	933.17	0.00
Paydown	10/16/2023	58769KAD6	7,302.80	Mercedes-Benz Auto Lease Trust 2021-B A3 0.4% Due 11/15/2024	100.000		7,302.80	10.45	7,313.25	0.00
Paydown	10/16/2023	58770AAC7	0.00	Mercedes-Benz Auto Receivable 2023-1 A3 4.51% Due 11/15/2027	100.000		0.00	394.62	394.62	0.00
Paydown	10/16/2023	89236XAC0	2,354.98	Toyota Auto Receivables 2020-D A3 0.35% Due 1/15/2025	100.000		2,354.98	1.74	2,356.72	0.00
Paydown	10/16/2023	89238FAD5	0.00	Toyota Auto Receivables OT 2022-B A3 2.93% Due 9/15/2026	100.000		0.00	280.79	280.79	0.00
Paydown	10/16/2023	89238JAC9	3,481.29	Toyota Auto Receivables Trust 2021-D A3 0.71% Due 4/15/2026	100.000		3,481.29	33.27	3,514.56	0.00
Paydown	10/18/2023	43813KAC6	2,906.74	Honda Auto Receivables Trust 2020-3 A3 0.37% Due 10/18/2024	100.000		2,906.74	3.11	2,909.85	0.00
Paydown	10/18/2023	43815PAC3	0.00	Honda Auto Receivables 2022-2 A3 3.73% Due 7/20/2026	100.000		0.00	326.37	326.37	0.00
Paydown	10/20/2023	379929AD4	0.00	GM Financial Auto Leasing 2023-3 A3 5.38% Due 11/20/2026	100.000		0.00	336.25	336.25	0.00

Transaction Ledger

As of October 31, 2023

Transaction Type	Settlement Date	CUSIP	Quantity	Security Description	Price	Acq/Disp Yield	Amount	Interest Pur/Sold	Total Amount	Gain/Loss
DISPOSITIONS										
Paydown	10/20/2023	92290BAA9	811.97	Verizon Owner Trust 2020-B A 0.47% Due 2/20/2025	100.000		811.97	0.32	812.29	0.00
Paydown	10/23/2023	43813GAC5	3,103.87	Honda Auto Receivables Trust 2021-1 A3 0.27% Due 4/21/2025	100.000		3,103.87	5.01	3,108.88	0.00
Paydown	10/23/2023	43815GAC3	4,665.86	Honda Auto Receivables Trust 2021-4 A3 0.88% Due 1/21/2026	100.000		4,665.86	53.43	4,719.29	0.00
Paydown	10/23/2023	43815JAC7	0.00	Honda Auto Receivables Owner 2023-1 A3 5.04% Due 4/21/2027	100.000		0.00	294.00	294.00	0.00
Paydown	10/25/2023	05593AAC3	0.00	BMW Vehicle Lease Trust 2023-1 A3 5.16% Due 11/25/2025	100.000		0.00	172.00	172.00	0.00
Paydown	10/25/2023	05601XAC3	7,495.30	BMW Vehicle Lease Trust 2022-1 A3 1.1% Due 3/25/2025	100.000		7,495.30	42.01	7,537.31	0.00
Paydown	10/25/2023	05602RAD3	0.00	BMW Vehicle Owner Trust 2022-A A3 3.21% Due 8/25/2026	100.000		0.00	802.50	802.50	0.00
Paydown	10/25/2023	09690AAC7	4,074.93	BMW Vehicle Lease Trust 2021-2 A3 0.33% Due 12/26/2024	100.000		4,074.93	2.61	4,077.54	0.00
Paydown	10/25/2023	3137BNGT5	0.00	FHLMC K054 A2 2.745% Due 1/25/2026	100.000		0.00	1,143.75	1,143.75	0.00
Paydown	10/25/2023	3137FEBQ2	0.00	FHLMC K072 A2 3.444% Due 12/25/2027	100.000		0.00	1,435.00	1,435.00	0.00
Paydown	10/25/2023	3137FETN0	0.00	FHLMC K073 A2 3.35% Due 1/25/2028	100.000		0.00	1,298.13	1,298.13	0.00
Paydown	10/25/2023	3137FJEH8	0.00	FHLMC K081 A2 3.9% Due 8/25/2028	100.000		0.00	503.75	503.75	0.00
Subtotal			**43,682.28**				**43,682.28**	**15,329.09**	**59,011.37**	**0.00**
TOTAL DISPOSITIONS			**752,071.64**				**750,103.64**	**16,364.09**	**766,467.73**	**-1,898.06**
OTHER TRANSACTIONS										
Interest	10/15/2023	91282CBV2	500,000.00	US Treasury Note	0.000		937.50	0.00	937.50	0.00

				0.375% Due 4/15/2024					
Interest	10/15/2023	91282CFP1	550,000.00	US Treasury Note 4.25% Due 10/15/2025	0.000	11,687.50	0.00	11,687.50	0.00
Interest	10/16/2023	45950KCR9	160,000.00	International Finance Corp Note 1.375% Due 10/16/2024	0.000	1,100.80	0.00	1,100.80	0.00
Subtotal			**1,210,000.00**			**13,725.80**	**0.00**	**13,725.80**	**0.00**
Dividend	10/02/2023	31846V203	434,313.37	First American Govt Obligation Fund Class Y	0.000	1,439.92	0.00	1,439.92	0.00
Dividend	10/15/2023	90LAIF$00	480,468,489.92	Local Agency Investment Fund State Pool	0.000	48,200.24	0.00	48,200.24	0.00
Dividend	10/31/2023	09CATR$05	678,742.24	CalTrust Medium Term Fund	0.000	21,799.76	0.00	21,799.76	0.00
Dividend	10/31/2023	90CAMP$00	42,137,198.14	California Asset Mgmt Program CAMP	0.000	198,867.00	0.00	198,867.00	0.00
Subtotal			**523,718,743.67**			**270,306.92**	**0.00**	**270,306.92**	**0.00**
TOTAL OTHER TRANSACTIONS			**524,928,743.67**			**284,032.72**	**0.00**	**284,032.72**	**0.00**

Income Earned

As of October 31, 2023

CUSIP	Security Description	Trade Date Settle Date Units	Book Value: Begin Book Value: Acq Book Value: Disp Book Value: End	Prior Accrued Inc. Received Ending Accrued Total Interest	Accr. Of Discount Amort. Of Premium Net Accret/Amort Income Earned	Total Income
FIXED INCOME						
023135BW5	Amazon.com Inc Note 0.45% Due 05/12/2024	05/10/2021 05/12/2021 130,000.00	129,961.21 0.00 0.00 129,966.58	225.88 0.00 274.63 48.75	5.37 0.00 5.37 54.12	54.12
023135CN4	Amazon.com Inc Note 4.6% Due 12/01/2025	11/29/2022 12/01/2022 395,000.00	394,982.87 0.00 0.00 394,983.54	6,056.67 0.00 7,570.83 1,514.16	0.67 0.00 0.67 1,514.83	1,514.83
02582JJT8	American Express Credit Trust 2022-2 A 3.39% Due 05/17/2027	05/17/2022 05/24/2022 185,000.00	184,977.71 0.00 0.00 184,978.88	278.73 522.63 278.73 522.63	1.17 0.00 1.17 523.80	523.80
02582JJZ4	American Express Credit Trust 2023-1 A 4.87% Due 05/15/2028	06/07/2023 06/14/2023 125,000.00	124,990.04 0.00 0.00 124,990.37	270.56 507.29 270.56 507.29	0.33 0.00 0.33 507.62	507.62
02582JKD1	American Express Credit Trust 2023-3 A 5.23% Due 09/15/2028	09/12/2023 09/19/2023 340,000.00	339,984.97 0.00 0.00 339,985.40	592.73 1,284.26 790.31 1,481.84	0.43 0.00 0.43 1,482.27	1,482.27
037833BY5	Apple Inc Callable Note Cont 11/23/2025 3.25% Due 02/23/2026	05/09/2023 05/11/2023 400,000.00	392,840.70 0.00 0.00 393,094.05	1,372.22 0.00 2,455.56 1,083.34	253.35 0.00 253.35 1,336.69	1,336.69
05593AAC3	BMW Vehicle Lease Trust 2023-1 A3 5.16% Due 11/25/2025	02/07/2023 02/15/2023 40,000.00	39,999.33 0.00 0.00 39,999.37	34.40 172.00 34.40 172.00	0.04 0.00 0.04 172.04	172.04
05601XAC3	BMW Vehicle Lease Trust 2022-1 A3 1.1% Due 03/25/2025	01/11/2022 01/19/2022 38,337.40	45,831.19 0.00 7,495.30 38,336.36	8.40 42.01 7.03 40.64	0.47 0.00 0.47 41.11	41.11
05602RAD3	BMW Vehicle Owner Trust 2022-A A3 3.21% Due 08/25/2026	01/05/2023 01/09/2023 300,000.00	294,457.18 0.00 0.00 294,728.63	160.50 802.50 160.50 802.50	271.45 0.00 271.45 1,073.95	1,073.95

Income Earned

As of October 31, 2023

CUSIP	Security Description	Trade Date Settle Date Units	Book Value: Begin Book Value: Acq Book Value: Disp Book Value: End	Prior Accrued Inc. Received Ending Accrued Total Interest	Accr. Of Discount Amort. Of Premium Net Accret/Amort Income Earned	Total Income
06428CAA2	Bank Of America NA Callable Note cont 7/17/2026 5.526% Due 08/18/2026	09/19/2023 09/21/2023 300,000.00	299,283.81 0.00 0.00 299,304.91	1,980.15 0.00 3,361.65 1,381.50	21.10 0.00 21.10 1,402.60	1,402.60
09690AAC7	BMW Vehicle Lease Trust 2021-2 A3 0.33% Due 12/26/2024	09/08/2021 09/15/2021 5,413.38	9,488.21 0.00 4,074.93 5,413.34	0.52 2.61 0.30 2.39	0.06 0.00 0.06 2.45	2.45
14913R2L0	Caterpillar Financial Service Note 0.45% Due 05/17/2024	Various Various 500,000.00	499,357.65 0.00 0.00 499,444.61	837.51 0.00 1,025.00 187.49	86.96 0.00 86.96 274.45	274.45
161571HT4	Chase Issuance Trust 23-A1 A 5.16% Due 09/15/2028	09/07/2023 09/15/2023 340,000.00	339,907.13 0.00 0.00 339,909.79	779.73 1,462.00 779.73 1,462.00	2.66 0.00 2.66 1,464.66	1,464.66
24422EWB1	John Deere Capital Corp Note 2.125% Due 03/07/2025	03/02/2022 03/07/2022 130,000.00	129,973.33 0.00 0.00 129,974.91	184.17 0.00 414.38 230.21	1.58 0.00 1.58 231.79	231.79
3130A0F70	FHLB Note 3.375% Due 12/08/2023	10/30/2019 10/31/2019 350,000.00	351,033.45 0.00 0.00 350,562.32	3,707.81 0.00 4,692.19 984.38	0.00 471.13 (471.13) 513.25	513.25
3130A1XJ2	FHLB Note 2.875% Due 06/14/2024	03/24/2020 03/25/2020 155,000.00	157,001.83 0.00 0.00 156,760.36	1,324.50 0.00 1,695.85 371.35	0.00 241.47 (241.47) 129.88	129.88
3130AT3H8	FHLB Note 3.375% Due 03/08/2024	08/25/2022 08/26/2022 460,000.00	699,761.50 0.00 239,930.06 459,873.83	1,509.38 1,035.00 2,285.63 1,811.25	42.39 0.00 42.39 1,853.64	1,853.64
3130ATS57	FHLB Note 4.5% Due 03/10/2028	03/21/2023 03/22/2023 700,000.00	714,119.00 0.00 0.00 713,849.15	1,837.50 0.00 4,462.50 2,625.00	0.00 269.85 (269.85) 2,355.15	2,355.15

Income Earned

As of October 31, 2023

CUSIP	Security Description	Trade Date Settle Date Units	Book Value: Begin Book Value: Acq Book Value: Disp Book Value: End	Prior Accrued Inc. Received Ending Accrued Total Interest	Accr. Of Discount Amort. Of Premium Net Accret/Amort Income Earned	Total Income
3133ENKS8	FFCB Note 1.125% Due 01/06/2025	Various Various 750,000.00	745,633.54 0.00 0.00 745,925.90	1,992.19 0.00 2,695.31 703.12	292.36 0.00 292.36 995.48	995.48
3133ENPG9	FFCB Note 1.75% Due 02/14/2025	02/10/2022 02/15/2022 415,000.00	414,492.02 0.00 0.00 414,523.39	948.16 0.00 1,553.37 605.21	31.37 0.00 31.37 636.58	636.58
3135G06G3	FNMA Note 0.5% Due 11/07/2025	11/18/2020 11/19/2020 350,000.00	349,847.37 0.00 0.00 349,853.53	700.00 0.00 845.83 145.83	6.16 0.00 6.16 151.99	151.99
3137BNGT5	FHLMC K054 A2 2.745% Due 01/25/2026	02/15/2023 02/21/2023 500,000.00	480,141.81 0.00 0.00 480,889.81	1,143.75 1,143.75 1,143.75 1,143.75	748.00 0.00 748.00 1,891.75	1,891.75
3137EAEZ8	FHLMC Note 0.25% Due 11/06/2023	11/03/2020 11/05/2020 335,000.00	334,990.10 0.00 0.00 334,998.62	337.33 0.00 407.12 69.79	8.52 0.00 8.52 78.31	78.31
3137FEBQ2	FHLMC K072 A2 3.444% Due 12/25/2027	08/22/2023 08/25/2023 500,000.00	471,120.85 0.00 0.00 471,699.92	1,435.00 1,435.00 1,435.00 1,435.00	579.07 0.00 579.07 2,014.07	2,014.07
3137FETN0	FHLMC K073 A2 3.35% Due 01/25/2028	05/24/2023 05/30/2023 465,000.00	448,227.42 0.00 0.00 448,557.13	259.63 1,298.13 259.63 1,298.13	329.71 0.00 329.71 1,627.84	1,627.84
3137FJEH8	FHLMC K081 A2 3.9% Due 08/25/2028	09/15/2023 09/20/2023 155,000.00	148,476.81 0.00 0.00 148,589.78	503.75 503.75 503.75 503.75	112.97 0.00 112.97 616.72	616.72
3137FJZ93	FHLMC K084 A2 3.78% Due 10/25/2028	10/20/2023 10/25/2023 240,000.00	0.00 223,818.75 0.00 223,880.75	0.00 (604.80) 756.00 151.20	62.00 0.00 62.00 213.20	213.20

Income Earned

As of October 31, 2023

CUSIP	Security Description	Trade Date Settle Date Units	Book Value: Begin Book Value: Acq Book Value: Disp Book Value: End	Prior Accrued Inc. Received Ending Accrued Total Interest	Accr. Of Discount Amort. Of Premium Net Accret/Amort Income Earned	Total Income
3137H4BY5	FHLMC K746 A2 2.031% Due 09/25/2028	10/03/2023 10/06/2023 315,000.00	0.00 270,973.83 0.00 271,604.16	0.00 (88.86) 533.14 444.28	630.33 0.00 630.33 1,074.61	1,074.61
362583AD8	GM Auto Receivable Trust 2023-2 A3 4.47% Due 02/16/2028	04/04/2023 04/12/2023 115,000.00	114,997.28 0.00 0.00 114,997.36	214.19 428.38 214.19 428.38	0.08 0.00 0.08 428.46	428.46
36265WAD5	GM Financial Securitized Auto 2022-3 A3 3.64% Due 04/16/2027	07/06/2022 07/13/2022 90,000.00	89,999.62 0.00 0.00 89,999.63	136.50 273.00 136.50 273.00	0.01 0.00 0.01 273.01	273.01
379929AD4	GM Financial Auto Leasing 2023-3 A3 5.38% Due 11/20/2026	08/08/2023 08/16/2023 75,000.00	74,991.49 0.00 0.00 74,991.82	123.29 336.25 123.29 336.25	0.33 0.00 0.33 336.58	336.58
437076CR1	Home Depot Callable Note Cont 8/15/2025 4% Due 09/15/2025	09/12/2022 09/19/2022 110,000.00	109,974.07 0.00 0.00 109,975.20	195.56 0.00 562.22 366.66	1.13 0.00 1.13 367.79	367.79
43813GAC5	Honda Auto Receivables Trust 2021-1 A3 0.27% Due 04/21/2025	02/17/2021 02/24/2021 19,161.74	22,265.55 0.00 3,103.87 19,161.70	1.67 5.01 1.44 4.78	0.02 0.00 0.02 4.80	4.80
43813KAC6	Honda Auto Receivables Trust 2020-3 A3 0.37% Due 10/18/2024	09/22/2020 09/29/2020 7,194.07	10,100.75 0.00 2,906.74 7,194.05	1.35 3.11 0.96 2.72	0.04 0.00 0.04 2.76	2.76
43815BAC4	Honda Auto Receivables Trust 2022-1 A3 1.88% Due 05/15/2026	02/15/2022 02/23/2022 165,000.00	164,987.52 0.00 0.00 164,988.17	137.87 258.50 137.87 258.50	0.65 0.00 0.65 259.15	259.15
43815GAC3	Honda Auto Receivables Trust 2021-4 A3 0.88% Due 01/21/2026	11/16/2021 11/24/2021 68,190.98	72,850.24 0.00 4,665.86 68,185.18	17.81 53.43 16.67 52.29	0.80 0.00 0.80 53.09	53.09

Income Earned

As of October 31, 2023

CUSIP	Security Description	Trade Date Settle Date Units	Book Value: Begin Book Value: Acq Book Value: Disp Book Value: End	Prior Accrued Inc. Received Ending Accrued Total Interest	Accr. Of Discount Amort. Of Premium Net Accret/Amort Income Earned	Total Income
43815JAC7	Honda Auto Receivables Owner 2023-1 A3 5.04% Due 04/21/2027	02/16/2023 02/24/2023 70,000.00	69,989.46 0.00 0.00 69,989.81	98.00 294.00 98.00 294.00	0.35 0.00 0.35 294.35	294.35
43815PAC3	Honda Auto Receivables 2022-2 A3 3.73% Due 07/20/2026	08/15/2022 08/24/2022 105,000.00	104,995.99 0.00 0.00 104,996.16	141.43 326.37 141.43 326.37	0.17 0.00 0.17 326.54	326.54
438516CJ3	Honeywell Intl Callable Note Cont 01/15/2028 4.95% Due 02/15/2028	02/13/2023 02/15/2023 400,000.00	407,832.38 0.00 0.00 407,677.43	2,530.00 0.00 4,180.00 1,650.00	0.00 154.95 (154.95) 1,495.05	1,495.05
448979AD6	Hyundai Auto Receivables Trust 2023-A A3 4.58% Due 04/15/2027	04/04/2023 04/12/2023 155,000.00	154,987.45 0.00 0.00 154,987.91	315.51 591.58 315.51 591.58	0.46 0.00 0.46 592.04	592.04
4581X0DZ8	Inter-American Dev Bank Note 0.5% Due 09/23/2024	09/15/2021 09/23/2021 260,000.00	259,937.15 0.00 0.00 259,942.60	28.89 0.00 137.22 108.33	5.45 0.00 5.45 113.78	113.78
459058GQ0	Intl. Bank Recon & Development Note 2.5% Due 03/19/2024	01/26/2021 01/28/2021 225,000.00	227,334.38 0.00 0.00 226,908.70	187.50 0.00 656.25 468.75	0.00 425.68 (425.68) 43.07	43.07
459058JM6	Intl. Bank Recon & Development Note 0.25% Due 11/24/2023	11/17/2020 11/24/2020 165,000.00	164,982.51 0.00 0.00 164,992.55	145.52 0.00 179.90 34.38	10.04 0.00 10.04 44.42	44.42
459058KW2	Intl. Bank Recon & Development Note 4.625% Due 08/01/2028	Various Various 250,000.00	49,697.34 196,710.00 0.00 246,435.26	32.12 (616.67) 1,124.14 475.35	27.92 0.00 27.92 503.27	503.27
45950KCR9	International Finance Corp Note 1.375% Due 10/16/2024	07/12/2021 07/14/2021 160,000.00	161,378.00 0.00 0.00 161,265.88	1,008.33 1,100.80 91.67 184.14	0.00 112.12 (112.12) 72.02	72.02

Income Earned

As of October 31, 2023

CUSIP	Security Description	Trade Date Settle Date Units	Book Value: Begin Book Value: Acq Book Value: Disp Book Value: End	Prior Accrued Inc. Received Ending Accrued Total Interest	Accr. Of Discount Amort. Of Premium Net Accret/Amort Income Earned	Total Income
46647PAH9	JP Morgan Chase & Co Callable Note 2X 3/1/2024 3.22% Due 03/01/2025	Various Various 500,000.00	504,515.19 0.00 0.00 503,594.33	1,341.67 0.00 2,683.33 1,341.66	0.00 920.86 (920.86) 420.80	420.80
47787CAC7	John Deere Owner Trust 2023-C A3 5.48% Due 05/15/2028	09/12/2023 09/19/2023 310,000.00	309,978.90 0.00 0.00 309,979.40	566.27 1,226.91 755.02 1,415.66	0.50 0.00 0.50 1,416.16	1,416.16
47787JAC2	John Deere Owner Trust 2022-A A3 2.32% Due 09/16/2026	03/10/2022 03/16/2022 127,895.34	129,983.92 0.00 2,104.66 127,880.21	134.04 251.33 131.87 249.16	0.95 0.00 0.95 250.11	250.11
47788UAC6	John Deere Owner Trust 2021-A A3 0.36% Due 09/15/2025	03/02/2021 03/10/2021 23,274.22	25,924.93 0.00 2,652.15 23,273.04	4.15 7.78 3.72 7.35	0.26 0.00 0.26 7.61	7.61
47789QAC4	John Deere Owner Trust 2021-B A3 0.52% Due 03/16/2026	07/13/2021 07/21/2021 48,954.19	51,680.08 0.00 2,727.73 48,952.55	11.94 22.40 11.31 21.77	0.20 0.00 0.20 21.97	21.97
47800AAC4	John Deere Owner Trust 2022-B A3 3.74% Due 02/16/2027	07/12/2022 07/20/2022 135,000.00	134,991.43 0.00 0.00 134,991.74	224.40 420.75 224.40 420.75	0.31 0.00 0.31 421.06	421.06
47800BAC2	John Deere Owner Trust 2022-C A3 5.09% Due 06/15/2027	10/12/2022 10/19/2022 220,000.00	219,987.37 0.00 0.00 219,987.76	497.69 933.17 497.69 933.17	0.39 0.00 0.39 933.56	933.56
57636QAW4	MasterCard Inc Callable Note Cont 2/9/28 4.875% Due 03/09/2028	04/19/2023 04/21/2023 290,000.00	298,012.98 0.00 0.00 297,856.94	863.96 0.00 2,042.08 1,178.12	0.00 156.04 (156.04) 1,022.08	1,022.08
58769KAD6	Mercedes-Benz Auto Lease Trust 2021-B A3 0.4% Due 11/15/2024	06/22/2021 06/29/2021 24,041.24	31,343.77 0.00 7,302.80 24,041.09	5.57 10.45 4.27 9.15	0.12 0.00 0.12 9.27	9.27

Income Earned

As of October 31, 2023

CUSIP	Security Description	Trade Date Settle Date Units	Book Value: Begin Book Value: Acq Book Value: Disp Book Value: End	Prior Accrued Inc. Received Ending Accrued Total Interest	Accr. Of Discount Amort. Of Premium Net Accret/Amort Income Earned	Total Income
58770AAC7	Mercedes-Benz Auto Receivable 2023-1 A3 4.51% Due 11/15/2027	01/18/2023 01/25/2023 105,000.00	104,989.88 0.00 0.00 104,990.18	210.47 394.62 210.47 394.62	0.30 0.00 0.30 394.92	394.92
58933YBH7	Merck & Co Callable Note Cont 4/17/2028 4.05% Due 05/17/2028	05/08/2023 05/17/2023 90,000.00	89,932.57 0.00 0.00 89,933.80	1,356.75 0.00 1,660.50 303.75	1.23 0.00 1.23 304.98	304.98
594918BX1	Microsoft Callable Note Cont 12/6/2023 2.875% Due 02/06/2024	03/05/2020 03/09/2020 200,000.00	200,643.10 0.00 0.00 200,341.04	878.47 0.00 1,357.64 479.17	0.00 302.06 (302.06) 177.11	177.11
61747YET8	Morgan Stanley Callable Note Cont 7/17/2025 4.679% Due 07/17/2026	07/18/2022 07/20/2022 175,000.00	175,000.00 0.00 0.00 175,000.00	1,683.14 0.00 2,365.49 682.35	0.00 0.00 0.00 682.35	682.35
63743HFE7	National Rural Utilities Note 3.45% Due 06/15/2025	04/27/2022 05/04/2022 95,000.00	94,985.96 0.00 0.00 94,986.66	965.04 0.00 1,238.17 273.13	0.70 0.00 0.70 273.83	273.83
665859AW4	Northern Trust Company Callable Note Cont 4/10/2027 4% Due 05/10/2027	10/05/2022 10/07/2022 450,000.00	439,713.49 0.00 0.00 439,955.62	7,050.00 0.00 8,550.00 1,500.00	242.13 0.00 242.13 1,742.13	1,742.13
69371RR40	Paccar Financial Corp Note 0.5% Due 08/09/2024	08/03/2021 08/09/2021 80,000.00	79,987.66 0.00 0.00 79,988.88	57.78 0.00 91.11 33.33	1.22 0.00 1.22 34.55	34.55
69371RR57	Paccar Financial Corp Note 0.9% Due 11/08/2024	11/02/2021 11/08/2021 175,000.00	174,996.13 0.00 0.00 174,996.43	625.63 0.00 756.88 131.25	0.30 0.00 0.30 131.55	131.55
74456QBU9	Public Service El & Gas Callable Note Cont 02/01/28 3.7% Due 05/01/2028	09/06/2023 09/08/2023 300,000.00	283,034.10 0.00 0.00 283,348.29	4,625.00 0.00 5,550.00 925.00	314.19 0.00 314.19 1,239.19	1,239.19

Income Earned

As of October 31, 2023

CUSIP	Security Description	Trade Date Settle Date Units	Book Value: Begin Book Value: Acq Book Value: Disp Book Value: End	Prior Accrued Inc. Received Ending Accrued Total Interest	Accr. Of Discount Amort. Of Premium Net Accret/Amort Income Earned	Total Income
78015K7C2	Royal Bank of Canada Note 2.25% Due 11/01/2024	Various Various 500,000.00	507,327.35 0.00 0.00 506,755.19	4,687.51 0.00 5,625.00 937.49	0.00 572.16 (572.16) 365.33	365.33
79466LAG9	Salesforce.com Inc Callable Note Cont 7/15/2022 0.625% Due 07/15/2024	06/29/2021 07/12/2021 35,000.00	34,995.32 0.00 0.00 34,995.83	46.18 0.00 64.41 18.23	0.51 0.00 0.51 18.74	18.74
808513BN4	Charles Schwab Corp Callable Note Cont 2/18/2024 0.75% Due 03/18/2024	Various Various 245,000.00	245,153.39 0.00 0.00 245,119.15	66.36 0.00 219.48 153.12	1.34 35.58 (34.24) 118.88	118.88
857477BR3	State Street Bank Callable Note Cont 2/6/2025 1.746% Due 02/06/2026	02/02/2022 02/07/2022 90,000.00	90,000.00 0.00 0.00 90,000.00	240.08 0.00 371.03 130.95	0.00 0.00 0.00 130.95	130.95
89114QCB2	Toronto Dominion Bank Note 3.25% Due 03/11/2024	Various Various 500,000.00	503,724.35 0.00 0.00 503,011.67	902.78 0.00 2,256.95 1,354.17	0.00 712.68 (712.68) 641.49	641.49
89236TJH9	Toyota Motor Credit Corp Note 0.5% Due 06/18/2024	12/06/2021 12/08/2021 300,000.00	298,786.90 0.00 0.00 298,930.99	429.17 0.00 554.17 125.00	144.09 0.00 144.09 269.09	269.09
89236XAC0	Toyota Auto Receivables 2020-D A3 0.35% Due 01/15/2025	10/06/2020 10/13/2020 3,606.26	5,960.90 0.00 2,354.98 3,606.07	0.93 1.74 0.56 1.37	0.15 0.00 0.15 1.52	1.52
89238FAD5	Toyota Auto Receivables OT 2022-B A3 2.93% Due 09/15/2026	04/07/2022 04/13/2022 115,000.00	114,998.52 0.00 0.00 114,998.59	149.76 280.79 149.76 280.79	0.07 0.00 0.07 280.86	280.86
89238JAC9	Toyota Auto Receivables Trust 2021-D A3 0.71% Due 04/15/2026	11/09/2021 11/15/2021 52,741.54	56,222.33 0.00 3,481.29 52,741.10	17.74 33.27 16.64 32.17	0.06 0.00 0.06 32.23	32.23

Income Earned

As of October 31, 2023

CUSIP	Security Description	Trade Date Settle Date Units	Book Value: Begin Book Value: Acq Book Value: Disp Book Value: End	Prior Accrued Inc. Received Ending Accrued Total Interest	Accr. Of Discount Amort. Of Premium Net Accret/Amort Income Earned	Total Income
9128283F5	US Treasury Note 2.25% Due 11/15/2027	12/20/2022 12/21/2022 800,000.00	752,569.41 0.00 0.00 753,545.74	6,798.91 0.00 8,315.22 1,516.31	976.33 0.00 976.33 2,492.64	2,492.64
9128284Z0	US Treasury Note 2.75% Due 08/31/2025	Various Various 750,000.00	774,881.67 0.00 0.00 773,779.78	1,756.52 0.00 3,513.05 1,756.53	0.00 1,101.89 (1,101.89) 654.64	654.64
9128286L9	US Treasury Note 2.25% Due 03/31/2026	02/25/2022 02/28/2022 750,000.00	756,160.36 0.00 0.00 755,950.96	46.11 0.00 1,475.41 1,429.30	0.00 209.40 (209.40) 1,219.90	1,219.90
912828B66	US Treasury Note 2.75% Due 02/15/2024	02/15/2022 02/16/2022 750,000.00	753,242.87 0.00 0.00 752,509.08	2,634.17 0.00 4,371.60 1,737.43	0.00 733.79 (733.79) 1,003.64	1,003.64
912828R36	US Treasury Note 1.625% Due 05/15/2026	10/14/2021 10/15/2021 250,000.00	254,089.10 0.00 0.00 253,956.64	1,534.48 0.00 1,876.70 342.22	0.00 132.46 (132.46) 209.76	209.76
912828U24	US Treasury Note 2% Due 11/15/2026	03/29/2022 03/30/2022 625,000.00	614,819.47 0.00 0.00 615,096.06	4,721.47 0.00 5,774.46 1,052.99	276.59 0.00 276.59 1,329.58	1,329.58
912828V80	US Treasury Note 2.25% Due 01/31/2024	Various Various 750,000.00	753,502.14 0.00 0.00 752,612.24	2,843.07 0.00 4,264.61 1,421.54	0.00 889.90 (889.90) 531.64	531.64
912828W71	US Treasury Note 2.125% Due 03/31/2024	Various Various 750,000.00	755,397.46 0.00 0.00 754,478.11	43.55 0.00 1,393.45 1,349.90	0.00 919.35 (919.35) 430.55	430.55
912828WJ5	US Treasury Note 2.5% Due 05/15/2024	Various Various 750,000.00	756,385.15 0.00 0.00 755,513.17	7,082.20 0.00 8,661.68 1,579.48	0.00 871.98 (871.98) 707.50	707.50

Income Earned

As of October 31, 2023

CUSIP	Security Description	Trade Date Settle Date Units	Book Value: Begin Book Value: Acq Book Value: Disp Book Value: End	Prior Accrued Inc. Received Ending Accrued Total Interest	Accr. Of Discount Amort. Of Premium Net Accret/Amort Income Earned	Total Income
912828X88	US Treasury Note 2.375% Due 05/15/2027	06/09/2022 06/10/2022 350,000.00	341,675.82 0.00 0.00 341,871.02	3,139.78 0.00 3,840.01 700.23	195.20 0.00 195.20 895.43	895.43
912828Y87	US Treasury Note 1.75% Due 07/31/2024	01/31/2020 01/31/2020 300,000.00	300,962.72 0.00 0.00 300,864.55	884.51 0.00 1,326.77 442.26	0.00 98.17 (98.17) 344.09	344.09
912828YG9	US Treasury Note 1.625% Due 09/30/2026	12/28/2021 12/29/2021 300,000.00	303,341.06 0.00 0.00 303,246.47	13.32 0.00 426.23 412.91	0.00 94.59 (94.59) 318.32	318.32
912828Z52	US Treasury Note 1.375% Due 01/31/2025	02/17/2022 02/18/2022 750,000.00	746,750.71 0.00 0.00 746,957.12	1,737.43 0.00 2,606.15 868.72	206.41 0.00 206.41 1,075.13	1,075.13
912828ZF0	US Treasury Note 0.5% Due 03/31/2025	03/25/2021 03/29/2021 350,000.00	349,591.06 0.00 0.00 349,614.24	4.78 0.00 153.01 148.23	23.18 0.00 23.18 171.41	171.41
912828ZT0	US Treasury Note 0.25% Due 05/31/2025	02/25/2021 02/26/2021 365,000.00	362,909.47 0.00 0.00 363,016.06	306.66 0.00 383.95 77.29	106.59 0.00 106.59 183.88	183.88
91282CAZ4	US Treasury Note 0.375% Due 11/30/2025	Various Various 750,000.00	741,975.78 0.00 0.00 742,290.27	945.19 0.00 1,183.40 238.21	314.49 0.00 314.49 552.70	552.70
91282CBV2	US Treasury Note 0.375% Due 04/15/2024	Various Various 500,000.00	500,025.17 0.00 0.00 500,021.21	865.78 937.50 87.09 158.81	5.05 9.01 (3.96) 154.85	154.85
91282CCG4	US Treasury Note 0.25% Due 06/15/2024	06/17/2021 06/18/2021 400,000.00	399,502.09 0.00 0.00 399,561.91	295.08 0.00 379.78 84.70	59.82 0.00 59.82 144.52	144.52

Income Earned

As of October 31, 2023

CUSIP	Security Description	Trade Date Settle Date Units	Book Value: Begin Book Value: Acq Book Value: Disp Book Value: End	Prior Accrued Inc. Received Ending Accrued Total Interest	Accr. Of Discount Amort. Of Premium Net Accret/Amort Income Earned	Total Income
91282CCT6	US Treasury Note 0.375% Due 08/15/2024	08/25/2021 08/26/2021 400,000.00	399,738.15 0.00 0.00 399,763.60	191.58 0.00 317.93 126.35	25.45 0.00 25.45 151.80	151.80
91282CDH1	US Treasury Note 0.75% Due 11/15/2024	11/18/2021 11/19/2021 750,000.00	749,294.30 0.00 0.00 749,347.53	2,124.66 0.00 2,598.51 473.85	53.23 0.00 53.23 527.08	527.08
91282CEF4	US Treasury Note 2.5% Due 03/31/2027	Various Various 750,000.00	740,162.73 0.00 0.00 740,401.53	51.23 0.00 1,639.35 1,588.12	238.80 0.00 238.80 1,826.92	1,826.92
91282CEY3	US Treasury Note 3% Due 07/15/2025	06/23/2023 06/26/2023 550,000.00	534,193.66 0.00 0.00 534,944.03	3,497.28 0.00 4,887.23 1,389.95	750.37 0.00 750.37 2,140.32	2,140.32
91282CFM8	US Treasury Note 4.125% Due 09/30/2027	10/26/2022 10/27/2022 570,000.00	568,717.03 0.00 0.00 568,744.28	64.24 0.00 2,055.74 1,991.50	27.25 0.00 27.25 2,018.75	2,018.75
91282CFP1	US Treasury Note 4.25% Due 10/15/2025	06/23/2023 06/26/2023 550,000.00	546,445.25 0.00 0.00 546,593.17	10,793.37 11,687.50 1,085.72 1,979.85	147.92 0.00 147.92 2,127.77	2,127.77
91282CGC9	US Treasury Note 3.875% Due 12/31/2027	05/25/2023 05/26/2023 500,000.00	498,051.34 0.00 0.00 498,090.27	4,896.40 0.00 6,528.53 1,632.13	38.93 0.00 38.93 1,671.06	1,671.06
91324PEB4	United Health Group Inc Callable Note Cont 5/15/2022 0.55% Due 05/15/2024	11/24/2021 11/29/2021 500,000.00	498,422.63 0.00 0.00 498,638.04	1,038.89 0.00 1,268.06 229.17	215.41 0.00 215.41 444.58	444.58
92290BAA9	Verizon Owner Trust 2020-B A Due 02/20/2025	08/04/2020 08/12/2020 0.00	811.92 0.00 811.97 0.00	0.12 0.32 0.00 0.20	0.05 0.00 0.05 0.25	0.25

Income Earned

As of October 31, 2023

CUSIP	Security Description	Trade Date Settle Date Units	Book Value: Begin Book Value: Acq Book Value: Disp Book Value: End	Prior Accrued Inc. Received Ending Accrued Total Interest	Accr. Of Discount Amort. Of Premium Net Accret/Amort Income Earned	Total Income
931142ER0	Wal-Mart Stores	09/08/2021	39,955.20	16.33	1.29	36.29
	Callable Note Cont 08/17/2026	09/17/2021	0.00	0.00	0.00	
	1.05% Due 09/17/2026	40,000.00	0.00	51.33	1.29	
			39,956.49	35.00	36.29	
931142EW9	Wal-Mart Stores	09/06/2022	79,963.77	190.67	1.59	261.59
	Note	09/09/2022	0.00	0.00	0.00	
	3.9% Due 09/09/2025	80,000.00	0.00	450.67	1.59	
			79,965.36	260.00	261.59	
931142EX7	Wal-Mart Stores	09/27/2022	219,094.60	543.13	127.22	867.84
	Callable Note Cont 09/09/2027	09/29/2022	0.00	0.00	0.00	
	3.95% Due 09/09/2027	225,000.00	0.00	1,283.75	127.22	
			219,221.82	740.62	867.84	
			31,101,684.82	**120,500.10**	**8,036.16**	
			691,502.58	**28,779.56**	**9,435.12**	
			283,612.34	**158,401.28**	**(1,398.96)**	
Total Fixed Income		**31,703,810.36**	**31,508,176.10**	**66,680.74**	**65,281.78**	**65,281.78**
CASH & EQUIVALENT						
31846V203	First American	09/18/2023	434,313.37	0.00	0.00	1,439.92
	Govt Obligation Fund Class Y	09/18/2023	88,820.54	1,439.92	0.00	
		54,744.55	468,389.36	0.00	0.00	
			54,744.55	1,439.92	1,439.92	
62479LDC6	MUFG Bank Ltd	07/25/2023	581,699.34	0.00	2,924.33	2,924.33
	Discount CP	07/25/2023	0.00	0.00	0.00	
	5.66% Due 04/12/2024	600,000.00	0.00	0.00	2,924.33	
			584,623.67	0.00	2,924.33	
			1,016,012.71	**0.00**	**2,924.33**	
			88,820.54	**1,439.92**	**0.00**	
			468,389.36	**0.00**	**2,924.33**	
Total Cash & Equivalent		**654,744.55**	**639,368.22**	**1,439.92**	**4,364.25**	**4,364.25**

Income Earned

As of October 31, 2023

CUSIP	Security Description	Trade Date Settle Date Units	Book Value: Begin Book Value: Acq Book Value: Disp Book Value: End	Prior Accrued Inc. Received Ending Accrued Total Interest	Accr. Of Discount Amort. Of Premium Net Accret/Amort Income Earned	Total Income
LOCAL AGENCY INVESTMENT FUND						
90LAIF$00	Local Agency Investment Fund State Pool	Various Various 5,394,464.08	5,346,263.84 48,200.24 0.00 5,394,464.08	45,142.12 48,200.24 16,701.26 19,759.38	0.00 0.00 0.00 19,759.38	19,759.38
			5,346,263.84 **48,200.24** **0.00**	**45,142.12** **48,200.24** **16,701.26**	**0.00** **0.00** **0.00**	
Total Local Agency Investment Fund		**5,394,464.08**	**5,394,464.08**	**19,759.38**	**19,759.38**	**19,759.38**
INVESTMENT POOL						
09CATR$05	CalTrust Medium Term Fund	Various Various 681,005.97	6,819,833.67 21,799.76 0.00 6,841,633.43	0.00 21,799.76 0.00 21,799.76	0.00 0.00 0.00 21,799.76	21,799.76
90CAMP$00	California Asset Mgmt Program CAMP	Various Various 42,336,065.14	42,137,198.14 198,867.00 0.00 42,336,065.14	0.00 198,867.00 0.00 198,867.00	0.00 0.00 0.00 198,867.00	198,867.00
			48,957,031.81 **220,666.76** **0.00**	**0.00** **220,666.76** **0.00**	**0.00** **0.00** **0.00**	
Total Investment Pool		**43,017,071.11**	**49,177,698.57**	**220,666.76**	**220,666.76**	**220,666.76**
			86,420,993.18 **1,049,190.12** **752,001.70**	**165,642.22** **299,086.48** **175,102.54**	**10,960.49** **9,435.12** **1,525.37**	
TOTAL PORTFOLIO		**80,770,090.10**	**86,719,706.97**	**308,546.80**	**310,072.17**	**310,072.17**

Payment Date	Transaction Type	CUSIP	Quantity	Security Description	Principal Amount	Income	Total Amount
11/01/2023	Interest	74456QBU9	300,000.00	Public Service El & Gas Callable Note Cont 02/01/28 3.7% Due 5/1/2028	0.00	5,550.00	5,550.00
11/01/2023	Interest	78015K7C2	500,000.00	Royal Bank of Canada Note 2.25% Due 11/1/2024	0.00	5,625.00	5,625.00
11/01/2023	Paydown	3137FJZ93	240,000.00	FHLMC K084 A2 3.78% Due 10/25/2028	0.00	756.00	756.00
11/06/2023	Maturity	3137EAEZ8	335,000.00	FHLMC Note	335,000.00	418.75	335,418.75
11/07/2023	Interest	3135G06G3	350,000.00	FNMA Note 0.5% Due 11/7/2025	0.00	875.00	875.00
11/08/2023	Interest	69371RR57	175,000.00	Paccar Financial Corp Note 0.9% Due 11/8/2024	0.00	787.50	787.50
11/10/2023	Interest	665859AW4	450,000.00	Northern Trust Company Callable Note Cont 4/10/2027 4% Due 5/10/2027	0.00	9,000.00	9,000.00
11/12/2023	Interest	023135BW5	130,000.00	Amazon.com Inc Note 0.45% Due 5/12/2024	0.00	292.50	292.50
11/15/2023	Interest	912828R36	250,000.00	US Treasury Note 1.625% Due 5/15/2026	0.00	2,031.25	2,031.25
11/15/2023	Interest	912828X88	350,000.00	US Treasury Note 2.375% Due 5/15/2027	0.00	4,156.25	4,156.25
11/15/2023	Interest	91282CDH1	750,000.00	US Treasury Note 0.75% Due 11/15/2024	0.00	2,812.50	2,812.50
11/15/2023	Interest	91324PEB4	500,000.00	United Health Group Inc Callable Note Cont 5/15/2022 0.55% Due 5/15/2024	0.00	1,375.00	1,375.00
11/15/2023	Interest	9128283F5	800,000.00	US Treasury Note 2.25% Due 11/15/2027	0.00	9,000.00	9,000.00
11/15/2023	Interest	912828U24	625,000.00	US Treasury Note 2% Due 11/15/2026	0.00	6,250.00	6,250.00
11/15/2023	Interest	912828WJ5	750,000.00	US Treasury Note 2.5% Due 5/15/2024	0.00	9,375.00	9,375.00
11/15/2023	Paydown	02582JJT8	185,000.00	American Express Credit Trust 2022-2 A 3.39% Due 5/17/2027	0.00	522.63	522.63

Cash Flow Report

As of October 31, 2023

Payment Date	Transaction Type	CUSIP	Quantity	Security Description	Principal Amount	Income	Total Amount
11/15/2023	Paydown	43815BAC4	165,000.00	Honda Auto Receivables Trust 2022-1 A3 1.88% Due 5/15/2026	8,346.61	258.50	8,605.11
11/15/2023	Paydown	448979AD6	155,000.00	Hyundai Auto Receivables Trust 2023-A A3 4.58% Due 4/15/2027	0.00	591.58	591.58
11/15/2023	Paydown	47789QAC4	48,954.19	John Deere Owner Trust 2021-B A3 0.52% Due 3/16/2026	2,877.55	21.21	2,898.76
11/15/2023	Paydown	58770AAC7	105,000.00	Mercedes-Benz Auto Receivable 2023-1 A3 4.51% Due 11/15/2027	0.00	394.63	394.63
11/15/2023	Paydown	89238FAD5	115,000.00	Toyota Auto Receivables OT 2022-B A3 2.93% Due 9/15/2026	5,367.61	280.79	5,648.40
11/15/2023	Paydown	161571HT4	340,000.00	Chase Issuance Trust 23-A1 A 5.16% Due 9/15/2028	0.00	1,462.00	1,462.00
11/15/2023	Paydown	47787CAC7	310,000.00	John Deere Owner Trust 2023-C A3 5.48% Due 5/15/2028	0.00	1,415.67	1,415.67
11/15/2023	Paydown	47800AAC4	135,000.00	John Deere Owner Trust 2022-B A3 3.74% Due 2/16/2027	0.00	420.75	420.75
11/15/2023	Paydown	89238JAC9	52,741.54	Toyota Auto Receivables Trust 2021-D A3 0.71% Due 4/15/2026	3,281.74	31.21	3,312.95
11/15/2023	Paydown	02582JKD1	340,000.00	American Express Credit Trust 2023-3 A 5.23% Due 9/15/2028	0.00	1,481.83	1,481.83
11/15/2023	Paydown	47787JAC2	127,895.34	John Deere Owner Trust 2022-A A3 2.32% Due 9/16/2026	5,482.58	247.26	5,729.84
11/15/2023	Paydown	58769KAD6	24,041.24	Mercedes-Benz Auto Lease Trust 2021-B A3 0.4% Due 11/15/2024	8,013.02	8.01	8,021.03
11/15/2023	Paydown	89236XAC0	3,606.26	Toyota Auto Receivables 2020-D A3 0.35% Due 1/15/2025	247.14	1.05	248.19
11/15/2023	Paydown	02582JJZ4	125,000.00	American Express Credit Trust 2023-1 A 4.87% Due 5/15/2028	0.00	507.29	507.29
11/15/2023	Paydown	47788UAC6	23,274.22	John Deere Owner Trust 2021-A A3 0.36% Due 9/15/2025	1,936.06	6.98	1,943.04
11/15/2023	Paydown	47800BAC2	220,000.00	John Deere Owner Trust 2022-C A3 5.09% Due 6/15/2027	0.00	933.17	933.17
11/16/2023	Paydown	36265WAD5	90,000.00	GM Financial Securitized Auto 2022-3 A3 3.64% Due 4/16/2027	0.00	273.00	273.00

Cash Flow Report

As of October 31, 2023

Payment Date	Transaction Type	CUSIP	Quantity	Security Description	Principal Amount	Income	Total Amount
11/16/2023	Paydown	362583AD8	115,000.00	GM Auto Receivable Trust 2023-2 A3 4.47% Due 2/16/2028	0.00	428.38	428.38
11/17/2023	Interest	58933YBH7	90,000.00	Merck & Co Callable Note Cont 4/17/2028 4.05% Due 5/17/2028	0.00	1,822.50	1,822.50
11/17/2023	Interest	14913R2L0	500,000.00	Caterpillar Financial Service Note 0.45% Due 5/17/2024	0.00	1,125.00	1,125.00
11/18/2023	Paydown	43815PAC3	105,000.00	Honda Auto Receivables 2022-2 A3 3.73% Due 7/20/2026	0.00	326.38	326.38
11/18/2023	Paydown	43813KAC6	7,194.07	Honda Auto Receivables Trust 2020-3 A3 0.37% Due 10/18/2024	7,194.07	2.22	7,196.29
11/19/2023	Paydown	3137FEBQ2	0.00	FHLMC K072 A2 3.444% Due 12/25/2027	0.00	1,435.00	1,435.00
11/19/2023	Paydown	3137BNGT5	0.00	FHLMC K054 A2 2.745% Due 1/25/2026	0.00	1,143.75	1,143.75
11/19/2023	Paydown	3137FJEH8	0.00	FHLMC K081 A2 3.9% Due 8/25/2028	0.00	503.75	503.75
11/20/2023	Paydown	379929AD4	75,000.00	GM Financial Auto Leasing 2023-3 A3 5.38% Due 11/20/2026	0.00	336.25	336.25
11/21/2023	Paydown	43815GAC3	68,190.98	Honda Auto Receivables Trust 2021-4 A3 0.88% Due 1/21/2026	4,254.48	50.01	4,304.49
11/21/2023	Paydown	43815JAC7	70,000.00	Honda Auto Receivables Owner 2023-1 A3 5.04% Due 4/21/2027	0.00	294.00	294.00
11/21/2023	Paydown	43813GAC5	19,161.74	Honda Auto Receivables Trust 2021-1 A3 0.27% Due 4/21/2025	3,830.50	4.31	3,834.81
11/24/2023	Maturity	459058JM6	165,000.00	Intl. Bank Recon & Development Note 0.25% Due 11/24/2023	165,000.00	206.25	165,206.25
11/25/2023	Paydown	05601XAC3	38,337.40	BMW Vehicle Lease Trust 2022-1 A3 1.1% Due 3/25/2025	7,600.56	35.14	7,635.70
11/25/2023	Paydown	3137FETN0	465,000.00	FHLMC K073 A2 3.35% Due 1/25/2028	0.00	1,298.13	1,298.13
11/25/2023	Paydown	3137FJEH8	155,000.00	FHLMC K081 A2 3.9% Due 8/25/2028	0.00	503.75	503.75
11/25/2023	Paydown	3137H4BY5	315,000.00	FHLMC K746 A2 2.031% Due 9/25/2028	0.00	533.14	533.14

Cash Flow Report

As of October 31, 2023

Payment Date	Transaction Type	CUSIP	Quantity	Security Description	Principal Amount	Income	Total Amount
11/25/2023	Paydown	09690AAC7	5,413.38	BMW Vehicle Lease Trust 2021-2 A3 0.33% Due 12/26/2024	2,706.36	1.49	2,707.85
11/25/2023	Paydown	3137BNGT5	500,000.00	FHLMC K054 A2 2.745% Due 1/25/2026	0.00	1,143.75	1,143.75
11/25/2023	Paydown	3137FEBQ2	500,000.00	FHLMC K072 A2 3.444% Due 12/25/2027	0.00	1,435.00	1,435.00
11/25/2023	Paydown	05593AAC3	40,000.00	BMW Vehicle Lease Trust 2023-1 A3 5.16% Due 11/25/2025	0.00	172.00	172.00
11/25/2023	Paydown	05602RAD3	300,000.00	BMW Vehicle Owner Trust 2022-A A3 3.21% Due 8/25/2026	33,638.55	802.50	34,441.05
11/30/2023	Interest	91282CAZ4	750,000.00	US Treasury Note 0.375% Due 11/30/2025	0.00	1,406.25	1,406.25
11/30/2023	Interest	912828ZT0	365,000.00	US Treasury Note 0.25% Due 5/31/2025	0.00	456.25	456.25
NOV 2023					**594,776.83**	**82,627.51**	**677,404.34**
12/01/2023	Interest	023135CN4	395,000.00	Amazon.com Inc Note 4.6% Due 12/1/2025	0.00	9,085.00	9,085.00
12/01/2023	Paydown	3137FJZ93	240,000.00	FHLMC K084 A2 3.78% Due 10/25/2028	0.00	756.00	756.00
12/06/2023	Call	594918BX1	200,000.00	Microsoft Callable Note Cont 12/6/2023 2.875% Due 2/6/2024	200,000.00	1,916.67	201,916.67
12/08/2023	Maturity	3130A0F70	350,000.00	FHLB Note 3.375% Due 12/8/2023	350,000.00	5,906.25	355,906.25
12/14/2023	Interest	3130A1XJ2	155,000.00	FHLB Note 2.875% Due 6/14/2024	0.00	2,228.13	2,228.13
12/15/2023	Interest	63743HFE7	95,000.00	National Rural Utilities Note 3.45% Due 6/15/2025	0.00	1,638.75	1,638.75
12/15/2023	Interest	91282CCG4	400,000.00	US Treasury Note 0.25% Due 6/15/2024	0.00	500.00	500.00
12/15/2023	Paydown	02582JKD1	340,000.00	American Express Credit Trust 2023-3 A 5.23% Due 9/15/2028	0.00	1,481.83	1,481.83
12/15/2023	Paydown	47787CAC7	310,000.00	John Deere Owner Trust 2023-C A3 5.48% Due 5/15/2028	0.00	1,415.67	1,415.67

Cash Flow Report

As of October 31, 2023

Payment Date	Transaction Type	CUSIP	Quantity	Security Description	Principal Amount	Income	Total Amount
12/15/2023	Paydown	02582JJT8	185,000.00	American Express Credit Trust 2022-2 A 3.39% Due 5/17/2027	0.00	522.63	522.63
12/15/2023	Paydown	02582JJZ4	125,000.00	American Express Credit Trust 2023-1 A 4.87% Due 5/15/2028	0.00	507.29	507.29
12/15/2023	Paydown	161571HT4	340,000.00	Chase Issuance Trust 23-A1 A 5.16% Due 9/15/2028	0.00	1,462.00	1,462.00
12/15/2023	Paydown	47788UAC6	23,274.22	John Deere Owner Trust 2021-A A3 0.36% Due 9/15/2025	1,936.68	6.40	1,943.08
12/15/2023	Paydown	47789QAC4	48,954.19	John Deere Owner Trust 2021-B A3 0.52% Due 3/16/2026	2,877.81	19.97	2,897.78
12/15/2023	Paydown	58770AAC7	105,000.00	Mercedes-Benz Auto Receivable 2023-1 A3 4.51% Due 11/15/2027	0.00	394.63	394.63
12/15/2023	Paydown	89238FAD5	115,000.00	Toyota Auto Receivables OT 2022-B A3 2.93% Due 9/15/2026	5,378.32	267.69	5,646.01
12/15/2023	Paydown	47787JAC2	127,895.34	John Deere Owner Trust 2022-A A3 2.32% Due 9/16/2026	5,489.61	236.66	5,726.27
12/15/2023	Paydown	47800AAC4	135,000.00	John Deere Owner Trust 2022-B A3 3.74% Due 2/16/2027	0.00	420.75	420.75
12/15/2023	Paydown	47800BAC2	220,000.00	John Deere Owner Trust 2022-C A3 5.09% Due 6/15/2027	0.00	933.17	933.17
12/15/2023	Paydown	58769KAD6	24,041.24	Mercedes-Benz Auto Lease Trust 2021-B A3 0.4% Due 11/15/2024	8,013.75	5.34	8,019.09
12/15/2023	Paydown	89238JAC9	52,741.54	Toyota Auto Receivables Trust 2021-D A3 0.71% Due 4/15/2026	3,283.69	29.26	3,312.95
12/15/2023	Paydown	43815BAC4	165,000.00	Honda Auto Receivables Trust 2022-1 A3 1.88% Due 5/15/2026	8,383.20	245.42	8,628.62
12/15/2023	Paydown	448979AD6	155,000.00	Hyundai Auto Receivables Trust 2023-A A3 4.58% Due 4/15/2027	0.00	591.58	591.58
12/15/2023	Paydown	89236XAC0	3,606.26	Toyota Auto Receivables 2020-D A3 0.35% Due 1/15/2025	246.22	0.98	247.20
12/16/2023	Paydown	362583AD8	115,000.00	GM Auto Receivable Trust 2023-2 A3 4.47% Due 2/16/2028	0.00	428.38	428.38
12/16/2023	Paydown	36265WAD5	90,000.00	GM Financial Securitized Auto 2022-3 A3 3.64% Due 4/16/2027	0.00	273.00	273.00

Cash Flow Report

As of October 31, 2023

Payment Date	Transaction Type	CUSIP	Quantity	Security Description	Principal Amount	Income	Total Amount
12/18/2023	Interest	89236TJH9	300,000.00	Toyota Motor Credit Corp Note 0.5% Due 6/18/2024	0.00	750.00	750.00
12/18/2023	Paydown	43815PAC3	105,000.00	Honda Auto Receivables 2022-2 A3 3.73% Due 7/20/2026	0.00	326.38	326.38
12/20/2023	Paydown	379929AD4	75,000.00	GM Financial Auto Leasing 2023-3 A3 5.38% Due 11/20/2026	0.00	336.25	336.25
12/21/2023	Paydown	43813GAC5	19,161.74	Honda Auto Receivables Trust 2021-1 A3 0.27% Due 4/21/2025	3,831.42	3.45	3,834.87
12/21/2023	Paydown	43815JAC7	70,000.00	Honda Auto Receivables Owner 2023-1 A3 5.04% Due 4/21/2027	0.00	294.00	294.00
12/21/2023	Paydown	43815GAC3	68,190.98	Honda Auto Receivables Trust 2021-4 A3 0.88% Due 1/21/2026	4,255.47	46.89	4,302.36
12/25/2023	Paydown	3137FEBQ2	500,000.00	FHLMC K072 A2 3.444% Due 12/25/2027	0.00	1,435.00	1,435.00
12/25/2023	Paydown	3137FETN0	465,000.00	FHLMC K073 A2 3.35% Due 1/25/2028	0.00	1,298.13	1,298.13
12/25/2023	Paydown	3137H4BY5	315,000.00	FHLMC K746 A2 2.031% Due 9/25/2028	0.00	533.14	533.14
12/25/2023	Paydown	05601XAC3	38,337.40	BMW Vehicle Lease Trust 2022-1 A3 1.1% Due 3/25/2025	7,633.87	28.18	7,662.05
12/25/2023	Paydown	09690AAC7	5,413.38	BMW Vehicle Lease Trust 2021-2 A3 0.33% Due 12/26/2024	2,707.02	0.74	2,707.76
12/25/2023	Paydown	05593AAC3	40,000.00	BMW Vehicle Lease Trust 2023-1 A3 5.16% Due 11/25/2025	0.00	172.00	172.00
12/25/2023	Paydown	05602RAD3	300,000.00	BMW Vehicle Owner Trust 2022-A A3 3.21% Due 8/25/2026	31,699.23	712.52	32,411.75
12/25/2023	Paydown	3137BNGT5	500,000.00	FHLMC K054 A2 2.745% Due 1/25/2026	0.00	1,143.75	1,143.75
12/25/2023	Paydown	3137FJEH8	155,000.00	FHLMC K081 A2 3.9% Due 8/25/2028	0.00	503.75	503.75
12/31/2023	Interest	91282CGC9	500,000.00	US Treasury Note 3.875% Due 12/31/2027	0.00	9,687.50	9,687.50
DEC 2023					**635,736.29**	**48,545.13**	**684,281.42**

Payment Date	Transaction Type	CUSIP	Quantity	Security Description	Principal Amount	Income	Total Amount
01/01/2024	Paydown	3137FJZ93	240,000.00	FHLMC K084 A2 3.78% Due 10/25/2028	0.00	756.00	756.00
01/06/2024	Interest	3133ENKS8	750,000.00	FFCB Note 1.125% Due 1/6/2025	0.00	4,218.76	4,218.76
01/15/2024	Dividend	90LAIF$00	166,505,382.88	Local Agency Investment Fund State Pool	0.00	16,696.17	16,696.17
01/15/2024	Interest	91282CEY3	550,000.00	US Treasury Note 3% Due 7/15/2025	0.00	8,250.00	8,250.00
01/15/2024	Interest	79466LAG9	35,000.00	Salesforce.com Inc Callable Note Cont 7/15/2022 0.625% Due 7/15/2024	0.00	109.38	109.38
01/15/2024	Paydown	89236XAC0	3,606.26	Toyota Auto Receivables 2020-D A3 0.35% Due 1/15/2025	245.29	0.91	246.20
01/15/2024	Paydown	02582JKD1	340,000.00	American Express Credit Trust 2023-3 A 5.23% Due 9/15/2028	0.00	1,481.83	1,481.83
01/15/2024	Paydown	58769KAD6	24,041.24	Mercedes-Benz Auto Lease Trust 2021-B A3 0.4% Due 11/15/2024	8,014.48	2.67	8,017.15
01/15/2024	Paydown	43815BAC4	165,000.00	Honda Auto Receivables Trust 2022-1 A3 1.88% Due 5/15/2026	8,419.94	232.29	8,652.23
01/15/2024	Paydown	448979AD6	155,000.00	Hyundai Auto Receivables Trust 2023-A A3 4.58% Due 4/15/2027	0.00	591.58	591.58
01/15/2024	Paydown	47789QAC4	48,954.19	John Deere Owner Trust 2021-B A3 0.52% Due 3/16/2026	2,878.07	18.72	2,896.79
01/15/2024	Paydown	58770AAC7	105,000.00	Mercedes-Benz Auto Receivable 2023-1 A3 4.51% Due 11/15/2027	0.00	394.63	394.63
01/15/2024	Paydown	89238FAD5	115,000.00	Toyota Auto Receivables OT 2022-B A3 2.93% Due 9/15/2026	5,389.07	254.55	5,643.62
01/15/2024	Paydown	02582JJT8	185,000.00	American Express Credit Trust 2022-2 A 3.39% Due 5/17/2027	0.00	522.63	522.63
01/15/2024	Paydown	02582JJZ4	125,000.00	American Express Credit Trust 2023-1 A 4.87% Due 5/15/2028	0.00	507.29	507.29
01/15/2024	Paydown	161571HT4	340,000.00	Chase Issuance Trust 23-A1 A 5.16% Due 9/15/2028	0.00	1,462.00	1,462.00
01/15/2024	Paydown	47787CAC7	310,000.00	John Deere Owner Trust 2023-C A3 5.48% Due 5/15/2028	0.00	1,415.67	1,415.67

Payment Date	Transaction Type	CUSIP	Quantity	Security Description	Principal Amount	Income	Total Amount
01/15/2024	Paydown	47787JAC2	127,895.34	John Deere Owner Trust 2022-A A3 2.32% Due 9/16/2026	5,496.65	226.05	5,722.70
01/15/2024	Paydown	47788UAC6	23,274.22	John Deere Owner Trust 2021-A A3 0.36% Due 9/15/2025	1,937.31	5.82	1,943.13
01/15/2024	Paydown	47800AAC4	135,000.00	John Deere Owner Trust 2022-B A3 3.74% Due 2/16/2027	0.00	420.75	420.75
01/15/2024	Paydown	47800BAC2	220,000.00	John Deere Owner Trust 2022-C A3 5.09% Due 6/15/2027	0.00	933.17	933.17
01/15/2024	Paydown	89238JAC9	52,741.54	Toyota Auto Receivables Trust 2021-D A3 0.71% Due 4/15/2026	3,285.63	27.32	3,312.95
01/16/2024	Paydown	36265WAD5	90,000.00	GM Financial Securitized Auto 2022-3 A3 3.64% Due 4/16/2027	0.00	273.00	273.00
01/16/2024	Paydown	362583AD8	115,000.00	GM Auto Receivable Trust 2023-2 A3 4.47% Due 2/16/2028	0.00	428.38	428.38
01/17/2024	Interest	61747YET8	175,000.00	Morgan Stanley Callable Note Cont 7/17/2025 4.679% Due 7/17/2026	0.00	4,094.13	4,094.13
01/18/2024	Paydown	43815PAC3	105,000.00	Honda Auto Receivables 2022-2 A3 3.73% Due 7/20/2026	0.00	326.38	326.38
01/20/2024	Paydown	379929AD4	75,000.00	GM Financial Auto Leasing 2023-3 A3 5.38% Due 11/20/2026	0.00	336.25	336.25
01/21/2024	Paydown	43815GAC3	68,190.98	Honda Auto Receivables Trust 2021-4 A3 0.88% Due 1/21/2026	4,256.46	43.77	4,300.23
01/21/2024	Paydown	43815JAC7	70,000.00	Honda Auto Receivables Owner 2023-1 A3 5.04% Due 4/21/2027	0.00	294.00	294.00
01/21/2024	Paydown	43813GAC5	19,161.74	Honda Auto Receivables Trust 2021-1 A3 0.27% Due 4/21/2025	3,832.35	2.59	3,834.94
01/25/2024	Paydown	3137BNGT5	500,000.00	FHLMC K054 A2 2.745% Due 1/25/2026	0.00	1,143.75	1,143.75
01/25/2024	Paydown	3137FETN0	465,000.00	FHLMC K073 A2 3.35% Due 1/25/2028	0.00	1,298.13	1,298.13
01/25/2024	Paydown	3137H4BY5	315,000.00	FHLMC K746 A2 2.031% Due 9/25/2028	0.00	533.14	533.14
01/25/2024	Paydown	05601XAC3	38,337.40	BMW Vehicle Lease Trust 2022-1 A3 1.1% Due 3/25/2025	7,667.33	21.18	7,688.51

Cash Flow Report

As of October 31, 2023

Payment Date	Transaction Type	CUSIP	Quantity	Security Description	Principal Amount	Income	Total Amount
01/25/2024	Paydown	3137FEBQ2	500,000.00	FHLMC K072 A2 3.444% Due 12/25/2027	0.00	1,435.00	1,435.00
01/25/2024	Paydown	05593AAC3	40,000.00	BMW Vehicle Lease Trust 2023-1 A3 5.16% Due 11/25/2025	0.00	172.00	172.00
01/25/2024	Paydown	05602RAD3	300,000.00	BMW Vehicle Owner Trust 2022-A A3 3.21% Due 8/25/2026	29,756.18	627.72	30,383.90
01/25/2024	Paydown	3137FJEH8	155,000.00	FHLMC K081 A2 3.9% Due 8/25/2028	0.00	503.75	503.75
01/31/2024	Interest	912828Z52	750,000.00	US Treasury Note 1.375% Due 1/31/2025	0.00	5,156.25	5,156.25
01/31/2024	Interest	912828Y87	300,000.00	US Treasury Note 1.75% Due 7/31/2024	0.00	2,625.00	2,625.00
01/31/2024	Maturity	912828V80	750,000.00	US Treasury Note 2.25% Due 1/31/2024	750,000.00	8,437.50	758,437.50
JAN 2024					**831,178.76**	**66,280.11**	**897,458.87**
02/01/2024	Interest	459058KW2	250,000.00	Intl. Bank Recon & Development Note 4.625% Due 8/1/2028	0.00	4,014.76	4,014.76
02/01/2024	Paydown	3137FJZ93	240,000.00	FHLMC K084 A2 3.78% Due 10/25/2028	0.00	756.00	756.00
02/06/2024	Interest	857477BR3	90,000.00	State Street Bank Callable Note Cont 2/6/2025 1.746% Due 2/6/2026	0.00	785.70	785.70
02/09/2024	Interest	69371RR40	80,000.00	Paccar Financial Corp Note 0.5% Due 8/9/2024	0.00	200.00	200.00
02/14/2024	Interest	3133ENPG9	415,000.00	FFCB Note 1.75% Due 2/14/2025	0.00	3,631.25	3,631.25
02/15/2024	Interest	438516CJ3	400,000.00	Honeywell Intl Callable Note Cont 01/15/2028 4.95% Due 2/15/2028	0.00	9,900.00	9,900.00
02/15/2024	Interest	91282CCT6	400,000.00	US Treasury Note 0.375% Due 8/15/2024	0.00	750.00	750.00
02/15/2024	Maturity	912828B66	750,000.00	US Treasury Note 2.75% Due 2/15/2024	750,000.00	10,312.50	760,312.50
02/15/2024	Paydown	47789QAC4	48,954.19	John Deere Owner Trust 2021-B A3 0.52% Due 3/16/2026	2,878.34	17.47	2,895.81

Cash Flow Report

As of October 31, 2023

Payment Date	Transaction Type	CUSIP	Quantity	Security Description	Principal Amount	Income	Total Amount
02/15/2024	Paydown	58770AAC7	105,000.00	Mercedes-Benz Auto Receivable 2023-1 A3 4.51% Due 11/15/2027	0.00	394.63	394.63
02/15/2024	Paydown	89236XAC0	3,606.26	Toyota Auto Receivables 2020-D A3 0.35% Due 1/15/2025	244.35	0.84	245.19
02/15/2024	Paydown	89238FAD5	115,000.00	Toyota Auto Receivables OT 2022-B A3 2.93% Due 9/15/2026	5,399.83	241.40	5,641.23
02/15/2024	Paydown	161571HT4	340,000.00	Chase Issuance Trust 23-A1 A 5.16% Due 9/15/2028	0.00	1,462.00	1,462.00
02/15/2024	Paydown	43815BAC4	165,000.00	Honda Auto Receivables Trust 2022-1 A3 1.88% Due 5/15/2026	8,456.85	219.10	8,675.95
02/15/2024	Paydown	02582JJZ4	125,000.00	American Express Credit Trust 2023-1 A 4.87% Due 5/15/2028	0.00	507.29	507.29
02/15/2024	Paydown	47787JAC2	127,895.34	John Deere Owner Trust 2022-A A3 2.32% Due 9/16/2026	5,503.71	215.42	5,719.13
02/15/2024	Paydown	02582JJT8	185,000.00	American Express Credit Trust 2022-2 A 3.39% Due 5/17/2027	0.00	522.63	522.63
02/15/2024	Paydown	47787CAC7	310,000.00	John Deere Owner Trust 2023-C A3 5.48% Due 5/15/2028	0.00	1,415.67	1,415.67
02/15/2024	Paydown	47788UAC6	23,274.22	John Deere Owner Trust 2021-A A3 0.36% Due 9/15/2025	1,937.94	5.24	1,943.18
02/15/2024	Paydown	47800AAC4	135,000.00	John Deere Owner Trust 2022-B A3 3.74% Due 2/16/2027	0.00	420.75	420.75
02/15/2024	Paydown	89238JAC9	52,741.54	Toyota Auto Receivables Trust 2021-D A3 0.71% Due 4/15/2026	3,287.57	25.38	3,312.95
02/15/2024	Paydown	02582JKD1	340,000.00	American Express Credit Trust 2023-3 A 5.23% Due 9/15/2028	0.00	1,481.83	1,481.83
02/15/2024	Paydown	448979AD6	155,000.00	Hyundai Auto Receivables Trust 2023-A A3 4.58% Due 4/15/2027	0.00	591.58	591.58
02/15/2024	Paydown	47800BAC2	220,000.00	John Deere Owner Trust 2022-C A3 5.09% Due 6/15/2027	0.00	933.17	933.17
02/16/2024	Paydown	36265WAD5	90,000.00	GM Financial Securitized Auto 2022-3 A3 3.64% Due 4/16/2027	0.00	273.00	273.00
02/16/2024	Paydown	362583AD8	115,000.00	GM Auto Receivable Trust 2023-2 A3 4.47% Due 2/16/2028	0.00	428.38	428.38

Cash Flow Report

As of October 31, 2023

Payment Date	Transaction Type	CUSIP	Quantity	Security Description	Principal Amount	Income	Total Amount
02/18/2024	Call	808513BN4	150,000.00	Charles Schwab Corp Callable Note Cont 2/18/2024 0.75% Due 3/18/2024	150,000.00	468.75	150,468.75
02/18/2024	Interest	06428CAA2	300,000.00	Bank Of America NA Callable Note cont 7/17/2026 5.526% Due 8/18/2026	0.00	8,289.00	8,289.00
02/18/2024	Paydown	43815PAC3	105,000.00	Honda Auto Receivables 2022-2 A3 3.73% Due 7/20/2026	0.00	326.38	326.38
02/20/2024	Paydown	379929AD4	75,000.00	GM Financial Auto Leasing 2023-3 A3 5.38% Due 11/20/2026	0.00	336.25	336.25
02/21/2024	Paydown	43815GAC3	68,190.98	Honda Auto Receivables Trust 2021-4 A3 0.88% Due 1/21/2026	4,257.47	40.64	4,298.11
02/21/2024	Paydown	43815JAC7	70,000.00	Honda Auto Receivables Owner 2023-1 A3 5.04% Due 4/21/2027	0.00	294.00	294.00
02/21/2024	Paydown	43813GAC5	19,161.74	Honda Auto Receivables Trust 2021-1 A3 0.27% Due 4/21/2025	3,833.27	1.73	3,835.00
02/23/2024	Interest	037833BY5	400,000.00	Apple Inc Callable Note Cont 11/23/2025 3.25% Due 2/23/2026	0.00	6,500.00	6,500.00
02/25/2024	Paydown	05601XAC3	38,337.40	BMW Vehicle Lease Trust 2022-1 A3 1.1% Due 3/25/2025	7,700.94	14.15	7,715.09
02/25/2024	Paydown	05593AAC3	40,000.00	BMW Vehicle Lease Trust 2023-1 A3 5.16% Due 11/25/2025	0.00	172.00	172.00
02/25/2024	Paydown	05602RAD3	300,000.00	BMW Vehicle Owner Trust 2022-A A3 3.21% Due 8/25/2026	27,809.37	548.12	28,357.49
02/25/2024	Paydown	3137FJEH8	155,000.00	FHLMC K081 A2 3.9% Due 8/25/2028	0.00	503.75	503.75
02/25/2024	Paydown	3137FEBQ2	500,000.00	FHLMC K072 A2 3.444% Due 12/25/2027	0.00	1,435.00	1,435.00
02/25/2024	Paydown	3137FETN0	465,000.00	FHLMC K073 A2 3.35% Due 1/25/2028	0.00	1,298.13	1,298.13
02/25/2024	Paydown	3137BNGT5	500,000.00	FHLMC K054 A2 2.745% Due 1/25/2026	0.00	1,143.75	1,143.75
02/25/2024	Paydown	3137H4BY5	315,000.00	FHLMC K746 A2 2.031% Due 9/25/2028	0.00	533.14	533.14
02/29/2024	Interest	9128284Z0	750,000.00	US Treasury Note 2.75% Due 8/31/2025	0.00	10,312.50	10,312.50

Cash Flow Report

As of October 31, 2023

Payment Date	Transaction Type	CUSIP	Quantity	Security Description	Principal Amount	Income	Total Amount
FEB 2024					**971,309.64**	**71,723.28**	**1,043,032.92**
03/01/2024	Call	46647PAH9	500,000.00	JP Morgan Chase & Co Callable Note 2X 3/1/2024 3.22% Due 3/1/2025	500,000.00	8,050.00	508,050.00
03/01/2024	Paydown	3137FJZ93	240,000.00	FHLMC K084 A2 3.78% Due 10/25/2028	0.00	756.00	756.00
03/07/2024	Interest	24422EWB1	130,000.00	John Deere Capital Corp Note 2.125% Due 3/7/2025	0.00	1,381.25	1,381.25
03/08/2024	Maturity	3130AT3H8	460,000.00	FHLB Note 3.375% Due 3/8/2024	460,000.00	7,762.50	467,762.50
03/09/2024	Interest	931142EW9	80,000.00	Wal-Mart Stores Note 3.9% Due 9/9/2025	0.00	1,560.00	1,560.00
03/09/2024	Interest	931142EX7	225,000.00	Wal-Mart Stores Callable Note Cont 09/09/2027 3.95% Due 9/9/2027	0.00	4,443.75	4,443.75
03/09/2024	Interest	57636QAW4	290,000.00	MasterCard Inc Callable Note Cont 2/9/28 4.875% Due 3/9/2028	0.00	7,068.75	7,068.75
03/10/2024	Interest	3130ATS57	700,000.00	FHLB Note 4.5% Due 3/10/2028	0.00	15,750.00	15,750.00
03/11/2024	Maturity	89114QCB2	500,000.00	Toronto Dominion Bank Note 3.25% Due 3/11/2024	500,000.00	8,125.00	508,125.00
03/15/2024	Interest	437076CR1	110,000.00	Home Depot Callable Note Cont 8/15/2025 4% Due 9/15/2025	0.00	2,200.00	2,200.00
03/15/2024	Paydown	89236XAC0	3,606.26	Toyota Auto Receivables 2020-D A3 0.35% Due 1/15/2025	243.40	0.77	244.17
03/15/2024	Paydown	02582JJZ4	125,000.00	American Express Credit Trust 2023-1 A 4.87% Due 5/15/2028	0.00	507.29	507.29
03/15/2024	Paydown	161571HT4	340,000.00	Chase Issuance Trust 23-A1 A 5.16% Due 9/15/2028	0.00	1,462.00	1,462.00
03/15/2024	Paydown	47787JAC2	127,895.34	John Deere Owner Trust 2022-A A3 2.32% Due 9/16/2026	5,510.77	204.78	5,715.55
03/15/2024	Paydown	47789QAC4	48,954.19	John Deere Owner Trust 2021-B A3 0.52% Due 3/16/2026	2,878.60	16.23	2,894.83
03/15/2024	Paydown	58770AAC7	105,000.00	Mercedes-Benz Auto Receivable 2023-1 A3 4.51% Due 11/15/2027	0.00	394.63	394.63

Cash Flow Report

As of October 31, 2023

Payment Date	Transaction Type	CUSIP	Quantity	Security Description	Principal Amount	Income	Total Amount
03/15/2024	Paydown	89238FAD5	115,000.00	Toyota Auto Receivables OT 2022-B A3 2.93% Due 9/15/2026	5,410.62	228.21	5,638.83
03/15/2024	Paydown	02582JJT8	185,000.00	American Express Credit Trust 2022-2 A 3.39% Due 5/17/2027	0.00	522.63	522.63
03/15/2024	Paydown	47788UAC6	23,274.22	John Deere Owner Trust 2021-A A3 0.36% Due 9/15/2025	1,938.57	4.66	1,943.23
03/15/2024	Paydown	02582JKD1	340,000.00	American Express Credit Trust 2023-3 A 5.23% Due 9/15/2028	0.00	1,481.83	1,481.83
03/15/2024	Paydown	43815BAC4	165,000.00	Honda Auto Receivables Trust 2022-1 A3 1.88% Due 5/15/2026	8,493.92	205.85	8,699.77
03/15/2024	Paydown	448979AD6	155,000.00	Hyundai Auto Receivables Trust 2023-A A3 4.58% Due 4/15/2027	0.00	591.58	591.58
03/15/2024	Paydown	47787CAC7	310,000.00	John Deere Owner Trust 2023-C A3 5.48% Due 5/15/2028	0.00	1,415.67	1,415.67
03/15/2024	Paydown	47800AAC4	135,000.00	John Deere Owner Trust 2022-B A3 3.74% Due 2/16/2027	5,496.86	420.75	5,917.61
03/15/2024	Paydown	47800BAC2	220,000.00	John Deere Owner Trust 2022-C A3 5.09% Due 6/15/2027	0.00	933.17	933.17
03/15/2024	Paydown	89238JAC9	52,741.54	Toyota Auto Receivables Trust 2021-D A3 0.71% Due 4/15/2026	3,289.52	23.43	3,312.95
03/16/2024	Paydown	36265WAD5	90,000.00	GM Financial Securitized Auto 2022-3 A3 3.64% Due 4/16/2027	0.00	273.00	273.00
03/16/2024	Paydown	362583AD8	115,000.00	GM Auto Receivable Trust 2023-2 A3 4.47% Due 2/16/2028	0.00	428.38	428.38
03/17/2024	Interest	931142ER0	40,000.00	Wal-Mart Stores Callable Note Cont 08/17/2026 1.05% Due 9/17/2026	0.00	210.00	210.00
03/18/2024	Maturity	808513BN4	95,000.00	Charles Schwab Corp Callable Note Cont 2/18/2024 0.75% Due 3/18/2024	95,000.00	356.25	95,356.25
03/18/2024	Paydown	43815PAC3	105,000.00	Honda Auto Receivables 2022-2 A3 3.73% Due 7/20/2026	5,514.30	326.38	5,840.68
03/19/2024	Maturity	459058GQ0	225,000.00	Intl. Bank Recon & Development Note 2.5% Due 3/19/2024	225,000.00	2,812.50	227,812.50
03/20/2024	Paydown	379929AD4	75,000.00	GM Financial Auto Leasing 2023-3 A3 5.38% Due 11/20/2026	0.00	336.25	336.25

Cash Flow Report

As of October 31, 2023

Payment Date	Transaction Type	CUSIP	Quantity	Security Description	Principal Amount	Income	Total Amount
03/21/2024	Paydown	43813GAC5	19,161.74	Honda Auto Receivables Trust 2021-1 A3 0.27% Due 4/21/2025	3,834.20	0.86	3,835.06
03/21/2024	Paydown	43815JAC7	70,000.00	Honda Auto Receivables Owner 2023-1 A3 5.04% Due 4/21/2027	0.00	294.00	294.00
03/21/2024	Paydown	43815GAC3	68,190.98	Honda Auto Receivables Trust 2021-4 A3 0.88% Due 1/21/2026	4,258.46	37.52	4,295.98
03/23/2024	Interest	4581X0DZ8	260,000.00	Inter-American Dev Bank Note 0.5% Due 9/23/2024	0.00	650.00	650.00
03/25/2024	Paydown	05601XAC3	38,337.40	BMW Vehicle Lease Trust 2022-1 A3 1.1% Due 3/25/2025	7,734.70	7.09	7,741.79
03/25/2024	Paydown	05602RAD3	300,000.00	BMW Vehicle Owner Trust 2022-A A3 3.21% Due 8/25/2026	25,858.79	473.73	26,332.52
03/25/2024	Paydown	3137FEBQ2	500,000.00	FHLMC K072 A2 3.444% Due 12/25/2027	0.00	1,435.00	1,435.00
03/25/2024	Paydown	3137FJEH8	155,000.00	FHLMC K081 A2 3.9% Due 8/25/2028	0.00	503.75	503.75
03/25/2024	Paydown	05593AAC3	40,000.00	BMW Vehicle Lease Trust 2023-1 A3 5.16% Due 11/25/2025	0.00	172.00	172.00
03/25/2024	Paydown	3137BNGT5	500,000.00	FHLMC K054 A2 2.745% Due 1/25/2026	0.00	1,143.75	1,143.75
03/25/2024	Paydown	3137FETN0	465,000.00	FHLMC K073 A2 3.35% Due 1/25/2028	0.00	1,298.13	1,298.13
03/25/2024	Paydown	3137H4BY5	315,000.00	FHLMC K746 A2 2.031% Due 9/25/2028	0.00	533.14	533.14
03/31/2024	Interest	9128286L9	750,000.00	US Treasury Note 2.25% Due 3/31/2026	0.00	8,437.50	8,437.50
03/31/2024	Interest	91282CFM8	570,000.00	US Treasury Note 4.125% Due 9/30/2027	0.00	11,756.25	11,756.25
03/31/2024	Interest	912828YG9	300,000.00	US Treasury Note 1.625% Due 9/30/2026	0.00	2,437.50	2,437.50
03/31/2024	Interest	912828ZF0	350,000.00	US Treasury Note 0.5% Due 3/31/2025	0.00	875.00	875.00
03/31/2024	Interest	91282CEF4	750,000.00	US Treasury Note 2.5% Due 3/31/2027	0.00	9,375.00	9,375.00

Cash Flow Report

As of October 31, 2023

Payment Date	Transaction Type	CUSIP	Quantity	Security Description	Principal Amount	Income	Total Amount
03/31/2024	Maturity	912828W71	750,000.00	US Treasury Note 2.125% Due 3/31/2024	750,000.00	7,968.75	757,968.75
MAR 2024					**2,610,462.71**	**117,652.46**	**2,728,115.17**
04/01/2024	Paydown	3137FJZ93	240,000.00	FHLMC K084 A2 3.78% Due 10/25/2028	0.00	756.00	756.00
04/12/2024	Maturity	62479LDC6	600,000.00	MUFG Bank Ltd Discount CP 5.66% Due 4/12/2024	600,000.00	0.00	600,000.00
04/15/2024	Interest	91282CFP1	550,000.00	US Treasury Note 4.25% Due 10/15/2025	0.00	11,687.50	11,687.50
04/15/2024	Maturity	91282CBV2	500,000.00	US Treasury Note 0.375% Due 4/15/2024	500,000.00	937.50	500,937.50
04/15/2024	Paydown	02582JKD1	340,000.00	American Express Credit Trust 2023-3 A 5.23% Due 9/15/2028	0.00	1,481.83	1,481.83
04/15/2024	Paydown	448979AD6	155,000.00	Hyundai Auto Receivables Trust 2023-A A3 4.58% Due 4/15/2027	0.00	591.58	591.58
04/15/2024	Paydown	47789QAC4	48,954.19	John Deere Owner Trust 2021-B A3 0.52% Due 3/16/2026	2,878.86	14.98	2,893.84
04/15/2024	Paydown	58770AAC7	105,000.00	Mercedes-Benz Auto Receivable 2023-1 A3 4.51% Due 11/15/2027	0.00	394.63	394.63
04/15/2024	Paydown	89236XAC0	3,606.26	Toyota Auto Receivables 2020-D A3 0.35% Due 1/15/2025	242.46	0.69	243.15
04/15/2024	Paydown	89238FAD5	115,000.00	Toyota Auto Receivables OT 2022-B A3 2.93% Due 9/15/2026	5,421.43	215.00	5,636.43
04/15/2024	Paydown	02582JJZ4	125,000.00	American Express Credit Trust 2023-1 A 4.87% Due 5/15/2028	0.00	507.29	507.29
04/15/2024	Paydown	47787JAC2	127,895.34	John Deere Owner Trust 2022-A A3 2.32% Due 9/16/2026	5,517.84	194.13	5,711.97
04/15/2024	Paydown	47800BAC2	220,000.00	John Deere Owner Trust 2022-C A3 5.09% Due 6/15/2027	0.00	933.17	933.17
04/15/2024	Paydown	02582JJT8	185,000.00	American Express Credit Trust 2022-2 A 3.39% Due 5/17/2027	0.00	522.63	522.63
04/15/2024	Paydown	161571HT4	340,000.00	Chase Issuance Trust 23-A1 A 5.16% Due 9/15/2028	0.00	1,462.00	1,462.00

Cash Flow Report

As of October 31, 2023

Payment Date	Transaction Type	CUSIP	Quantity	Security Description	Principal Amount	Income	Total Amount
04/15/2024	Paydown	43815BAC4	165,000.00	Honda Auto Receivables Trust 2022-1 A3 1.88% Due 5/15/2026	8,531.16	192.54	8,723.70
04/15/2024	Paydown	47787CAC7	310,000.00	John Deere Owner Trust 2023-C A3 5.48% Due 5/15/2028	0.00	1,415.67	1,415.67
04/15/2024	Paydown	47788UAC6	23,274.22	John Deere Owner Trust 2021-A A3 0.36% Due 9/15/2025	1,939.20	4.08	1,943.28
04/15/2024	Paydown	47800AAC4	135,000.00	John Deere Owner Trust 2022-B A3 3.74% Due 2/16/2027	5,507.84	403.62	5,911.46
04/15/2024	Paydown	89238JAC9	52,741.54	Toyota Auto Receivables Trust 2021-D A3 0.71% Due 4/15/2026	3,291.46	21.49	3,312.95
04/16/2024	Interest	45950KCR9	160,000.00	International Finance Corp Note 1.375% Due 10/16/2024	0.00	1,100.00	1,100.00
04/16/2024	Paydown	36265WAD5	90,000.00	GM Financial Securitized Auto 2022-3 A3 3.64% Due 4/16/2027	4,865.51	273.00	5,138.51
04/16/2024	Paydown	362583AD8	115,000.00	GM Auto Receivable Trust 2023-2 A3 4.47% Due 2/16/2028	0.00	428.38	428.38
04/18/2024	Paydown	43815PAC3	105,000.00	Honda Auto Receivables 2022-2 A3 3.73% Due 7/20/2026	5,515.64	309.23	5,824.87
04/20/2024	Paydown	379929AD4	75,000.00	GM Financial Auto Leasing 2023-3 A3 5.38% Due 11/20/2026	0.00	336.25	336.25
04/21/2024	Paydown	43815JAC7	70,000.00	Honda Auto Receivables Owner 2023-1 A3 5.04% Due 4/21/2027	0.00	294.00	294.00
04/21/2024	Paydown	43815GAC3	68,190.98	Honda Auto Receivables Trust 2021-4 A3 0.88% Due 1/21/2026	4,259.45	34.40	4,293.85
04/25/2024	Paydown	3137H4BY5	315,000.00	FHLMC K746 A2 2.031% Due 9/25/2028	0.00	533.14	533.14
04/25/2024	Paydown	3137BNGT5	500,000.00	FHLMC K054 A2 2.745% Due 1/25/2026	0.00	1,143.75	1,143.75
04/25/2024	Paydown	05602RAD3	300,000.00	BMW Vehicle Owner Trust 2022-A A3 3.21% Due 8/25/2026	23,904.46	404.56	24,309.02
04/25/2024	Paydown	3137FEBQ2	500,000.00	FHLMC K072 A2 3.444% Due 12/25/2027	0.00	1,435.00	1,435.00
04/25/2024	Paydown	3137FETN0	465,000.00	FHLMC K073 A2 3.35% Due 1/25/2028	0.00	1,298.13	1,298.13

Payment Date	Transaction Type	CUSIP	Quantity	Security Description	Principal Amount	Income	Total Amount
04/25/2024	Paydown	3137FJEH8	155,000.00	FHLMC K081 A2 3.9% Due 8/25/2028	0.00	503.75	503.75
04/25/2024	Paydown	05593AAC3	40,000.00	BMW Vehicle Lease Trust 2023-1 A3 5.16% Due 11/25/2025	0.00	172.00	172.00
APR 2024					**1,171,875.31**	**30,001.92**	**1,201,877.23**
05/01/2024	Interest	74456QBU9	300,000.00	Public Service El & Gas Callable Note Cont 02/01/28 3.7% Due 5/1/2028	0.00	5,550.00	5,550.00
05/01/2024	Interest	78015K7C2	500,000.00	Royal Bank of Canada Note 2.25% Due 11/1/2024	0.00	5,625.00	5,625.00
05/01/2024	Paydown	3137FJZ93	240,000.00	FHLMC K084 A2 3.78% Due 10/25/2028	0.00	756.00	756.00
05/07/2024	Interest	3135G06G3	350,000.00	FNMA Note 0.5% Due 11/7/2025	0.00	875.00	875.00
05/08/2024	Interest	69371RR57	175,000.00	Paccar Financial Corp Note 0.9% Due 11/8/2024	0.00	787.50	787.50
05/10/2024	Interest	665859AW4	450,000.00	Northern Trust Company Callable Note Cont 4/10/2027 4% Due 5/10/2027	0.00	9,000.00	9,000.00
05/12/2024	Maturity	023135BW5	130,000.00	Amazon.com Inc Note 0.45% Due 5/12/2024	130,000.00	292.50	130,292.50
05/15/2024	Interest	912828U24	625,000.00	US Treasury Note 2% Due 11/15/2026	0.00	6,250.00	6,250.00
05/15/2024	Interest	91282CDH1	750,000.00	US Treasury Note 0.75% Due 11/15/2024	0.00	2,812.50	2,812.50
05/15/2024	Interest	9128283F5	800,000.00	US Treasury Note 2.25% Due 11/15/2027	0.00	9,000.00	9,000.00
05/15/2024	Interest	912828X88	350,000.00	US Treasury Note 2.375% Due 5/15/2027	0.00	4,156.25	4,156.25
05/15/2024	Interest	912828R36	250,000.00	US Treasury Note 1.625% Due 5/15/2026	0.00	2,031.25	2,031.25
05/15/2024	Maturity	912828WJ5	750,000.00	US Treasury Note 2.5% Due 5/15/2024	750,000.00	9,375.00	759,375.00

Cash Flow Report

As of October 31, 2023

Payment Date	Transaction Type	CUSIP	Quantity	Security Description	Principal Amount	Income	Total Amount
05/15/2024	Maturity	91324PEB4	500,000.00	United Health Group Inc Callable Note Cont 5/15/2022 0.55% Due 5/15/2024	500,000.00	1,375.00	501,375.00
05/15/2024	Paydown	02582JKD1	340,000.00	American Express Credit Trust 2023-3 A 5.23% Due 9/15/2028	0.00	1,481.83	1,481.83
05/15/2024	Paydown	43815BAC4	165,000.00	Honda Auto Receivables Trust 2022-1 A3 1.88% Due 5/15/2026	8,568.55	179.18	8,747.73
05/15/2024	Paydown	448979AD6	155,000.00	Hyundai Auto Receivables Trust 2023-A A3 4.58% Due 4/15/2027	0.00	591.58	591.58
05/15/2024	Paydown	47789QAC4	48,954.19	John Deere Owner Trust 2021-B A3 0.52% Due 3/16/2026	2,879.13	13.73	2,892.86
05/15/2024	Paydown	58770AAC7	105,000.00	Mercedes-Benz Auto Receivable 2023-1 A3 4.51% Due 11/15/2027	0.00	394.63	394.63
05/15/2024	Paydown	89238FAD5	115,000.00	Toyota Auto Receivables OT 2022-B A3 2.93% Due 9/15/2026	5,432.26	201.76	5,634.02
05/15/2024	Paydown	89236XAC0	3,606.26	Toyota Auto Receivables 2020-D A3 0.35% Due 1/15/2025	241.49	0.62	242.11
05/15/2024	Paydown	47787CAC7	310,000.00	John Deere Owner Trust 2023-C A3 5.48% Due 5/15/2028	0.00	1,415.67	1,415.67
05/15/2024	Paydown	47787JAC2	127,895.34	John Deere Owner Trust 2022-A A3 2.32% Due 9/16/2026	5,524.93	183.46	5,708.39
05/15/2024	Paydown	47800AAC4	135,000.00	John Deere Owner Trust 2022-B A3 3.74% Due 2/16/2027	5,518.84	386.45	5,905.29
05/15/2024	Paydown	47800BAC2	220,000.00	John Deere Owner Trust 2022-C A3 5.09% Due 6/15/2027	0.00	933.17	933.17
05/15/2024	Paydown	89238JAC9	52,741.54	Toyota Auto Receivables Trust 2021-D A3 0.71% Due 4/15/2026	3,293.41	19.54	3,312.95
05/15/2024	Paydown	02582JJT8	185,000.00	American Express Credit Trust 2022-2 A 3.39% Due 5/17/2027	0.00	522.63	522.63
05/15/2024	Paydown	02582JJZ4	125,000.00	American Express Credit Trust 2023-1 A 4.87% Due 5/15/2028	0.00	507.29	507.29
05/15/2024	Paydown	161571HT4	340,000.00	Chase Issuance Trust 23-A1 A 5.16% Due 9/15/2028	0.00	1,462.00	1,462.00

Cash Flow Report

As of October 31, 2023

Payment Date	Transaction Type	CUSIP	Quantity	Security Description	Principal Amount	Income	Total Amount
05/15/2024	Paydown	47788UAC6	23,274.22	John Deere Owner Trust 2021-A A3 0.36% Due 9/15/2025	1,939.84	3.49	1,943.33
05/16/2024	Paydown	362583AD8	115,000.00	GM Auto Receivable Trust 2023-2 A3 4.47% Due 2/16/2028	0.00	428.38	428.38
05/16/2024	Paydown	36265WAD5	90,000.00	GM Financial Securitized Auto 2022-3 A3 3.64% Due 4/16/2027	4,881.07	258.24	5,139.31
05/17/2024	Interest	58933YBH7	90,000.00	Merck & Co Callable Note Cont 4/17/2028 4.05% Due 5/17/2028	0.00	1,822.50	1,822.50
05/17/2024	Maturity	14913R2L0	500,000.00	Caterpillar Financial Service Note 0.45% Due 5/17/2024	500,000.00	1,125.00	501,125.00
05/18/2024	Paydown	43815PAC3	105,000.00	Honda Auto Receivables 2022-2 A3 3.73% Due 7/20/2026	5,516.97	292.09	5,809.06
05/20/2024	Paydown	379929AD4	75,000.00	GM Financial Auto Leasing 2023-3 A3 5.38% Due 11/20/2026	0.00	336.25	336.25
05/21/2024	Paydown	43815GAC3	68,190.98	Honda Auto Receivables Trust 2021-4 A3 0.88% Due 1/21/2026	4,260.44	31.28	4,291.72
05/21/2024	Paydown	43815JAC7	70,000.00	Honda Auto Receivables Owner 2023-1 A3 5.04% Due 4/21/2027	0.00	294.00	294.00
05/25/2024	Paydown	05602RAD3	300,000.00	BMW Vehicle Owner Trust 2022-A A3 3.21% Due 8/25/2026	21,946.34	340.62	22,286.96
05/25/2024	Paydown	3137FJEH8	155,000.00	FHLMC K081 A2 3.9% Due 8/25/2028	0.00	503.75	503.75
05/25/2024	Paydown	3137BNGT5	500,000.00	FHLMC K054 A2 2.745% Due 1/25/2026	0.00	1,143.75	1,143.75
05/25/2024	Paydown	3137FEBQ2	500,000.00	FHLMC K072 A2 3.444% Due 12/25/2027	0.00	1,435.00	1,435.00
05/25/2024	Paydown	3137FETN0	465,000.00	FHLMC K073 A2 3.35% Due 1/25/2028	0.00	1,298.13	1,298.13
05/25/2024	Paydown	3137H4BY5	315,000.00	FHLMC K746 A2 2.031% Due 9/25/2028	0.00	533.14	533.14
05/25/2024	Paydown	05593AAC3	40,000.00	BMW Vehicle Lease Trust 2023-1 A3 5.16% Due 11/25/2025	0.00	172.00	172.00
05/31/2024	Interest	912828ZT0	365,000.00	US Treasury Note 0.25% Due 5/31/2025	0.00	456.25	456.25

Payment Date	Transaction Type	CUSIP	Quantity	Security Description	Principal Amount	Income	Total Amount
05/31/2024	Interest	91282CAZ4	750,000.00	US Treasury Note 0.375% Due 11/30/2025	0.00	1,406.25	1,406.25
MAY 2024					**1,950,003.27**	**78,059.66**	**2,028,062.93**
06/01/2024	Interest	023135CN4	395,000.00	Amazon.com Inc Note 4.6% Due 12/1/2025	0.00	9,085.00	9,085.00
06/01/2024	Paydown	3137FJZ93	240,000.00	FHLMC K084 A2 3.78% Due 10/25/2028	0.00	756.00	756.00
06/14/2024	Maturity	3130A1XJ2	155,000.00	FHLB Note 2.875% Due 6/14/2024	155,000.00	2,228.13	157,228.13
06/15/2024	Interest	63743HFE7	95,000.00	National Rural Utilities Note 3.45% Due 6/15/2025	0.00	1,638.75	1,638.75
06/15/2024	Maturity	91282CCG4	400,000.00	US Treasury Note 0.25% Due 6/15/2024	400,000.00	500.00	400,500.00
06/15/2024	Paydown	161571HT4	340,000.00	Chase Issuance Trust 23-A1 A 5.16% Due 9/15/2028	0.00	1,462.00	1,462.00
06/15/2024	Paydown	43815BAC4	165,000.00	Honda Auto Receivables Trust 2022-1 A3 1.88% Due 5/15/2026	8,606.11	165.75	8,771.86
06/15/2024	Paydown	47789QAC4	48,954.19	John Deere Owner Trust 2021-B A3 0.52% Due 3/16/2026	2,879.40	12.48	2,891.88
06/15/2024	Paydown	58770AAC7	105,000.00	Mercedes-Benz Auto Receivable 2023-1 A3 4.51% Due 11/15/2027	0.00	394.63	394.63
06/15/2024	Paydown	89236XAC0	3,606.26	Toyota Auto Receivables 2020-D A3 0.35% Due 1/15/2025	240.51	0.55	241.06
06/15/2024	Paydown	89238FAD5	115,000.00	Toyota Auto Receivables OT 2022-B A3 2.93% Due 9/15/2026	5,443.11	188.50	5,631.61
06/15/2024	Paydown	02582JJT8	185,000.00	American Express Credit Trust 2022-2 A 3.39% Due 5/17/2027	0.00	522.63	522.63
06/15/2024	Paydown	47787CAC7	310,000.00	John Deere Owner Trust 2023-C A3 5.48% Due 5/15/2028	0.00	1,415.67	1,415.67
06/15/2024	Paydown	47788UAC6	23,274.22	John Deere Owner Trust 2021-A A3 0.36% Due 9/15/2025	1,940.47	2.91	1,943.38
06/15/2024	Paydown	47800AAC4	135,000.00	John Deere Owner Trust 2022-B A3 3.74% Due 2/16/2027	5,529.87	369.25	5,899.12

Cash Flow Report

As of October 31, 2023

Payment Date	Transaction Type	CUSIP	Quantity	Security Description	Principal Amount	Income	Total Amount
06/15/2024	Paydown	89238JAC9	52,741.54	Toyota Auto Receivables Trust 2021-D A3 0.71% Due 4/15/2026	3,295.36	17.59	3,312.95
06/15/2024	Paydown	02582JKD1	340,000.00	American Express Credit Trust 2023-3 A 5.23% Due 9/15/2028	0.00	1,481.83	1,481.83
06/15/2024	Paydown	448979AD6	155,000.00	Hyundai Auto Receivables Trust 2023-A A3 4.58% Due 4/15/2027	0.00	591.58	591.58
06/15/2024	Paydown	47800BAC2	220,000.00	John Deere Owner Trust 2022-C A3 5.09% Due 6/15/2027	0.00	933.17	933.17
06/15/2024	Paydown	02582JJZ4	125,000.00	American Express Credit Trust 2023-1 A 4.87% Due 5/15/2028	0.00	507.29	507.29
06/15/2024	Paydown	47787JAC2	127,895.34	John Deere Owner Trust 2022-A A3 2.32% Due 9/16/2026	5,532.01	172.78	5,704.79
06/16/2024	Paydown	362583AD8	115,000.00	GM Auto Receivable Trust 2023-2 A3 4.47% Due 2/16/2028	0.00	428.38	428.38
06/16/2024	Paydown	36265WAD5	90,000.00	GM Financial Securitized Auto 2022-3 A3 3.64% Due 4/16/2027	4,896.67	243.44	5,140.11
06/18/2024	Maturity	89236TJH9	300,000.00	Toyota Motor Credit Corp Note 0.5% Due 6/18/2024	300,000.00	750.00	300,750.00
06/18/2024	Paydown	43815PAC3	105,000.00	Honda Auto Receivables 2022-2 A3 3.73% Due 7/20/2026	5,518.31	274.94	5,793.25
06/20/2024	Paydown	379929AD4	75,000.00	GM Financial Auto Leasing 2023-3 A3 5.38% Due 11/20/2026	0.00	336.25	336.25
06/21/2024	Paydown	43815GAC3	68,190.98	Honda Auto Receivables Trust 2021-4 A3 0.88% Due 1/21/2026	4,261.44	28.15	4,289.59
06/21/2024	Paydown	43815JAC7	70,000.00	Honda Auto Receivables Owner 2023-1 A3 5.04% Due 4/21/2027	0.00	294.00	294.00
06/25/2024	Paydown	3137FEBQ2	500,000.00	FHLMC K072 A2 3.444% Due 12/25/2027	0.00	1,435.00	1,435.00
06/25/2024	Paydown	3137FETN0	465,000.00	FHLMC K073 A2 3.35% Due 1/25/2028	0.00	1,298.13	1,298.13
06/25/2024	Paydown	3137BNGT5	500,000.00	FHLMC K054 A2 2.745% Due 1/25/2026	0.00	1,143.75	1,143.75
06/25/2024	Paydown	3137H4BY5	315,000.00	FHLMC K746 A2 2.031% Due 9/25/2028	0.00	533.14	533.14

Cash Flow Report

As of October 31, 2023

Payment Date	Transaction Type	CUSIP	Quantity	Security Description	Principal Amount	Income	Total Amount
06/25/2024	Paydown	05593AAC3	40,000.00	BMW Vehicle Lease Trust 2023-1 A3 5.16% Due 11/25/2025	3,931.47	172.00	4,103.47
06/25/2024	Paydown	05602RAD3	300,000.00	BMW Vehicle Owner Trust 2022-A A3 3.21% Due 8/25/2026	19,984.46	281.91	20,266.37
06/25/2024	Paydown	3137FJEH8	155,000.00	FHLMC K081 A2 3.9% Due 8/25/2028	0.00	503.75	503.75
06/30/2024	Interest	91282CGC9	500,000.00	US Treasury Note 3.875% Due 12/31/2027	0.00	9,687.50	9,687.50
JUN 2024					**927,059.19**	**39,856.83**	**966,916.02**
07/01/2024	Paydown	3137FJZ93	240,000.00	FHLMC K084 A2 3.78% Due 10/25/2028	0.00	756.00	756.00
07/06/2024	Interest	3133ENKS8	750,000.00	FFCB Note 1.125% Due 1/6/2025	0.00	4,218.76	4,218.76
07/15/2024	Interest	91282CEY3	550,000.00	US Treasury Note 3% Due 7/15/2025	0.00	8,250.00	8,250.00
07/15/2024	Maturity	79466LAG9	35,000.00	Salesforce.com Inc Callable Note Cont 7/15/2022 0.625% Due 7/15/2024	35,000.00	109.38	35,109.38
07/15/2024	Paydown	89236XAC0	3,606.26	Toyota Auto Receivables 2020-D A3 0.35% Due 1/15/2025	239.53	0.48	240.01
07/15/2024	Paydown	161571HT4	340,000.00	Chase Issuance Trust 23-A1 A 5.16% Due 9/15/2028	0.00	1,462.00	1,462.00
07/15/2024	Paydown	02582JJT8	185,000.00	American Express Credit Trust 2022-2 A 3.39% Due 5/17/2027	0.00	522.63	522.63
07/15/2024	Paydown	47788UAC6	23,274.22	John Deere Owner Trust 2021-A A3 0.36% Due 9/15/2025	1,941.09	2.33	1,943.42
07/15/2024	Paydown	02582JKD1	340,000.00	American Express Credit Trust 2023-3 A 5.23% Due 9/15/2028	0.00	1,481.83	1,481.83
07/15/2024	Paydown	43815BAC4	165,000.00	Honda Auto Receivables Trust 2022-1 A3 1.88% Due 5/15/2026	8,643.83	152.27	8,796.10
07/15/2024	Paydown	448979AD6	155,000.00	Hyundai Auto Receivables Trust 2023-A A3 4.58% Due 4/15/2027	0.00	591.58	591.58
07/15/2024	Paydown	47787CAC7	310,000.00	John Deere Owner Trust 2023-C A3 5.48% Due 5/15/2028	0.00	1,415.67	1,415.67

Cash Flow Report

As of October 31, 2023

Payment Date	Transaction Type	CUSIP	Quantity	Security Description	Principal Amount	Income	Total Amount
07/15/2024	Paydown	47800AAC4	135,000.00	John Deere Owner Trust 2022-B A3 3.74% Due 2/16/2027	5,540.91	352.02	5,892.93
07/15/2024	Paydown	47800BAC2	220,000.00	John Deere Owner Trust 2022-C A3 5.09% Due 6/15/2027	8,945.50	933.17	9,878.67
07/15/2024	Paydown	89238JAC9	52,741.54	Toyota Auto Receivables Trust 2021-D A3 0.71% Due 4/15/2026	3,297.31	15.64	3,312.95
07/15/2024	Paydown	02582JJZ4	125,000.00	American Express Credit Trust 2023-1 A 4.87% Due 5/15/2028	0.00	507.29	507.29
07/15/2024	Paydown	47787JAC2	127,895.34	John Deere Owner Trust 2022-A A3 2.32% Due 9/16/2026	5,539.11	162.09	5,701.20
07/15/2024	Paydown	47789QAC4	48,954.19	John Deere Owner Trust 2021-B A3 0.52% Due 3/16/2026	2,879.66	11.23	2,890.89
07/15/2024	Paydown	58770AAC7	105,000.00	Mercedes-Benz Auto Receivable 2023-1 A3 4.51% Due 11/15/2027	0.00	394.63	394.63
07/15/2024	Paydown	89238FAD5	115,000.00	Toyota Auto Receivables OT 2022-B A3 2.93% Due 9/15/2026	5,453.98	175.21	5,629.19
07/16/2024	Paydown	36265WAD5	90,000.00	GM Financial Securitized Auto 2022-3 A3 3.64% Due 4/16/2027	4,912.33	228.58	5,140.91
07/16/2024	Paydown	362583AD8	115,000.00	GM Auto Receivable Trust 2023-2 A3 4.47% Due 2/16/2028	0.00	428.38	428.38
07/17/2024	Interest	61747YET8	175,000.00	Morgan Stanley Callable Note Cont 7/17/2025 4.679% Due 7/17/2026	0.00	4,094.13	4,094.13
07/18/2024	Paydown	43815PAC3	105,000.00	Honda Auto Receivables 2022-2 A3 3.73% Due 7/20/2026	5,519.64	257.79	5,777.43
07/20/2024	Paydown	379929AD4	75,000.00	GM Financial Auto Leasing 2023-3 A3 5.38% Due 11/20/2026	0.00	336.25	336.25
07/21/2024	Paydown	43815GAC3	68,190.98	Honda Auto Receivables Trust 2021-4 A3 0.88% Due 1/21/2026	4,262.43	25.03	4,287.46
07/21/2024	Paydown	43815JAC7	70,000.00	Honda Auto Receivables Owner 2023-1 A3 5.04% Due 4/21/2027	0.00	294.00	294.00
07/25/2024	Paydown	05602RAD3	300,000.00	BMW Vehicle Owner Trust 2022-A A3 3.21% Due 8/25/2026	18,018.80	228.45	18,247.25
07/25/2024	Paydown	3137FEBQ2	500,000.00	FHLMC K072 A2 3.444% Due 12/25/2027	0.00	1,435.00	1,435.00

Cash Flow Report

As of October 31, 2023

Payment Date	Transaction Type	CUSIP	Quantity	Security Description	Principal Amount	Income	Total Amount
07/25/2024	Paydown	3137FETN0	465,000.00	FHLMC K073 A2 3.35% Due 1/25/2028	0.00	1,298.13	1,298.13
07/25/2024	Paydown	3137H4BY5	315,000.00	FHLMC K746 A2 2.031% Due 9/25/2028	0.00	533.14	533.14
07/25/2024	Paydown	05593AAC3	40,000.00	BMW Vehicle Lease Trust 2023-1 A3 5.16% Due 11/25/2025	3,946.55	155.09	4,101.64
07/25/2024	Paydown	3137BNGT5	500,000.00	FHLMC K054 A2 2.745% Due 1/25/2026	0.00	1,143.75	1,143.75
07/25/2024	Paydown	3137FJEH8	155,000.00	FHLMC K081 A2 3.9% Due 8/25/2028	0.00	503.75	503.75
07/31/2024	Interest	912828Z52	750,000.00	US Treasury Note 1.375% Due 1/31/2025	0.00	5,156.25	5,156.25
07/31/2024	Maturity	912828Y87	300,000.00	US Treasury Note 1.75% Due 7/31/2024	300,000.00	2,625.00	302,625.00
JUL 2024					**414,140.67**	**40,256.93**	**454,397.60**
08/01/2024	Interest	459058KW2	250,000.00	Intl. Bank Recon & Development Note 4.625% Due 8/1/2028	0.00	5,781.25	5,781.25
08/01/2024	Paydown	3137FJZ93	240,000.00	FHLMC K084 A2 3.78% Due 10/25/2028	0.00	756.00	756.00
08/06/2024	Interest	857477BR3	90,000.00	State Street Bank Callable Note Cont 2/6/2025 1.746% Due 2/6/2026	0.00	785.70	785.70
08/09/2024	Maturity	69371RR40	80,000.00	Paccar Financial Corp Note 0.5% Due 8/9/2024	80,000.00	200.00	80,200.00
08/14/2024	Interest	3133ENPG9	415,000.00	FFCB Note 1.75% Due 2/14/2025	0.00	3,631.25	3,631.25
08/15/2024	Interest	438516CJ3	400,000.00	Honeywell Intl Callable Note Cont 01/15/2028 4.95% Due 2/15/2028	0.00	9,900.00	9,900.00
08/15/2024	Maturity	91282CCT6	400,000.00	US Treasury Note 0.375% Due 8/15/2024	400,000.00	750.00	400,750.00
08/15/2024	Paydown	47787CAC7	310,000.00	John Deere Owner Trust 2023-C A3 5.48% Due 5/15/2028	0.00	1,415.67	1,415.67
08/15/2024	Paydown	47788UAC6	23,274.22	John Deere Owner Trust 2021-A A3 0.36% Due 9/15/2025	1,941.72	1.75	1,943.47

Cash Flow Report

As of October 31, 2023

Payment Date	Transaction Type	CUSIP	Quantity	Security Description	Principal Amount	Income	Total Amount
08/15/2024	Paydown	47800AAC4	135,000.00	John Deere Owner Trust 2022-B A3 3.74% Due 2/16/2027	5,551.98	334.75	5,886.73
08/15/2024	Paydown	02582JKD1	340,000.00	American Express Credit Trust 2023-3 A 5.23% Due 9/15/2028	0.00	1,481.83	1,481.83
08/15/2024	Paydown	448979AD6	155,000.00	Hyundai Auto Receivables Trust 2023-A A3 4.58% Due 4/15/2027	0.00	591.58	591.58
08/15/2024	Paydown	89238JAC9	52,741.54	Toyota Auto Receivables Trust 2021-D A3 0.71% Due 4/15/2026	3,299.26	13.69	3,312.95
08/15/2024	Paydown	161571HT4	340,000.00	Chase Issuance Trust 23-A1 A 5.16% Due 9/15/2028	0.00	1,462.00	1,462.00
08/15/2024	Paydown	43815BAC4	165,000.00	Honda Auto Receivables Trust 2022-1 A3 1.88% Due 5/15/2026	8,681.72	138.73	8,820.45
08/15/2024	Paydown	02582JJT8	185,000.00	American Express Credit Trust 2022-2 A 3.39% Due 5/17/2027	0.00	522.63	522.63
08/15/2024	Paydown	47789QAC4	48,954.19	John Deere Owner Trust 2021-B A3 0.52% Due 3/16/2026	2,879.92	9.99	2,889.91
08/15/2024	Paydown	58770AAC7	105,000.00	Mercedes-Benz Auto Receivable 2023-1 A3 4.51% Due 11/15/2027	0.00	394.63	394.63
08/15/2024	Paydown	89238FAD5	115,000.00	Toyota Auto Receivables OT 2022-B A3 2.93% Due 9/15/2026	5,464.88	161.89	5,626.77
08/15/2024	Paydown	02582JJZ4	125,000.00	American Express Credit Trust 2023-1 A 4.87% Due 5/15/2028	0.00	507.29	507.29
08/15/2024	Paydown	47787JAC2	127,895.34	John Deere Owner Trust 2022-A A3 2.32% Due 9/16/2026	5,546.22	151.38	5,697.60
08/15/2024	Paydown	47800BAC2	220,000.00	John Deere Owner Trust 2022-C A3 5.09% Due 6/15/2027	8,964.44	895.22	9,859.66
08/15/2024	Paydown	89236XAC0	3,606.26	Toyota Auto Receivables 2020-D A3 0.35% Due 1/15/2025	238.53	0.41	238.94
08/16/2024	Paydown	362583AD8	115,000.00	GM Auto Receivable Trust 2023-2 A3 4.47% Due 2/16/2028	0.00	428.38	428.38
08/16/2024	Paydown	36265WAD5	90,000.00	GM Financial Securitized Auto 2022-3 A3 3.64% Due 4/16/2027	4,928.03	213.68	5,141.71
08/18/2024	Interest	06428CAA2	300,000.00	Bank Of America NA Callable Note cont 7/17/2026 5.526% Due 8/18/2026	0.00	8,289.00	8,289.00

Cash Flow Report

As of October 31, 2023

Payment Date	Transaction Type	CUSIP	Quantity	Security Description	Principal Amount	Income	Total Amount
08/18/2024	Paydown	43815PAC3	105,000.00	Honda Auto Receivables 2022-2 A3 3.73% Due 7/20/2026	5,520.97	240.63	5,761.60
08/20/2024	Paydown	379929AD4	75,000.00	GM Financial Auto Leasing 2023-3 A3 5.38% Due 11/20/2026	0.00	336.25	336.25
08/21/2024	Paydown	43815JAC7	70,000.00	Honda Auto Receivables Owner 2023-1 A3 5.04% Due 4/21/2027	0.00	294.00	294.00
08/21/2024	Paydown	43815GAC3	68,190.98	Honda Auto Receivables Trust 2021-4 A3 0.88% Due 1/21/2026	4,263.43	21.90	4,285.33
08/23/2024	Interest	037833BY5	400,000.00	Apple Inc Callable Note Cont 11/23/2025 3.25% Due 2/23/2026	0.00	6,500.00	6,500.00
08/25/2024	Paydown	3137H4BY5	315,000.00	FHLMC K746 A2 2.031% Due 9/25/2028	0.00	533.14	533.14
08/25/2024	Paydown	05593AAC3	40,000.00	BMW Vehicle Lease Trust 2023-1 A3 5.16% Due 11/25/2025	3,961.68	138.12	4,099.80
08/25/2024	Paydown	3137BNGT5	500,000.00	FHLMC K054 A2 2.745% Due 1/25/2026	0.00	1,143.75	1,143.75
08/25/2024	Paydown	05602RAD3	300,000.00	BMW Vehicle Owner Trust 2022-A A3 3.21% Due 8/25/2026	16,049.34	180.25	16,229.59
08/25/2024	Paydown	3137FEBQ2	500,000.00	FHLMC K072 A2 3.444% Due 12/25/2027	0.00	1,435.00	1,435.00
08/25/2024	Paydown	3137FETN0	465,000.00	FHLMC K073 A2 3.35% Due 1/25/2028	0.00	1,298.13	1,298.13
08/25/2024	Paydown	3137FJEH8	155,000.00	FHLMC K081 A2 3.9% Due 8/25/2028	0.00	503.75	503.75
08/31/2024	Interest	9128284Z0	750,000.00	US Treasury Note 2.75% Due 8/31/2025	0.00	10,312.50	10,312.50
AUG 2024					**557,292.12**	**61,756.12**	**619,048.24**
09/01/2024	Paydown	3137FJZ93	240,000.00	FHLMC K084 A2 3.78% Due 10/25/2028	0.00	756.00	756.00
09/07/2024	Interest	24422EWB1	130,000.00	John Deere Capital Corp Note 2.125% Due 3/7/2025	0.00	1,381.25	1,381.25
09/09/2024	Interest	57636QAW4	290,000.00	MasterCard Inc Callable Note Cont 2/9/28 4.875% Due 3/9/2028	0.00	7,068.75	7,068.75

Cash Flow Report

As of October 31, 2023

Payment Date	Transaction Type	CUSIP	Quantity	Security Description	Principal Amount	Income	Total Amount
09/09/2024	Interest	931142EW9	80,000.00	Wal-Mart Stores Note 3.9% Due 9/9/2025	0.00	1,560.00	1,560.00
09/09/2024	Interest	931142EX7	225,000.00	Wal-Mart Stores Callable Note Cont 09/09/2027 3.95% Due 9/9/2027	0.00	4,443.75	4,443.75
09/10/2024	Interest	3130ATS57	700,000.00	FHLB Note 4.5% Due 3/10/2028	0.00	15,750.00	15,750.00
09/15/2024	Interest	437076CR1	110,000.00	Home Depot Callable Note Cont 8/15/2025 4% Due 9/15/2025	0.00	2,200.00	2,200.00
09/15/2024	Paydown	89236XAC0	3,606.26	Toyota Auto Receivables 2020-D A3 0.35% Due 1/15/2025	237.53	0.34	237.87
09/15/2024	Paydown	02582JJT8	185,000.00	American Express Credit Trust 2022-2 A 3.39% Due 5/17/2027	0.00	522.63	522.63
09/15/2024	Paydown	161571HT4	340,000.00	Chase Issuance Trust 23-A1 A 5.16% Due 9/15/2028	0.00	1,462.00	1,462.00
09/15/2024	Paydown	47788UAC6	23,274.22	John Deere Owner Trust 2021-A A3 0.36% Due 9/15/2025	1,942.35	1.17	1,943.52
09/15/2024	Paydown	02582JKD1	340,000.00	American Express Credit Trust 2023-3 A 5.23% Due 9/15/2028	0.00	1,481.83	1,481.83
09/15/2024	Paydown	43815BAC4	165,000.00	Honda Auto Receivables Trust 2022-1 A3 1.88% Due 5/15/2026	8,719.77	125.13	8,844.90
09/15/2024	Paydown	448979AD6	155,000.00	Hyundai Auto Receivables Trust 2023-A A3 4.58% Due 4/15/2027	8,835.79	591.58	9,427.37
09/15/2024	Paydown	47789QAC4	48,954.19	John Deere Owner Trust 2021-B A3 0.52% Due 3/16/2026	2,880.18	8.74	2,888.92
09/15/2024	Paydown	58770AAC7	105,000.00	Mercedes-Benz Auto Receivable 2023-1 A3 4.51% Due 11/15/2027	4,375.62	394.63	4,770.25
09/15/2024	Paydown	89238FAD5	115,000.00	Toyota Auto Receivables OT 2022-B A3 2.93% Due 9/15/2026	5,475.79	148.55	5,624.34
09/15/2024	Paydown	02582JJZ4	125,000.00	American Express Credit Trust 2023-1 A 4.87% Due 5/15/2028	0.00	507.29	507.29
09/15/2024	Paydown	47787CAC7	310,000.00	John Deere Owner Trust 2023-C A3 5.48% Due 5/15/2028	0.00	1,415.67	1,415.67
09/15/2024	Paydown	47787JAC2	127,895.34	John Deere Owner Trust 2022-A A3 2.32% Due 9/16/2026	5,553.34	140.65	5,693.99

Cash Flow Report

As of October 31, 2023

Payment Date	Transaction Type	CUSIP	Quantity	Security Description	Principal Amount	Income	Total Amount
09/15/2024	Paydown	47800AAC4	135,000.00	John Deere Owner Trust 2022-B A3 3.74% Due 2/16/2027	5,563.07	317.44	5,880.51
09/15/2024	Paydown	47800BAC2	220,000.00	John Deere Owner Trust 2022-C A3 5.09% Due 6/15/2027	8,983.41	857.20	9,840.61
09/15/2024	Paydown	89238JAC9	52,741.54	Toyota Auto Receivables Trust 2021-D A3 0.71% Due 4/15/2026	3,301.21	11.74	3,312.95
09/16/2024	Paydown	36265WAD5	90,000.00	GM Financial Securitized Auto 2022-3 A3 3.64% Due 4/16/2027	4,943.78	198.73	5,142.51
09/16/2024	Paydown	362583AD8	115,000.00	GM Auto Receivable Trust 2023-2 A3 4.47% Due 2/16/2028	0.00	428.38	428.38
09/17/2024	Interest	931142ER0	40,000.00	Wal-Mart Stores Callable Note Cont 08/17/2026 1.05% Due 9/17/2026	0.00	210.00	210.00
09/18/2024	Paydown	43815PAC3	105,000.00	Honda Auto Receivables 2022-2 A3 3.73% Due 7/20/2026	5,522.31	223.47	5,745.78
09/20/2024	Paydown	379929AD4	75,000.00	GM Financial Auto Leasing 2023-3 A3 5.38% Due 11/20/2026	0.00	336.25	336.25
09/21/2024	Paydown	43815JAC7	70,000.00	Honda Auto Receivables Owner 2023-1 A3 5.04% Due 4/21/2027	0.00	294.00	294.00
09/21/2024	Paydown	43815GAC3	68,190.98	Honda Auto Receivables Trust 2021-4 A3 0.88% Due 1/21/2026	4,264.42	18.77	4,283.19
09/23/2024	Maturity	4581X0DZ8	260,000.00	Inter-American Dev Bank Note 0.5% Due 9/23/2024	260,000.00	650.00	260,650.00
09/25/2024	Paydown	05593AAC3	40,000.00	BMW Vehicle Lease Trust 2023-1 A3 5.16% Due 11/25/2025	3,976.86	121.09	4,097.95
09/25/2024	Paydown	05602RAD3	300,000.00	BMW Vehicle Owner Trust 2022-A A3 3.21% Due 8/25/2026	14,076.08	137.32	14,213.40
09/25/2024	Paydown	3137BNGT5	500,000.00	FHLMC K054 A2 2.745% Due 1/25/2026	0.00	1,143.75	1,143.75
09/25/2024	Paydown	3137FEBQ2	500,000.00	FHLMC K072 A2 3.444% Due 12/25/2027	0.00	1,435.00	1,435.00
09/25/2024	Paydown	3137FETN0	465,000.00	FHLMC K073 A2 3.35% Due 1/25/2028	0.00	1,298.13	1,298.13
09/25/2024	Paydown	3137FJEH8	155,000.00	FHLMC K081 A2 3.9% Due 8/25/2028	0.00	503.75	503.75

Cash Flow Report

As of October 31, 2023

Payment Date	Transaction Type	CUSIP	Quantity	Security Description	Principal Amount	Income	Total Amount
09/25/2024	Paydown	3137H4BY5	315,000.00	FHLMC K746 A2 2.031% Due 9/25/2028	0.00	533.14	533.14
09/30/2024	Interest	9128286L9	750,000.00	US Treasury Note 2.25% Due 3/31/2026	0.00	8,437.50	8,437.50
09/30/2024	Interest	91282CFM8	570,000.00	US Treasury Note 4.125% Due 9/30/2027	0.00	11,756.25	11,756.25
09/30/2024	Interest	912828YG9	300,000.00	US Treasury Note 1.625% Due 9/30/2026	0.00	2,437.50	2,437.50
09/30/2024	Interest	912828ZF0	350,000.00	US Treasury Note 0.5% Due 3/31/2025	0.00	875.00	875.00
09/30/2024	Interest	91282CEF4	750,000.00	US Treasury Note 2.5% Due 3/31/2027	0.00	9,375.00	9,375.00
SEP 2024					**348,651.51**	**81,559.37**	**430,210.88**
10/01/2024	Paydown	3137FJZ93	240,000.00	FHLMC K084 A2 3.78% Due 10/25/2028	0.00	756.00	756.00
10/15/2024	Interest	91282CFP1	550,000.00	US Treasury Note 4.25% Due 10/15/2025	0.00	11,687.50	11,687.50
10/15/2024	Paydown	02582JKD1	340,000.00	American Express Credit Trust 2023-3 A 5.23% Due 9/15/2028	0.00	1,481.83	1,481.83
10/15/2024	Paydown	448979AD6	155,000.00	Hyundai Auto Receivables Trust 2023-A A3 4.58% Due 4/15/2027	8,870.33	557.86	9,428.19
10/15/2024	Paydown	47800BAC2	220,000.00	John Deere Owner Trust 2022-C A3 5.09% Due 6/15/2027	9,002.43	819.09	9,821.52
10/15/2024	Paydown	89236XAC0	3,606.26	Toyota Auto Receivables 2020-D A3 0.35% Due 1/15/2025	236.51	0.27	236.78
10/15/2024	Paydown	02582JJT8	185,000.00	American Express Credit Trust 2022-2 A 3.39% Due 5/17/2027	0.00	522.63	522.63
10/15/2024	Paydown	02582JJZ4	125,000.00	American Express Credit Trust 2023-1 A 4.87% Due 5/15/2028	0.00	507.29	507.29
10/15/2024	Paydown	47787JAC2	127,895.34	John Deere Owner Trust 2022-A A3 2.32% Due 9/16/2026	5,560.46	129.92	5,690.38
10/15/2024	Paydown	161571HT4	340,000.00	Chase Issuance Trust 23-A1 A 5.16% Due 9/15/2028	0.00	1,462.00	1,462.00

Cash Flow Report

As of October 31, 2023

Payment Date	Transaction Type	CUSIP	Quantity	Security Description	Principal Amount	Income	Total Amount
10/15/2024	Paydown	43815BAC4	165,000.00	Honda Auto Receivables Trust 2022-1 A3 1.88% Due 5/15/2026	8,757.99	111.47	8,869.46
10/15/2024	Paydown	47789QAC4	48,954.19	John Deere Owner Trust 2021-B A3 0.52% Due 3/16/2026	2,880.45	7.49	2,887.94
10/15/2024	Paydown	58770AAC7	105,000.00	Mercedes-Benz Auto Receivable 2023-1 A3 4.51% Due 11/15/2027	4,392.40	378.18	4,770.58
10/15/2024	Paydown	89238FAD5	115,000.00	Toyota Auto Receivables OT 2022-B A3 2.93% Due 9/15/2026	5,486.73	135.18	5,621.91
10/15/2024	Paydown	47787CAC7	310,000.00	John Deere Owner Trust 2023-C A3 5.48% Due 5/15/2028	0.00	1,415.67	1,415.67
10/15/2024	Paydown	47788UAC6	23,274.22	John Deere Owner Trust 2021-A A3 0.36% Due 9/15/2025	1,942.99	0.58	1,943.57
10/15/2024	Paydown	47800AAC4	135,000.00	John Deere Owner Trust 2022-B A3 3.74% Due 2/16/2027	5,574.18	300.11	5,874.29
10/15/2024	Paydown	89238JAC9	52,741.54	Toyota Auto Receivables Trust 2021-D A3 0.71% Due 4/15/2026	3,303.17	9.78	3,312.95
10/16/2024	Maturity	45950KCR9	160,000.00	International Finance Corp Note 1.375% Due 10/16/2024	160,000.00	1,100.00	161,100.00
10/16/2024	Paydown	36265WAD5	90,000.00	GM Financial Securitized Auto 2022-3 A3 3.64% Due 4/16/2027	4,959.58	183.74	5,143.32
10/16/2024	Paydown	362583AD8	115,000.00	GM Auto Receivable Trust 2023-2 A3 4.47% Due 2/16/2028	0.00	428.38	428.38
10/18/2024	Paydown	43815PAC3	105,000.00	Honda Auto Receivables 2022-2 A3 3.73% Due 7/20/2026	5,523.64	206.31	5,729.95
10/20/2024	Paydown	379929AD4	75,000.00	GM Financial Auto Leasing 2023-3 A3 5.38% Due 11/20/2026	0.00	336.25	336.25
10/21/2024	Paydown	43815GAC3	68,190.98	Honda Auto Receivables Trust 2021-4 A3 0.88% Due 1/21/2026	4,265.41	15.65	4,281.06
10/21/2024	Paydown	43815JAC7	70,000.00	Honda Auto Receivables Owner 2023-1 A3 5.04% Due 4/21/2027	3,558.70	294.00	3,852.70
10/25/2024	Paydown	05593AAC3	40,000.00	BMW Vehicle Lease Trust 2023-1 A3 5.16% Due 11/25/2025	3,992.11	103.99	4,096.10
10/25/2024	Paydown	05602RAD3	300,000.00	BMW Vehicle Owner Trust 2022-A A3 3.21% Due 8/25/2026	12,099.01	99.67	12,198.68

Cash Flow Report

As of October 31, 2023

Payment Date	Transaction Type	CUSIP	Quantity	Security Description	Principal Amount	Income	Total Amount
10/25/2024	Paydown	3137FJEH8	155,000.00	FHLMC K081 A2 3.9% Due 8/25/2028	0.00	503.75	503.75
10/25/2024	Paydown	3137BNGT5	500,000.00	FHLMC K054 A2 2.745% Due 1/25/2026	0.00	1,143.75	1,143.75
10/25/2024	Paydown	3137H4BY5	315,000.00	FHLMC K746 A2 2.031% Due 9/25/2028	0.00	533.14	533.14
10/25/2024	Paydown	3137FEBQ2	500,000.00	FHLMC K072 A2 3.444% Due 12/25/2027	0.00	1,435.00	1,435.00
10/25/2024	Paydown	3137FETN0	465,000.00	FHLMC K073 A2 3.35% Due 1/25/2028	0.00	1,298.13	1,298.13
OCT 2024					**250,406.09**	**27,964.61**	**278,370.70**
TOTAL					**11,262,892.39**	**746,283.93**	**12,009,176.32**

Important Disclosures

Chandler Asset Management, Inc. (“Chandler”) is an SEC registered investment adviser. For additional information about our firm, please see our current disclosures (Form ADV). To obtain a copy of our current disclosures, you may contact your client service representative by calling the number on the front of this statement or you may visit our website at www.chandlerasset.com.

Information contained in this monthly statement is confidential and is provided for informational purposes only and should not be construed as specific investment or legal advice. The information contained herein was obtained from sources believed to be reliable as of the date of this statement, but may become outdated or superseded at any time without notice.

Custody: Your qualified custodian bank maintains control of all assets reflected in this statement and we urge you to compare this statement to the one you receive from your qualified custodian. Chandler does not have any authority to withdraw or deposit funds from/to the custodian account.

Valuation: Prices are provided by IDC, an independent pricing source. In the event IDC does not provide a price or if the price provided is not reflective of fair market value, Chandler will obtain pricing from an alternative approved third party pricing source in accordance with our written valuation policy and procedures. Our valuation procedures are also disclosed in Item 5 of our Form ADV Part 2A.

Performance: Performance results are presented gross-of-advisory fees and represent the client’s Total Return. The deduction of advisory fees lowers performance results. These results include the reinvestment of dividends and other earnings. Past performance may not be indicative of future results. Therefore, clients should not assume that future performance of any specific investment or investment strategy will be profitable or equal to past performance levels. All investment strategies have the potential for profit or loss. Economic factors, market conditions or changes in investment strategies, contributions or withdrawals may materially alter the performance and results of your portfolio.

Source ice Data Indices, LLC ("ICE"), used with permission. ICE PERMITS USE OF THE ICE INDICES AND RELATED DATA ON AN "AS IS" BASIS; ICE, ITS AFFILIATES AND THEIR RESPECTIVE THIRD PARTY SUPPLIERS DISCLAIM ANY AND ALL WARRANTIES AND REPRESENTATIONS, EXPRESS AND/OR IMPLIED, INCLUDING ANY WARRANTIES OF MERCHANTABILITY OR FITNESS FOR A PARTICULAR PURPOSE OR USE, INCLUDING THE INDICES, INDEX DATA AND ANY DATA INCLUDED IN, RELATED TO, OR DERIVED THEREFROM. NEITHER ICE DATA, ITS AFFILIATES OR THEIR RESPECTIVE THIRD PARTY PROVIDERS GUARANTEE THE QUALITY, ADEQUACY, ACCURACY, TIMELINESS OR COMPLETENESS OF THE INDICES OR THE INDEX DATA OR ANY COMPONENT THEREOF, AND THE INDICES AND INDEX DATA AND ALL COMPONENTS THEREOF ARE PROVIDED ON AN "AS IS" BASIS AND LICENSEE'S USE IS AT LICENSEE'S OWN RISK. ICE DATA, ITS AFFILIATES AND THEIR RESPECTIVE THIRD PARTY DO NOT SPONSOR, ENDORSE, OR RECOMMEND CHANDLER, OR ANY OF ITS PRODUCTS OR SERVICES.

Index returns assume reinvestment of all distributions. Historical performance results for investment indexes generally do not reflect the deduction of transaction and/or custodial charges or the deduction of an investment management fee, the incurrence of which would have the effect of decreasing historical performance results. It is not possible to invest directly in an index.

Ratings: Ratings information have been provided by Moody’s, S&P and Fitch through data feeds we believe to be reliable as of the date of this statement, however we cannot guarantee its accuracy.

Security level ratings for U.S. Agency issued mortgage-backed securities (“MBS”) reflect the issuer rating because the securities themselves are not rated. The issuing U.S. Agency guarantees the full and timely payment of both principal and interest and carries a AA+/Aaa/AAA by S&P, Moody’s and Fitch respectively.

CITY of GARDENA

Report No. P-2023-19

TO: THE HONORABLE MAYOR AND CITY COUNCIL

SUBJECT: PERSONNEL REPORT

1. Request City Council approval to revise the City's Classification and Compensation Plan to reflect contractual cost-of-living increase previously approved through the Gardena Management Employees Organization (GMEO) Memorandum of Understanding (MOU), effective the first pay period in July 2023, for the City Manager. *Plan Attached; Attachment 1*

2. Request City Council approval to revise the City's Classification and Compensation Plan to add the new classification of Recreation Instructor to Schedule 5, Hourly Range to be set at $20.00 - $35.00. This position will be located in the Recreation and Human Services Department.
   Job description attached; Attachment 2

3. Request City Council approval to revise the City's Classification and Compensation Plan to add the new classification of Deputy City Manager to Schedule 335, ($15,404 - $19,660/month). This position will be located in the Elected and City Manager's Offices.
   Job description attached; Attachment 3

4. Report the Administrative Leave of ***QUENTIN WASHINGTON***, Police Officer with the Police Department, effective November 3, 2023.

5. Report the leave under the Family Medical Leave Act/California Family Rights Act (FMLA/CFRA) or Workers' Compensation of the following employees:
   a. Bus Operator, ***SEBASTIAN GOODLOW***, of the Transportation Department, effective October 1, 2023.
   b. Bus Operator, ***TAMARA RICHARDSON***, of the Transportation Department, effective October 11, 2023.
   c. Transportation Operations Supervisor, ***OSWALDO TORNERO***, of the Transportation Department, effective November 2, 2023.
   d. Bus Operator, ***VELDA GAINES***, of the Transportation Department, effective November 5, 2023.
   e. Permit/Licensing Technician II, ***RITA LOPEZ***, of the Community Development Department, effective November 6, 2023.
   f. Junior Accountant, ***DIANA RODRIGUEZ***, of the Administrative Services Department, effective November 9, 2023.

6. Report the Recruitment for the Open/Competitive position of Associate Planner (Community Development Department). This recruitment is open until filled.

7. Report the Recruitment for the Open/Competitive position of Certified Nursing Assistant (Recreation and Human Services Department). This recruitment is open until filled.

8. Report the Recruitment for the Open/Competitive position of Communications Liaison Officer (Elected and City Manager's Offices). This recruitment is open until filled.

9. Report the Recruitment for the Open/Competitive position of Community Services Officer (Community Development Department). This recruitment is open until filled.

10. Report the Recruitment for the Open/Competitive position of Human Services Aide (Recreation and Human Services Department). This is a continuous recruitment.

11. Report the Recruitment for the Open/Competitive position of On-Demand (Micro/Paratransit) Operator (Transportation Department). This recruitment is open until filled.

12. Report the Recruitment for the Open/Competitive position of Police Officer/Lateral (Police Department). This is a continuous recruitment.

13. Report the Recruitment for the Open/Competitive position of Police Trainee (Police Department). This is a continuous recruitment.

14. Report the Recruitment for the Open/Competitive position of Recreation Leader I/II (Recreation and Human Services Department). This is a continuous recruitment.

15. Report the Recruitment for the Open/Competitive position of Relief Bus Operator Trainee (Transportation Department). This is a continuous recruitment.

16. Report the Recruitment for the Open/Competitive position of Senior Account Clerk (Administrative Services Department). This recruitment is open until filled.

17. Report the Recruitment for the Open/Competitive position of Transit Mechanic (Transportation Department). This recruitment is open until filled.

18. Report the Recruitment for the Open/Competitive position of Transit Training and Safety Supervisor (Transportation Department). This recruitment is open until filled.

19. Report the Recruitment for the Open/Competitive position of Transportation Operations Supervisor (Transportation Department). This recruitment is open until filled.

CITY OF GARDENA
CLASSIFICATION AND COMPENSATION PLAN
EFFECTIVE DECEMBER 12, 2023

Adj to Schedule 350: 4% Equity Adjustment retroactively effective June 25, 2023

Add: Recreation Instructor, Schedule 5 Hourly Range set at $20.00 - $35.00

Add: Deputy City Manager, Schedule 335

5 Recreation Instructor

HOURLY RANGE 20.00 - 35.00

6 Clerical Aide I
6 Police Aide

STEP	*4*	*5*	*6*
ANNUAL	31,152.00	32,712.00	34,344.00
MONTHLY	2,596.00	2,726.00	2,862.00
BI-WEEKLY	1,198.15	1,258.15	1,320.92
HOURLY	14.9769	15.7269	16.5115

7 Peer Advocate Counselor II
7 Storeroom Aide

STEP	*6*
ANNUAL	33,552.00
MONTHLY	2,796.00
BI-WEEKLY	1,290.46
HOURLY	16.1308

8 Community Aide I

STEP	*5*	*6*
ANNUAL	32,748.00	34,380.00
MONTHLY	2,729.00	2,865.00
BI-WEEKLY	1,259.54	1,322.31
HOURLY	15.7442	16.5288

13

STEP	*5*	*6*
ANNUAL	33,600.00	35,280.00
MONTHLY	2,800.00	2,940.00
BI-WEEKLY	1,292.31	1,356.92
HOURLY	16.1538	16.9615

14 Pool Cashier

STEP	*4*	*5*	*6*
ANNUAL	32,808.00	34,452.00	36,180.00
MONTHLY	2,734.00	2,871.00	3,015.00
BI-WEEKLY	1,261.85	1,325.08	1,391.54
HOURLY	15.7731	16.5635	17.3942

15

STEP	*4*	*5*	*6*
ANNUAL	33,624.00	35,304.00	37,068.00
MONTHLY	2,802.00	2,942.00	3,089.00
BI-WEEKLY	1,293.23	1,357.85	1,425.69
HOURLY	16.1654	16.9731	17.8212

16

STEP	[redacted]	*3*	*4*	*5*	*6*
ANNUAL		32,832.00	34,476.00	36,204.00	38,016.00
MONTHLY		2,736.00	2,873.00	3,017.00	3,168.00
BI-WEEKLY		1,262.77	1,326.00	1,392.46	1,462.15
HOURLY		15.7846	16.5750	17.4058	18.2769

17 Clerk Typist

STEP	[redacted]	*3*	*4*	*5*	*6*
ANNUAL		33,660.00	35,340.00	37,104.00	38,964.00
MONTHLY		2,805.00	2,945.00	3,092.00	3,247.00
BI-WEEKLY		1,294.62	1,359.23	1,427.08	1,498.62
HOURLY		16.1827	16.9904	17.8385	18.7327

18

STEP	[redacted]	*2*	*3*	*4*	*5*	*6*
ANNUAL		32,856.00	34,500.00	36,228.00	38,040.00	39,948.00
MONTHLY		2,738.00	2,875.00	3,019.00	3,170.00	3,329.00
BI-WEEKLY		1,263.69	1,326.92	1,393.38	1,463.08	1,536.46
HOURLY		15.7962	16.5865	17.4173	18.2885	19.2058

19

STEP	[redacted]	*2*	*3*	*4*	*5*	*6*
ANNUAL		33,672.00	35,352.00	37,116.00	38,976.00	40,920.00
MONTHLY		2,806.00	2,946.00	3,093.00	3,248.00	3,410.00
BI-WEEKLY		1,295.08	1,359.69	1,427.54	1,499.08	1,573.85
HOURLY		16.1885	16.9962	17.8442	18.7385	19.6731

20

STEP	*1*	*2*	*3*	*4*	*5*	*6*
ANNUAL	32,868.00	34,512.00	36,240.00	38,052.00	39,960.00	41,964.00
MONTHLY	2,739.00	2,876.00	3,020.00	3,171.00	3,330.00	3,497.00
BI-WEEKLY	1,264.15	1,327.38	1,393.85	1,463.54	1,536.92	1,614.00
HOURLY	15.8019	16.5923	17.4231	18.2942	19.2115	20.1750

21 Police Cadet

STEP	*1*	*2*	*3*	*4*	*5*	*6*
ANNUAL	33,684.00	35,364.00	37,128.00	38,988.00	40,932.00	42,984.00
MONTHLY	2,807.00	2,947.00	3,094.00	3,249.00	3,411.00	3,582.00
BI-WEEKLY	1,295.54	1,360.15	1,428.00	1,499.54	1,574.31	1,653.23
HOURLY	16.1942	17.0019	17.8500	18.7442	19.6788	20.6654

22 FCC Program Assistant I
22 Geriatric Aide
22 Human Services Aide
22 Lifeguard/Instructor
22 Recreation Leader I

STEP	*1*	*2*	*3*	*4*	*5*	*6*
ANNUAL	34,524.00	36,252.00	38,064.00	39,972.00	41,976.00	44,076.00
MONTHLY	2,877.00	3,021.00	3,172.00	3,331.00	3,498.00	3,673.00
BI-WEEKLY	1,327.85	1,394.31	1,464.00	1,537.38	1,614.46	1,695.23
HOURLY	16.5981	17.4288	18.3000	19.2173	20.1808	21.1904

23 Community Aide II

STEP	*1*	*2*	*3*	*4*	*5*	*6*
ANNUAL	35,388.00	37,152.00	39,012.00	40,968.00	43,020.00	45,168.00
MONTHLY	2,949.00	3,096.00	3,251.00	3,414.00	3,585.00	3,764.00
BI-WEEKLY	1,361.08	1,428.92	1,500.46	1,575.69	1,654.62	1,737.23
HOURLY	17.0135	17.8615	18.7558	19.6962	20.6827	21.7154

24

STEP	*1*	*2*	*3*	*4*	*5*	*6*
ANNUAL	36,276.00	38,088.00	39,996.00	42,000.00	44,100.00	46,308.00
MONTHLY	3,023.00	3,174.00	3,333.00	3,500.00	3,675.00	3,859.00
BI-WEEKLY	1,395.23	1,464.92	1,538.31	1,615.38	1,696.15	1,781.08
HOURLY	17.4404	18.3115	19.2288	20.1923	21.2019	22.2635

25

STEP	*1*	*2*	*3*	*4*	*5*	*6*
ANNUAL	37,188.00	39,048.00	41,004.00	43,056.00	45,204.00	47,460.00
MONTHLY	3,099.00	3,254.00	3,417.00	3,588.00	3,767.00	3,955.00
BI-WEEKLY	1,430.31	1,501.85	1,577.08	1,656.00	1,738.62	1,825.38
HOURLY	17.8788	18.7731	19.7135	20.7000	21.7327	22.8173

26 Pool Supervisor

STEP	*1*	*2*	*3*	*4*	*5*	*6*
ANNUAL	38,112.00	40,020.00	42,024.00	44,124.00	46,332.00	48,648.00
MONTHLY	3,176.00	3,335.00	3,502.00	3,677.00	3,861.00	4,054.00
BI-WEEKLY	1,465.85	1,539.23	1,616.31	1,697.08	1,782.00	1,871.08
HOURLY	18.3231	19.2404	20.2038	21.2135	22.2750	23.3885

27

STEP	*1*	*2*	*3*	*4*	*5*	*6*
ANNUAL	39,060.00	41,016.00	43,068.00	45,216.00	47,472.00	49,848.00
MONTHLY	3,255.00	3,418.00	3,589.00	3,768.00	3,956.00	4,154.00
BI-WEEKLY	1,502.31	1,577.54	1,656.46	1,739.08	1,825.85	1,917.23
HOURLY	18.7788	19.7192	20.7058	21.7385	22.8231	23.9654

28 Certified Nursing Assistant
28 Meal Services Coordinator
28 Police Assistant
28 Recreation Leader II

STEP	*1*	*2*	*3*	*4*	*5*	*6*
ANNUAL	40,032.00	42,036.00	44,136.00	46,344.00	48,660.00	51,096.00
MONTHLY	3,336.00	3,503.00	3,678.00	3,862.00	4,055.00	4,258.00
BI-WEEKLY	1,539.69	1,616.77	1,697.54	1,782.46	1,871.54	1,965.23
HOURLY	19.2462	20.2096	21.2192	22.2808	23.3942	24.5654

29 Account Clerk
29 Customer Service Clerk I
29 Printing & Technology Intern
29 Recreation Therapist

STEP	*1*	*2*	*3*	*4*	*5*	*6*
ANNUAL	41,028.00	43,080.00	45,240.00	47,508.00	49,884.00	52,380.00
MONTHLY	3,419.00	3,590.00	3,770.00	3,959.00	4,157.00	4,365.00
BI-WEEKLY	1,578.00	1,656.92	1,740.00	1,827.23	1,918.62	2,014.62
HOURLY	19.7250	20.7115	21.7500	22.8404	23.9827	25.1827

30 Custodian I
30 FCC Education Assistant II
30 FCC Program Assistant II
30 Office Specialist

	1	*2*	*3*	*4*	*5*	*6*
ANNUAL	42,048.00	44,148.00	46,356.00	48,672.00	51,108.00	53,664.00
MONTHLY	3,504.00	3,679.00	3,863.00	4,056.00	4,259.00	4,472.00
BI-WEEKLY	1,617.23	1,698.00	1,782.92	1,872.00	1,965.69	2,064.00
HOURLY	20.2154	21.2250	22.2865	23.4000	24.5712	25.8000

31 On-Demand (Micro/Paratransit) Operator
31 Paratransit Driver

STEP	*1*	*2*	*3*	*4*	*5*	*6*
ANNUAL	43,104.00	45,264.00	47,532.00	49,908.00	52,404.00	55,020.00
MONTHLY	3,592.00	3,772.00	3,961.00	4,159.00	4,367.00	4,585.00
BI-WEEKLY	1,657.85	1,740.92	1,828.15	1,919.54	2,015.54	2,116.15
HOURLY	20.7231	21.7615	22.8519	23.9942	25.1942	26.4519

32 Home Improvement Maintenance Helper
32 Right-of-Way Maintenance Worker

STEP	*1*	*2*	*3*	*4*	*5*	*6*
ANNUAL	44,184.00	46,392.00	48,708.00	51,144.00	53,700.00	56,388.00
MONTHLY	3,682.00	3,866.00	4,059.00	4,262.00	4,475.00	4,699.00
BI-WEEKLY	1,699.38	1,784.31	1,873.38	1,967.08	2,065.38	2,168.77
HOURLY	21.2423	22.3038	23.4173	24.5885	25.8173	27.1096

33 Customer Service Clerk II
33 Equipment Utility Worker I
33 Public Safety Officer
33 Relief Bus Operator Trainee

STEP	*1*	*2*	*3*	*4*	*5*	*6*
ANNUAL	45,288.00	47,556.00	49,932.00	52,428.00	55,044.00	57,792.00
MONTHLY	3,774.00	3,963.00	4,161.00	4,369.00	4,587.00	4,816.00
BI-WEEKLY	1,741.85	1,829.08	1,920.46	2,016.46	2,117.08	2,222.77
HOURLY	21.7731	22.8635	24.0058	25.2058	26.4635	27.7846

34 Custodian II
34 Graffiti Technician
34 On-Demand Transit Dispatcher
34 Paratransit Dispatcher
34 Park Maintenance Worker I

STEP	*1*	*2*	*3*	*4*	*5*	*6*
ANNUAL	46,416.00	48,732.00	51,168.00	53,724.00	56,412.00	59,232.00
MONTHLY	3,868.00	4,061.00	4,264.00	4,477.00	4,701.00	4,936.00
BI-WEEKLY	1,785.23	1,874.31	1,968.00	2,066.31	2,169.69	2,278.15
HOURLY	22.3154	23.4288	24.6000	25.8288	27.1212	28.4769

35 Community Aide III
35 Help Desk Technician
35 Street Maintenance Worker

STEP	*1*	*2*	*3*	*4*	*5*	*6*
ANNUAL	47,580.00	49,956.00	52,452.00	55,080.00	57,840.00	60,732.00
MONTHLY	3,965.00	4,163.00	4,371.00	4,590.00	4,820.00	5,061.00
BI-WEEKLY	1,830.00	1,921.38	2,017.38	2,118.46	2,224.62	2,335.85
HOURLY	22.8750	24.0173	25.2173	26.4808	27.8077	29.1981

36 Intermediate Clerk Typist

STEP	*1*	*2*	*3*	*4*	*5*	*6*
ANNUAL	48,768.00	51,204.00	53,760.00	56,448.00	59,268.00	62,232.00
MONTHLY	4,064.00	4,267.00	4,480.00	4,704.00	4,939.00	5,186.00
BI-WEEKLY	1,875.69	1,969.38	2,067.69	2,171.08	2,279.54	2,393.54
HOURLY	23.4462	24.6173	25.8462	27.1385	28.4942	29.9192

37 Nutrition Services Coordinator
37 Relief Bus Operator

STEP	*1*	*2*	*3*	*4*	*5*	*6*
ANNUAL	49,992.00	52,488.00	55,116.00	57,876.00	60,768.00	63,804.00
MONTHLY	4,166.00	4,374.00	4,593.00	4,823.00	5,064.00	5,317.00
BI-WEEKLY	1,922.77	2,018.77	2,119.85	2,226.00	2,337.23	2,454.00
HOURLY	24.0346	25.2346	26.4981	27.8250	29.2154	30.6750

38 Activity Coordinator
38 Equipment Utility Worker II
38 Homeless Coordinator
38 Police Records Technician I
38 Police Service Technician
38 Purchasing Clerk
38 Senior Account Clerk
38 Senior Clerk Typist

STEP	*1*	*2*	*3*	*4*	*5*	*6*
ANNUAL	51,240.00	53,808.00	56,496.00	59,316.00	62,280.00	65,400.00
MONTHLY	4,270.00	4,484.00	4,708.00	4,943.00	5,190.00	5,450.00
BI-WEEKLY	1,970.77	2,069.54	2,172.92	2,281.38	2,395.38	2,515.38
HOURLY	24.6346	25.8692	27.1615	28.5173	29.9423	31.4423

39 Apprentice Mechanic
39 Home Improvement Lead Person
39 Park Maintenance Worker II
39 Records Management Coordinator

STEP	*1*	*2*	*3*	*4*	*5*	*6*
ANNUAL	52,524.00	55,152.00	57,912.00	60,804.00	63,840.00	67,032.00
MONTHLY	4,377.00	4,596.00	4,826.00	5,067.00	5,320.00	5,586.00
BI-WEEKLY	2,020.15	2,121.23	2,227.38	2,338.62	2,455.38	2,578.15
HOURLY	25.2519	26.5154	27.8423	29.2327	30.6923	32.2269

40 Engineering Aide
40 FCC Education Assistant III
40 FCC Program Assistant III
40 Public Works Coordinator
40 Sr. Transit Utility Specialist

STEP	*1*	*2*	*3*	*4*	*5*	*6*
ANNUAL	53,832.00	56,520.00	59,352.00	62,316.00	65,436.00	68,712.00
MONTHLY	4,486.00	4,710.00	4,946.00	5,193.00	5,453.00	5,726.00
BI-WEEKLY	2,070.46	2,173.85	2,282.77	2,396.77	2,516.77	2,642.77
HOURLY	25.8808	27.1731	28.5346	29.9596	31.4596	33.0346

41 Deputy City Clerk I
41 Permit/Licensing Technician I

STEP	*1*	*2*	*3*	*4*	*5*	*6*
ANNUAL	55,176.00	57,936.00	60,828.00	63,864.00	67,056.00	70,404.00
MONTHLY	4,598.00	4,828.00	5,069.00	5,322.00	5,588.00	5,867.00
BI-WEEKLY	2,122.15	2,228.31	2,339.54	2,456.31	2,579.08	2,707.85
HOURLY	26.5269	27.8538	29.2442	30.7038	32.2385	33.8481

42 Community Center Coordinator
42 Community Services Officer
42 Human Services Coordinator
42 Police Records Technician II
42 Police Service Officer
42 Recreation Coordinator
42 Secretary
42 Tree Trimmer I

STEP	*1*	*2*	*3*	*4*	*5*	*6*
ANNUAL	56,556.00	59,388.00	62,352.00	65,472.00	68,748.00	72,180.00
MONTHLY	4,713.00	4,949.00	5,196.00	5,456.00	5,729.00	6,015.00
BI-WEEKLY	2,175.23	2,284.15	2,398.15	2,518.15	2,644.15	2,776.15
HOURLY	27.1904	28.5519	29.9769	31.4769	33.0519	34.7019

43 Administrative Aide
43 Building Maintenance Worker
43 Cement Finisher
43 Human Resources / Department Coordinator
43 Payroll / Personnel Technician
43 Senior Citizens Social Services Coordinator
43 Transit Maintenance Coordinator

STEP	*1*	*2*	*3*	*4*	*5*	*6*
ANNUAL	57,972.00	60,876.00	63,924.00	67,116.00	70,476.00	74,004.00
MONTHLY	4,831.00	5,073.00	5,327.00	5,593.00	5,873.00	6,167.00
BI-WEEKLY	2,229.69	2,341.38	2,458.62	2,581.38	2,710.62	2,846.31
HOURLY	27.8712	29.2673	30.7327	32.2673	33.8827	35.5788

44 Administrative Secretary
44 Building Aide
44 Building/Planning Technician
44 Permit/Licensing Technician II
44 Sewer Maintenance Worker
44 Tree Trimmer II

STEP	*1*	*2*	*3*	*4*	*5*	*6*
ANNUAL	59,424.00	62,400.00	65,520.00	68,796.00	72,240.00	75,852.00
MONTHLY	4,952.00	5,200.00	5,460.00	5,733.00	6,020.00	6,321.00
BI-WEEKLY	2,285.54	2,400.00	2,520.00	2,646.00	2,778.46	2,917.38
HOURLY	28.5692	30.0000	31.5000	33.0750	34.7308	36.4673

45 Street Sweeper Operator

STEP	*1*	*2*	*3*	*4*	*5*	*6*
ANNUAL	60,912.00	63,960.00	67,164.00	70,524.00	74,052.00	77,760.00
MONTHLY	5,076.00	5,330.00	5,597.00	5,877.00	6,171.00	6,480.00
BI-WEEKLY	2,342.77	2,460.00	2,583.23	2,712.46	2,848.15	2,990.77
HOURLY	29.2846	30.7500	32.2904	33.9058	35.6019	37.3846

46 Heavy Equipment Operator
46 Street Traffic Painter

STEP	*1*	*2*	*3*	*4*	*5*	*6*
ANNUAL	62,436.00	65,556.00	68,832.00	72,276.00	75,888.00	79,680.00
MONTHLY	5,203.00	5,463.00	5,736.00	6,023.00	6,324.00	6,640.00
BI-WEEKLY	2,401.38	2,521.38	2,647.38	2,779.85	2,918.77	3,064.62
HOURLY	30.0173	31.5173	33.0923	34.7481	36.4846	38.3077

47 Equipment Mechanic
47 Graphics Technician
47 Maintenance Painter
47 Senior Building Maintenance Worker
47 Transit Mechanic
47 Transit Parts/Storeroom Coordinator

STEP	*1*	*2*	*3*	*4*	*5*	*6*
ANNUAL	63,996.00	67,200.00	70,560.00	74,088.00	77,796.00	81,684.00
MONTHLY	5,333.00	5,600.00	5,880.00	6,174.00	6,483.00	6,807.00
BI-WEEKLY	2,461.38	2,584.62	2,713.85	2,849.54	2,992.15	3,141.69
HOURLY	30.7673	32.3077	33.9231	35.6192	37.4019	39.2712

48 Custodian-Lead
48 Financial Services Technician
48 Human Resources Technician
48 Junior Accountant

STEP	*1*	*2*	*3*	*4*	*5*	*6*
ANNUAL	65,592.00	68,868.00	72,312.00	75,924.00	79,716.00	83,700.00
MONTHLY	5,466.00	5,739.00	6,026.00	6,327.00	6,643.00	6,975.00
BI-WEEKLY	2,522.77	2,648.77	2,781.23	2,920.15	3,066.00	3,219.23
HOURLY	31.5346	33.1096	34.7654	36.5019	38.3250	40.2404

49 Administrative Analyst I
49 Community Services Counselor
49 Program Coordinator
49 Recreation Supervisor

STEP	*1*	*2*	*3*	*4*	*5*	*6*
ANNUAL	67,236.00	70,596.00	74,124.00	77,832.00	81,720.00	85,812.00
MONTHLY	5,603.00	5,883.00	6,177.00	6,486.00	6,810.00	7,151.00
BI-WEEKLY	2,586.00	2,715.23	2,850.92	2,993.54	3,143.08	3,300.46
HOURLY	32.3250	33.9404	35.6365	37.4192	39.2885	41.2558

50 Case Management Supervisor/Instructor
50 Transit Dispatcher/Operations Assistant

STEP	*1*	*2*	*3*	*4*	*5*	*6*
ANNUAL	68,916.00	72,360.00	75,984.00	79,788.00	83,772.00	87,960.00
MONTHLY	5,743.00	6,030.00	6,332.00	6,649.00	6,981.00	7,330.00
BI-WEEKLY	2,650.62	2,783.08	2,922.46	3,068.77	3,222.00	3,383.08
HOURLY	33.1327	34.7885	36.5308	38.3596	40.2750	42.2885

51 Electrical/Signal Technician I
51 Emergency Preparedness Coordinator
51 Engineering Technician
51 Executive Assistant to Chief of Police
51 General Building Inspector
51 Information Technology Coordinator
51 Lead Equipment Mechanic
51 Lead Mechanic
51 Planning Assistant

STEP	*1*	*2*	*3*	*4*	*5*	*6*
ANNUAL	70,644.00	74,172.00	77,880.00	81,780.00	85,872.00	90,168.00
MONTHLY	5,887.00	6,181.00	6,490.00	6,815.00	7,156.00	7,514.00
BI-WEEKLY	2,717.08	2,852.77	2,995.38	3,145.38	3,302.77	3,468.00
HOURLY	33.9635	35.6596	37.4423	39.3173	41.2846	43.3500

52 Payroll Specialist

STEP	*1*	*2*	*3*	*4*	*5*	*6*
ANNUAL	72,408.00	76,032.00	79,836.00	83,832.00	88,020.00	92,424.00
MONTHLY	6,034.00	6,336.00	6,653.00	6,986.00	7,335.00	7,702.00
BI-WEEKLY	2,784.92	2,924.31	3,070.62	3,224.31	3,385.38	3,554.77
HOURLY	34.8115	36.5538	38.3827	40.3038	42.3173	44.4346

53 Code Enforcement Officer
53 FCC Education Coordinator
53 Park Maintenance Lead
53 Public Works Inspector
53 Public Works Lead
53 Transit Operations Training Coordinator

STEP	*1*	*2*	*3*	*4*	*5*	*6*
ANNUAL	74,220.00	77,928.00	81,828.00	85,920.00	90,216.00	94,728.00
MONTHLY	6,185.00	6,494.00	6,819.00	7,160.00	7,518.00	7,894.00
BI-WEEKLY	2,854.62	2,997.23	3,147.23	3,304.62	3,469.85	3,643.38
HOURLY	35.6827	37.4654	39.3404	41.3077	43.3731	45.5423

54 Administrative Analyst II
54 Building Maintenance Lead
54 Forensic Technician
54 Transit Marketing Coordinator

STEP	*1*	*2*	*3*	*4*	*5*	*6*
ANNUAL	76,080.00	79,884.00	83,880.00	88,080.00	92,484.00	97,104.00
MONTHLY	6,340.00	6,657.00	6,990.00	7,340.00	7,707.00	8,092.00
BI-WEEKLY	2,926.15	3,072.46	3,226.15	3,387.69	3,557.08	3,734.77
HOURLY	36.5769	38.4058	40.3269	42.3462	44.4635	46.6846

55 Electrical/Signal Technician II

STEP	*1*	*2*	*3*	*4*	*5*	*6*
ANNUAL	77,988.00	81,888.00	85,980.00	90,276.00	94,788.00	99,528.00
MONTHLY	6,499.00	6,824.00	7,165.00	7,523.00	7,899.00	8,294.00
BI-WEEKLY	2,999.54	3,149.54	3,306.92	3,472.15	3,645.69	3,828.00
HOURLY	37.4942	39.3692	41.3365	43.4019	45.5712	47.8500

56 Administrative Coordinator
56 Assistant Engineer
56 FCC Program Coordinator

STEP	*1*	*2*	*3*	*4*	*5*	*6*
ANNUAL	79,932.00	83,928.00	88,128.00	92,532.00	97,164.00	102,024.00
MONTHLY	6,661.00	6,994.00	7,344.00	7,711.00	8,097.00	8,502.00
BI-WEEKLY	3,074.31	3,228.00	3,389.54	3,558.92	3,737.08	3,924.00
HOURLY	38.4288	40.3500	42.3692	44.4865	46.7135	49.0500

57 Communications Liaison Officer
57 Senior Accountant

STEP	*1*	*2*	*3*	*4*	*5*	*6*
ANNUAL	81,936.00	86,028.00	90,324.00	94,836.00	99,576.00	104,556.00
MONTHLY	6,828.00	7,169.00	7,527.00	7,903.00	8,298.00	8,713.00
BI-WEEKLY	3,151.38	3,308.77	3,474.00	3,647.54	3,829.85	4,021.38
HOURLY	39.3923	41.3596	43.4250	45.5942	47.8731	50.2673

58 Associate Planner
58 Code Enforcement Supervisor

STEP	*1*	*2*	*3*	*4*	*5*	*6*
ANNUAL	83,988.00	88,188.00	92,592.00	97,224.00	102,084.00	107,184.00
MONTHLY	6,999.00	7,349.00	7,716.00	8,102.00	8,507.00	8,932.00
BI-WEEKLY	3,230.31	3,391.85	3,561.23	3,739.38	3,926.31	4,122.46
HOURLY	40.3788	42.3981	44.5154	46.7423	49.0788	51.5308

59 Administrative Support Services Supervisor

STEP	*1*	*2*	*3*	*4*	*5*	*6*
ANNUAL	86,088.00	90,396.00	94,920.00	99,672.00	104,652.00	109,884.00
MONTHLY	7,174.00	7,533.00	7,910.00	8,306.00	8,721.00	9,157.00
BI-WEEKLY	3,311.08	3,476.77	3,650.77	3,833.54	4,025.08	4,226.31
HOURLY	41.3885	43.4596	45.6346	47.9192	50.3135	52.8288

60

STEP	*1*	*2*	*3*	*4*	*5*	*6*
ANNUAL	88,236.00	92,652.00	97,284.00	102,144.00	107,256.00	112,620.00
MONTHLY	7,353.00	7,721.00	8,107.00	8,512.00	8,938.00	9,385.00
BI-WEEKLY	3,393.69	3,563.54	3,741.69	3,928.62	4,125.23	4,331.54
HOURLY	42.4212	44.5442	46.7712	49.1077	51.5654	54.1442

61 Administrative Analyst III
61 Associate Engineer
61 Information Technology Systems Analyst - Transit
61 Transit Planning and Scheduling Analyst

STEP	*1*	*2*	*3*	*4*	*5*	*6*
ANNUAL	90,444.00	94,968.00	99,720.00	104,712.00	109,944.00	115,440.00
MONTHLY	7,537.00	7,914.00	8,310.00	8,726.00	9,162.00	9,620.00
BI-WEEKLY	3,478.62	3,652.62	3,835.38	4,027.38	4,228.62	4,440.00
HOURLY	43.4827	45.6577	47.9423	50.3423	52.8577	55.5000

62 Information Technology Supervisor

STEP	*1*	*2*	*3*	*4*	*5*	*6*
ANNUAL	92,700.00	97,332.00	102,204.00	107,316.00	112,680.00	118,320.00
MONTHLY	7,725.00	8,111.00	8,517.00	8,943.00	9,390.00	9,860.00
BI-WEEKLY	3,565.38	3,743.54	3,930.92	4,127.54	4,333.85	4,550.77
HOURLY	44.5673	46.7942	49.1365	51.5942	54.1731	56.8846

63

STEP	*1*	*2*	*3*	*4*	*5*	*6*
ANNUAL	95,016.00	99,768.00	104,760.00	110,004.00	115,500.00	121,272.00
MONTHLY	7,918.00	8,314.00	8,730.00	9,167.00	9,625.00	10,106.00
BI-WEEKLY	3,654.46	3,837.23	4,029.23	4,230.92	4,442.31	4,664.31
HOURLY	45.6808	47.9654	50.3654	52.8865	55.5288	58.3038

64

STEP	*1*	*2*	*3*	*4*	*5*	*6*
ANNUAL	97,392.00	102,264.00	107,376.00	112,740.00	118,380.00	124,296.00
MONTHLY	8,116.00	8,522.00	8,948.00	9,395.00	9,865.00	10,358.00
BI-WEEKLY	3,745.85	3,933.23	4,129.85	4,336.15	4,553.08	4,780.62
HOURLY	46.8231	49.1654	51.6231	54.2019	56.9135	59.7577

65

STEP	*1*	*2*	*3*	*4*	*5*	*6*
ANNUAL	99,828.00	104,820.00	110,064.00	115,572.00	121,356.00	127,428.00
MONTHLY	8,319.00	8,735.00	9,172.00	9,631.00	10,113.00	10,619.00
BI-WEEKLY	3,839.54	4,031.54	4,233.23	4,445.08	4,667.54	4,901.08
HOURLY	47.9942	50.3942	52.9154	55.5635	58.3442	61.2635

66 Civil Engineer

STEP	*1*	*2*	*3*	*4*	*5*	*6*
ANNUAL	102,324.00	107,436.00	112,812.00	118,452.00	124,380.00	130,596.00
MONTHLY	8,527.00	8,953.00	9,401.00	9,871.00	10,365.00	10,883.00
BI-WEEKLY	3,935.54	4,132.15	4,338.92	4,555.85	4,783.85	5,022.92
HOURLY	49.1942	51.6519	54.2365	56.9481	59.7981	62.7865

67

STEP	*1*	*2*	*3*	*4*	*5*	*6*
ANNUAL	104,880.00	110,124.00	115,632.00	121,416.00	127,488.00	133,860.00
MONTHLY	8,740.00	9,177.00	9,636.00	10,118.00	10,624.00	11,155.00
BI-WEEKLY	4,033.85	4,235.54	4,447.38	4,669.85	4,903.38	5,148.46
HOURLY	50.4231	52.9442	55.5923	58.3731	61.2923	64.3558

90 Bus Operator

STEP	*1*	*2*	*3*	*4*	*5*	*6*
ANNUAL	57,144.00	60,000.00	63,000.00	66,156.00	69,468.00	72,936.00
MONTHLY	4,762.00	5,000.00	5,250.00	5,513.00	5,789.00	6,078.00
BI-WEEKLY	2,197.85	2307.69	2423.08	2,544.46	2,671.85	2,805.23
HOURLY	27.4731	28.8462	30.2885	31.8058	33.3981	35.0654
Specialty - 5%	238.10	250.00	262.50	275.65	289.45	303.90

104

STEP	*1*	*2*	*3*	*4*	*5*	*6*
ANNUAL	61,152.00	64,212.00	67,428.00	70,800.00	74,340.00	78,060.00
MONTHLY	5,096.00	5,351.00	5,619.00	5,900.00	6,195.00	6,505.00
BI-WEEKLY	2,352.00	2,469.69	2,593.38	2,723.08	2,859.23	3,002.31
HOURLY	29.4000	30.8712	32.4173	34.0385	35.7404	37.5288
Lgy Bonus 20	127.40	133.78	140.48	147.50	154.88	162.63
Lgy Bonus 25	254.80	267.55	280.95	295.00	309.75	325.25
Lgy Bonus 30	382.20	401.33	421.43	442.50	464.63	487.88

105

STEP	*1*	*2*	*3*	*4*	*5*	*6*
ANNUAL	62,676.00	65,808.00	69,096.00	72,552.00	76,176.00	79,980.00
MONTHLY	5,223.00	5,484.00	5,758.00	6,046.00	6,348.00	6,665.00
BI-WEEKLY	2,410.62	2531.08	2657.54	2790.46	2929.85	3076.15
HOURLY	30.1327	31.6385	33.2192	34.8808	36.6231	38.4519
Lgy Bonus 20	130.58	137.10	143.95	151.15	158.70	166.63
Lgy Bonus 25	261.15	274.20	287.90	302.30	317.40	333.25
Lgy Bonus 30	391.73	411.30	431.85	453.45	476.10	499.88

106

STEP	*1*	*2*	*3*	*4*	*5*	*6*
ANNUAL	64,248.00	67,464.00	70,836.00	74,376.00	78,096.00	81,996.00
MONTHLY	5,354.00	5,622.00	5,903.00	6,198.00	6,508.00	6,833.00
BI-WEEKLY	2,471.08	2,594.77	2,724.46	2,860.62	3,003.69	3,153.69
HOURLY	30.8885	32.4346	34.0558	35.7577	37.5462	39.4212
Lgy Bonus 20	133.85	140.55	147.58	154.95	162.70	170.83
Lgy Bonus 25	267.70	281.10	295.15	309.90	325.40	341.65
Lgy Bonus 30	401.55	421.65	442.73	464.85	488.10	512.48

107

STEP	*1*	*2*	*3*	*4*	*5*	*6*
ANNUAL	65,856.00	69,144.00	72,600.00	76,236.00	80,052.00	84,060.00
MONTHLY	5,488.00	5,762.00	6,050.00	6,353.00	6,671.00	7,005.00
BI-WEEKLY	2,532.92	2,659.38	2,792.31	2,932.15	3,078.92	3,233.08
HOURLY	31.6615	33.2423	34.9038	36.6519	38.4865	40.4135
Lgy Bonus 20	137.20	144.05	151.25	158.83	166.78	175.13
Lgy Bonus 25	274.40	288.10	302.50	317.65	333.55	350.25
Lgy Bonus 30	411.60	432.15	453.75	476.48	500.33	525.38

108 Economic Development Analyst

STEP	*1*	*2*	*3*	*4*	*5*	*6*
ANNUAL	67,500.00	70,872.00	74,412.00	78,132.00	82,044.00	86,148.00
MONTHLY	5,625.00	5,906.00	6,201.00	6,511.00	6,837.00	7,179.00
BI-WEEKLY	2,596.15	2,725.85	2,862.00	3,005.08	3,155.54	3,313.38
HOURLY	32.4519	34.0731	35.7750	37.5635	39.4442	41.4173
Lgy Bonus 20	140.63	147.65	155.03	162.78	170.93	179.48
Lgy Bonus 25	281.25	295.30	310.05	325.55	341.85	358.95
Lgy Bonus 30	421.88	442.95	465.08	488.33	512.78	538.43

109

STEP	*1*	*2*	*3*	*4*	*5*	*6*
ANNUAL	69,192.00	72,648.00	76,284.00	80,100.00	84,108.00	88,308.00
MONTHLY	5,766.00	6,054.00	6,357.00	6,675.00	7,009.00	7,359.00
BI-WEEKLY	2,661.23	2,794.15	2,934.00	3,080.77	3,234.92	3,396.46
HOURLY	33.2654	34.9269	36.6750	38.5096	40.4365	42.4558
Lgy Bonus 20	144.15	151.35	158.93	166.88	175.23	183.98
Lgy Bonus 25	288.30	302.70	317.85	333.75	350.45	367.95
Lgy Bonus 30	432.45	454.05	476.78	500.63	525.68	551.93

110

STEP	*1*	*2*	*3*	*4*	*5*	*6*
ANNUAL	70,920.00	74,472.00	78,192.00	82,104.00	86,208.00	90,516.00
MONTHLY	5,910.00	6,206.00	6,516.00	6,842.00	7,184.00	7,543.00
BI-WEEKLY	2,727.69	2,864.31	3,007.38	3,157.85	3,315.69	3,481.38
HOURLY	34.0962	35.8038	37.5923	39.4731	41.4462	43.5173
Lgy Bonus 20	147.75	155.15	162.90	171.05	179.60	188.58
Lgy Bonus 25	295.50	310.30	325.80	342.10	359.20	377.15
Lgy Bonus 30	443.25	465.45	488.70	513.15	538.80	565.73

111

STEP	*1*	*2*	*3*	*4*	*5*	*6*
ANNUAL	72,696.00	76,332.00	80,148.00	84,156.00	88,368.00	92,784.00
MONTHLY	6,058.00	6,361.00	6,679.00	7,013.00	7,364.00	7,732.00
BI-WEEKLY	2,796.00	2,935.85	3,082.62	3,236.77	3,398.77	3,568.62
HOURLY	34.9500	36.6981	38.5327	40.4596	42.4846	44.6077
Lgy Bonus 20	151.45	159.03	166.98	175.33	184.10	193.30
Lgy Bonus 25	302.90	318.05	333.95	350.65	368.20	386.60
Lgy Bonus 30	454.35	477.08	500.93	525.98	552.30	579.90

112

STEP	*1*	*2*	*3*	*4*	*5*	*6*
ANNUAL	74,532.00	78,264.00	82,176.00	86,280.00	90,600.00	95,136.00
MONTHLY	6,211.00	6,522.00	6,848.00	7,190.00	7,550.00	7,928.00
BI-WEEKLY	2,866.62	3,010.15	3,160.62	3,318.46	3,484.62	3,659.08
HOURLY	35.8327	37.6269	39.5077	41.4808	43.5577	45.7385
Lgy Bonus 20	155.28	163.05	171.20	179.75	188.75	198.20
Lgy Bonus 25	310.55	326.10	342.40	359.50	377.50	396.40
Lgy Bonus 30	465.83	489.15	513.60	539.25	566.25	594.60

113

STEP	*1*	*2*	*3*	*4*	*5*	*6*
ANNUAL	76,392.00	80,208.00	84,216.00	88,428.00	92,844.00	97,488.00
MONTHLY	6,366.00	6,684.00	7,018.00	7,369.00	7,737.00	8,124.00
BI-WEEKLY	2,938.15	3,084.92	3,239.08	3,401.08	3,570.92	3,749.54
HOURLY	36.7269	38.5615	40.4885	42.5135	44.6365	46.8692
Lgy Bonus 20	159.15	167.10	175.45	184.23	193.43	203.10
Lgy Bonus 25	318.30	334.20	350.90	368.45	386.85	406.20
Lgy Bonus 30	477.45	501.30	526.35	552.68	580.28	609.30

114

STEP	*1*	*2*	*3*	*4*	*5*	*6*
ANNUAL	78,300.00	82,212.00	86,328.00	90,648.00	95,184.00	99,948.00
MONTHLY	6,525.00	6,851.00	7,194.00	7,554.00	7,932.00	8,329.00
BI-WEEKLY	3,011.54	3,162.00	3,320.31	3,486.46	3,660.92	3,844.15
HOURLY	37.6442	39.5250	41.5038	43.5808	45.7615	48.0519
Lgy Bonus 20	163.13	171.28	179.85	188.85	198.30	208.23
Lgy Bonus 25	326.25	342.55	359.70	377.70	396.60	416.45
Lgy Bonus 30	489.38	513.83	539.55	566.55	594.90	624.68

115 Deputy City Clerk/Records Management Officer
115 Deputy City Treasurer
115 Human Resources Analyst
115 Risk Management Analyst

STEP	*1*	*2*	*3*	*4*	*5*	*6*
ANNUAL	80,256.00	84,264.00	88,476.00	92,904.00	97,548.00	102,420.00
MONTHLY	6,688.00	7,022.00	7,373.00	7,742.00	8,129.00	8,535.00
BI-WEEKLY	3,086.77	3,240.92	3,402.92	3,573.23	3,751.85	3,939.23
HOURLY	38.5846	40.5115	42.5365	44.6654	46.8981	49.2404
Lgy Bonus 20	167.20	175.55	184.33	193.55	203.23	213.38
Lgy Bonus 25	334.40	351.10	368.65	387.10	406.45	426.75
Lgy Bonus 30	501.60	526.65	552.98	580.65	609.68	640.13

116

STEP	*1*	*2*	*3*	*4*	*5*	*6*
ANNUAL	82,260.00	86,376.00	90,696.00	95,232.00	99,996.00	105,000.00
MONTHLY	6,855.00	7,198.00	7,558.00	7,936.00	8,333.00	8,750.00
BI-WEEKLY	3,163.85	3,322.15	3,488.31	3,662.77	3,846.00	4,038.46
HOURLY	39.5481	41.5269	43.6038	45.7846	48.0750	50.4808
Lgy Bonus 20	171.38	179.95	188.95	198.40	208.33	218.75
Lgy Bonus 25	342.75	359.90	377.90	396.80	416.65	437.50
Lgy Bonus 30	514.13	539.85	566.85	595.20	624.98	656.25

117 Transportation Operations Supervisor

STEP	*1*	*2*	*3*	*4*	*5*	*6*
ANNUAL	84,312.00	88,524.00	92,952.00	97,596.00	102,480.00	107,604.00
MONTHLY	7,026.00	7,377.00	7,746.00	8,133.00	8,540.00	8,967.00
BI-WEEKLY	3,242.77	3,404.77	3,575.08	3,753.69	3,941.54	4,138.62
HOURLY	40.5346	42.5596	44.6885	46.9212	49.2692	51.7327
Lgy Bonus 20	175.65	184.43	193.65	203.33	213.50	224.18
Lgy Bonus 25	351.30	368.85	387.30	406.65	427.00	448.35
Lgy Bonus 30	526.95	553.28	580.95	609.98	640.50	672.53

118 Administrative Management Analyst I

STEP	*1*	*2*	*3*	*4*	*5*	*6*
ANNUAL	86,424.00	90,744.00	95,280.00	100,044.00	105,048.00	110,304.00
MONTHLY	7,202.00	7,562.00	7,940.00	8,337.00	8,754.00	9,192.00
BI-WEEKLY	3,324.00	3,490.15	3,664.62	3,847.85	4,040.31	4,242.46
HOURLY	41.5500	43.6269	45.8077	48.0981	50.5038	53.0308
Lgy Bonus 20	180.05	189.05	198.50	208.43	218.85	229.80
Lgy Bonus 25	360.10	378.10	397.00	416.85	437.70	459.60
Lgy Bonus 30	540.15	567.15	595.50	625.28	656.55	689.40

119 Accountant/Cost Accountant
119 Fleet Maintenance Supervisor
119 Transit Administrative Supervisor
119 Transit Training and Safety Supervisor

STEP	*1*	*2*	*3*	*4*	*5*	*6*
ANNUAL	88,584.00	93,012.00	97,668.00	102,552.00	107,676.00	113,064.00
MONTHLY	7,382.00	7,751.00	8,139.00	8,546.00	8,973.00	9,422.00
BI-WEEKLY	3,407.08	3,577.38	3,756.46	3,944.31	4,141.38	4,348.62
HOURLY	42.5885	44.7173	46.9558	49.3038	51.7673	54.3577
Lgy Bonus 20	184.55	193.78	203.48	213.65	224.33	235.55
Lgy Bonus 25	369.10	387.55	406.95	427.30	448.65	471.10
Lgy Bonus 30	553.65	581.33	610.43	640.95	672.98	706.65

120 Administrative Management Analyst II
120 Executive Office Assistant

STEP	*1*	*2*	*3*	*4*	*5*	*6*
ANNUAL	90,804.00	95,340.00	100,104.00	105,108.00	110,364.00	115,884.00
MONTHLY	7,567.00	7,945.00	8,342.00	8,759.00	9,197.00	9,657.00
BI-WEEKLY	3,492.46	3,666.92	3,850.15	4,042.62	4,244.77	4,457.08
HOURLY	43.6558	45.8365	48.1269	50.5327	53.0596	55.7135
Lgy Bonus 20	189.18	198.63	208.55	218.98	229.93	241.43
Lgy Bonus 25	378.35	397.25	417.10	437.95	459.85	482.85
Lgy Bonus 30	567.53	595.88	625.65	656.93	689.78	724.28

121

STEP	*1*	*2*	*3*	*4*	*5*	*6*
ANNUAL	93,072.00	97,728.00	102,612.00	107,748.00	113,136.00	118,788.00
MONTHLY	7,756.00	8,144.00	8,551.00	8,979.00	9,428.00	9,899.00
BI-WEEKLY	3,579.69	3,758.77	3,946.62	4,144.15	4,351.38	4,568.77
HOURLY	44.7462	46.9846	49.3327	51.8019	54.3923	57.1096
Lgy Bonus 20	193.90	203.60	213.78	224.48	235.70	247.48
Lgy Bonus 25	387.80	407.20	427.55	448.95	471.40	494.95
Lgy Bonus 30	581.70	610.80	641.33	673.43	707.10	742.43

122 Facilities Maintenance Supervisor
122 Senior Human Resources Analyst
122 Senior Planner

STEP	*1*	*2*	*3*	*4*	*5*	*6*
ANNUAL	95,400.00	100,176.00	105,180.00	110,436.00	115,956.00	121,752.00
MONTHLY	7,950.00	8,348.00	8,765.00	9,203.00	9,663.00	10,146.00
BI-WEEKLY	3,669.23	3,852.92	4,045.38	4,247.54	4,459.85	4,682.77
HOURLY	45.8654	48.1615	50.5673	53.0942	55.7481	58.5346
Lgy Bonus 20	198.75	208.70	219.13	230.08	241.58	253.65
Lgy Bonus 25	397.50	417.40	438.25	460.15	483.15	507.30
Lgy Bonus 30	596.25	626.10	657.38	690.23	724.73	760.95

123

STEP	*1*	*2*	*3*	*4*	*5*	*6*
ANNUAL	97,788.00	102,672.00	107,808.00	113,196.00	118,860.00	124,800.00
MONTHLY	8,149.00	8,556.00	8,984.00	9,433.00	9,905.00	10,400.00
BI-WEEKLY	3,761.08	3,948.92	4,146.46	4,353.69	4,571.54	4,800.00
HOURLY	47.0135	49.3615	51.8308	54.4212	57.1442	60.0000
Lgy Bonus 20	203.73	213.90	224.60	235.83	247.63	260.00
Lgy Bonus 25	407.45	427.80	449.20	471.65	495.25	520.00
Lgy Bonus 30	611.18	641.70	673.80	707.48	742.88	780.00

124 Assistant Transit Operations Manager
124 Senior Administrative Analyst

STEP	*1*	*2*	*3*	*4*	*5*	*6*
ANNUAL	100,236.00	105,252.00	110,520.00	116,052.00	121,860.00	127,956.00
MONTHLY	8,353.00	8,771.00	9,210.00	9,671.00	10,155.00	10,663.00
BI-WEEKLY	3,855.23	4,048.15	4,250.77	4,463.54	4,686.92	4,921.38
HOURLY	48.1904	50.6019	53.1346	55.7942	58.5865	61.5173
Lgy Bonus 20	208.83	219.28	230.25	241.78	253.88	266.58
Lgy Bonus 25	417.65	438.55	460.50	483.55	507.75	533.15
Lgy Bonus 30	626.48	657.83	690.75	725.33	761.63	799.73

125 Public Information Officer

STEP	*1*	*2*	*3*	*4*	*5*	*6*
ANNUAL	102,744.00	107,880.00	113,280.00	118,944.00	124,896.00	131,136.00
MONTHLY	8,562.00	8,990.00	9,440.00	9,912.00	10,408.00	10,928.00
BI-WEEKLY	3,951.69	4,149.23	4,356.92	4,574.77	4,803.69	5,043.69
HOURLY	49.3962	51.8654	54.4615	57.1846	60.0462	63.0462
Lgy Bonus 20	214.05	224.75	236.00	247.80	260.20	273.20
Lgy Bonus 25	428.10	449.50	472.00	495.60	520.40	546.40
Lgy Bonus 30	642.15	674.25	708.00	743.40	780.60	819.60

126 Administrative Services Manager
126 Community Development Manager
126 Economic Development Manager
126 Family Child Care Manager
126 Recreation & Human Services Manager
126 Transportation Administrative Manager

STEP	*1*	*2*	*3*	*4*	*5*	*6*
ANNUAL	105,312.00	110,580.00	116,112.00	121,920.00	128,016.00	134,412.00
MONTHLY	8,776.00	9,215.00	9,676.00	10,160.00	10,668.00	11,201.00
BI-WEEKLY	4,050.46	4,253.08	4,465.85	4,689.23	4,923.69	5,169.69
HOURLY	50.6308	53.1635	55.8231	58.6154	61.5462	64.6212
Lgy Bonus 20	219.40	230.38	241.90	254.00	266.70	280.03
Lgy Bonus 25	438.80	460.75	483.80	508.00	533.40	560.05
Lgy Bonus 30	658.20	691.13	725.70	762.00	800.10	840.08

127

STEP	*1*	*2*	*3*	*4*	*5*	*6*
ANNUAL	107,940.00	113,340.00	119,004.00	124,956.00	131,208.00	137,772.00
MONTHLY	8,995.00	9,445.00	9,917.00	10,413.00	10,934.00	11,481.00
BI-WEEKLY	4,151.54	4,359.23	4,577.08	4,806.00	5,046.46	5,298.92
HOURLY	51.8942	54.4904	57.2135	60.0750	63.0808	66.2365
Lgy Bonus 20	224.88	236.13	247.93	260.33	273.35	287.03
Lgy Bonus 25	449.75	472.25	495.85	520.65	546.70	574.05
Lgy Bonus 30	674.63	708.38	743.78	780.98	820.05	861.08

128 Equipment Maintenance Superintendent
128 Finance and Administrative Services Manager
128 Financial Services Manager
128 Transit Maintenance Manager

STEP	*1*	*2*	*3*	*4*	*5*	*6*
ANNUAL	110,640.00	116,172.00	121,980.00	128,076.00	134,484.00	141,204.00
MONTHLY	9,220.00	9,681.00	10,165.00	10,673.00	11,207.00	11,767.00
BI-WEEKLY	4,255.38	4,468.15	4,691.54	4,926.00	5,172.46	5,430.92
HOURLY	53.1923	55.8519	58.6442	61.5750	64.6558	67.8865
Lgy Bonus 20	230.50	242.03	254.13	266.83	280.18	294.18
Lgy Bonus 25	461.00	484.05	508.25	533.65	560.35	588.35
Lgy Bonus 30	691.50	726.08	762.38	800.48	840.53	882.53

129

STEP	*1*	*2*	*3*	*4*	*5*	*6*
ANNUAL	113,412.00	119,088.00	125,040.00	131,292.00	137,856.00	144,744.00
MONTHLY	9,451.00	9,924.00	10,420.00	10,941.00	11,488.00	12,062.00
BI-WEEKLY	4,362.00	4,580.31	4,809.23	5,049.69	5,302.15	5,567.08
HOURLY	54.5250	57.2538	60.1154	63.1212	66.2769	69.5885
Lgy Bonus 20	236.28	248.10	260.50	273.53	287.20	301.55
Lgy Bonus 25	472.55	496.20	521.00	547.05	574.40	603.10
Lgy Bonus 30	708.83	744.30	781.50	820.58	861.60	904.65

130 Accounting/Finance Manager
130 Information Technology Manager
130 Park Maintenance Superintendent
130 Recreation Program Administrator
130 Street Maintenance Superintendent

STEP	*1*	*2*	*3*	*4*	*5*	*6*
ANNUAL	116,244.00	122,052.00	128,160.00	134,568.00	141,300.00	148,368.00
MONTHLY	9,687.00	10,171.00	10,680.00	11,214.00	11,775.00	12,364.00
BI-WEEKLY	4,470.92	4,694.31	4,929.23	5,175.69	5,434.62	5,706.46
HOURLY	55.8865	58.6788	61.6154	64.6962	67.9327	71.3308
Lgy Bonus 20	242.18	254.28	267.00	280.35	294.38	309.10
Lgy Bonus 25	484.35	508.55	534.00	560.70	588.75	618.20
Lgy Bonus 30	726.53	762.83	801.00	841.05	883.13	927.30

131 Plan Check Engineer
131 Transit Operations Manager

STEP	*1*	*2*	*3*	*4*	*5*	*6*
ANNUAL	119,148.00	125,100.00	131,352.00	137,916.00	144,816.00	152,052.00
MONTHLY	9,929.00	10,425.00	10,946.00	11,493.00	12,068.00	12,671.00
BI-WEEKLY	4,582.62	4,811.54	5,052.00	5,304.46	5,569.85	5,848.15
HOURLY	57.2827	60.1442	63.1500	66.3058	69.6231	73.1019
Lgy Bonus 20	248.23	260.63	273.65	287.33	301.70	316.78
Lgy Bonus 25	496.45	521.25	547.30	574.65	603.40	633.55
Lgy Bonus 30	744.68	781.88	820.95	861.98	905.10	950.33

132 FCC Therapist/Trainer II

STEP	*1*	*2*	*3*	*4*	*5*	*6*
ANNUAL	122,124.00	128,232.00	134,640.00	141,372.00	148,440.00	155,868.00
MONTHLY	10,177.00	10,686.00	11,220.00	11,781.00	12,370.00	12,989.00
BI-WEEKLY	4,697.08	4,932.00	5,178.46	5,437.38	5,709.23	5,994.92
HOURLY	58.7135	61.6500	64.7308	67.9673	71.3654	74.9365
Lgy Bonus 20	254.43	267.15	280.50	294.53	309.25	324.73
Lgy Bonus 25	508.85	534.30	561.00	589.05	618.50	649.45
Lgy Bonus 30	763.28	801.45	841.50	883.58	927.75	974.18

133 Human Resources Manager
133 Public Works Superintendent

STEP	*1*	*2*	*3*	*4*	*5*	*6*
ANNUAL	125,172.00	131,436.00	138,012.00	144,912.00	152,160.00	159,768.00
MONTHLY	10,431.00	10,953.00	11,501.00	12,076.00	12,680.00	13,314.00
BI-WEEKLY	4,814.31	5,055.23	5,308.15	5,573.54	5,852.31	6,144.92
HOURLY	60.1788	63.1904	66.3519	69.6692	73.1538	76.8115
Lgy Bonus 20	260.78	273.83	287.53	301.90	317.00	332.85
Lgy Bonus 25	521.55	547.65	575.05	603.80	634.00	665.70
Lgy Bonus 30	782.33	821.48	862.58	905.70	951.00	998.55

134 Assistant to the City Manager

STEP	*1*	*2*	*3*	*4*	*5*	*6*
ANNUAL	128,304.00	134,724.00	141,456.00	148,524.00	155,952.00	163,752.00
MONTHLY	10,692.00	11,227.00	11,788.00	12,377.00	12,996.00	13,646.00
BI-WEEKLY	4,934.77	5,181.69	5,440.62	5,712.46	5,998.15	6,298.15
HOURLY	61.6846	64.7712	68.0077	71.4058	74.9769	78.7269
Lgy Bonus 20	267.30	280.68	294.70	309.43	324.90	341.15
Lgy Bonus 25	534.60	561.35	589.40	618.85	649.80	682.30
Lgy Bonus 30	801.90	842.03	884.10	928.28	974.70	1023.45

135

STEP	*1*	*2*	*3*	*4*	*5*	*6*
ANNUAL	131,508.00	138,084.00	144,984.00	152,232.00	159,840.00	167,832.00
MONTHLY	10,959.00	11,507.00	12,082.00	12,686.00	13,320.00	13,986.00
BI-WEEKLY	5,058.00	5,310.92	5,576.31	5,855.08	6,147.69	6,455.08
HOURLY	63.2250	66.3865	69.7038	73.1885	76.8462	80.6885
Lgy Bonus 20	273.98	287.68	302.05	317.15	333.00	349.65
Lgy Bonus 25	547.95	575.35	604.10	634.30	666.00	699.30
Lgy Bonus 30	821.93	863.03	906.15	951.45	999.00	1048.95

136

STEP	*1*	*2*	*3*	*4*	*5*	*6*
ANNUAL	134,796.00	141,540.00	148,620.00	156,048.00	163,848.00	172,044.00
MONTHLY	11,233.00	11,795.00	12,385.00	13,004.00	13,654.00	14,337.00
BI-WEEKLY	5,184.46	5,443.85	5,716.15	6,001.85	6,301.85	6,617.08
HOURLY	64.8058	68.0481	71.4519	75.0231	78.7731	82.7135
Lgy Bonus 20	280.83	294.88	309.63	325.10	341.35	358.43
Lgy Bonus 25	561.65	589.75	619.25	650.20	682.70	716.85
Lgy Bonus 30	842.48	884.63	928.88	975.30	1024.05	1075.28

137

STEP	*1*	*2*	*3*	*4*	*5*	*6*
ANNUAL	138,168.00	145,080.00	152,340.00	159,960.00	167,964.00	176,364.00
MONTHLY	11,514.00	12,090.00	12,695.00	13,330.00	13,997.00	14,697.00
BI-WEEKLY	5,314.15	5,580.00	5,859.23	6,152.31	6,460.15	6,783.23
HOURLY	66.4269	69.7500	73.2404	76.9038	80.7519	84.7904
Lgy Bonus 20	287.85	302.25	317.38	333.25	349.93	367.43
Lgy Bonus 25	575.70	604.50	634.75	666.50	699.85	734.85
Lgy Bonus 30	863.55	906.75	952.13	999.75	1049.78	1102.28

138 Chief Fiscal Officer
138 Principal Civil Engineer
138 Transit Administrative Officer
138 Transit Operations Officer

STEP	*1*	*2*	*3*	*4*	*5*	*6*
ANNUAL	141,624.00	148,704.00	156,144.00	163,956.00	172,152.00	180,756.00
MONTHLY	11,802.00	12,392.00	13,012.00	13,663.00	14,346.00	15,063.00
BI-WEEKLY	5,447.08	5,719.38	6,005.54	6,306.00	6,621.23	6,952.15
HOURLY	68.0885	71.4923	75.0692	78.8250	82.7654	86.9019
Lgy Bonus 20	295.05	309.80	325.30	341.58	358.65	376.58
Lgy Bonus 25	590.10	619.60	650.60	683.15	717.30	753.15
Lgy Bonus 30	885.15	929.40	975.90	1024.73	1075.95	1129.73

139

STEP	*1*	*2*	*3*	*4*	*5*	*6*
ANNUAL	145,164.00	152,424.00	160,044.00	168,048.00	176,448.00	185,268.00
MONTHLY	12,097.00	12,702.00	13,337.00	14,004.00	14,704.00	15,439.00
BI-WEEKLY	5,583.23	5,862.46	6,155.54	6,463.38	6,786.46	7,125.69
HOURLY	69.7904	73.2808	76.9442	80.7923	84.8308	89.0712
Lgy Bonus 20	302.43	317.55	333.43	350.10	367.60	385.98
Lgy Bonus 25	604.85	635.10	666.85	700.20	735.20	771.95
Lgy Bonus 30	907.28	952.65	1000.28	1050.30	1102.80	1157.93

140

STEP	*1*	*2*	*3*	*4*	*5*	*6*
ANNUAL	148,788.00	156,228.00	164,040.00	172,248.00	180,864.00	189,912.00
MONTHLY	12,399.00	13,019.00	13,670.00	14,354.00	15,072.00	15,826.00
BI-WEEKLY	5,722.62	6,008.77	6,309.23	6,624.92	6,956.31	7,304.31
HOURLY	71.5327	75.1096	78.8654	82.8115	86.9538	91.3038
Lgy Bonus 20	309.98	325.48	341.75	358.85	376.80	395.65
Lgy Bonus 25	619.95	650.95	683.50	717.70	753.60	791.30
Lgy Bonus 30	929.93	976.43	1025.25	1076.55	1130.40	1186.95

141 Assistant Director of Transportation
141 Assistant Public Works Director/City Engineer

STEP	*1*	*2*	*3*	*4*	*5*	*6*
ANNUAL	152,508.00	160,128.00	168,132.00	176,544.00	185,376.00	194,640.00
MONTHLY	12,709.00	13,344.00	14,011.00	14,712.00	15,448.00	16,220.00
BI-WEEKLY	5,865.69	6,158.77	6,466.62	6,790.15	7,129.85	7,486.15
HOURLY	73.3212	76.9846	80.8327	84.8769	89.1231	93.5769
Lgy Bonus 20	317.73	333.60	350.28	367.80	386.20	405.50
Lgy Bonus 25	635.45	667.20	700.55	735.60	772.40	811.00
Lgy Bonus 30	953.18	1000.80	1050.83	1103.40	1158.60	1216.50

142

STEP	*1*	*2*	*3*	*4*	*5*	*6*
ANNUAL	156,324.00	164,136.00	172,344.00	180,960.00	190,008.00	199,512.00
MONTHLY	13,027.00	13,678.00	14,362.00	15,080.00	15,834.00	16,626.00
BI-WEEKLY	6,012.46	6,312.92	6,628.62	6,960.00	7,308.00	7,673.54
HOURLY	75.1558	78.9115	82.8577	87.0000	91.3500	95.9192
Lgy Bonus 20	325.68	341.95	359.05	377.00	395.85	415.65
Lgy Bonus 25	651.35	683.90	718.10	754.00	791.70	831.30
Lgy Bonus 30	977.03	1025.85	1077.15	1131.00	1187.55	1246.95

143

STEP	*1*	*2*	*3*	*4*	*5*	*6*
ANNUAL	160,236.00	168,252.00	176,664.00	185,496.00	194,772.00	204,516.00
MONTHLY	13,353.00	14,021.00	14,722.00	15,458.00	16,231.00	17,043.00
BI-WEEKLY	6,162.92	6,471.23	6,794.77	7,134.46	7,491.23	7,866.00
HOURLY	77.0365	80.8904	84.9346	89.1808	93.6404	98.3250
Lgy Bonus 20	333.83	350.53	368.05	386.45	405.78	426.08
Lgy Bonus 25	667.65	701.05	736.10	772.90	811.55	852.15
Lgy Bonus 30	1001.48	1051.58	1104.15	1159.35	1217.33	1278.23

144

STEP	*1*	*2*	*3*	*4*	*5*	*6*
ANNUAL	164,244.00	172,452.00	181,080.00	190,140.00	199,644.00	209,628.00
MONTHLY	13,687.00	14,371.00	15,090.00	15,845.00	16,637.00	17,469.00
BI-WEEKLY	6,317.08	6,632.77	6,964.62	7,313.08	7,678.62	8,062.62
HOURLY	78.9635	82.9096	87.0577	91.4135	95.9827	100.7827
Lgy Bonus 20	342.18	359.28	377.25	396.13	415.93	436.73
Lgy Bonus 25	684.35	718.55	754.50	792.25	831.85	873.45
Lgy Bonus 30	1026.53	1077.83	1131.75	1188.38	1247.78	1310.18

145

STEP	*1*	*2*	*3*	*4*	*5*	*6*
ANNUAL	168,348.00	176,760.00	185,604.00	194,880.00	204,624.00	214,860.00
MONTHLY	14,029.00	14,730.00	15,467.00	16,240.00	17,052.00	17,905.00
BI-WEEKLY	6,474.92	6,798.46	7,138.62	7,495.38	7,870.15	8,263.85
HOURLY	80.9365	84.9808	89.2327	93.6923	98.3769	103.2981
Lgy Bonus 20	350.73	368.25	386.68	406.00	426.30	447.63
Lgy Bonus 25	701.45	736.50	773.35	812.00	852.60	895.25
Lgy Bonus 30	1052.18	1104.75	1160.03	1218.00	1278.90	1342.88

146

STEP	*1*	*2*	*3*	*4*	*5*	*6*
ANNUAL	172,560.00	181,188.00	190,248.00	199,764.00	209,748.00	220,236.00
MONTHLY	14,380.00	15,099.00	15,854.00	16,647.00	17,479.00	18,353.00
BI-WEEKLY	6,636.92	6,968.77	7,317.23	7,683.23	8,067.23	8,470.62
HOURLY	82.9615	87.1096	91.4654	96.0404	100.8404	105.8827
Lgy Bonus 20	359.50	377.48	396.35	416.18	436.98	458.83
Lgy Bonus 25	719.00	754.95	792.70	832.35	873.95	917.65
Lgy Bonus 30	1078.50	1132.43	1189.05	1248.53	1310.93	1376.48

147

STEP	*1*	*2*	*3*	*4*	*5*	*6*
ANNUAL	176,880.00	185,724.00	195,012.00	204,768.00	215,004.00	225,756.00
MONTHLY	14,740.00	15,477.00	16,251.00	17,064.00	17,917.00	18,813.00
BI-WEEKLY	6,803.08	7,143.23	7,500.46	7,875.69	8,269.38	8,682.92
HOURLY	85.0385	89.2904	93.7558	98.4462	103.3673	108.5365
Lgy Bonus 20	368.50	386.93	406.28	426.60	447.93	470.33
Lgy Bonus 25	737.00	773.85	812.55	853.20	895.85	940.65
Lgy Bonus 30	1105.50	1160.78	1218.83	1279.80	1343.78	1410.98

148

STEP	*1*	*2*	*3*	*4*	*5*	*6*
ANNUAL	181,308.00	190,368.00	199,884.00	209,880.00	220,380.00	231,396.00
MONTHLY	15,109.00	15,864.00	16,657.00	17,490.00	18,365.00	19,283.00
BI-WEEKLY	6,973.38	7,321.85	7,687.85	8,072.31	8,476.15	8,899.85
HOURLY	87.1673	91.5231	96.0981	100.9038	105.9519	111.2481
Lgy Bonus 20	377.73	396.60	416.43	437.25	459.13	482.08
Lgy Bonus 25	755.45	793.20	832.85	874.50	918.25	964.15
Lgy Bonus 30	1133.18	1189.80	1249.28	1311.75	1377.38	1446.23

149

STEP	*1*	*2*	*3*	*4*	*5*	*6*
ANNUAL	185,844.00	195,132.00	204,888.00	215,136.00	225,888.00	237,180.00
MONTHLY	15,487.00	16,261.00	17,074.00	17,928.00	18,824.00	19,765.00
BI-WEEKLY	7,147.85	7,505.08	7,880.31	8,274.46	8,688.00	9,122.31
HOURLY	89.3481	93.8135	98.5038	103.4308	108.6000	114.0288
Lgy Bonus 20	387.18	406.53	426.85	448.20	470.60	494.13
Lgy Bonus 25	774.35	813.05	853.70	896.40	941.20	988.25
Lgy Bonus 30	1161.53	1219.58	1280.55	1344.60	1411.80	1482.38

150 Joint Powers Authority Accountant

STEP	*1*	*2*	*3*	*4*	*5*	*6*
ANNUAL	156,000.00					
MONTHLY	13,000.00					
BI-WEEKLY	6,000.00					
HOURLY	75.0000					

200 Police Trainee

STEP	*1*	*2*	*3*	*4*	*5*	*6*
ANNUAL	80,640.00	-	-	-	-	-
MONTHLY	6,720.00	-	-	-	-	-
BI-WEEKLY	3,101.54	-	-	-	-	-
HOURLY	38.7692	-	-	-	-	-

201 Police Officer

STEP	*1*	*2*	*3*	*4*	*5*	*6*
ANNUAL	94,872.00	99,600.00	104,592.00	109,812.00	115,320.00	121,080.00
MONTHLY	7,906.00	8,300.00	8,716.00	9,151.00	9,610.00	10,090.00
BI-WEEKLY	3,648.92	3,830.77	4,022.77	4,223.54	4,435.38	4,656.92
HOURLY	45.6115	47.8846	50.2846	52.7942	55.4423	58.2115
EDUCATIONAL INCENTIVE BONUS						
AA	1,303.96	1,303.96	1,303.96	1,303.96	1,303.96	1,303.96
BA	1,819.96	1,819.96	1,819.96	1,819.96	1,819.96	1,819.96
SPECIALIST	649.52	649.52	649.52	649.52	649.52	649.52
Lgy Bonus 7	365.00	365.00	365.00	365.00	365.00	365.00
Lgy Bonus 12	520.00	520.00	520.00	520.00	520.00	520.00
Lgy Bonus 20	915.30	935.00	955.80	977.55	1,000.50	1,024.50
Lgy Bonus 26	1,310.60	1,350.00	1,391.60	1,435.10	1,481.00	1,529.00

203 Police Sergeant

STEP	*1*	*2*	*3*	*4*	*5*	*6*
ANNUAL	121,128.00	127,188.00	133,536.00	140,220.00	147,240.00	154,596.00
MONTHLY	10,094.00	10,599.00	11,128.00	11,685.00	12,270.00	12,883.00
BI-WEEKLY	4,658.77	4,891.85	5,136.00	5,393.08	5,663.08	5,946.00
HOURLY	58.2346	61.1481	64.2000	67.4135	70.7885	74.3250
EDUCATIONAL INCENTIVE BONUS						
AA	1,612.53	1,612.53	1,612.53	1,612.53	1,612.53	1,612.53
BA	2,230.53	2,230.53	2,230.53	2,230.53	2,230.53	2,230.53
SPECIAL DUTY PAY	420.00	420.00	420.00	420.00	420.00	420.00
Lgy Bonus 7	326.00	326.00	326.00	326.00	326.00	326.00
Lgy Bonus 12	520.00	520.00	520.00	520.00	520.00	520.00
Lgy Bonus 20	1,024.70	1,049.95	1,076.40	1,104.25	1,133.50	1,164.15
Lgy Bonus 26	1,529.40	1,579.90	1,632.80	1,688.50	1,747.00	1,808.30

227 Police Lieutenant

STEP	*1*	*2*	*3*	*4*	*5*	*6*
ANNUAL	162,720.00	170,856.00	179,400.00	188,376.00	197,796.00	207,684.00
MONTHLY	13,560.00	14,238.00	14,950.00	15,698.00	16,483.00	17,307.00
BI-WEEKLY	6,258.46	6,571.38	6,900.00	7,245.23	7,607.54	7,987.85
HOURLY	78.2308	82.1423	86.2500	90.5654	95.0942	99.8481
EDUCATIONAL INCENTIVE BONUS						
BA	1,766.44	1,837.84	1,912.84	1,991.56	2,074.24	2,161.00
CA POST Mgmt. Cert.	678.00	711.90	747.50	784.90	824.15	865.35
Lgy Bonus 20	678.00	711.90	747.50	784.90	824.15	865.35
Lgy Bonus 26	1,356.00	1,423.80	1,495.00	1,569.80	1,648.30	1,730.70

231 Police Captain

STEP	*1*	*2*	*3*	*4*	*5*	*6*
ANNUAL	193,476.00	203,148.00	213,300.00	223,968.00	235,164.00	246,924.00
MONTHLY	16,123.00	16,929.00	17,775.00	18,664.00	19,597.00	20,577.00
BI-WEEKLY	7,441.38	7,813.38	8,203.85	8,614.15	9,044.77	9,497.08
HOURLY	93.0173	97.6673	102.5481	107.6769	113.0596	118.7135
EDUCATIONAL INCENTIVE BONUS						
BA	2,036.08	2,120.92	2,209.96	2,303.56	2,401.84	2,505.04
CA POST Mgmt. Cert.	806.15	846.45	888.75	933.20	979.85	1,028.85
Lgy Bonus 20	806.15	846.45	888.75	933.20	979.85	1,028.85
Lgy Bonus 26	1,612.30	1,692.90	1,777.50	1,866.40	1,959.70	2,057.70

232 Deputy Police Chief

STEP	*1*
ANNUAL	238,812.00
MONTHLY	19,901.00
BI-WEEKLY	9,185.08
HOURLY	114.8135
EDUCATIONAL INCENTIVE BONUS	
BA	2,588.12
CA POST Mgmt. Cert.	995.05
Lgy Bonus 20	995.05
Lgy Bonus 26	1,990.10

301 Mayor

STEP	*1*	*2*	*3*	*4*	*5*	*6*
ANNUAL	11,400.00					
MONTHLY	950.00					
BI-WEEKLY	438.46					
HOURLY	5.4808					

302 Councilmember

STEP	*1*	*2*	*3*	*4*	*5*	*6*
ANNUAL	7,800.00					
MONTHLY	650.00					
BI-WEEKLY	300.00					
HOURLY	3.7500					

303 City Clerk

STEP	*1*	*2*	*3*	*4*	*5*	*6*
ANNUAL	12,000.00					
MONTHLY	1,000.00					
BI-WEEKLY	461.54					
HOURLY	5.7692					

304 City Treasurer

STEP	*1*	*2*	*3*	*4*	*5*	*6*
ANNUAL	6,000.00					
MONTHLY	500.00					
BI-WEEKLY	230.77					
HOURLY	2.8846					

305 Youth Commissioner

STEP	*1*	*2*	*3*	*4*	*5*	*6*	
ANNUAL	300.00	-	-	-	-		-
MONTHLY	25.00	-	-	-	-		-
BI-WEEKLY	11.54	-	-	-	-		-
HOURLY	0.1442	-	-	-	-		-

306 Human Services Commissioner
306 Recreation Commissioner
306 Rent Mediation Board Member
306 Senior Citizens Commissioner

STEP	*1*	*2*	*3*	*4*	*5*	*6*	
ANNUAL	600.00	-	-	-	-		-
MONTHLY	50.00	-	-	-	-		-
BI-WEEKLY	23.08	-	-	-	-		-
HOURLY	0.2885	-	-	-	-		-

308 Planning Commissioner

STEP	*1*	*2*	*3*	*4*	*5*	*6*	
ANNUAL	1,200.00	-	-	-	-		-
MONTHLY	100.00	-	-	-	-		-
BI-WEEKLY	46.15	-	-	-	-		-
HOURLY	0.5769	-	-	-	-		-

330 Department Heads

STEP	*1*	*2*	*3*	*4*	*5*	*6*
ANNUAL	176,040.00	184,848.00	194,088.00	203,796.00	213,984.00	224,688.00
MONTHLY	14,670.00	15,404.00	16,174.00	16,983.00	17,832.00	18,724.00
BI-WEEKLY	6,770.77	7,109.54	7,464.92	7,838.31	8,230.15	8,641.85
HOURLY	84.6346	88.8692	93.3115	97.9788	102.8769	108.0231
Lgy Bonus 20	366.75	385.10	404.35	424.58	445.80	468.10
Lgy Bonus 25	733.50	770.20	808.70	849.15	891.60	936.20
Lgy Bonus 30	1100.25	1155.30	1213.05	1273.73	1337.40	1404.30

335 Deputy City Manager

STEP	*1*	*2*	*3*	*4*	*5*	*6*
ANNUAL	184,848.00	194,088.00	203,796.00	213,984.00	224,688.00	235,920.00
MONTHLY	15,404.00	16,174.00	16,983.00	17,832.00	18,724.00	19,660.00
BI-WEEKLY	7,109.54	7,464.92	7,838.31	8,230.15	8,641.85	9,073.85
HOURLY	88.8692	93.3115	97.9788	102.8769	108.0231	113.4231
Lgy Bonus 20	385.10	404.35	424.58	445.80	468.10	491.50
Lgy Bonus 25	770.20	808.70	849.15	891.60	936.20	983.00
Lgy Bonus 30	1155.30	1213.05	1273.73	1337.40	1404.30	1474.50

339 Assistant City Manager

STEP	*1*	*2*	*3*	*4*	*5*	*6*
ANNUAL	193,236.00	202,896.00	213,036.00	223,692.00	234,876.00	246,624.00
MONTHLY	16,103.00	16,908.00	17,753.00	18,641.00	19,573.00	20,552.00
BI-WEEKLY	7,432.15	7,803.69	8,193.69	8,603.54	9,033.69	9,485.54
HOURLY	92.9019	97.5462	102.4212	107.5442	112.9212	118.5692
Lgy Bonus 20	402.58	422.70	443.83	466.03	489.33	513.80
Lgy Bonus 25	805.15	845.40	887.65	932.05	978.65	1027.60
Lgy Bonus 30	1207.73	1268.10	1331.48	1398.08	1467.98	1541.40

340 Police Chief

STEP	*1*
ANNUAL	268,779.96
MONTHLY	22,398.33
BI-WEEKLY	10,337.69
HOURLY	129.2211
Edu Incentive Pay	2,887.80
CA POST Mgmt. Cert.	2,239.83
Lgy Bonus 26	2,239.83

350 City Manager

STEP	*1*
ANNUAL	311,548.00
MONTHLY	25,962.33
BI-WEEKLY	11,982.62
HOURLY	149.7827

RECREATION INSTRUCTOR

Job Summary

Recreation Instructors are responsible for planning, organizing, and conducting instructional lessons for classes in assigned recreation programs presented to adults and youth. Instructors for these programs teach or instruct a variety of activities which may include homework help, active games, music, dance, arts and crafts, fitness, cooking, and various other recreational, educational, and cultural enrichment areas. Develop course objectives and class plans, scheduling class times, obtaining necessary supplies, equipment, and resources. A high level of independent judgement is necessary.

Instructors include following areas, but we remain ***open to suggestions and presentations*** of other types of classes:

- Culinary
- Dance
- Fitness
- Floral Design
- Cake Decorating
- Arts & Crafts

Distinguishing Characteristics

Part-time, seasonal position conducting instructional lessons. The Recreation Instructor is a broad classification and encompasses various assignments with department flexibility to assign employees based on the meeting of wage qualifiers. Employees will be assigned utilizing a formula which incorporates the following characteristics:

Wage Qualifiers

An individual assigned to Recreation Instructor will be reviewed and placed according to the meeting of the below qualifiers. It is important to note the Recreation Instructor is subject to regular review upon initial placement and each time the same class/program is proposed/submitted/held, a new/revised class/program is submitted/held and/or to ensure the individual is meeting the noted qualifiers and placement to wage is or remains appropriate. Each class is looked at individually to determine a rate of pay, using a formula that is based on the following:

- Determined number of hours an instructor will need to work in a given class/program session;
- Determined charge/rate for class/program and use of that rate to assist in determining the instructor's rate of pay;
- The facility capacity to meet the minimum and maximum class/program size standards;
- Minimum and maximum required to teach a successful class/program;
- Minimum and maximum numbers to cover cost of said instructor's minimum rate; and
- Job performance will be evaluated and increased/decreased based on the instructor's evaluation and the number of participants enrolled.

Representative Duties

- Develops, plans, schedules, and conducts recreation classes in the specialized area in connection with the fee instruction program being offered to the public. Secures materials and equipment used for each class;
- Determines appropriate class sill and age levels necessary for participants to be successful and engaged to educate the participants;
- Prepares and conducts class instructional activities or general camp activities, prepares a course outline or schedule and a list of necessary course materials for class participants.

- Enforces site, classroom and department policies and rules;
- Assures proper maintenance of recreational facilities and equipment to ensure a safe and sanitary environment and notifies immediate supervisor of any problems and/or concerns.
- Sets up and cleans up facilities;
- Receives, stores and issues class equipment and supplies as needed;
- Monitors class participants throughout instruction, ensures adherence to safety practices and to department policies and procedures. Follow appropriate emergency procedures to protect the well-being of the participants;
- Responds to and resolves participant complaints and notifies supervisor when necessary;
- Completes required forms and activity records and reports;
- Communicates with parents of school age participants, as needed;
- Obtains and evaluates feedback regarding the effectiveness of the instructional process and the success of the program activity;
- Maintains a positive relationship with staff, co-workers, participants, and spectators;
- Provides excellent and proficient customer service to both internal and external customers;
- Communicates and acts in a professional manner with the public, co-workers, and work contacts;
- Regular attendance is an essential function of this job to ensure continuity;
- May be required to work early mornings, evenings, weekends and holidays as needed;
- Performs all work duties and activities in accordance with City policies and procedures; follows safety policies and practices, works in a safe manner, and reports unsafe activity and conditions;
- Performs related duties as assigned.

Organizational Responsibilities

This position reports directly to the Recreation Coordinator or Recreation Supervisor and general supervision of the Recreation and Human Services Director.

Incumbents will be assigned supervisory responsibilities over class participants.

QUALIFICATIONS GUIDE

Education and Experience

High school diploma or G.E.D. equivalent AND three (3) years' experience as a teacher, tutor, counselor, or coach in an organized recreational program or related field at the level of recreation assistant or recreation volunteer; OR a combination of the appropriate type and level of education and experience in the program area assigned.

Physical Demands and Working Conditions

Work is performed in an office environment and at indoor and outdoor facilities; Incumbents may be exposed to inclement weather conditions and loud noise; Duties require the ability to speak, hear, touch, and see; Acute hearing is required in providing customer service to public and/or assistance in facilities, classroom, or outdoors; This position requires near and far vision for reading written documents and in observation of participants during activities; Position requires incumbent to work and/or walk on various surfaces including slippery or uneven surfaces; Also required is the ability to exert a small amount of physical effort in sedentary to light work involving moving from one area to another; occasionally bending, twisting, turning, stooping, crouching, kneeling, reaching, grasping, pushing, pulling, and making repetitive hand movement in the performance of daily duties; May involve sitting or standing for prolonged periods of time; Incumbents may be required to lift, carry and/or push materials weighing 50 pounds or more; Requires sufficient hand/eye coordination to perform semi-skilled repetitive movements, such as typing on a keyboard, filing, data entry and/or use of a personal computer or other office equipment and supplies; Finger dexterity is needed to access, enter, and

retrieve data using a computer keyboard, typewriter, or calculator; Must have the ability to operate a motor vehicle to travel to different sites and locations. Available to work varied shifts, including evenings, early mornings, weekends, and holidays.

License

Must possess a valid Class C California Driver's License and must be maintained throughout the course of employment. City employees are registered with the Department of Motor Vehicles, Employee Pull Notice Program.

Special Conditions/Requirements

- First Aid/CPR/AED certificate
- Certified programs require a Certificate and/or Authorization Trademark use (ex: Pilates, Zumba, Red Cross, etc.

DEPUTY CITY MANAGER

(Job Description)

Description

Under direction of the City Manager, the Deputy City Manager will be responsible to lead and manage a current City Department; lead and assist in the development of City programs and policies; approve and advance special projects requiring collaboration with staff at all levels within the City; and serve as acting City Manager as required.

Representative Duties

- Serve as project manager for special projects and coordinate interdepartmental efforts for achieving the City Council's policy directions and strategic goals;
- Work collaboratively with the City Manager, Department Directors, Managers and City Council to promote and measure progress towards the City's strategic goals;
- Play a leadership and interdepartmental coordinating role and serve as the project manager for internal and external facing City strategic goals;
- Prepare special studies and reports relating to any phase of municipal government operation;
- Will direct, plan, maintain, and oversee the operations, staffing, budget, and planning of a City Department;
- Serve as Acting City Manager when the City Manager is unavailable;
- Attend and participate in professional group meetings; maintain awareness of new trends and developments in the field of public administration; incorporate new developments as appropriate.

Qualifications

Graduation from an accredited college or university with a Bachelor's degree in Public or Business Administration or a related field. Seven (7) years of progressively responsible professional experience in municipal administration.
A Master's degree in Public or Business Administration or a related field is desirable and may be substituted for one year of experience.

Knowledge of:

- Thorough knowledge of the principals and practices of public administration and local government;
- Applicable Federal, State, and local laws, rules and regulations;
- Working knowledge of all local government operations and budgeting;
- Project management techniques and procedures;
- Internal and external facing strategic program development, implementation and policymaker/community engagement;
- Principles and practices of supervision and professional development

Ability to:

- Deal effectively with all City officials, Department directors, Legislative Officials/Staff and the general public;
- Manage multiple and complex projects and initiatives related to the City's strategic goals;
- Communicate effectively, both orally and in writing;
- Facilitate interdepartmental projects and initiatives;
- Coordinate policy analysis, research, and outreach related to City projects and programs;
- Establish and maintain cooperative working relationships with all City staff and elected officials;
- Provide thoughtful, responsive and timely service to internal and external customers;
- Provide effective leadership

Physical Demands and Working Conditions

Work is performed primarily in a standard office setting with frequent interruptions, also some travel to different sites; incumbent may be required to work extended hours including evenings, weekends, and holidays.

Primary functions require sufficient physical ability and mobility to work in an office setting; to stand or sit for prolonged periods of time; to occasionally stoop, bend, kneel, crouch, reach and twist; to lift, carry, push and/or pull light to moderate amounts of weight; to operate office equipment requiring repetitive hand movement and fine coordination including use of a computer keyboard; and to verbally communicate to exchange information.

License
Must have and maintain a valid California Class C Driver's License.

Special Conditions
At-Will Appointment
Conflict of Interest Statement

City of Gardena

Gardena City Council Meeting

AGENDA REPORT SUMMARY

Agenda Item No. 8.H
Section: CONSENT CALENDAR
Meeting Date: December 12, 2023

TO: THE HONORABLE MAYOR AND MEMBERS OF THE GARDENA CITY COUNCIL

AGENDA TITLE: SECOND READING AND ADOPTION OF ORDINANCE NO. 1859 , Amending Section 2.66.090 (Compensation) of Chapter 2.66 (Gardena Economic Business Advisory Commission) and Section 2.68.110 (Compensation) of Chapter 2.68 (Gardena Beautification Commission) of Title 2 (Administration and Personnel) of the Gardena Municipal Code

CONTACT: CITY MANAGER

COUNCIL ACTION REQUIRED:

RECOMMENDATION AND STAFF SUMMARY:

During the October 10, 2023, City Council meeting, a directive was given to staff by Councilwoman Francis and seconded by Councilmember Love for staff to prepare an Ordinance to allow for the Gardena Economic Business Advisory Commission (GEBAC) and Gardena Beautification Commission to receive compensation similar to other City Commissions.

Currently, members of the Human Services, Recreation and Parks, and Senior Citizens Commissions as well as Rent Mediation Board are compensated $50.00 per month, if in attendance at their regularly scheduled monthly meeting. Members of the Youth Commission are compensated $25.00 per month if in attendance at their regularly scheduled monthly meeting and members of the Planning Commission are compensated $50.00 per regularly scheduled meeting attended. Members of all the previously mentioned Commissions/Boards may also be reimbursed for any reasonable and necessary expenses incurred by them in their performance of Commission duties, provided such expenses have been authorized in the City Council's adopted budget.

As it pertains to GEBAC, proposed Ordinance No. 1859 amends the Gardena Municipal Code to allow for members of GEBAC to be compensated in an amount established by resolution of the council. Resolution No. 6646 would establish that members of GEBAC are compensated $50.00 per month, if in attendance at their regularly scheduled monthly meeting. GEBAC members may also be reimbursed for any reasonable and necessary expenses incurred by them in their performance of Commission duties, provided such expenses have been authorized in the City Council's adopted budget.

With regards to Gardena Beautification Commission, proposed Ordinance No. 1859 amends the Gardena Municipal Code to allow for members of Gardena Beautification Commission, with the exception of any member of the Gardena City Council, to be compensated in an amount established by resolution of the council. Pursuant to Government Code Section 36516 unless specifically authorized by state law, a city council may not enact an ordinance to pay itself a salary for serving on other boards and commissions. Because there is no state law that allows for the Gardena City Council to pay itself to serve on the Gardena Beautification Commission, no compensation may be received by any councilmember that is a member of the Gardena Beautification Commission. Resolution No. 6646 would establish that members of the Gardena Beautification Commission are compensated $50.00 per month, if in attendance at their regularly scheduled monthly meeting, with the exception of any member of the Gardena City Council. Gardena Beautification Commission members may also be reimbursed for any reasonable and necessary expenses incurred by them in their performance of Commission duties, provided such expenses have been authorized in the City Council's adopted budget.

Ordinance No. 1859 was introduced at the November 14, 2023, City Council meeting by Mayor Pro Tem Henderson.

Staff respectfully recommends that the City Council Adopt Ordinance No. 1859.

FINANCIAL IMPACT/COST:

Gardena Economic Business Advisory Commission: $3,300 per year from General Fund.
Gardena Beautification Commission: $4,800 per year from General Fund.

ATTACHMENTS:

ORDINANCE No. 1859.rtf.pdf

APPROVED:



_____

Clint Osorio, City Manager

DocuSign Envelope ID: B8EBFA9E-93AC-482C-AB81-25A8AD455541

ORDINANCE NO. 1859

AN ORDINANCE OF THE CITY COUNCIL OF THE CITY OF GARDENA, CALIFORNIA, AMENDING SECTION 2.66.090 (COMPENSATION) OF CHAPTER 2.66 (GARDENA ECONOMIC BUSINESS ADVISORY COMMISSION) AND SECTION 2.68.110 (COMPENSATION) OF CHAPTER 2.68 (GARDENA BEAUTIFICATION COMMISSION) OF TITLE 2 (ADMINISTRATION AND PERSONNEL) OF THE GARDENA MUNICIPAL CODE

THE CITY COUNCIL OF THE CITY OF GARDENA, CALIFORNIA, DOES HEREBY ORDAIN, AS FOLLOWS:

SECTION 1. Section 2.66.90 of the Gardena Municipal Code is amended to read, as follows:

2.66.090 Compensation.

The members of the Gardena Economic Business Advisory Commission shall be compensated in an amount established by resolution of the council. ~~Members of the GEBAC shall receive no compensation. However, the members shall be reimbursed for any expense incurred in the performance of their duties.~~

SECTION 2. Section 2.68.110 of the Gardena Municipal Code is amended to read, as follows:

2.68.110 Compensation.

The members of the Gardena Beautification Commission shall be compensated in an amount established by resolution of the council; however, no member of the Gardena City Council shall be compensated for serving on the Gardena Beautification Commission. ~~Members of the Gardena beautification commission shall receive no compensation. However, the members shall be reimbursed for any expense incurred in the performance of their duties.~~

SECTION 3. Severability. If any section, subsection, subdivision, paragraph, sentence, clause or phrase of this ordinance, or any part thereof is for any reason held to be unconstitutional, such decision shall not affect the validity of the remaining portion of this ordinance or any part thereof. The City Council hereby declares that it would have passed each section, subsection, subdivision, paragraph, sentence, clause or phrase thereof, irrespective of the fact that any one or more section, subsection, subdivision, paragraph, sentence, clause or phrase be declared unconstitutional.

DocuSign Envelope ID: B8EBFA9E-93AC-482C-AB81-25A8AD455541

SECTION 4. Certification. The City Clerk shall certify the passage of this ordinance and shall cause the same to be entered in the book of original ordinances of said City; shall make a minute passage and adoption thereof in the records of the meeting at which time the same is passed and adopted; and shall, within fifteen (15) days after the passage and adoption thereof, cause the same to be published as required by law, in a publication of general circulation.

SECTION 5. Effective Date. This ordinance shall not become effective or be in force until thirty (30) days from and after the date of its adoption.

Passed, approved, and adopted this_____day of _____, 2023.

_____
TASHA CERDA, Mayor

ATTEST:

_____
MINA SEMENZA, City Clerk

APPROVED AS TO FORM:

_____
CARMEN VASQUEZ, City Attorney

City of Gardena

Gardena City Council Meeting

AGENDA REPORT SUMMARY

Agenda Item No. 8.I
Section: CONSENT CALENDAR
Meeting Date: December 12, 2023

TO: THE HONORABLE MAYOR AND MEMBERS OF THE GARDENA CITY COUNCIL

AGENDA TITLE: Acceptance and Notice of Completion for the Traffic Detour and Temporary Pavement for UPRR Improvements Phase of the Artesia Boulevard Arterial Improvement Project from Western Avenue to Vermont Avenue, JN 935.
CONTACT: PUBLIC WORKS

COUNCIL ACTION REQUIRED:

RECOMMENDATION AND STAFF SUMMARY:

Staff respectfully recommends that the City Council accept the work performed by Ruiz Concrete and Paving, Inc. (RCPI) and order the recordation of the Notice of Completion for the Traffic Detour and Temporary Pavement for UPRR Improvements Phase of the Artesia Boulevard Arterial Improvement Project from Western Avenue to Vermont Avenue, JN 935.

This project implemented a traffic detour plan during the Railroad rehabilitation work and paved the adjacent roadway to allow for a transition to the modified railroad tracks.

Sufficient funds to complete this project were appropriated by the Council during the Fiscal Year 2022-2023 Capital Improvement Budget.

FINANCIAL IMPACT/COST:
Amount of Expense: $191,162.50

Source of Funds: Project Budget: $2,523,000 (Measure R Highway) and $1,650,000 (Prop C).

ATTACHMENTS:
NOC__UPRRRehabPavingPH1_JN935.pdf

APPROVED:



_____
Clint Osorio, City Manager

RECORDING REQUEST BY AND MAIL TO:

Mina Semenza, City Clerk
City of Gardena
1700 W. 162nd Street
Gardena, CA 90247

SPACE ABOVE THIS LINE RESERVED FOR RECORDER'S USE

NOTICE OF COMPLETION

NOTICE IS HEREBY GIVEN, that:

1. The undersigned is the duly authorized representative of the City of Gardena, a Municipal Corporation of the State of California located within the County of Los Angeles in said State at 1700 West 162 Street, Gardena, California 90247.
2. That on the 3 day of April 2023 the City Council of said City entered into contract with Ruiz Concrete and Paving, Inc. whose address is 344 Temple Ave., Long Beach, CA 90804 for the improvement titled JN 935 Phase1 - UPRR Railroad Rehabilitation and Paving in accordance with City of Gardena Plans and Specifications.
3. That all of the work and improvement was located at Artesia Blvd. Railroad Crossing in said City. The owner of the location is the City of Gardena.
4. That all of the work and improvement contemplated in and under said contract was substantially completed on Oct 16, 2023 .
5. That the City Council formally accepted this work and improvement on December 12, 2023 .

The undersigned, being first duly sworn, states: That he is the duly authorized representative of the City of Gardena, the political subdivision of the State of California which conducted the proceedings for the improvement titled JN 935 Phase1 - UPRR Railroad Rehabilitation and Paving in said City, that he has read the foregoing "Notice of Completion" and knows the facts recited therein are true.

IN WITNESS THEREOF, I have hereunto subscribed my name as the duly authorized representative of said City this _____ day of _____ 2023.

City of Gardena

_____
William Mendoza

City of Gardena

Gardena City Council Meeting

AGENDA REPORT SUMMARY

Agenda Item No. 8.J
Section: CONSENT CALENDAR
Meeting Date: December 12, 2023

TO: THE HONORABLE MAYOR AND MEMBERS OF THE GARDENA CITY COUNCIL

AGENDA TITLE: Approve Purchase of Mobile Bus Chargers for $157,914 and Authorize a Program Total of $173,705
CONTACT: TRANSPORTATION

COUNCIL ACTION REQUIRED:

RECOMMENDATION AND STAFF SUMMARY:
In March of 2022, City Council approved the purchase of seven zero-emission, battery electric buses which are scheduled to arrive in early 2024. In November 2023, Council also approved the purchase of seven depot chargers which will be a part of the overall electric charging, solar and battery storage project that is currently in the design phase.

In order to provide temporary charging while the charging infrastructure is being constructed, GTrans wishes to purchase three mobile chargers. These mobile chargers will also be used in our maintenance bays to charge electric buses and vehicles as needed during routine repairs or preventative maintenance, as well as for a general backup. GTrans has selected the Heliox 50kW charger as the best option for our operation. This particular unit is used by a multitude of transit agencies across the US, including at LA Metro. The chargers can be used for our buses, vans and our electric service vehicles. While not intended to serve as a replacement for depot fast charging for buses in regular service, these mobile chargers will allow us to immediately deploy and rotate our new electric buses in service until the charging station is ready for operation, in early 2025.

These Buy America compliant Heliox 50kW chargers are available through the State of Virginia Cooperative from Gillig, at a cost of $47,200 per charger for a total of $157,914, inclusive of freight and sales tax. The mobile chargers will come with CCS-1 connectors and a two-year warranty. The FTA encourages grant recipients to procure goods and services jointly with other recipients or participate in purchasing cooperatives to obtain better pricing through volume purchases. The chargers are available now, and will be ready to use with the electric buses arriving in early 2024. GTrans also wishes to include a 10 percent contingency, or $15,791, to account for any unforeseen changes, only to be approved in advance by GTrans staff.

Therefore staff recommends that Council authorize GTrans to purchase Heliox 50kW

chargers, related components, two-year warranty from Gillig for a total $157,914, and a program total of $173,705 which includes a 10 percent contingency. Staff also recommends authorizing the City Manager, or his designee to sign any subsequent documents required by the purchase.

FINANCIAL IMPACT/COST:

GTrans has local, state and federal capital funds available and designated for the purchase of these chargers, and included in FY24 capital budget previously approved by the City Council. There is no impact to the General Fund.

ATTACHMENTS:

Gardena, CA (Heliox, 50kW, 120123RZ2).pdf
Heliox Mobile 50 UL Leaflet - Digital.pdf
Commonwealth of Virginia Letter to GTrans.pdf

APPROVED:



_____

Clint Osorio, City Manager

GILLIG

CHARGER EQUIPMENT

December 1, 2023

Dana Pynn
Transit Administrative Officer
City of Gardena GTrans
13999 S. Western Avenue
Gardena, CA 90249

NOTE: Purchasing via State of Virginia Contract; Contract Code CTR010076 for IFB #6447

Dear Dana,

GILLIG is pleased to submit the following pricing for Heliox equipment and associated services for use with your GILLIG Battery Electric buses. This pricing has been assembled in coordination with Heliox and represents our proposed equipment options based on the scoping information you have provided to date.

Charging Equipment	**Quantity**	**Unit Price**	**Total**
Hardware			
Heliox 50kW Charger SP • CCS-1 Connector • FTA Buy-America Compliant	3	47,200	141,600
Warranty			
Standard 2 Year Warranty		Included	Included
Software			
Services & Other			
Estimated Freight		1,800	1,800
		Hardware	**$141,600**
		Warranty	**$0**
		Software	**$0**
		Services & Other	**$0**
		Freight	**$1,800**
		Estimated Sales Tax	**$14,514**
		GRAND TOTAL	**$157,914**

The availability of charging equipment may be affected by production lead times, completion of independent safety certifications, and design development. GILLIG does not guarantee the availability of charging equipment.

GILLIG makes no warranty of any kind whatsoever, expressed, or implied; and all implied warranties of merchantability and fitness for a particular purpose which exceed the aforesaid obligation are hereby disclaimed by GILLIG and excluded from any agreement.

Payment to GILLIG is due upon shipment of the equipment described herein.

Quote is valid for 30 days unless extended by an authorized GILLIG representative.

Prepared By: Ryan Zulewski

Mobile 50 kW

Simple. Durable. Portable.

With durable and portable design, the Heliox Mobile DC charger is built with the daily activities of service and maintenance personnel in mind. And with no fixed installation required, you'll save thousands on infrastructure costs as well.



Manufactured and tested in the United States ensuring Buy America Act compliance.

Perfect for getting started with EV or scaling up. Simply connect to a 480V AC wall socket and start charging.

With a compact design and no fixed installation, Mobile 50 can be moved to charge anywhere it can be plugged in.

All product designs and specifications are subject to change without notice

Mobile 50 kW

Durable: A strong metal casing and wheel system means Mobile 50 kW stands up to daily wear and tear in ways other portable chargers simply cannot. And with a NEMA 3R rated enclosure, Mobile can be safely operated both indoors and outside.

Future-proof: The Mobile 50 kW is the perfect EV charging companion, now and in the future. No matter what direction your business is headed, this charger will always be by your side, providing reliable charging when and where you need it.

96.2%
Efficiency

General

Charging standard:	SAE J1772 (CCS type-1)
Communication standard:	DIN70121 / ISO15118-1/2/3
Compliance and safety:	UL 2202 / UL 2231
Power factor above 50% rated:	>0.98
Peak efficiency:	96.2%
Dielectric withstand:	3000 V
Network cellular:	4G modem
Back office:	OCPP 1.6J
Temperature range:	-4 to 104 °F
Operational noise level:	<55 dB(A) @ 40"
System weight:	270 lbs.
Dimensions:	H: 36", W: 20", D 20"
Protection	NEMA 3R
Environment operating:	ISO 12944: C4 H

Input

Input connections, Frequency:	3P + G, 47-63 Hz
Input current limit values:	15 A / 25 A / Max. (user selected)
Full load / idle input power:	54 kVA / 15 VA
Input line-line voltage range:	480 V AC +/- 10%, 60 Hz
Input max. AC phase current:	65 A, inrush current limited

Output

Output DC voltage range:	100 - 1000 V
Rated DC output power:	50 kW
Output power limits:	11 kW (@ 15 A AC input current) 19 kW (@ 25 A AC input current) 50 kW (@ Max. input current)
Maximum DC output current:	80 A

One charger, three settings

Raise or lower your charger input with the turn of a dial, enabling you to activate sessions in situations where power supply may be limited.



Actual power maybe impacted due to vehicle parameters

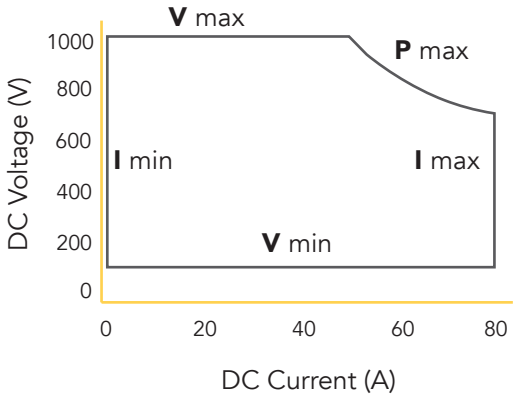

heliox

www.heliox-energy.com
info@heliox-energy.com

COMMONWEALTH of VIRGINIA

Department of General Services
Division of Purchases and Supply

J. Peter Stamps, CPPO, VCM, VCO
Director

Kelly J. Langley, CPPO, CPPB, VCM, VCO
Deputy Director

P. O. Box 1199
Richmond, VA 23218-1199
Voice: (804) 786-3842

December 4, 2023

Rachel Yoo
Transit Administrative Supervisor
City of Gardena GTrans
13999 S. Western Ave
Gardena, CA 90249

Reference: CTR010076 Vehicle Low Floor Transit Buses, Commuter Coach Buses, and Trolleys, Heavy Duty, 12 Year (29 ft. – 60 ft. sizes) – Gillig LLC

The Commonwealth of Virginia's contract CTR010076 with Gillig LLC, was competitively bid and awarded. The provisions for authorization and consent for GTrans, City of Gardena to utilize is incorporated by reference. Public bodies outside of the Commonwealth of Virginia are not required to obtain approval or acknowledgement from the Commonwealth of Virginia to referenced contract.

Pamela Copeland

Pamela Copeland, VCO, VCARM
Statewide Sourcing and Contracting Officer
Department of General Services
Division of Purchases and Supply
1111 East Broad Street
Patrick Henry Bldg., 6th Floor
Richmond VA 23219
804-786-4068

NOTICE OF CANCELLATION

City of Gardena

Planning & Environmental Quality Commission

Notice is hereby given that the tonight's meeting of the Planning & Environmental Quality Commission scheduled for November 21, 2023,
has been canceled.

The item on tonight's agenda for the property at 14600 S Western Avenue, will be re-noticed at a later time.

The next regularly scheduled meeting will be held on December 5, 2023, at 7 p.m.

Affidavit of Posting:
STATE OF CALIFORNIA
CITY OF GARDENA
COUNTY OF LOS ANGELES

I DECLARE UNDER PENALTY OF PERJURY that I, Amanda Acuna, am employed by the City of Gardena, in the Community Development Department; and that I posted this notice on the doors leading into the City Council Chambers, on the front and side entrances of City Hall, 1700 W 162nd Street, Gardena, CA 90247.

Dated: November 21, 2023
Signed: Amanda Acuna

PLANNING AND ENVIRONMENTAL QUALITY COMMISSION

Regular PEQC Meeting Notice and Agenda

Website: www.cityofgardena.org

Tuesday, December 5, 2023 – 7:00 PM

1700 W. 162nd Street, Gardena, California

REPORT OF ACTIONS

6. OTHER BUSINESS

6.A **GENERAL PLAN CONFORMITY #2-23**

General Plan Conformity Determination for the Purchase of Two Parcels Totaling Approximately 19,200 sf Located at 1112 W. Gardena Blvd. (APNs: 6111-004-032, 033)

PC Conformance Report-1112 Gardena Blvd.pdf

PC Resolution No. 21-23 1112 Gardena.pdf

Commission Action: The Planning Commission approved Resolution No. PC 21-23, by a vote of 5-0, setting forth the Commission's General Plan conformity report in accordance with Government Code section 6540.2.

6.B **GENERAL PAN CONFORMITY #3-23**

General Plan Conformity Determination for the Purchase of a Parcel Totaling Approximately 5,500 sf Located at 15016 Nader Place, also known as 15016 Daphne Ave (APNs: 4064-023-024)

PC Conformance Report-Nader's Place.pdf

PC Resolution No. 22-23 15016 Naders Place.pdf

Commission Action: The Planning Commission approved Resolution No. PC 22-23, by a vote of 5-0, setting forth the Commission's General Plan conformity report in accordance with Government Code section 6540.2.

PUBLIC COMMENT #1
UNDER: ORAL COMMUNICATION

CITY CLERK'S OFC
'23 NOV29AM 8:40

From: jonathan hawes
To: Public Comment
Subject: General public comment to be read at the next city council meeting
Date: Wednesday, November 29, 2023 7:35:46 AM

Caution! This message was sent from outside your organization.

Good evening. My name is Jonathan Hawes. I served as El Monte City Clerk from 2013 to 2018. Since 2015 I have been a whistleblower on Andre Quintero and Team El Monte's embezzlement of $10 million from the El Monte Promise Foundation scholarship fund. I have interviewed dozens of El Monte residents who have privately confirmed that Promise funds were used for fraudulent trips to Vietnam and Haiti, a bogus consultant in Salt Lake City, house repairs, and other unlawful expenditures. I have myself been interviewed by the FBI about two dozen times. Documents proving the embezzlement have been submitted to the FBI and the Los Angeles County District Attorney's Office.

A week ago, an El Monte resident with a documented history of harassing and fabricating lies about other residents, Gabby Leos, told a string of lies on cable news about El Monte Mayor Jessica Ancona. These lies were spoon-fed to her by City Manager Alma Martinez. El Monte Police Chief Jake Fisher, who went on record confirming one of Leos/Martinez's lies, needs to be fired for interfering in ongoing litigation by commenting publicly on said litigation, and for lying in his official capacity. Both Martinez and Fisher dislike Mayor Ancona due to her efforts to rid our city of the baleful influence of Andre Quintero and his Team El Monte minions, of which Martinez and Fisher are two. Martinez and Fisher have frequently made significant decisions without a vote from the council, which is unlawful, and Ancona has called out such improprieties, furthering their animosity towards her and her anti-corruption efforts.

I am asking the Gardena City Council to pass a resolution condemning these crimes and schemes in order to protect the greatest mayor El Monte has ever had, Mayor Jessica Ancona, and the vulnerable residents of one of the poorest cities in Southern California. If this criminal, FBI-investigated cabal succeeds in removing her from office via well-orchestrated, mendacious smear campaigns, we will be back to full dictatorship under Andre Quintero or one of his puppets. El Monte children, who should've been provided with college scholarships, were robbed by his embezzlement. Andre Quintero and Team El Monte members must go to prison. If you have any questions, please call or text me at [redacted]. Thank you.

City of Gardena

Gardena City Council Meeting

AGENDA REPORT SUMMARY

Agenda Item No. 12.A
Section: DEPARTMENTAL ITEMS - ADMINISTRATIVE SERVICES
Meeting Date: December 12, 2023

TO: THE HONORABLE MAYOR AND MEMBERS OF THE GARDENA CITY COUNCIL

AGENDA TITLE: Approve Citywide Classification and Total Compensation Study Contract with Gallagher Benefit Services, Incorporated (Doing Business as Koff & Associates) in the amount of $205,940 and a project total of $236,831

COUNCIL ACTION REQUIRED:
Staff Recommendation: Approve Proposal

RECOMMENDATION AND STAFF SUMMARY:
In 2019, the City launched a citywide classification study with Koff & Associates, to develop an updated and well-structured classification system that is legally compliant, internally aligned, and reflective of current roles and responsibilities, duties and qualifications.

The COVID-19 Pandemic struck mid-study in 2020, impacting employment levels and service levels, by way of layoffs and furloughs. The study came to a halt.

The City is once again undertaking this project, as job descriptions serve as an essential tool for the City to effectively manage its workforce. Job descriptions lay the framework for developing effective recruitment and selection procedures, conducting objective performance appraisals, designing training plans and succession planning, and providing employees an understanding of their role within the City. With the passing of time, positions evolve and require assessment of current responsibilities and qualifications. These changes can be due to a number of items, including organizational changes, legal requirements and technological advancements.

The City has worked with Koff & Associates to analyze their prior work performed, in order to salvage and utilize any of the work that may still be relevant. In addition to the Classification study portion of job descriptions, the City has added a second and equally important component, a Total Compensation Study. In order to attract and retain a qualified and talented workforce, it is important to maintain parity in the labor market. This study will evaluate pay as well as benefits in one comprehensive package to show how competitive the City is compared to the median market.

A 15% contingency is being requested for this project for an additional $30,891, to accommodate any unforeseen expenditures that may arise during this complex project. Such

expenditures would not be allowed unless agreed upon and approved in advance by the City. The total project is estimated to be completed in 32 weeks

Therefore, staff respectfully recommends that the City Council approve the Classification and Total Compensation Study with Koff & Associates, in the amount of $205,940 with a project total of $236,831, which includes a 15% contingency.

FINANCIAL IMPACT/COST:

Fund Type	FY 2023-2024	FY 2024-2025	Total
General Fund	$140,288	$46,763	$187,050
Gtrans Fund	$35,229	$11,743	$46,972
Sewer Fund	$2,106	$702	$2,809
Total	$177,623	$59,208	$236,831

ATTACHMENTS:

12-12-23-Gallagher Benefit Services Inc- Contract Agreement.pdf

APPROVED:



_____

Clint Osorio, City Manager

DocuSign Envelope ID: C702B174-42AA-462D-A780-FF4EF1C0B64F

AGREEMENT BETWEEN
THE CITY OF GARDENA
AND
GALLAGHER BENEFIT SERVICES, INC.

This contract, hereinafter referred to as Agreement is entered into this 1st day of December, 2023, by and between THE CITY OF GARDENA ("City") and Gallagher Benefit Services, Inc., a Delaware Corporation ("Consultant"). Based on the mutual promises and covenants contained herein, the Parties hereto agree, as follows.

1. Recitals.

A. Whereas, City requires the services of a professional to complete a citywide classification and compensation study; and

B. Whereas, Consultant has represented that it is qualified by virtue of experience, training, education and expertise to provide these services; and

C. Whereas, City has determined that the public interest, convenience and necessity require the execution of this Agreement.

D. WHEREAS, no official or employee of City has a financial interest, within the provisions of sections 1090-1092 of the California Government Code, in the subject matter of this Agreement.

2. Services.

A. The services to be performed by Consultant shall consist of the following ("Services"): As specified in **Exhibit "A**", attached hereto and incorporated herein by reference, unless otherwise instructed by City.

B. The Services shall be performed in accordance with the Project Schedule set forth in **Exhibit A**. Consultant shall not be liable for any failure or delay in furnishing proposed Services resulting from fire, explosion, flood, storm, Act of God, governmental acts, orders or regulations, hostilities, civil disturbances, strikes, labor difficulties, difficulty in obtaining parts, supplies, or shipping facilities, inability to obtain or delays in obtaining suitable material or facilities required for performance, temporary unavailability of qualified personnel, failure by City to provide appropriate access to equipment or personnel, or other causes beyond Consultant's reasonable control.

3. Additional Services. If City determines that additional Services are required to be provided by Consultant in addition to the Services set forth above, City shall authorize Consultant to perform such additional Services in writing ("Additional Services"). Such Additional Services shall be specifically described and approved by City in writing prior to the performance thereof. Consultant shall be compensated for such Additional Services

DocuSign Envelope ID: C702B174-42AA-462D-A780-FF4EF1C0B64F

in accordance with the amount agreed upon in writing by the Parties. No compensation shall be paid to Consultant for Additional Services which are not specifically approved by City in writing.

4. Consultant's Proposal. This Agreement shall include Consultant's proposal or bid which is incorporated herein as **Exhibit A.** In the event of any inconsistency between the terms of the proposal and this Agreement, this Agreement shall govern.

5. Timing of Performance. Time is of the essence with respect to Consultant's performance of the Services required by this Agreement. Consultant shall diligently and timely pursue and complete the performance of the Services required of it by this Agreement as set forth in **Exhibit A.** City, in its sole discretion, may extend the time for performance of any Service.

6. Compensation. Compensation for the Services shall be billed as set forth in **Exhibit A**, attached hereto. The Compensation is inclusive of all costs that may be incurred by Consultant in performance of the Services, including but not limited to such items as travel, copies, delivery charges, phone charges, and facsimile charges, unless otherwise. In no event shall compensation under this Agreement exceed **Two Hundred Five Thousand Nine Hundred Forty Dollars and 00/00 ($205,940.00)** without the prior written authorization of the City Council.

7. Term of Agreement/Termination. This Agreement shall commence on the Effective Date and continue for a period of one (1) year, ending on November 30, 2024, unless previously terminated as provided herein or as otherwise agreed to in writing by the parties.

A. This Agreement shall be effective as of the date of execution by the City and shall remain in effect until all Services are completed or until terminated as provided for herein.

B. City may terminate this Agreement without cause by providing written notice to Consultant not less than ten days prior to an effective termination date. City's only obligation in the event of termination will be payment of fees and allowed expenses incurred up to and including the effective date of termination.

C. Unless for cause, Consultant may not terminate this Agreement. If Consultant is terminating this Agreement for cause, it must provide the City with thirty (30) days written notice.

D. Upon receipt of a termination notice, Consultant shall: (1) promptly discontinue all Services, unless the notice directs otherwise; and (2) within ten (10) days, deliver to City all files, data, reports, estimates, summaries, and such other information and materials as may have been accumulated or prepared to date by Consultant in performing the Services under this Agreement, whether completed or in progress. Consultant shall provide these documents by both hard copy and in electronic format if

DocuSign Envelope ID: C702B174-42AA-462D-A780-FF4EF1C0B64F

available. In the event of termination for other than cause attributable to Consultant, Consultant shall be entitled to reasonable compensation for the Services it performs up to the date of termination and shall be deemed released from liability for any work assigned but not completed as of the effective date of termination.

8. Agreement Administrator. For purposes of this Agreement, City designates Ray Beeman or designee as the Agreement Administrator who shall monitor Consultant's performance under this Agreement. Consultant shall be notified in writing of any deficiency in the performance of this Agreement in a timely manner by Agreement Administrator Consultant shall have five (5) business days from receipt of the notification to cure any deficiency to the reasonable satisfaction of the Agreement Administrator. All costs for such corrections shall be borne by Consultant and shall not increase Consultant's fees due hereunder. Should the Agreement Administrator determine that Consultant has not performed its obligation as stated in this Agreement in a satisfactory manner, City may terminate this Agreement for cause as specified in Section- Term of Agreement/Termination. All notices, invoices or other documents shall be addressed to the Agreement Administrator, as well as all substantive issues relating to this contract. City reserves the right to change this designation upon written notice to Consultant.

9. Invoices and Payments.

A. Payment shall be made upon receipt and approval of invoices for Services rendered. In order for payment to be made, Consultant's invoice must include an itemization as to the services rendered, date(s) of service, direct and/or subcontract costs, and be submitted on an official letterhead or invoice with Consultant's name, address, and telephone number referenced.

B. The Agreement Administrator shall review the invoices to determine whether services performed and documents submitted are consistent with this Agreement. Payment shall be made within forty-five (45) days following receipt of the invoice or the Agreement Administrator shall provide Consultant with a written statement objecting to the charges and stating the reasons therefore.

C. Payment by City under this Agreement shall not be deemed a waiver of defects, even if such defects were known to City at the time of payment.

10. Records/Audit.

A. Consultant shall be responsible for ensuring accuracy and propriety of all billings and shall maintain all supporting documentation for a minimum of three (3) years from the completion date of the Services under this agreement the following records:

1. All accounts and records, including personnel, property and financial, adequate to identify and account for all costs pertaining to this Agreement and assure proper accounting for all funds;

DocuSign Envelope ID: C702B174-42AA-462D-A780-FF4EF1C0B64F

2. Records which establish that Consultant and any subconsultant who renders Services under this Agreement are in full compliance with the requirements of this Agreement and all federal, state and local laws and regulations

3. Any additional records deemed necessary by City to assume verification of full compliance with this Agreement.

B. City shall have the right to audit Consultant's invoices and all supporting documentation for purposes of compliance with this Agreement for a period of three years following the completion of Services under this Agreement.

C. Upon reasonable notice from City or any other governmental agency, Consultant shall cooperate fully with any audit of its billings conducted by, or of, City and shall permit access to its books, records and accounts as may be necessary to conduct such audits.

11. Successors and Assignment. This Agreement covers professional services of a specific and unique nature. Except as otherwise provided herein, Consultant shall not assign or transfer its interest in this Agreement or subcontract any services to be performed without amending this Agreement. This Agreement shall be binding upon the heirs, executors, administrators, successors and assigns of the parties hereto.

12. Change in Name, Ownership or Control. Consultant shall notify the Agreement Administrator, in writing, of any change in name, ownership or control of Consultant's firm or subconsultant. Change of ownership or control of Consultant's firm may require an amendment to the Agreement.

13. Key Personnel. City has relied upon the professional training and ability of Consultant to perform the Services hereunder as a material inducement to enter into this Agreement. Consultant shall provide properly skilled professional and technical personnel to perform all Services under this Agreement. In the event that City, in its sole discretion, at any time during the Agreement, desires the removal of any person or persons assigned by Consultant to perform Services pursuant to this Agreement, Consultant shall remove any such person immediately upon receiving notice from City.

14. Performance By Consultant. Consultant shall maintain or exceed the level of competency presently maintained by other similar practitioners in the State of California, for professional and technical soundness, accuracy and adequacy of all work, advice and material furnished under this Agreement.

15. Use of Materials.

A. City shall make available to Consultant such materials from its files as may be required by Consultant to perform Services under this Agreement. Such materials shall remain the property of City while in Consultant's possession. Upon termination of this Agreement and payment of outstanding invoices of Consultant, or completion of work

DocuSign Envelope ID: C702B174-42AA-462D-A780-FF4EF1C0B64F

under this Agreement, Consultant shall return to City any property of City in its possession and any calculations, notes, reports, electronic files, or other materials prepared by Consultant in the course of performance of this Agreement.

B. City may utilize any material prepared or work performed by Consultant pursuant to this Agreement, including computer software, in any manner, which City deems proper without additional compensation to Consultant. Consultant shall have no responsibility or liability for any revisions, changes, or corrections made by City, or any use or reuse pursuant to this paragraph unless Consultant accepts such responsibility in writing.

16. Nonuse of Intellectual Property of Third Parties. Consultant shall not use, disclose or copy any intellectual property of any third parties in connection with work carried out under this Agreement, except for intellectual property for which Consultant has a license. Consultant shall indemnify and hold City harmless against all claims raised against City based upon allegations that Consultant has wrongfully used intellectual property of others in performing work for City, or that City has wrongfully used intellectual property developed by Consultant pursuant to this Agreement.

17. Ownership of Work Product. All documents or other information created, developed, or received by Consultant shall, for purposes of copyright law, be deemed works made for hire for City by Consultant and shall be the sole property of City. Consultant shall provide City with copies of these items upon demand, and in any event, upon termination of this Agreement. Notwithstanding the foregoing, City shall own all final deliverables provided to City by Consultant as part of the services provided under this Agreement, provided however, Consultant shall retain sole and exclusive ownership of all right, title, and interest in, and to, its intellectual property and derivatives thereof which no data or Confidential Information of the City was used to create and which was developed entirely using Consultant's own resources, including any and all pre-existing or independently developed know-how, methods, processes and other materials prepared by Consultant. To the extent Consultant's intellectual property is necessary for the City to use the deliverables provided under this Agreement, Consultant grants to City a non-exclusive, royalty-free license to Consultant's intellectual property solely for City's use of such deliverables.

18. Confidentiality Clause. Consultant acknowledges that some of the material and information that may come into its possession or knowledge in connection with this Agreement or its performance may consist of information that is exempt from disclosure to the public or other unauthorized persons under either state or federal statutes ("Confidential Information"). Confidential Information includes, but is not limited to, names, addresses, Social Security numbers, e-mail addresses, telephone numbers, financial profiles, credit card information, driver's license numbers, medical data, law enforcement records, agency source code or object code, agency security data, or information identifiable to an individual that relates to any of these types of information. Consultant agrees to hold Confidential Information in strictest confidence and not to make use of Confidential Information for any purpose other than the performance of this

DocuSign Envelope ID: C702B174-42AA-462D-A780-FF4EF1C0B64F

Agreement, to release it only to authorized employees or Sub-consultants requiring such information for the purposes of carrying out this Agreement, and not to release, divulge, publish, transfer, sell, disclose, or otherwise make the information known to any other party without City's express written consent or as provided by law. Consultant agrees to release such information or material only to employees or Sub-consultants who have signed a nondisclosure agreement. Consultant agrees to implement physical, electronic, and managerial safeguards to prevent unauthorized access to Confidential Information.

"Personal information" including, but not limited to, "Protected Health Information" (PHI) under Health Insurance Portability And Accountability Act (HIPAA), individuals' names, addresses, phone numbers, birth dates, and social security numbers collected, used, or acquired in connection with this Agreement shall be protected against unauthorized use, disclosure, modification or loss.

HIPAA establishes national minimum standards for the use and disclosure of certain health information. The Consultant must comply with all HIPAA requirements and rules when determined applicable by the City. If City determines that (1) City is a "covered entity" under HIPAA, and that (2) Consultant will perform "business associate" services and activities covered under HIPAA, then at City's request, Consultant agrees to execute City's Agreement in compliance with HIPAA.

Consultant shall ensure its directors, officers, employees, Sub-consultants or agents use personal information solely for the purposes of accomplishing the services set forth herein. Consultant and its Sub-consultants agree not to release, divulge, publish, transfer, sell or otherwise make known to unauthorized persons personal information without the express written consent of the City or as otherwise required by law.

Any breach of this provision may result in termination of the Agreement and demand for return of all personal information. Moreover, Consultant will indemnify and hold the City harmless from and against all losses and damages resulting from any unauthorized or improper disclosure, dissemination or use of the information as a result, in whole or in part, of Consultant’s action or inaction.

19. Legal Requirements.

A. Consultant shall secure and maintain all licenses or permits required by law, including a City business license, and shall comply with all ordinances, laws, orders, rules, and regulations pertaining to the work.

B. Consultant warrants that it shall perform the Services required by this Agreement in compliance with all applicable Federal and California employment laws, including, but not limited to, those laws related to minimum hours and wages; occupational health and safety; fair employment and employment practices; workers’ compensation insurance and safety in employment; and all other Federal, State and local laws and ordinances applicable to the services required under this Agreement. Consultant shall indemnify and hold harmless City from and against all

DocuSign Envelope ID: C702B174-42AA-462D-A780-FF4EF1C0B64F

claims, demands, payments, suits, actions, proceedings, and judgments of every nature and description including attorneys' fees and costs, presented, brought, or recovered against City for, or on account of any liability under any of the above-mentioned laws, which may be incurred by reason of Consultant's performance under this Agreement.

C. Consultant covenants that there shall be no discrimination based upon race, color, creed, religion, sex, marital status, age, handicap, national origin or ancestry, or any other category forbidden by law in performance of this Agreement.

20. Conflict of Interest and Reporting.

A. Consultant shall at all times avoid conflicts of interest or the appearance of a conflict of interest in the performance of this Agreement. If required, Consultant shall comply with the City's Conflict of Interest reporting requirements. Consultant understands that pursuant to Gardena Municipal Code sections 2.24.020H and 2.24.025G, it is forbidden to make any contribution to a candidate or committee of a candidate for a municipal office of the City, or to an officeholder, until the completion of Services to be performed under this Agreement.

B. Consultant and its representatives shall refrain from lobbying City of Gardena officials, employees and representatives for the duration of this Agreement.

21. Guarantee and Warranty. Consultant warrants to City that the material, analysis, data, programs and Services to be delivered or rendered hereunder will be of the kind and quality designated and will be performed by qualified personnel. Without waiver of City's other rights or remedies, City may require Consultant to re-perform any of said Services, which were not performed in accordance with these standards. Consultant shall perform the remedial Services at its sole expense.

22. Insurance.

A. Commencement of Work. Consultant shall not commence work under this Agreement until it has obtained City approved insurance. Before beginning work hereunder, during the entire period of this Agreement, for any extensions hereto, and for periods after the end of this Agreement as may be indicated below, Consultant must have and maintain in place all of the insurance coverage required in this Section. Consultant's insurance shall comply with all items specified by this Agreement. Any subcontractors shall be subject to all of the requirements of this Section and Consultant shall be responsible to obtain evidence of insurance from each subcontractor and provide it to City before the subcontractor commences work.

B. Insurance Company Requirements. All insurance policies used to satisfy the requirements imposed hereunder shall be issued by insurers admitted to do business in the State of California. Insurers shall have a current Best's rating of not less than A-:VI, unless otherwise approved by City.

DocuSign Envelope ID: C702B174-42AA-462D-A780-FF4EF1C0B64F

C. Coverage, Limits and Policy Requirements. Consultant shall maintain the types of coverage and limits indicated below:

1. Commercial General Liability Insurance - a policy for occurrence coverage for bodily injury, personal injury and property damage, with coverage at least as broad as Insurance Services Office Form CG 00 01, with no special limitations affecting City. The limit for all coverage under this policy shall be no less than one million dollars ($1,000,000.00) per occurrence.

2. Commercial Auto Liability Insurance - a policy with coverage at least as broad as Insurance Services Office form CA 0001, including Symbol 1 (any auto). The limit for bodily injury and property damage liability shall be no less than one million dollars ($1,000,000.00) per accident.

3. Policy Requirements. The policies set forth above shall comply with the following, as evidenced by the policies or endorsements to the policies:

a. The City, its appointed and elected officers, employees, agents and volunteers shall be added as additional insured to the Commercial General Liability policy.

b. Any cancelled or non-renewed policy will be replaced with no coverage gap and a current Certificate of Insurance will be provided to the City.

c. For any claims with respect to the Services covered by this Agreement, Consultant's Commercial General Liability insurance coverage shall be primary insurance as respects the City, its elected and appointed officers, employees, agents and volunteers. Any insurance or self-insurance maintained by the City, its elected and appointed officers, employees, agents and volunteers shall be excess of Consultant's insurance and shall not contribute with it.

4. Worker's Compensation and Employer's Liability Insurance - a policy which meets all statutory benefit requirements of the Labor Code, or other applicable law, of the State of California. The minimum coverage limits for said insurance shall be no less than one million dollars per claim. The policy shall be issued by an insurance company which is admitted to do business in the State of California.

5. Professional Errors & Omissions - a policy with minimum limits of one million dollars ($1,000,000.00) per claim and aggregate. This policy shall be issued by an insurance company which is admitted to do business in the State of California.

D. Additional Requirements. The procuring of such required policies of insurance shall not be construed to limit Consultant's liability hereunder or to fulfill the indemnification provisions and requirements of this Agreement. There shall be no recourse against City for payment of premiums or other amounts with respect thereto. City shall notify Consultant in writing of changes in the insurance requirements. If

DocuSign Envelope ID: C702B174-42AA-462D-A780-FF4EF1C0B64F

Consultant does not deposit copies of acceptable insurance endorsements with City incorporating such changes within sixty (60) days of receipt of such notice, Consultant shall be deemed in default hereunder.

E. Deductibles. Any deductible or self-insured retention over $25,000 per occurrence must be declared to and approved by City.

F. Verification of Compliance. Consultant shall furnish City with original endorsements effecting coverage required by this Agreement. The endorsements are to be signed by a person authorized by the insurer to bind coverage on its behalf. All endorsements are to be received and approved by City before work commences.

G. Termination for Lack of Required Coverage. If Consultant, for any reason, fails to have in place, at all times during the term of this Agreement, including any extension hereto, all required insurance and coverage, City may immediately obtain such coverage at Consultant's expense and/or terminate this Agreement.

23. Indemnity.

A. Consultant assumes all risk of injury to its employees, agents, and contractors, including loss or damage to property.

B. Consultant agrees to defend, indemnify, hold free and harmless the City, its elected officials, officers, agents, employees and volunteers, at Consultant's sole expense, from and against any and all claims, actions, suits or other legal proceedings brought against the City, its elected officials, officers, agents, employees and volunteers arising out of the performance of the Consultant, its employees, and/or authorized subcontractors, of the work undertaken pursuant to this Agreement. The defense obligation provided for hereunder shall apply without any advance showing of negligence or wrongdoing by the Consultant, its employees, and/or authorized subcontractors, but shall be required whenever any claim, action, complaint, or suit asserts as its basis the negligence, errors, omissions or misconduct of the Consultant, its employees, and/or authorized subcontractors, and/or whenever any claim, action, complaint or suit asserts liability against the City, its elected officials, officers, agents, employees and volunteers based upon the work performed by the Consultant, its employees, and/or authorized subcontractors under this Agreement, whether or not the Consultant, its employees, and/or authorized subcontractors are specifically named or otherwise asserted to be liable. Notwithstanding the foregoing, the Consultant shall not be liable for the defense or indemnification of the City for claims, actions, complaints or suits arising out of the sole negligence or willful misconduct of the City. This provision shall supersede and replace all other indemnity provisions contained either in the City's specifications or Consultant's Proposal, which shall be of no force and effect. NOTWITHSTANDING ANYTHING TO THE CONTRARY IN THIS AGREEMENT, CONSULTANT SHALL NOT BE LIABLE FOR ANY SPECIAL, INDIRECT, CONSEQUENTIAL, LOST PROFITS, OR PUNITIVE DAMAGES SUSTAINED OR INCURRED IN CONNECTION WITH THIS AGREEMENT, WHETHER OR NOT SUCH DAMAGES ARE FORESEEABLE.

DocuSign Envelope ID: C702B174-42AA-462D-A780-FF4EF1C0B64F

C. No official, employee, agent or volunteer of City shall be personally liable for any default or liability under this Agreement.

24. Independent Contractor. Consultant agrees to furnish consulting services in the capacity of an independent contractor and neither Consultant nor any of its employees shall be considered to be an employee or agent of City.

25. PERS Eligibility Indemnification. In the event that Consultant or any employee, agent, or subcontractor of Consultant providing Services under this Agreement claims or is determined by a court of competent jurisdiction or the California Public Employees Retirement System (PERS) to be eligible for enrollment in PERS as an employee of the City, Consultant shall indemnify, defend, and hold harmless City for the payment of any employee and/or employer contributions for PERS benefits on behalf of Consultant or its employees, agents, or subcontractors, as well as for the payment of any penalties and interest on such contributions, which would otherwise be the responsibility of City.

Notwithstanding any other agency, state or federal policy, rule, regulation, law or ordinance to the contrary, Consultant and any of its employees, agents, and subcontractors providing service under this Agreement shall not qualify for or become entitled to, and hereby agree to waive any claims to, any compensation, benefit, or any incident of employment by City, including but not limited to eligibility to enroll in PERS as an employee of City and entitlement to any contribution to be paid by City for employer contribution and/or employee contributions for PERS benefits.

26. Notices. Any notice or communication given under this Agreement shall be effective when deposited, postage prepaid, with the United States Postal Service and addressed to the contracting parties. Name, address, telephone and facsimile numbers of the parties are as follows:

City of Gardena:
1700 West 162nd Street
Gardena, California 90247-3732
Attn: Ray Beeman
Title: Director of Administrative Services
Email: rbeeman@cityofgardena.org
Telephone: (310) 217-9502

To Consultant: Gallagher Benefit Services, Inc.
2835 Seventh Street
Berkeley, CA 94710
Attn: Georg S. Krammer
Email: georg_krammer@ajg.com
Telephone: (510) 658-5633

Either party may change the information to which notice or communication is to be sent

DocuSign Envelope ID: C702B174-42AA-462D-A780-FF4EF1C0B64F

by providing advance written notice to the other party.

27. Severability. If any provision of this Agreement shall be held illegal, invalid, or unenforceable, in whole or in part, such provision shall be modified to the minimum extent necessary to make it legal, valid, and enforceable, and the legality, validity, and enforceability of the remaining provisions shall not be affected thereby.

28. Jurisdiction and Venue. This Agreement shall be deemed a contract under the laws of the State of California and for all purposes shall be interpreted in accordance with such laws. Both parties hereby agree and consent to the exclusive jurisdiction of the courts of the State of California and that the venue of any action brought hereunder shall be Los Angeles County, California.

29. Waiver. No delay or failure by either Party to exercise or enforce at any time any right or provision of this Agreement shall be considered a waiver thereof or of such Party's right thereafter to exercise or enforce each and every right and provision of this Agreement. To be valid a waiver shall be in writing but need not be supported by consideration. No single waiver shall constitute a continuing or subsequent waiver.

30. Electronic Signatures. The parties hereby acknowledge and agree that electronic records and electronic signatures, as well as facsimile signatures, used in connection with the execution of this Agreement and electronic signatures, facsimile signatures or signatures transmitted by electronic mail in so-called pdf format shall be legal and binding and shall have the same full force and effect as if a paper original of this Agreement had been delivered and had been signed using a handwritten signature. City and Consultant (i) agree that an electronic signature, whether digital or encrypted, of a party to this Agreement is intended to authenticate this writing and to have the same force and effect as a manual signature, (ii) intend to be bound by the signatures (whether original, faxed or electronic) on any document sent or delivered by facsimile or, electronic mail, or other electronic means, (iii) are aware that the other party will reply on such signatures, and (iv) hereby waive any defenses to the enforcement of the terms of this Agreement based on the foregoing forms of signature. If this Agreement has been executed by electronic signature, all parties executing this document are expressly consenting under the United States Federal Electronic Signatures in Global and National Commerce Act of 2000 ("E-SIGN") and California Uniform Electronic Transactions Act ("UETA")(Cal. Civ. Code § 1633.1, et seq.), that a signature by fax, email or other electronic means shall constitute an Electronic Signature to an Electronic Record under both E-SIGN and UETA with respect to this specific transaction.

31. Joint Drafting. Each party acknowledges that it has had an adequate opportunity to review each and every provision in this Agreement and to submit the same to counsel and other consultants for review and comment and that the parties jointly drafted this Agreement. No provision of this Agreement or any Assignment shall be construed more strictly against one party than the other party by reason that one or the other party proposed, drafted or modified such provision or any other existing or proposed provision.

DocuSign Envelope ID: C702B174-42AA-462D-A780-FF4EF1C0B64F

32. Public Records Act Disclosure. Consultant has been advised and is aware that this Agreement and all reports, documents, information and data, including, but not limited to, computer tapes, discs or files furnished or prepared by Consultant, or any of its subcontractors, pursuant to this Agreement and provided to City may be subject to public disclosure as required by the California Public Records Act (California Government Code section 7920.000 *et seq*.). Exceptions to public disclosure may be those documents or information that qualify as trade secrets, as that term is defined in the California Government Code section 7924.510, and of which Consultant informs City of such trade secret. The City will endeavor to maintain as confidential all information obtained by it that is designated as a trade secret. The City shall not, in any way, be liable or responsible for the disclosure of any trade secret including, without limitation, those records so marked if disclosure is deemed to be required by law or by order of the Court.

33. Authority to Execute. The persons executing this Agreement on behalf of the parties warrant that they are duly authorized to execute this Agreement.

34. Attorney's Fees. In the event that legal action is necessary to enforce the provisions of this Agreement, or to declare the rights of the parties hereunder, the parties agree that the prevailing party in the legal action shall be entitled to recover attorney's fees and court costs from the opposing party.

35. Section Headings. The Section headings used in this Agreement are for reference purposes only and shall have no binding effect.

36. Entire Agreement. This Agreement contains the entire understanding between City and Consultant. Any prior agreement, promises, negotiations or representations not expressly set forth herein are of no force or effect. Subsequent modifications to this Agreement shall be effective only if in writing and signed by both parties. This Agreement may be signed by the parties hereto in separate counterparts, including both counterparts that are executed on paper and counterparts that are in the form of electronic signatures. Electronic signatures include facsimile or email electronic signatures. Each executed counterpart shall be deemed an original. All counterparts, taken together, constitute the executed Agreement.

37. Section Headings. The Section headings used in this Agreement are for reference purposes only and shall have no binding effect.

38. Counterparts. This Agreement may be executed in one or more counterparts, each of which shall be deemed an original. All counterparts shall be construed together and shall constitute one agreement.

Signatures Next Page

DocuSign Envelope ID: C702B174-42AA-462D-A780-FF4EF1C0B64F

IN WITNESS WHEREOF, the parties have hereunto affixed their names as of the day and year written below.

"City"
City of Gardena

By: _____
Tasha Cerda, Mayor

Date: _____

"Consultant"
Gallagher Benefit Services, Inc.

By: _____
Georg S. Krammer, Managing Director

Date: 11-30-23

By: _____
Catherine B. Kaneko, Managing Director

Date: 12/4/23

ATTEST:

_____
Mina Semenza, City Clerk

APPROVED AS TO FORM:

_____
Carmen Vasquez, City Attorney

DocuSign Envelope ID: C702B174-42AA-462D-A780-FF4EF1C0B64F

EXHIBIT A

Koff & Associates
A Gallagher Company

November 15, 2023

Classification and Total Compensation Study Proposal

City of Gardena

KOFF & ASSOCIATES, A GALLAGHER COMPANY

GEORG S. KRAMMER
Managing Director, Compensation and Rewards Consulting

2835 Seventh Street
Berkeley, CA 94710
www.KoffAssociates.com

georg_krammer@ajg.com
Tel: 510.658.5633
Fax: 510.652.5633

DocuSign Envelope ID: C702B174-42AA-462D-A780-FF4EF1C0B64F

Koff & Associates
Human Resources and Recruiting since 1984

November 15, 2023

Mr. Ray Beeman, CPA
Director of Administrative Services
1700 West 162nd Street
Gardena, CA 90247

Dear Mr. Beeman:

Thank you for the opportunity to provide a proposal for a **Classification and Total Compensation Study** for the **City of Gardena** ("City"). We are most interested in assisting the City with this important study and feel that we are uniquely qualified to provide value to your organization based on our experience working with other cities, counties, special districts, joint-powers associations, and other public agencies.

Koff & Associates, now a Gallagher company, is an experienced Human Resources and Recruitment Services firm providing human resources services to cities, counties, special districts, courts, educational institutions, and other public agencies for 39 years. The firm has achieved a reputation for working successfully with management, employees, and governing bodies. We believe in a high level of dialogue and input from study stakeholders and our proposal speaks to that level of effort. Our firm's extra effort has resulted in close to *100% implementation* of all our classification and compensation studies.

Koff & Associates ensures that each of our projects is given the appropriate resources and attention, resulting in a high level of quality control, excellent communication between clients and our office, commitment to meeting timelines and budgets, and a consistently high-caliber work product.

As a Managing Director of Koff & Associates, I would assume the role of Project Director and be responsible for the successful completion of project. I can be reached at our Berkeley address and the phone number listed on the cover page. My email is **georg_krammer@ajg.com**.

This proposal will remain valid for at least 90 days from the date of submittal. Please call if you have any questions or wish additional information. We look forward to the opportunity to provide professional services to the **City of Gardena**.

Sincerely,

Georg S. Krammer
Managing Director, Compensation and Rewards Consulting

DocuSign Envelope ID: C702B174-42AA-462D-A780-FF4EF1C0B64F

TABLE OF CONTENTS

Firm Qualifications 1

Team Member Qualifications 2

References 3

Executive Summary, Approach, Methodology 5

Time Requirements 20

Cost Proposal 21

Contractual Considerations 25
- Memorandum of Insurance

Signature Page

Appendix
- Staff Resumes
- Scope of Work by Department

DocuSign Envelope ID: C702B174-42AA-462D-A780-FF4EF1C0B64F

FIRM QUALIFICATIONS

Koff & Associates ("K&A") is a full-spectrum, public-sector human resources and recruitment services firm that was founded in 1984 by Gail Koff; K&A has been assisting cities, counties, special districts, other public agencies, and non-profit organizations with their human resources needs for 39 years.

On April 30, 2021, we merged with Arthur J. Gallagher and are now officially a Gallagher Division. Our headquarters are in Berkeley, CA, and we have satellite offices in Southern California, the Central Valley, the Sacramento Region, and the Western Region.

We are familiar with the various public sector organizational structures, agency missions, operational and budgetary requirements, and staffing expectations. We have extensive experience working in both union and non-union environments (including service as the management representative in meet and confer and negotiation meetings), working with City Councils, County Commissions, Boards of Directors, Boards of Supervisors, Boards of Trustees, Merit Boards, and Joint Power Authorities.

The firm's areas of focus are classification and compensation studies (approximately 70% of our workload); executive search and staff recruitments; organizational development/assessment studies; performance management and incentive compensation programs; development of strategic management tools; policy/procedure development and employee handbooks; training and development; public agency consolidations and separations; Human Resources audits; and serving as off-site Human Resources Director for smaller public agencies that need the expertise of a Human Resources Director but do not need a full-time, on-site professional.

Without exception, all our classification and compensation studies have successfully met all of our intended commitments; communications were successful with employees, supervisors, management, and union representatives; and we were able to assist each agency in successfully implementing our recommendations. All studies were brought to completion within stipulated time limits and proposed budgets.

Our long list of clients (please see https://koffassociates.com/our-clients/) is indicative of our firm's reputation as being a quality organization that can be relied on for producing comprehensive, sound, and cost-effective recommendations and solutions. K&A has a reputation for being "hands on" with the ability and expertise to implement its ideas and recommendations through completion in both union and non-union environments.

K&A relies on our stellar reputation and the recommendations and referrals of past clients to attract new clients. Our work speaks for itself and our primary goal is to provide professional and technical consulting assistance with integrity, honesty and a commitment to excellence. We are very proud of the fact that in working with hundreds of public agency clients and completing hundreds of classification and/or compensation and other types of studies, we have only had a handful of formal appeals in our entire history.

DocuSign Envelope ID: C702B174-42AA-462D-A780-FF4EF1C0B64F

Our team consists of 37 employees as shown below in our organizational chart.

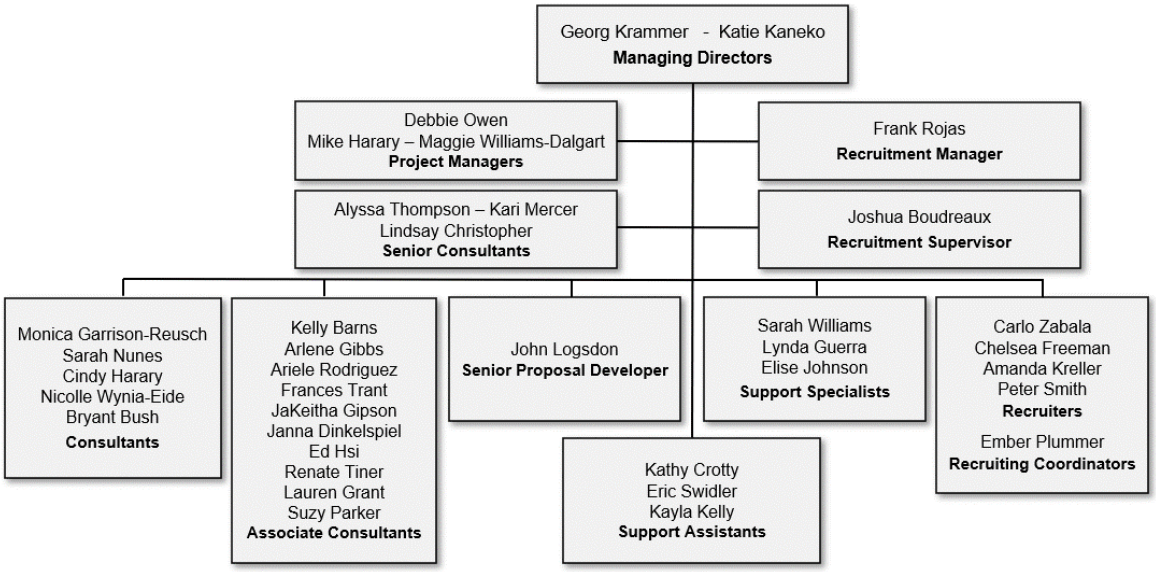

No subcontractors will be assigned to this study.

TEAM MEMBER QUALIFICATIONS

All members of our team have worked on multiple comprehensive classification and total compensation studies and are well acquainted with the wide array of public sector organizational structures, compensation structures, classification plans, as well as the challenges and issues that arise when conducting studies such as this one for the City.

KEY PERSONNEL

Our project team will be led by Co-Project Directors Georg Krammer (Managing Director), and Debbie Owen (Project Manager). They will coordinate all of K&A's efforts, attend all meetings with the City, and be responsible for all work products and deliverables.

CONSULTANTS

Lindsay Christopher (Senior Consultant), Kari Mercer (Senior Consultant), Alyssa Thompson (Senior Consultant), Monica Garrison-Reusch (Consultant), Arlene Gibbs (Associate Consultant), Sarah Nunes (Consultant), Ariele Rodriguez (Associate Consultant), Janna Dinkelspiel (Associate Consultant), Edi Hsi (Associate Consultant), Nicolle Wynia-Eide (Consultant), Kelly Barns (Associate Consultant), Cindy Harary (Consultant) and Renate Tiner (Associate Consultant) will conduct classification analysis and interviews with employees and management, compensation data collection and analysis, internal job analysis, develop recommendations and implementation strategies.

WORKLOAD

We currently have a team of 25 HR consultants and five administrative support staff – resources that we are able to pool base on each project's needs, to execute projects and to meet clients' needs and expectations. Each time we are selected as the successful bidder on a project, we strategize to determine project timelines, deliverable deadlines, and the resources that are required to produce the deliverables as promised. We are poised to accommodate the City's classification and compensation study and plan to devote the necessary resources for the successful execution of the project.

Biographies of the specific staff who will be assigned to this study can be found in the Appendix.

DocuSign Envelope ID: C702B174-42AA-462D-A780-FF4EF1C0B64F

REFERENCES

Agency & Project	Contact
City of Coachella (population: 44,953) Several Classification and Compensation Studies in 2008, 2014, 2016, and 2017.	**Ms. Sandy Krause** HR Manager (760) 398-3502, ext. 132 1515 Sixth Street Coachella, CA 92236 Skrause@coachella.org
City of Corona (Population: 168,819) Citywide Classification and Total Compensation Study, completed 2022.	**Ms. Angela Rivera** Chief Talent Officer (951) 279-3501 400 S. Vicentia Ave., Corona, CA 92882 angela.rivera@coronaca.gov
City of El Monte (population: 116,109) Citywide Classification, Compensation and Organizational Study, completed 2020	**Ms. Kristen Enomoto** Sr. Management Analyst, HR/RM Department (626) 580-2044 11333 Valley Boulevard El Monte, CA 91731 kenomoto@elmonteca.gov
City of El Segundo Ongoing classification and compensation studies since 2020.	**Rebecca Redyk** Human Resources Director 350 Main Street El Segundo, CA 90245 310-524-2335 rredyk@elsegundo.org
City of Hemet (Population: 78,657) Several compensation studies since 2019; most recent completed 2021. Currently, a classification study is underway in 2023.	**Ms. Norma Rangel** Human Resources Analyst (951) 229-2287 445 E Florida Avenue Hemet, CA 92543 NRangel@cityofhemet.org
City of Lomita (population: 20,514) Classification and Compensation Study, completed 2022. HR Audit, completed 2016.	**Gary Y. Sugano** Assistant City Manager (310) 325-7110, x121 24300 Narbonne Avenue Lomita, CA 90717 g.sugano@lomitacity.com

DocuSign Envelope ID: C702B174-42AA-462D-A780-FF4EF1C0B64F

City of Menifee (population: 77,519) Classification and Compensation Study, ongoing 2023. Classification and Compensation Study, completed 2017. Citywide Classification and Total Compensation Study, completed 2011.	**Mr. Bruce Foltz** Finance Director, City of El Monte (626) 580-2075 11333 Valley Blvd, El Monte, CA 91731 bfoltz@elmonteca.gov ***Please note:*** *During the Studies, Mr. Foltz was our contact at City of Menifee. Mr. Foltz is now Finance Director at the City of El Monte.*
City of Murrieta (population: 111,674) Citywide Classification and Total Compensation Study, completed 2019.	**Ms. Stacey Stevenson** Deputy City Manager (951) 461-6004 1 Town Square Murrieta, CA 92562 sstevenson@murrietaca.gov ***Please note****: Ms. Stevenson was K&A's reference when she was at City of National City. She is now the Deputy City Manager at the City of Murrieta.*
City of Newport Beach Various classification and compensation studies since 2019.	**Ms. Jyll C Ramirez** Senior HR Analyst (949) 644-3306 100 Civic Center Drive Newport Beach, CA 92660 jramirez@newportbeachca.gov
City of Santa Monica (Population: 91,577) Ongoing Classification and Compensation Studies for Public Works Department's Water Resources Division since 2020. Organizational Assessment for Water Resources Division completed in 2020.	**Ms. Sunny Wang, P.E.** Water Resources Manager (310) 458-8230 2500 Michigan Ave, Building 1 Santa Monica, CA 90404 sunny.wang@smgov.net
City of Upland Classification and Compensation Study, 2023	**Ms. Theresa (Terry) Doyle** Deputy Director of Human Resources/Risk Management (909)931-4376 460 N. Euclid Avenue Upland, CA 91786 tdoyle@uplandca.gov

DocuSign Envelope ID: C702B174-42AA-462D-A780-FF4EF1C0B64F

EXECUTIVE SUMMARY, APPROACH, METHODOLOGY

The City desires human resources assistance to conduct an objective analysis of its current classification and compensation practices; recommend changes that result in equitable, competitive and legally defensible classification and pay practices that will enrich the attraction and retention of qualified individuals as well as enhance opportunities for growth and professional development; evaluate the current employee benefit and compensation plan against local and regional markets, and comparable employers; and provide recommendations for adjustments.

The City employs approximately 500 full- and part-time employees in seven City departments:

[1] Elected and Administrative Offices;
[2] Administrative Services;
[3] General Services;
[4] Recreation and Human Services;
[5] Community Development;
[6] Transportation; and
[7] Police.

There are three bargaining units:

[1] Gardena Municipal Employees Association;
[2] Gardena Management Employees Organization; and
[3] Gardena Police Officers Association.

K&A conducted a classification study for the City in 2019 and developed recommendations for a classification plan, classification concepts, position allocations, and 77 new/updated classification descriptions. The study was then put on pause and City now wishes to resume the classification study and add a total compensation study component. The scope of work for this study is limited to a specified number of positions in each department, and the classification description work associated with that scope, as outlined in Appendix B; there are approximately 138 positions for the classification study only, and any ongoing reference to that work is limited to only those 138 positions; however, the total compensation study is City-wide for all classifications.

The study's first level of effort is to initially develop an updated and well-structured classification system and classification descriptions for all study positions that are legally compliant (including Fair Labor Standards Act ("FLSA") and Americans with Disabilities Act ("ADA") requirements), internally aligned, reflective of contemporary standards, and accurately descriptive of current roles, responsibilities, duties, and qualifications. The classification analysis process includes orientation and briefing sessions with study employees, management, Human Resources, union representation, and other stakeholders, as appropriate; the completion of a position description questionnaire by study employees; and interviews with supervisors and management to address any classification issues. All participating employees will be allocated to an appropriate classification; draft classification descriptions will be developed, and sent back to the City management for additional feedback and concurrence.

A second level of effort will be to review the City's compensation structure for the studied classifications and to conduct a total compensation market survey (salaries plus benefits) using a set of appropriate comparator agencies. The identification of comparator agencies, benchmark classifications, and benefits to be collected is an iterative process that includes all stakeholders. We have found this open discussion philosophy to be critical to our success for organizational buy-in. Once the external data development is

DocuSign Envelope ID: C702B174-42AA-462D-A780-FF4EF1C0B64F

completed, we will make specific recommendations for internal equity for non-benchmarked classifications and classifications without a large enough market sampling.

The compensation study will contain specific recommendations regarding the integration of all study classifications into the City's compensation structure, with the goal of developing a clearly designed, internally equitable format that is flexible for career opportunity and future growth. Our study will make recommendations regarding a salary structure that takes the City's compensation preferences into consideration as well as the appropriate placement of each classification on the City's salary schedule.

The study includes a significant number of meetings with the Study Project Team, Human Resources, employees, union representation, and the City Council, as desired. We have expertise in labor/management relations and understand the importance of active participation by all stakeholders to ensure a successful outcome. The meetings and "stakeholder touch-points" that we recommend ensure understanding of the project parameters, enhance accurate intake and output of information, and create a collaborative and interactive approach resulting in greater buy-in for study recommendations. This interactive approach has resulted in almost 100% implementation success of K&A's studies.

The majority of our clients are unionized and our larger city and county clients typically have multiple unions. Due to the multitude of stakeholder groups who are affected by any compensation study K&A conducts, our team understands the importance of accurate and validated data that withstands any scrutiny, effective and ongoing communication throughout each effort, and collaboration with the various stakeholder groups to ensure organizational buy-in to our findings and recommendations. We have developed a unique methodology of stakeholder "touchpoints" and collaboration that has made us highly successful and effective and has earned our team respect, agreement, and understanding from all stakeholders. In addition, we adjust and customize our methodology based on each individual client's unique needs and circumstances.

We also recognize that both the City and union representatives have obligations to employees and members to ensure that any study is conducted in a fair and equitable manner. Our project work plans are designed for transparency and we strongly encourage dialog with all stakeholders on study deliverables so they in turn can express their concerns; we all have a shared goal of ensuring the process followed is fair and equitable.

This intense and comprehensive stakeholder engagement and our transparent study processes are also a mechanism of quality control. The fact that our information, data, and recommendations have to be able to withstand utmost scrutiny by diverse stakeholders require an in-depth multi-step quality control process for deliverables. This involves K&A team member validation of classification analyses and compensation data, K&A Project Manager review of all classification and compensation analyses, recommendations and deliverables, and finally K&A Principal (Project Director) review of deliverables before submittal to the client.

Study Objectives

Classification Objectives:

- To analyze and update the City's classification system and each study position's classification description and structure through a comprehensive process of job analysis and evaluation, including review of existing documentation, position description questionnaire completion, employee interviews, management interviews, analysis of existing positions

DocuSign Envelope ID: C702B174-42AA-462D-A780-FF4EF1C0B64F

and working situations, analysis of levels of duties and responsibilities, and other professional methods, as appropriate;

- To recommend each study position for title change or reclassification (as appropriate), create new classifications (if applicable), eliminate outdated classifications (if applicable), and consolidate classifications assigned to similar functional areas (as appropriate);
- To provide for growth and flexibility of assignment within the new classification structure, where feasible, in recognition that some job duties and responsibilities may evolve over time, as well as to provide adequate career paths and class series/job families that will foster career service within the City;
- To clearly state definitions of job classifications, the typical job functions, and minimum required and preferred/desired qualifications such as education, prior work experience, knowledge, skills, abilities, licenses, certifications, and physical demands and working conditions;
- To provide a classification structure that ensures regulatory compliance, including allocation of each study position to the correct classification with appropriate FLSA designation as well as meeting ADA and EEO regulations;
- To provide for adequate educational, review, and appeal processes that will result in a product that is understood by all levels of personnel and is internally equitable; and
- To ensure sufficient documentation and training throughout the study, on methods used to determine appropriate classification and level, methods for logical progression of movement between classifications, classification concepts and distinguishing characteristics, as well as the delivery of final reports and recommendations to guide the organization in implementing, managing, and maintaining the classification system.

Compensation Objectives:

- To make recommendations regarding a list of appropriate, logical and defensible comparator agencies, benchmark classifications, and benefits to be collected prior to beginning the compensation portion of the study;
- To collect accurate salary and benefit data from the approved group of comparator agencies and to ensure that the information is analyzed in a manner that is clear and comprehensible to the Study Project Team, Human Resources, management, employees, union representation, and the City Council;
- To carefully analyze the scope and level of duties and responsibilities, requirements for successful work performance, and other factors for survey classes, according to generally accepted compensation practices;
- To review the City's compensation structure and practices and develop compensation recommendations that will assist the City in recruiting, motivating, and retaining competent staff;
- To develop solutions that address pay equity issues, analyze the financial impact of addressing pay equity issues, and create a market adjustment implementation strategy supporting the City's goals, objectives, and budget considerations;
- To evaluate benefit offerings in the labor market and make recommendations for better alignment and/or different benefit offerings as indicated by the analysis and best practices;
- To create a comprehensive final report summarizing the compensation study approach and methodology, analytical tools, findings, and recommended compensation structure;

DocuSign Envelope ID: C702B174-42AA-462D-A780-FF4EF1C0B64F

- To recommend appropriate internal salary relationships and allocate classes to salary ranges in a comprehensive salary range plan; and
- To ensure sufficient documentation and training throughout the study, on methods used to determine appropriate salary ranges, methods for logical progression of movement within the salary scale for each classification, and other practices, so that our recommendations can be implemented and maintained in a competent and fair manner.

Overall Objectives:

- To review and understand all current documentation, rules, regulations, policies, budgets, procedures, class descriptions, organizational charts, memoranda of understanding, personnel policies, wage and salary schedules, and related information so that our recommendations can be operationally incorporated with a minimum of disruption;
- To conduct start-up Study Project Team meetings with management, study project staff, and other stakeholders to discuss any specific concerns with respect to the development of classification and compensation recommendations; finalize study plans and timetables; conduct orientation sessions with management, union leadership, and study employees in order to educate and explain the scope of the study and describe what are and are not reasonable study expectations and goals;
- To work collaboratively and effectively with the City and its stakeholders while at the same time maintaining control and objectivity in the conduct of the study;
- To develop a classification and compensation structure that meets all legal requirements, that is totally non-discriminatory, and that easily accommodates organizational change, growth, and operational needs;
- To document all steps in the process and provide documentation and training for Human Resources and other staff, as appropriate, in classification and compensation analysis methodologies so that the City can integrate, maintain, administer, and defend any recommended changes after the initial implementation; and
- To provide effective ongoing communications throughout the duration of the project and continued support after implementation.

Methodology / Work Plan / Deliverables

This section of the proposal identifies the actual work plan. We believe that our detailed explanation of methodology and work tasks clearly distinguishes our approach and comprehensiveness.

Our approach is to complete the classification and job evaluation before completing the compensation review. The reasons for this include:

- The description of the work performed and the requirements for that work are, in the minds of the employees and their supervisors, inextricably associated with the "worth of that work" or compensation, which is often a highly emotional issue. Separating the two phases of the study, even though elements of phases may be conducted concurrently, tends to produce more objective classification results.
- The compensation review will be completed when there is a full understanding of the work of the City, thereby ensuring that the data developed from the labor market and the City's classifications is accurate.

Given these parameters, our approach is as follows:

DocuSign Envelope ID: C702B174-42AA-462D-A780-FF4EF1C0B64F

PHASE I: CLASSIFICATION STUDY

Deliverable A: Meetings with Study Project Team and Management Staff, Initial Documentation Review, and Development of Communications and Engagement Plan

This phase includes identifying the City's Study Project Team, contract administrator, and reporting relationships. Our team of Project Managers and H.R. Associates will conduct an orientation and briefing session with the Study Project Team to explain process and methodology; create the specific work plan and work schedule; identify subsequent tasks to be accomplished; reaffirm the primary objectives and specific end products; determine deadline dates for satisfactory completion of the overall assignment; determine who will be responsible for coordinating/scheduling communications with employees, management, union representation, and the Council; and develop a timetable for conducting the same.

In preparation for this study, we conducted initial meetings with Department Heads to communicate any areas of concerns and pain points they are experiencing with the current classification and compensation system, and to identify those classifications/positions that needed to be studied or revisited since the 2019 study. Included in this task will be the gathering of written documentation, identifying current incumbents, and assembling current class descriptions, organizational charts, salary schedules, budgets, memoranda of understanding ("MOU"), personnel policies, previous classification and compensation studies, and any other relevant documentation to gain a general understanding of City operations.

City terminology and methods of current classification and compensation procedures, as well as the written questionnaire instrument for the classification study that will be used in the job analysis phase will be reviewed and agreed to. We will discuss methodology, agree to formats for class descriptions and compensation results, identify appropriate comparator agencies, benchmark classifications, and benefits to be surveyed for compensation survey purposes. We will respond to any questions that may arise from the various stakeholders.

We will develop a communications and engagement plan to foster organizational buy-in and acceptance of study outcomes and consultant recommendations throughout the project by City stakeholders including employees. The goal of the communications and engagement plan is to build positive and effective relationships with the study stakeholders and achieve consensus whenever possible and to strive to understand and take into consideration stakeholders' ideas, opinions, desires, and issues, and to fully address their concerns. The variety of communication and engagement channels will help inform, consult, involve, collaborate with, and empower City stakeholders and ensure that our methodology and "stakeholder touch-points" are followed and executed at each study milestone.

We are committed to working closely with City study advisors (Human Resources, City leadership, employee representatives, if any, and other stakeholders) to understand the needs of the mutual constituencies (employees) and to ensure that the Study Project Team, K&A team, management, and any employee representatives meet the highest standards of stakeholder interaction, including communicating clearly, politely, honestly, and promptly, and treating everyone fairly, equally, and with respect.

The communications and engagement plan will enable us to respond to questions or concerns in a timely and professional manner. Our typical communication model includes at least weekly or biweekly written status updates to keep the City informed on where we are for every element of the project. Over the last two years, we have learned that most communication can be managed through email and teleconferences

DocuSign Envelope ID: C702B174-42AA-462D-A780-FF4EF1C0B64F

and that the work we do can be accomplished successfully and, in fact, more efficiently, by performing it virtually and remotely.

In addition, the study includes a significant number of meetings with the Study Project Team, Human Resources, management, study employees, and the City Council, as desired. The meetings and "stakeholder touchpoints" that we recommend ensure understanding of the project parameters, enhance accurate intake and output of information, and improve a collaborative and interactive approach that will result in greater buy-in for study recommendations. This interactive approach, although time-consuming, has resulted in almost 100% implementation success of K&A's studies.

Deliverable B. Orientation Meetings with Employees

We will facilitate orientation meetings with study employees and distribute our Position Description Questionnaire ("PDQ") to start the classification portion of the study. While these meetings are not mandatory, they form the beginning of the educational process that continues throughout the study. We will discuss the importance of the employees' involvement in the study and their participation in PDQ completion and job analysis interviews. Project processes will be explained, expectations will be clarified, and elements that are not a part of the study will also be covered. Questions will be answered and a detailed explanation and examples for completing the PDQ will be given.

The Position Description Questionnaire ("PDQ") will be discussed with the Study Project Team and customized as needed to meet the study objectives prior to distributing copies to employees.

In the past, we have typically conducted these orientation sessions in person, onsite, and at various client locations. We have experience in conducting business virtually and have found that it can be a much more efficient and cost effective approach of our clients. We can provide the City with many technological options to ensure a smooth process, as we have with many of our clients during the last two years. Examples include:

- Orientations: Providing more flexible options for employee orientation sessions by offering fewer options per day over a higher number of days to accommodate employee schedules; onsite meetings require a larger number of daily sessions over a more limited number of days.
- FAQs: Preparing a series of FAQ's for each study which are made available to employees after the orientation sessions.
- Recording meetings: Videotaping our employee orientation sessions (we also do this for onsite sessions) for employees who cannot attend a session; or simply recording a video-conference orientation session that employees could watch later.
- Chat lines: Training our staff on the use of communication tools such as chat lines; we intersperse our employee orientation session presentations with multiple points when questions can be asked.
- Post-meeting help: Remaining in the orientation session for about 5-10 minutes after it has "officially" ended in the event some employees want to stay behind to ask questions.
- Safeguards: For employee interviews, as we generally do, we prepare the schedules of dates and times for each employee and the client coordinates scheduling employees with departments, using agreed upon meeting options for employees. Safeguards are in place to ensure that only the employee/ employees (for group interviews) in that time slot can access the meeting, such as virtual "waiting rooms."
- Telephone support: Providing a direct telephone number for the K&A Project Manager to departments in the event there are scheduling or access issues.

DocuSign Envelope ID: C702B174-42AA-462D-A780-FF4EF1C0B64F

- Time between meetings: Scheduling 10-15 minutes between meetings, versus on-site back-to-back meetings; this change results in slightly fewer meetings per day, but provides a less "hurried" nature to the meetings; and because the meetings are not onsite, clients do not need to reserve multiple meeting rooms for multiple days.

Our clients have received these operational changes very positively. We continue to ask our clients for feedback so we can implement continuous improvements. We recognize not all clients have the same technology as we do, which means we must provide viable technology options. While we provide multiple options, the expertise of our associates in asking relevant and probing questions of each study participant to better understand each employee's work is critical to the job evaluation interview process (see more information regarding employee interviews below). Our client-centric approach and methodology does not change with the venue.

Deliverable C. Collection and Review of PDQs

We recommend giving employees in the same classification the option of collaborating on completing a PDQ together, if the employees so choose. At the same time, we will invite employees to complete an individual PDQ if they prefer and if they wish to be interviewed separately. We provide an electronic version of our questionnaire so that employees can more easily complete it. Employees complete the questionnaire and then send it to their supervisor for review, comment, and signature. We typically require a second level of review by the next level of management in the reporting structure. This ensures that all staff have an opportunity to provide information as to what the nature of the job is for each job classification.

Upon receipt of the PDQs in our office, K&A staff will review and analyze the PDQs in detail along with other documentation to obtain an understanding of the duties and responsibilities assigned to each position.

Deliverable D. Interviews with Employees, Supervisors, and Management

Interviews will be scheduled with employees. Because this is a critical step in the information-gathering and educational process, we typically recommend scheduling interviews with at least one employee, in each classification. We expect that the majority of interviews will be individual. However, we do invite employees in multi-incumbent classifications to choose either individual interviews or to be interviewed together as a group, if the work they perform is sufficiently similar. We want to ensure that the process is designed to make employees feel comfortable to speak openly and to have a voice, whether they prefer to speak with us individually or as a group.

Interviews will then be held with supervisory and management staff (division managers, department heads, etc.), who will clarify their own responsibilities and/or confirm the information we have received in the interviews with their staff (we allow more time for these interviews).

The purpose of the interviews is to clarify and supplement the questionnaire data and to respond to potential perception differences regarding roles, tasks, scope, and supervisory responsibilities. The appropriateness of the following will be assessed:

- Work being completed and relationships of positions to each other within a division/department as well as across the organization; and
- Classification structure and reporting structure.

DocuSign Envelope ID: C702B174-42AA-462D-A780-FF4EF1C0B64F

Deliverable E. Classification Concept and Preliminary Allocation

Prior to developing detailed class descriptions, our job evaluation will result in a classification concept and employee allocation document that will be submitted to the City for review and approval. We will compare changes in business need and operations, as well as any reorganizations, with the established classification system and job families as well as review internal relationships between classifications to define the reasons for, and effects of, the proposed changes.

Our job analysis method is the whole position analysis approach. Objective factors in the whole position job analysis methodology include:

1. Decision making/judgment
2. Difficulty and complexity of work
3. Supervisory responsibilities
4. Non-supervisory responsibilities
5. Minimum qualifications
6. Working conditions/risk factors
7. Contacts

This document will list broad class concepts and highlight where significant changes may be recommended, such as creating or collapsing class series in the same functional area and/or separating or combining classifications assigned to different functional areas. We will review and analyze potential career ladders and promotional opportunities, including clearly delineated and distinguished levels within classification series. We will also review, and update established titling guidelines for the studied classifications for appropriate and consistent titling.

A detailed, incumbent-specific allocation list for each position included in the study will be prepared, specifying current and proposed classification title and the impact of our recommendations (reclassification – upgrade or downgrade, title change, or no change).

After we have completed this process, a meeting will be arranged to review any recommended changes to the classification plan with the Study Project Team and department heads.

Deliverable F. Draft Class Description Development

After preliminary approval of the class concepts and allocation lists, new and/or updated class descriptions will be developed for each proposed classification, following the format approved by the City.

From the review of the PDQs and employee interviews, we will update duties, responsibilities, and minimum qualifications of each class specification, as necessary. We will develop new class specifications if duties, responsibilities, and minimum qualifications have changed significantly, and/or if we recommend new classifications/class levels, and/or if operational changes, business needs, or reorganizations, have occurred.

Following EEO Uniform Guidelines, we will review, analyze, and update, as appropriate, knowledge, skills, abilities, education and experience, position definitions, purpose, distinguishing characteristics, supervision received and exercised, position functions and special requirements including licensing and certifications that are required and desirable. We will address relevance and hierarchical consistency of each classification and each class series.

DocuSign Envelope ID: C702B174-42AA-462D-A780-FF4EF1C0B64F

We will also review and update physical demands based on the most typical job functions of each classification in accordance with the ADA.

Finally, we will review each classification's typical job functions and determine exempt vs. non-exempt status in accordance with "white collar" exemptions under the FLSA.

Deliverable G. Facilitation of Draft Class Description Review and Employee Feedback Process

A draft copy of the revised/new class description with allocation recommendation will be submitted to the Project Team and subsequently to each department head so they may provide comments and concerns regarding any modifications to the classification structure and specifications.

Deliverable H. Classification Plan and Draft of Interim Report and Final Report

A Draft Interim Report of the Classification Study will be completed and submitted to the Study Project Team for review and comment. The report will contain:

- Classification recommendations for each studied position, including documentation regarding study goals and objectives, classification methodology, approach, and process as well as all findings, analysis, and resulting recommendations;
- The recommended allocation list, classification title changes, job family and career ladder/career growth issues, reporting relationships, and other factors will all be included;
- The recommended classification structure will be in alignment with current business/ operational needs of the City; and
- Classification concepts and guidelines as well as methods used to determine appropriate classification and level, methods for logical progression of movement between classifications, distinguishing characteristics and other pertinent information for implementation and continued maintenance of the recommendations will be detailed.

Once we have received the City's comments regarding the Draft Interim Report and have made any necessary changes, a Final Classification Report will be developed.

PHASE II: TOTAL COMPENSATION STUDY

Deliverable A. List of Comparator Agencies, Benchmark Classifications, and Benefits to be Collected

During the initial meeting with the Study Project Team, we will discuss and agree to the compensation study factors. We will confirm appropriate, logical and defensible comparator agencies that will be included in the external market survey, which will be the foundation for ensuring that the City's salaries for the studied classifications are competitively aligned with the external labor market. We will also confirm those classifications that will be surveyed in the market (i.e., benchmark classifications), with the intention of internally aligning the remaining classifications with those that were surveyed.

Finally, we will determine the list of benefits that the City wants to include in the total compensation data gathering process.

1. Determination of Comparator Agencies

The selection of comparator agencies is a critical step in the study process. It is our understanding that the City has bargaining unit agreements which stipulate agencies to be used in surveys, and the budget proposed for this study assumes up to 12 comparator agencies. We typically use the

DocuSign Envelope ID: C702B174-42AA-462D-A780-FF4EF1C0B64F

following factors to identify appropriate comparators and will receive approval before proceeding with the total compensation study.

Our recommended methodology is that we involve management, Human Resources, employee representation, and the City Council, in the decision-making process of selecting which comparable agencies are included, **PRIOR** to beginning the study. Our experience has shown that this is the most successful approach. The factors that we typically review when selecting and recommending appropriate comparator agencies include:

- ***Organizational type and structure*** – While various organizations may provide overlapping services and employ some staff having similar duties and responsibilities, the role of each organization is somewhat unique, particularly in regard to its relationship to the citizens it serves and level of service expectation. During this iterative process, the City's current/ previous list of comparators, if any, and the advantages/disadvantages of including them or others would be discussed.
- ***Similarity of population served, City demographics, City staff, and operational budgets*** – These elements provide guidelines in relation to resources required (staff and funding) and available for the provision of services.
- ***Scope of services provided*** – While having an organization that provides all of the services at the same level of citizen expectation is ideal for comparators, as long as the *majority* of services are provided in a similar manner, sufficient data should be available for analysis. When reviewing this factor, the City's unique services would be evaluated in order to ensure that the majority of comparators provide the same services. This ensures that each comparator yields a sufficient number of matches for the City's jobs.
- ***Labor market*** – The reality of today's labor market is that many agencies are in competition for the same pool of qualified employees, because large portions of the workforce don't live in the communities they serve, are accustomed to lengthy commutes, and are more likely to consider changing jobs in a larger geographic area than in the past. Therefore, the geographic labor market area (where the City may be recruiting from or losing employees to) is taken into consideration when selecting potential comparator organizations. As part of this analysis, we will determine whether the City has identified agencies that it competes with for qualified talent; those agencies are taken into consideration for purposes of our analysis. It is important to understand and consider the City's competitive landscape and include agencies in the study to whom the City loses talent.
- ***Cost-of-living*** – The price of housing and other cost-of-living related issues are some of the biggest factors in determining labor markets. We review overall cost-of-living of various geographic areas, median house prices, and median household incomes to determine the appropriateness of various potential comparator agencies.

We typically recommend using 10-12 comparator agencies for all survey benchmarks in order to achieve statistical significance but are flexible and can easily use a different approach based on the City's preferences.

2. Determination of Benchmark Classifications

In the same collaborative manner as described in Step 1 above, we will work with the City's stakeholders to select those classifications that will be surveyed.
"Benchmark classes" are ordinarily chosen to reflect a broad spectrum of class levels. In addition, those that are selected normally include classes that are most likely to be found in other similar

DocuSign Envelope ID: C702B174-42AA-462D-A780-FF4EF1C0B64F

agencies, and therefore provide a sufficient valid data sample for analysis. Internal relationships will be determined between the benchmarked and non-benchmarked classifications and internal equity alignments will be made for salary recommendation purposes. Due to the fact that the labor market typically yields reliable data, we recommend using approximately 60-65% of all classifications as benchmarks but we are happy to use a different model.

3. Determination of Salary and Benefits Data to Be Collected

In addition to base salaries, benefit data elements for a total compensation study normally include at least the following (which are generally available to all staff in a specific job classification):

- **Monthly Salary –** The top of the normal, published salary range. All figures are presented on a monthly or annual basis. We normalize the salary data to reflect number of hours in the work week and/or roll-up of retirement or other benefits in base salaries.
- **Employee Retirement –** This includes two figures: the amount of the employee's State or other public or private retirement contribution that is contributed by the agency and the amount of the agency's Social Security contribution.
- **Insurance –** This typically includes Health, Dental, Vision, and other insurance coverage.
- **Leave –** Other than sick leave, which is usage-based, leave is the amount of days off for which the organization is obligated. We will discuss with the City whether leave days/hours should be converted to direct salary cost in dollars or represented in days/hours.
    - **Vacation:** The number of vacation days available to all employees after five years of employment.
    - **Holidays:** The number of holidays (including floating) available to the employee on an annual basis.
    - **Administrative/Personal Leave:** Administrative leave is normally the number of days available to management staff to compensate for the lack of payment for overtime. Personal leave may be available to other groups of employees to augment vacation or other time off.
- **Deferred Compensation –** We report any employer contribution made on the employee's behalf, whether dollar amount or percentage of salary, which does not require an employee-matching contribution. We can also report employer contributions that do require an employee match and would do so as a separate report.
- **Other –** This category includes any other benefits that are available to all employees within a classification and not already specifically detailed.

Deliverable B. Data from Comparators and Preliminary Analysis of Data

K&A does not collect market compensation data by merely sending out a written questionnaire. We find that such questionnaires are often delegated to the individual in the department with the least experience in the organization and given a low priority. Our experienced compensation analysts conduct all of the data collection and analysis to ensure validity of the data and quality control. This approach also ensures that we compare job description to job description and not just job titles, therefore ensuring true "matches" of at least 70%, which is the percentage we use to determine whether to include a comparator classification or not.

As mentioned above in the Classification methodology, our job analysis method is the whole position analysis approach.

DocuSign Envelope ID: C702B174-42AA-462D-A780-FF4EF1C0B64F

We typically collect classification descriptions, organization charts, salary schedules, personnel policies, budgets, master plans, operational information, MOUs, and other information via website, by telephone, or by an onsite interview. With the prior knowledge from the data gathered directly from each comparator agency and our experience in the public sector human resources field, our compensation analysts make preliminary "matches" and then schedules appointments by telephone, or sometimes in person, with knowledgeable individuals to answer specific questions. We find that information collected using these methods has a very high validity rate and allows us to substantiate the data for employees, management, and governing bodies.

Data will be entered into spreadsheet format designed for ease of interpretation and use. The information will be presented in a format that will identify the comparator positions used for each classification comparison. Information will be calculated based upon both average and median figures allowing the City to make informed compensation decisions. Other elements of the compensation survey report are agencies surveyed; comparable class titles; salary range maximum/control point; number of observations; and percent of the City's salary range is above/below the market values.

In addition, we will include any type of statistical representation and analysis that the City desires such as 60th, 70th, or any other percentiles per the City's compensation philosophy.

Benefits data will be displayed in an easy-to-read format. You will receive three sets of spreadsheets per classification, one with base pay, one with the benefits detail, and one with total compensation statistical data. In addition, we are often asked to collect "other" benefits (as listed in the benefits section above), which we typically report on a separate spreadsheet.

Deliverable D. Draft Compensation Findings/Additional Analysis/Study Project Team Meetings

As part of our transparent approach and communication strategy to ensure organizational buy-in to the study, we share the market survey with the organization. We first distribute our draft findings to the Study Project Team. After their preliminary review, K&A will meet with the Study Project Team and other stakeholders (including Human Resources, management, employees) to clarify data, to receive requests for reanalysis of certain comparators, and to answer questions and address concerns. This provides an opportunity for the Study Project Team and other stakeholders to review and question any of our recommended benchmark comparator matches. If questions arise, we conduct follow-up analysis to reconfirm our original analysis and/or make corrections as appropriate.

Deliverable E. Analysis of Internal Relationships and Alignment

To determine internal equity for all studied positions, considerable attention will be given to this phase of the project. It is necessary to develop an internal position hierarchy based on the organizational value of each classification. Again, we utilize the whole position analysis methodology as described earlier.

By reviewing those factors, we will make recommendations regarding vertical salary differentials between classes in a class series, for example, as well as across departments. This analysis will be integrated with the results of the compensation survey and the City's existing compensation plan.

The ultimate goal of this critical step in the process is to address any potential internal equity issues and concerns with the current compensation system, including compaction issues between certain classifications. We will create a sound and logical compensation structure for the various levels within each class series, so that career ladders are not only reflected in the classification system but also in the compensation system, with pay differentials between levels that allow employees to progress on a clear

DocuSign Envelope ID: C702B174-42AA-462D-A780-FF4EF1C0B64F

path of career growth and development. Career ladders will be looked at vertically, as well as horizontally, to reflect the City's classification structure that was developed during the classification phase of the study, and to identify/resolve any compaction issues.

Deliverable F. Compensation Structure

Depending on data developed as a result of the internal analysis, we will review and make recommendations regarding internal alignment and the salary structure (set of salary ranges, salary differentials, steps within ranges, and/or alternative compensation plans) within which the classes are allocated, based upon the City's preferred compensation model. In addition, we will develop externally competitive benefit comparisons for all classifications.

We will conduct a competitive pay analysis using the market data gathered to assist in the determination of external pay equity and the recommendation of a new base compensation structure, if desired. We will conduct a comparative analysis to illustrate the relationships between current pay practices and the newly determined market conditions and develop solutions to address pay equity issues, analyze the financial impact of addressing pay equity issues, and create a market adjustment implementation strategy supporting City goals, objectives, and budget considerations.

Draft recommendations will be discussed with the Study Project Team and management for discussions and decisions on overall pay philosophy and the practicality of acceptance and prior to developing an Interim Report.

Deliverable G. Final Report and Guidelines for Implementation

Volume II (Draft Interim Report of the Compensation Study) will be completed and submitted to the Study Project Team for review and comment. The report will provide detailed compensation findings, documentation, and recommendations. The report will include:

- An executive summary of the compensation study results;
- A set of all market data spreadsheets;
- A proposed Salary Range Placement document;
- A procedure to address employees whose base pay exceeds the maximum of their newly assigned pay range;
- Implementation issues and cost projections surrounding our recommendations; and
- A guide for rules, policies and procedures for the City in implementing, managing and maintaining the compensation system, as appropriate.

Once all of the City's questions/concerns are addressed and discussed, a Final Classification and Compensation Report will be created and submitted in the City's preferred format. The Final Report will incorporate any appropriate revisions identified and submitted during the review of the draft report.

Deliverable H. Formal Appeals Process

Should the City have a formal appeals process regarding the allocation of positions to classifications and of classifications to salary ranges, this proposal does not cover time regarding a formal appeal process. As mentioned above, however, our internal process usually addresses any of these issues.

Deliverable I. Final Presentation

Our proposal includes multiple meetings and weekly oral and written status/progress updates to the Study Project Team and a final presentation to the team, department heads, and the City Manager.

DocuSign Envelope ID: C702B174-42AA-462D-A780-FF4EF1C0B64F

❖ Expectations of City Support:

In order to conduct this study in the most timely and cost-effective manner, we ask for support in the following areas:

- Timely provision of written documentation, such as current class specifications, union contracts, organizational charts, budget documents, requests for audits, past studies, etc.;
- Assistance in the notification and scheduling of orientation and other meetings and the provision of adequate interview space and resources;
- Assistance in the compilation of current descriptions with the PDQ; collecting and forwarding questionnaires; and in ensuring that materials are complete and returned in a timely manner;
- Assistance in scheduling study project team, bargaining unit, management, employee audit, and other meetings; and
- Meeting agreed-upon timelines.

In terms of time commitment for City staff, we understand that the City hires an outside consultant to conduct and coordinate the entire effort. Therefore, it is our goal to reduce the time commitment of City staff as much as possible and to only request assistance in the coordination of some of the steps in the process, such as scheduling employee orientation meetings, duplicating PDQs, scheduling employee interviews/desk audits, disseminating information, and in general, being a channel of communication between our firm and employees.

❖ Communication with the City:

Our typical communication model includes at least weekly or biweekly written status updates to keep the City informed on where we are during each phase of the project.

In addition, the study includes a significant number of meetings with the Study Project Team, human resources, management, employees, and other stakeholders, as desired. The meetings and "stakeholder touch-points" that we recommend ensure understanding of the project parameters, enhance accurate intake and output of information, and foster a collaborative and interactive approach that will result in greater buy-in for study recommendations. This interactive approach, although time-consuming, has resulted in almost 100% implementation success of K&A's studies.

❖ Post-Implementation Consultation and Support:

We are committed to providing the City with the highest-quality product and service. Providing ongoing consultation and support after study implementation is a service that is included in our professional fees and a continued relationship-building aspect of our client relationship that we highly value.

We often find that clients will call or email with follow-up questions and to discuss certain aspects of the study, ask why decisions and recommendations were made, and other important components of the study. We consider post-implementation support as part of our customer service.

Should the City request any additional onsite meetings and/or training after implementation of the study and/or other specific, identifiable work efforts, such as position reclassification studies, creating new class descriptions, or conducting annual surveys, we would honor our composite hourly rate for actual hours spent at the City. However, from experience, we expect that most follow-up support will be conducted via telephone, email and is absolutely included in our "Not To Exceed Fee" for this project.

DocuSign Envelope ID: C702B174-42AA-462D-A780-FF4EF1C0B64F

❖ Stakeholder Engagement:

The meetings and communications with stakeholders that we recommend ensure understanding of the project parameters, enhance accurate intake and output of information, and encourage a collaborative and interactive approach that will result in greater buy-in for study recommendations. This interactive approach, although time-consuming, has resulted in almost 100% implementation success of K&A's studies.

We believe in an interactive and collaborative process with the whole organization and in a high level of stakeholder contact and interaction to ensure organizational buy-in of the study throughout the entire process. Following are the major milestones at which we touch base with Human Resources, employees, managers, employee representation, and other stakeholders, as appropriate:

- Initial study kick-off and employee/management orientation meetings;
- PDQ completion and review;
- Employee and management interviews;
- Management, and Human Resources review of draft class descriptions;
- Contact with management to address final classification issues;
- Stakeholder input regarding a list of appropriate comparator agencies, benchmark classifications, and benefits to be collected;
- City stakeholder review of compensation study data and contact with them to address any challenges to the market comparables we identified for each classification;
- Stakeholder input on internal salary relationship analysis and recommendations; and
- Stakeholder input regarding final compensation plans and structure recommendations.

These steps will ensure that the study results in a product that is accepted and trusted by all levels within the organization. Beyond sound mechanics, our approach includes sufficient communication steps to ensure that the study methodology is understood and the results are regarded as expert, impartial, and fair.

DocuSign Envelope ID: C702B174-42AA-462D-A780-FF4EF1C0B64F

TIME REQUIREMENTS

Our professional experience is that classification and compensation studies of this scope and for this size organization take approximately eight months to complete, allowing for adequate PDQ completion, interview time, classification description review and/or development, compensation data collection and analysis, review steps by the City, the development of final reports, any appeals, and presentations.

The following is a suggested timeline (which can be modified based on the City's needs):

Deliverables	Phase I - Classification Study	Completion
A.	Meetings with Study Project Team and Management Staff and Initial Documentation Review	Week 1
B.	Orientation Meetings with Employees and Distribution of PDQ	Week 3
C.	Collection and Review of PDQs	Week 9
D.	Interviews with Employees, Supervisors, and Management; Position Allocations for Study Employees	Week 12
E.	Meetings with Department Heads re Final Recommendations	Week 16
F.	Draft Class Description Development	Week 22
G.	Facilitation of Draft Class Description Review	Week 24
H.	Classification Plan and Draft of Interim Report and Final Report	Week 32
I.	Final Presentation	As Scheduled
Deliverables	**Phase II – Total Compensation Study**	**Completion**
A.	List of Comparator Agencies and Benchmark Classifications	Week 3
B.	Data Collection, Analysis and Preliminary Data Review	Week 20
C.	Draft Compensation Findings and Meeting with Project Team	Week 22
D.	Internal Job Analysis	Week 26
E.	Compensation Structure Development	Week 26
F.	Preparation of Draft Final and Final Report and Deliverables	Week 32
G.	Final Presentation	As Scheduled

DocuSign Envelope ID: C702B174-42AA-462D-A780-FF4EF1C0B64F

COST PROPOSAL

We have often found our process requires a very high level of time commitment, which sometimes results in a higher proposal cost. We believe that our methodology and implementation success rate is attributable to the significantly greater level of contact we have with employees, employee representation, management, and the governing body. The time we commit to working with the employees (orientations and briefings, meetings with employees via personal interviews, sharing of compensation survey data, management review and feedback processes, etc.) results in significantly greater buy-in throughout the process and no formal appeals at the end of the study.

In fact, our firm has only had a handful of formal appeals to any of our studies in our 39 years in business. It has been our experience that the money and time invested in stakeholder communication throughout the study are money and time saved during implementation. Numerous times our firm has been hired after an agency has gone through an unsuccessful study whose results were rejected or appealed and whose implementation was very controversial. The result was a divided organization with hostility and animosity between employees/employee representation and management. Whenever our firm was hired after such an unfortunate experience, study stakeholders were amazed at our open and all-inclusive process, our efforts to elicit equal stakeholder input, and our development of recommendations that were accepted as fair and reasonable and understood by management, employees, and the governing body. Our success rate is also attributable to the fact that we have 39 years of experience working with employees of all types of backgrounds, educational levels, and work experiences, and we are accustomed to successfully communicating with and educating them throughout the process.

Over the last few years, K&A and all our clients have become accustomed to conducting our organizational, classification, and compensation studies virtually. From that experience, we have learned that studies can be conducted successfully by using virtual technologies and performing the work remotely. We have also learned that this represents a significant cost savings for our clients, both in terms of consultant travel time and travel expenses, as well as less disruption and reduced non-productivity for the client's workforce. We have several technological solutions that can easily facilitate the entire process (see proposal narrative above). Conducting meetings and orientations virtually means that the client's employees do not have to spend time traveling from one location to another and will not be pulled away from their workstations for lengthy periods of time. They can simply click on a link or call in from a phone to participate. This approach also represents significantly less logistical planning on part of the client in order to reserve meeting rooms and making space available for large employee groups, as well as multiple consultants coming onsite to conduct interviews within a condensed period of time. Conducting orientations and interviews virtually provides us with much more flexibility in scheduling and accommodating multiple different shifts and schedules among a large workforce.

In addition, K&A strives to be as "green" an organization as possible and we are certainly concerned about our carbon footprint. We find that multiple trips to client sites that can sometimes involve multiple consultants flying on planes and/or driving cars, is not as environmentally conscious as we would like to be. Considering the effectiveness of virtual meetings, especially when meetings are only one hour or one-and-a-half hours at a time, onsite travel does appear to create a larger footprint than necessary. This can especially be true for final presentations to leadership teams and governing bodies that are often less than 60, or even 30, minutes long.

DocuSign Envelope ID: C702B174-42AA-462D-A780-FF4EF1C0B64F

For purposes of this cost proposal, we are assuming that all meetings and presentations will be conducted virtually/remotely and no onsite travel to City offices will occur. Should the City desire onsite meetings, we will be happy to provide our per diem cost for onsite meetings based on travel time and market rate travel cost at the time.

Task/ Deliverable	Phase I - Classification Study Estimated No. of Positions to be Reviewed – 138	Cost
A.	Meetings with Study Project Team and Management Staff and Documentation Review	$1,480
B.	Orientation Meetings with Employees and Distribution of PDQs; *note that PDQ's will be short version to facilitate completion* and that 138 positions have been identified as requiring this level of review (see Attachment A); where possible we will use focus group sessions in Public Works (no new PDQ's required for this group but we will review those from the original study) and Recreation and Human Services	$4,440
C.	Collection and Review of PDQs - based on 130 PDQ's to be reviewed	$7,400
D.	Interviews with Employees, Supervisors, and Management- based on an interview rate of 80% - or a total of 120 employees, using group/focus group sessions where needed; the budget for this task includes allocations for proposed study positions in Appendix A only. Current employees who did not complete a PDQ (including those who joined the City after the initial study) will be placed in the most relevant classification recommended in the original study and/or will be assigned to the same classification as their current peers. New classification specifications and/or changed allocations will be provided only for the total number of positions identified in Appendix A.	$28,860
E.	Meetings with Department Heads to Discuss Original Classification Plan and Concepts and Extent of Final Recommended Classifications – research and resolve classification and allocation recommendation issues.	$8,510
F.	Draft Class Description Development ***Completed:*** *We have developed 77 of the original 103 classifications recommended from the 2019; based on department feedback, we anticipate another 60 will need to be prepared (for a total of 137); and some modification of the original 77 will be needed.* ***Work to be done:*** *Develop approximately 60 new classification specifications; minor revisions to 77 classification specifications*	$37,370
G.	Facilitation of Draft Class Description Review and Feedback Process ***Proposed work:*** *We recommend working with HR and Management to review all 134 classifications; due to the amount of time that has passed, we anticipate this process to take a more significant amount of time, i.e., approximately one hour per classification.* ***Not included:*** *At this time, we are not budgeting time to work with individual employees to receive feedback from them regarding the new classifications,*	$24,790

DocuSign Envelope ID: C702B174-42AA-462D-A780-FF4EF1C0B64F

Task/ Deliverable	Phase I - Classification Study Estimated No. of Positions to be Reviewed – 138	Cost
	we anticipate that the City would handle that; this is due to the fact that 165 have left the City since the last study and 87 employees are new. If the City would like our assistance, we would do this work at our standard hourly rate.	
H.	Classification Plan and Draft of Interim Report and Final Report	$6,660
I.	Final Presentation (virtual meeting)	$740
	Additional unanticipated meetings with study stakeholders	$1,850
	Total Classification Project Fee	**$122,100**
	Combined professional and clerical composite total	**$122,100**
Task/ Deliverable	**Phase II - Compensation Study**	**Cost**
A.	Initial Documentation Review, Meetings with Study Project Team and Management Staff	$2,220
B.	List of Comparator Agencies, Benchmark Classifications, and Benefits to Be Collected	$2,960
C.	Data Collection, Analysis and Preliminary Data Review *Up to 75 benchmarks, up to 12 comparator agencies, **total compensation**, including benefits*	$55,500
D.	Draft Compensation Findings and Meeting with Project Team	$12,800
E.	Internal Job Analysis	$2,220
F.	Compensation Structure Development	$2,960
G.	Preparation of Draft Final and Final Report and Deliverables	$2,960
H.	Final Presentation (Virtual)	$1,110
	Anticipated hours for additional unscheduled meetings and phone calls	$1,110
	Combined professional and clerical composite total	**$83,840**
	Expenses are **included** in the composite hourly rate:	**N/A**
	Expenses include but are not limited to duplicating documents, binding reports, phone, supplies, postage, parking, meals, travel time, etc.	
	TOTAL PROJECT COST NOT TO EXCEED:	**$205,940**

Our cost proposal does not include time to support the City during any labor negotiations that may follow this study. If we are needed for this work, our composite hourly rate will apply and we will charge on a time-and-materials basis.

DocuSign Envelope ID: C702B174-42AA-462D-A780-FF4EF1C0B64F

Billing Structure

The following is how the City will be invoiced upon the completion of each milestone:

Milestone	Phase I - Classification Deliverables	Amount
Milestone #1	10% of total project fee will be charged upon execution of the contract	**$12,210**
Milestone #2	Completion of Deliverables A, B, C and D	**$37,962**
Milestone #3	Completion of Deliverables E and F	**$41,292**
Milestone #4	Completion of Deliverable G	**$22,311**
Milestone #5	Remainder of project fee upon delivery of final report - Deliverables H and I, and additional meeting fee	**$8,325**
Milestone	**Phase II - Compensation Deliverables**	**Amount**
Milestone #1	10% of total project fee will be charged upon execution of the contract	**$8,384**
Milestone #2	Completion of Deliverables A, B, and C	**$54,612**
Milestone #3	Remainder of project fee upon delivery of final report – Deliverables D, E, F, G and H and additional meetings	**$20,844**
	TOTAL:	**$205,940**

DocuSign Envelope ID: C702B174-42AA-462D-A780-FF4EF1C0B64F

CONTRACTUAL CONSIDERATIONS

We will be pleased to sign the City's professional services agreement for a Classification and Compensation Study. We respectfully request that the City will allow for a period of negotiation of certain terms in the professional services contract related to liability, indemnity, insurance, and other terms. We have found that we have always come to an agreement with all of our clients in the past and appreciate the City's flexibility in reviewing certain terms in a collaborative fashion between our legal counsels.

It is our practice to provide the coverage below in lieu of the City contract insurance language. We therefore propose to replace the insurance language in the RFP's sample agreement with coverage language provided by Gallagher as follows (we attach our Memorandum of Insurance for your review as well):

Gallagher shall at all times during the term of this Agreement and for a period of two (2) years thereafter, obtain and maintain in force the following minimum insurance coverages and limits at its own expense:

- Commercial General Liability (CGL) insurance on an ISO form number CG 00 01 (or equivalent) covering claims for bodily injury, death, personal injury, or property damage occurring or arising out of the performance of this Agreement, including coverage for premises, products, and completed operations, on an occurrence basis, with limits no less than $2,000,000 per occurrence;
- Workers Compensation insurance with statutory limits, as required by the state in which the work takes place, and Employer's Liability insurance with limits no less than $1,000,000 per accident for bodily injury or disease. Insurer will be licensed to do business in the state in which the work takes place;
- Automobile Liability insurance on an ISO form number CA 00 01 covering all hired and non-owned automobiles with limit of $1,000,000 per accident for bodily injury and property damage;
- Umbrella Liability insurance providing excess coverage over all limits and coverages with a limits no less than $10,000,000 per occurrence or in the aggregate;
- Errors & Omissions Liability insurance, including extended reporting conditions of two (2) years with limits of no less than $5,000,000 per claim, or $10,000,000 in the aggregate;
- Cyber Liability, Technology Errors & Omissions, and Network Security & Privacy Liability insurance, including extended reporting conditions of two (2) years with limits no less than $2,000,000 per claim and in the aggregate, inclusive of defense cost; and
- Crime insurance covering third-party crime and employee dishonesty with limits of no less than $1,000,000 per claim and in the aggregate.
- All commercial insurance policies shall be written with insurers that have a minimum AM Best rating of no less than A-VI, and licensed to do business in the state of operation. Any cancelled or non-renewed policy will be replaced with no coverage gap, and a Certificate of Insurance evidencing the coverages set forth in this section shall be provided to Client upon request.

DocuSign Envelope ID: C702B174-42AA-462D-A780-FF4EF1C0B64F

Signature Page

Koff & Associates intends to adhere to all of the provisions described above.

This proposal is valid for 90 days.

Respectfully submitted,

By: KOFF & ASSOCIATES
State of California

Georg S. Krammer **November 15, 2023**
Managing Director, Compensation and Rewards Consulting

Koff & Associates
A Gallagher Company

DocuSign Envelope ID: C702B174-42AA-462D-A780-FF4EF1C0B64F

APPENDIX A

K&A Staff Resumes

DocuSign Envelope ID: C702B174-42AA-462D-A780-FF4EF1C0B64F

Key Personnel Biographies

Georg S. Krammer, M.B.A., S.P.H.R.
Managing Director

Georg brings over 22 years of management-level human resources experience to Koff & Associates with an emphasis in classification and compensation design; market salary studies; organizational development; executive recruitment; performance management; and employee relations, in the public sector and in large corporations as well as small, minority-owned businesses.

After obtaining a Master of Arts in English and Russian and teaching credentials at the University of Vienna, Austria, Georg came to the United States to further his education and experience and attained his Master of Business Administration from the University of San Francisco. After starting his HR career in Wells Fargo's college recruiting department, he moved on to HR management positions in the banking and high-tech consulting industries. He had five years in the private sector where he served as an HR Manager, and Administrative Officer, and then HR Director before entering the public sector. With his wide-ranging and deep experience as a well-rounded senior HR generalist, his education in business and teaching, his depth and breadth of experience with public sector HR needs, programs, and functions, Georg's contribution to K&A's variety of projects greatly complements the Koff & Associates Human Resources and Recruitment Services team.

He has spearheaded several hundred classification, compensation, organizational, strategic planning, etc., studies for hundreds of cities, towns, counties, and special districts throughout the State of California and has contributed to more than quadrupling the size of Koff & Associates as a result of the success of his projects and the subsequent expansion of the business through referrals from satisfied clients. Georg joined K&A in 2003 and has been the firm's Chief Executive Officer since 2005.

In the last few years, Georg has been the Project Director/Key Personnel for classification and/or compensation studies, organizational assessments, and other HR projects, at the following agencies:

- **Cities/Towns:** Alameda, American Canyon, Anaheim, Arroyo Grande, Bellflower, Campbell, Citrus Heights, Coachella, Concord, Cotati, Gilroy, La Cañada Flintridge, Lomita, Los Altos, Los Altos Hills, Menifee, Menlo Park, Morro Bay, Murrieta, National City, Newport Beach, Oakland, Oxnard, Palm Desert, Perris, Pleasant Hill, Port Hueneme, Redlands, Redwood City, Sacramento, San Diego, San Jose, San Marino, Santa Ana, Santa Barbara, Santa Clara, Saratoga, Sausalito, Seal Beach, Spokane (Washington), Vallejo, West Sacramento, Westminster, Yucca Valley, Yreka
- **Counties**: Bernalillo (New Mexico), Fresno, Monterey, Orange, Placer, San Joaquin, Sonoma, and Trinity.
- **Courts**: Habeas Corpus Resource Center, Superior Court of Kern County, Superior Court of Orange County, Superior Court of Santa Barbara.
- **Education**: College of the Sequoias, Excelsior Charter Schools, First 5 Alameda, Foothill-De Anza Community College District, Riverside Community College District, West Valley Mission Community College District.
- **Special Districts**:
  - Air Quality: Monterey Bay Air Resources District, South Coast Air Quality Management District
  - Community Services District: Cosumnes CSD, Desert Recreation District, Hayward Area Recreation and Park District, Helendale Community Services District, Heritage Ranch Community Services District, Incline Village General Improvement District, Phelan-Pinon Hills Community Services District, Town of Discovery Bay CSD, Truckee Donner Recreation & Park District, Tualatin Hills Park & Recreation District

DocuSign Envelope ID: C702B174-42AA-462D-A780-FF4EF1C0B64F

- Fire and Police Protection: East Contra Costa Fire Protection District, Orange County Fire Authority, Sacramento Metropolitan Fire District
- Housing/Economic Development: Alameda Housing Authority, Housing Authority of the City of San Buenaventura, Housing Authority of the County of Alameda, Housing Authority of County of Santa Barbara, Housing Authority of County of San Luis Obispo, Oakland Housing Authority, Santa Clara County Housing Authority, San Bernardino County Housing Authority
- Open Space: Local Agency Formation Commission (LAFCO) of Santa Clara County
- Public Utilities: East Bay Municipal Utility District, Inland Empire Utilities Agency, North Tahoe Public Utility District, Southern California Public Power Authority
- Transportation: Alameda County Transportation Commission, El Dorado County Transit Authority, Golden Gate Bridge Highway and Transportation District, Livermore Amador Valley Transit Authority, Long Beach Transit, Marin Transit District, Metropolitan Transportation Commission, Ontario International Airport, Orange County Transportation Authority, Port of Hueneme, Port of Long Beach, Port of Oakland, Riverside County Transportation Commission, Sacramento Area Council of Governments, Sacramento Regional Transit District, San Bernardino County Transportation Authority, San Bernardino International Airport, San Francisco Bay Area Water Emergency Transportation Authority, Santa Barbara County Association of Governments, Santa Clara Valley Transportation Authority, Sonoma-Marin Area Rail Transit, Transportation Corridor Agencies, Western Riverside Council of Governments
- Wastewater: California Association of Sanitation Agencies, Central Marin Sanitation Agency, Encina Wastewater Authority, Leucadia Wastewater District, Napa Sanitation District, Ojai Valley Sanitary District, Orange County Sanitation District, Oro Loma Sanitary District, Truckee Sanitary District, Union Sanitary District, Vallejo Flood and Wastewater District
- Water: Bay Area Water Supply & Conservation Agency, Beaumont Cherry Valley Water District, Central Coast Water Authority, Cucamonga Valley Water District, Eastern Municipal Water District, Joshua Basin Water District, Marina Coast Water District, Metropolitan Water District of Southern California, Min-Peninsula Water District, Mojave Water Agency, Monte Vista Water District, Mt. View Sanitary District, Oakwood Lake Water District, Paradise Irrigation District, Rancho California Water District, San Bernardino Valley Water Conservation District, Santa Clarita Valley Water Agency, Sonoma County Water Agency, South Coast Water District, State Water Contractors, Sweetwater Authority, Trabuco Canyon Water District, Vallecitos Water District, Valley County Water District, West Basin Municipal Water District, Western Municipal Water District, Zone 7 Water Agency
- Other: Cooperative Agricultural Support Services Authority, Los Angeles County Employees Retirement Agency, Orange County Mosquito & Vector Control District

Debbie Owen, CCP
Project Manager

Debbie has over 28 years of experience providing classification and compensation services to public sector clients spanning local government sectors including cities, counties, special districts, and transit agencies. Prior to beginning her public sector career, Debbie worked as a Compensation and Benefits Specialist in the private sector for five years.

In 1992, Debbie obtained her certification as a Certified Compensation Professional (“CCP”) from the American Compensation Association (now *WorldatWork*); to ensure current knowledge of compensation and benefits program trends and best practices, she maintains active membership in the *WorldatWork* organization.

DocuSign Envelope ID: C702B174-42AA-462D-A780-FF4EF1C0B64F

Debbie's practitioner and project management experience has been primarily focused on the design and development of classification and compensation programs for a diverse range of public sector clients with varying project needs. For the last 20 years, Debbie has served in a project management capacity, working with clients to evaluate their classification and compensation systems and needs; she directs and reviews the work of project teams to provide clients with high quality deliverables consistent with best practices; and she prepares/delivers presentations designed to inform clients on study processes, activities, methodologies and outcomes.

Since joining K&A, Debbie has worked on classification and/or compensation studies, organizational assessments, and other HR projects for the following agencies, either as Co-Project Director or as a Project Manager:

- **Cities/Towns:** Bakersfield, Campbell, Coachella, Davis, El Monte, Gardena, Hemet, Long Beach, Murrieta, National City, Newman, Palm Desert, San José, Redwood City, Santa Clara, Seattle (WA), Spokane (WA), West Sacramento, Yreka.
- **Counties:** Contra Costa, El Dorado, Fresno, Humboldt, Mendocino, Sonoma, Trinity.
- **Education:** Los Angeles Unified School District, Riverside Community College District Victor Valley Community College District, Yuba Community College District.
- **Special Districts:**
    - Community Services Districts: El Dorado Hills Community Services District, Livermore Area Recreation and Parks District.
    - Housing/Economic Development: Housing Authority of the County of San Bernardino, Housing Authority of Santa Clara County, Los Angeles County Development Agency (LACDA), San Diego Housing Commission.
    - Public Utilities: Sacramento Municipal Utility District.
    - Transportation: AC Transit, El Dorado County Transit Authority, Port of Oakland, San Francisco Bay Area Water Emergency Transportation Authority, Bay Area Rapid Transit (BART), Orange County Transportation Authority (OCTA), San Mateo County Transit District.
    - Wastewater/Water: Beaumont-Cherry Valley Water District, Coachella Valley Water District, Cucamonga Valley Water District, Eastern Municipal Water District, Inland Empire Utility District, Leucadia Wastewater District, Napa Sanitation District, Sammamish Plateau Water District (WA), Sonoma County Water Agency, State Water Contractors, Sweetwater Authority, Trabuco Canyon Water District, Truckee Sanitary District, Western Municipal Water District.
- **Other:** California State Auditor's Office, Contra Costa County Employee Retirement Association, Orange County Mosquito and Vector Control District, Tri-City Mental Health Authority.

Debbie will serve as the Co-Project Director for this study; together with Georg, she will coordinate all of K&A's efforts, will attend all meetings with the City, and will be responsible for all work products and deliverables.

Kari Mercer, SPHR
Project Manager

Kari has over 13 years of human resources experience serving on staff for private and public sector organizations in addition to serving in a consulting capacity. Her experience includes work in classification

DocuSign Envelope ID: C702B174-42AA-462D-A780-FF4EF1C0B64F

and compensation, labor relations, MOU administration, policy development and administration, recruitment and examination, and general human resources administration.

As a human resources consultant, Kari has specialized in managing and conducting a diverse range of classification and compensation studies for public sector agencies throughout California and agencies in Arizona, New Mexico, Texas, and Maryland. As a project manager, she provides leadership to project teams and works closely with client stakeholder groups to ensure quality deliverables and successful project outcomes.

Since joining Koff & Associates, Kari has worked on a wide variety of classification and compensation projects for the following agencies:

- **Cities/Towns:** Anaheim, Arroyo Grande, Atascadero, Belmont, Hayward, Madera, Manteca, Merced, Milpitas, Oakland, Perris, Pleasant Hill, Redwood City, San Pablo, Santa Clara, Saratoga, Seal Beach, Seaside, Tracy, Vallejo
- **Counties**: El Dorado, Fresno, Humboldt, Merced, Monterey, Orange, San Joaquin
- **Special Districts**: Coachella Valley Public Cemetery District, Cosumnes Community Services District, First 5 of Alameda County, Foothill-DeAnza Community College District, Housing Authority of the City of Santa Barbara, Housing Authority of the County of San Bernardino, Livermore Area Recreation and Park District, Mendocino Coast Recreation and Park District, Port of Oakland, Orange County Fire Authority, Santa Clara County Housing Authority, Superior Court of California-Kern County, Sweetwater Authority, Travis Unified School District, Truckee Sanitary District, West Valley Mission Community College District, Valley County Water District

She earned her B.S. degree in Business Administration with an emphasis on Human Resources Management at California State University, Fresno and is a certified Senior Professional in Human Resources (SPHR). Kari serves as a Personnel Commissioner for the City of Clovis and is a member of Central California SHRM.

Kari will provide managerial project support throughout this effort, including classification analysis, interviews with employees and management, compensation data collection and analysis, internal job analysis, development of recommendations, and implementation strategies.

Alyssa Thompson, Ph. D.
Senior Consultant

Alyssa has over 22 years of human resources experience in classification and compensation analysis and development, performance management, affirmative action program development, and recruitment.

Alyssa also has experience in designing and conducting quantitative and qualitative research studies.
Since joining K&A in 2007, Alyssa has led and worked on well over 300 classification, compensation, organizational assessment, and recruitment projects for cities, counties, and special districts, including but not limited to some of these more recent projects:

- **Cities and Towns**: Concord, Danville, Discovery Bay, Fremont, Hayward, Hillsborough, Los Altos Hills, Monterey, Napa, Oakland, Orange, Palm Desert, Piedmont, Redlands, Sacramento, San Diego, Santa Barbara, Santa Rosa, Vallejo
- **Counties**: Bernalillo (New Mexico), Humboldt, Orange, Placer, San Joaquin, San Mateo, Solano, Tehama, Tuolumne

DocuSign Envelope ID: C702B174-42AA-462D-A780-FF4EF1C0B64F

- **Special Districts**:
  - Community Services District: Cosumnes CSD, Hayward Area Recreation and Park District, Heritage Ranch CSD, Tualatin Hills Park & Recreation District (OR)
  - Fire and Police Protection: Sacramento Metropolitan Fire District
  - Housing/Economic Development: Housing Authority of the County of Alameda, Oakland Housing Authority, San Diego Housing Commission, Santa Clara County Housing Authority
  - Open Space: Midpeninsula Regional Open Space District
  - Public Utilities: East Bay Municipal Utility District, Northern California Power Agency
  - Transportation: Alameda County Transportation Commission, Livermore Amador Valley Transit Authority, Metropolitan Transportation Commission, Ontario International Airport, Port of Hueneme, Port of Long Beach, Riverside County Transportation Commission, SACOG (Sacramento Area Council of Governments), Western Riverside Council of Governments
  - Wastewater: Central Contra Costa Sanitary District, Central Marin Sanitation Agency, Encina Wastewater Authority, Orange County Sanitation District, Vallejo Flood and Wastewater District
  - Water: Alameda County Water District, Bay Area Water Supply & Conservation Agency, Coastside County Water District, Contra Costa Water District, Dublin San Ramon Services District, Mid-Peninsula Water District, San Bernardino Valley Water Conservation District, Santa Clara Valley Water District, Santa Clarita Valley Water Agency, South Coast Water District, Valley County Water District, Zone 7 Water Agency
- Education: Alameda Unified School District, Berkeley Unified School District, Cutler-Orosi Unified School District, Foothill-De Anza Community College District, Mount San Antonio College, Salinas Union High School District, Travis Unified School District, West Valley Mission Community College District
- Courts: Habeas Corpus Resource Center, Superior Court of California-County of Orange

She earned a Bachelor's degree in Psychology with a minor in Sociology-Organizational Studies from the University of California, Davis, and a Ph.D. in Organizational Psychology from Alliant International University.

Alyssa will provide consultant support throughout the effort, including classification analysis, interviews with employees and management, compensation data collection and analysis, internal job analysis, development of recommendations, and implementation strategies.

Lindsay Christopher
Senior Consultant

Lindsay's professional qualifications include ten years of experience working in the public sector, mostly with Alameda County. In her role as Human Resources Analyst, she was responsible for classification and compensation projects, as well as recruitment and selection, in a Civil Service, merit-based, environment. Mostly recently, she continued to focus on classification and compensation projects at East Bay Regional Park District.

Since joining K&A in 2019, Lindsay has worked on studies for the following:

DocuSign Envelope ID: C702B174-42AA-462D-A780-FF4EF1C0B64F

- **Cities:** Gardena, Hemet, Milpitas, Tracy, Corona, Seattle (Library), Napa, Dinuba, Town of Truckee, san Leandro, Pleasant Hill, San Jose, Upland, Phoenix,
- **Counties:** Humboldt, **Butte, Kings,** San Diego, Contra Costa
- **Special Districts:** Contra Costa County Employees' Retirement Association, Greater LA County Vector Control District, Orange County Sanitation District, Purissima Hills Water District, Marin Municipal Water District, Housing Authority of the City of Santa Barbara, Tri-City Mental Health Authority, Victor Valley College, Buena Park Library District, East Bay Regional Park District, Tualatin Hills Park and Recreation District, Valley Water, San Luis and Delta Mendota Water Authority,_ Desert Recreation District, Santa Clara Valley Water District, Regional Government Services, Compton Community College District, Port of Oakland, LA County Development Agency, Albuquerque Housing Authority, Metropolitan Transportation Commission

A Bay Area native, Lindsay earned her B.A. degree in Sociology with a concentration in Criminology from San Jose State University.

Lindsay will provide Senior H.R. Associate support throughout this effort, including classification analysis, interviews with employees and management, compensation data collection and analysis, internal job analysis, development of recommendations, and implementation strategies.

Monica Garrison-Reusch, B.A., M.B.A.
Consultant

Monica has over 15 years of human resource program experience, all of which have been spent serving as either a team consultant or project manager on projects working with public sector agencies. Monica's primary professional focus over the last several years has been on classification and compensation practices.

Prior to joining K&A, Monica performed classification and compensation consulting services as either a team member or project manager on varied projects including large scale studies done for the Counties of Madera, Sacramento, Bernalillo (in New Mexico), and the California State Department of Personnel Administration. Monica also developed and served as a Co-Trainer for a two-day course on Classification and Compensation.

Monica's depth of experience allows her to provide a broad range of human resources services to public agencies. She specializes in compensation projects focusing on both base salary and total compensation analysis studies. Monica has also worked on project teams conducting classification studies and organizational analysis, including performing the full range of classification analysis and conducting in-depth survey and analysis of organizational structures and past organizational practices.

Since joining K&A, Monica has worked on studies for the following clients:

- **Cities:** Cotati, Crescent City, Pleasant Hill, Sacramento, Vallejo
- **Counties:** El Dorado, Mendocino, Monterey, Trinity
- **State**: California State Auditor's Office
- **Special Districts:** AC Transit, Cosumnes Community Services District, East Bay Municipal Utility District, Eastern Municipal Water District, El Dorado County Transit Authority, First 5 Contra Costa County, First 5 Santa Clara County, Hayward Area Recreation and Park District, Livermore Amador Valley Transit Authority, Mendocino Coast Rec and Park District, Mojave Water Agency, North Tahoe Public Utility District, Orange County Transportation Authority, State Water Contractors, Trabuco Canyon Water District

DocuSign Envelope ID: C702B174-42AA-462D-A780-FF4EF1C0B64F

She earned an MBA with an emphasis in Marketing at Golden Gate University and a Bachelor of Science in Business Administration from the University of Southern California.

Monica will provide Senior H.R. Associate support for this project, including classification analysis, interviews with employees and management, compensation data collection and analysis, internal job analysis, development of recommendations, and implementation strategies.

Arlene Marks Gibbs, BS, MPA, SPHR, IPMA-CP
Associate Consultant

Arlene Gibbs possesses over thirty years of Human Resources management experience including spending over twenty years in the public sector working for both large and small education, municipal and special district organizations in California.

Her public sector experience includes serving as the Chief Human Resources Officer for San Diego State University which is the largest California State University campus with over 6,700 faculty and staff. While at San Diego State, Arlene led the HR Directors Committee for the 23 campus system of HR service delivery. Her experience also includes senior and executive HR management roles with several small and large public agencies including the City of San Jose, the City of Tustin as well as air and water/wastewater special districts.

Arlene's experience includes all facets of Human Resources, Employee & Labor Relations. She is an experienced labor contract negotiator having negotiated many public sector labor agreements while serving as the Chief Spokesperson/Labor Negotiator. In addition, her experience includes managing recruitment and selection processes for all types of public sector positions, handling employee benefits functions, responding to labor and employee relations issues, coordinating classification and compensation studies, complying with labor laws, conducting personnel investigations, and managing a wide variety of general human resources functions.

Arlene holds a Masters' Degree in Public Administration from California State University Northridge and a Bachelor of Science Degree in Business Administration with an emphasis in Labor Relations from California State University Long Beach. She also is certified as an IPMA-CP and as a Senior Professional in Human Resources (SPHR).

Arlene has also led and participated in local, regional as well as statewide efforts in small and large agencies with the League of California Cities, IPMA as well as serving as a resource for City, County, State and Local Boards, Councils, Committees and Commissions.

Some of the K&A classification and compensation projects Arlene has worked on include but are not limited to:

- **Cities/Counties/Towns**: County of Butte, City of Bellflower, City of Concord, City of Cupertino, Humboldt County, City of Los Altos, Town of Los Altos Hills, and the City of Pinole.
- **Special Districts**: Dublin San Ramon Services District, Garfield County Public Library District (CO), Coachella Valley Water District, Foothill De Anza Community College District, and the Los Angeles County Development Authority.

Arlene will provide Senior H.R. Associate support throughout each effort, including classification analysis, interviews with employees and management, compensation data collection and analysis, internal job analysis, development of recommendations, and implementation strategies.

DocuSign Envelope ID: C702B174-42AA-462D-A780-FF4EF1C0B64F

Sarah Nunes, M.A.
Consultant

Sarah's professional qualifications include over 19 years of public sector experience with the Human Resources Department of the City of San José. Starting at the analyst level and eventually rising to Division Manager, she gained experience in recruitment and selection, classification and compensation, and general human resources administration.

Since joining Koff & Associates in 2017, Sarah has worked on Classification and Compensation studies for the following agencies:

- **Cities/Counties/Towns:** Antioch, Calistoga, Campbell, Concord, Foster City, Kings Co., Los Altos, Laguna Beach, Los Gatos, Milpitas, Monte Sereno, Newport Beach, Palo Alto, Perris, Piedmont, Phoenix, Pleasant Hill, Rio Dell, San Diego, San Jose, San Mateo, Santa Cruz, Saratoga, Seattle
- **Special Districts:** Central Fire Protection District of Santa Cruz, Housing Authority of the County of Alameda, Local Agency Formation Commissions of Santa Clara and Sonoma County, Metropolitan Transportation Commission, Napa Sanitation District, Ojai Valley Sanitary District, Orange County Fire Authority, Orange County Sanitation District, San Francisco Bay Area Water Emergency Transportation Authority ("WETA"), San Mateo Transit District, Santa Clara Valley Open Space Authority, Santa Clara Valley Water District, West Valley Sanitation District

Sarah earned her B.A. degree in Anthropology from Beloit College, in Wisconsin, and was awarded her M.A. in Anthropology from California State University, in Chico.
Sarah will provide H.R. Associate support for this project, including classification analysis, interviews with employees and management, comparator analysis, compensation data collection and analysis, internal job analysis, development of recommendations, and implementation strategies.

Ariele Rodriguez, M.A.
Associate Consultant

Ariele has eighteen years of public and private-sector human resources and management work experience including seven years as a project consultant performing base and total compensation studies for CPS HR Consulting. Her work experience includes compensation, classification, employee relations, labor relations, performance management, management training, adult education/college instruction, and conducting workplace investigations.

Since joining K&A in August of 2020, Ariele has worked on the following classification and/or compensation projects:

- **Cities/Towns**: Santa Rosa

Prior to joining K&A, Ariele worked on base or total compensation projects for the following agencies:

- **Cities/Towns**: Anaheim, Bell, Carson, Commerce, El Segundo, Half Moon Bay, Henderson, Hercules, Lancaster, Livingston, Millbrae, Murphy (TX), Oakland, Ontario, Palmdale, Perris, Redding, Richland Hills (TX), Rio Dell, Riverside, Sacramento, San Jose, San Luis (AZ), Santa Ana, Santa Clarita, Stockton, Tehachapi, Thousand Oaks,

DocuSign Envelope ID: C702B174-42AA-462D-A780-FF4EF1C0B64F

- **Counties**: Del Norte, Fresno, Imperial, Lake, Madera, Marion, Monterey, Montgomery, North, Placer, Sonoma, Ventura
- **Special Districts**: Alameda County Superior Court, California Department of Corrections and Rehabilitation, California Department of Public Health, CAL FIRE, CalVans, Central California Alliance for Health, Department of Transportation, Department of Water Resources, East Bay Regional Park District, Elk Grove Water District, Hayward USD, Hidden Valley Lake CSD, High Speed Rail, Kern Superior Court, Kings County Firefighters Assoc, LA County Sanitation, LACERA, Lakeside USD, League of CA Cities, Las Virgenes MWD, Merced USD, Montgomery College, Merit System Protection Board (MD), North County Transit District, Orange County Transportation Agency, CA Public Employment Relations Board, Rio Linda Elverta CWD, Sacramento Superior Court, Sacramento Area Flood Control Agency, San Diego Association of Governments, Santa Ana Water Resources, Sacramento Municipal Utilities District, Stanislaus Superior Court, CA State Bar, Ventura Regional Sanitation District, Western Area Power Administration

Since joining K&A in August of 2020, Ariele has worked on recruitments for the following agencies:

- City of Richmond, City of Sacramento, Dublin San Ramon Services District

Prior to joining K&A, Ariele performed full cycle recruiting for a large state-funded social services agency for six years. In this time, she screened, interviewed, hired, and performed onboarding duties for over 200 employees at all levels from clerical to executive. Additionally, she performed employee relations and labor relations work, conducted internal investigations, created and presented management training, wrote and delivered adverse employment actions, and served as liaison to the local SEIU chapter.

Ariele earned her B.A. degree in Interpersonal and Small Group Communication Studies and M.A. degree in Organizational and Instructional Communication Studies from California State University, Sacramento. She holds the HR professional certification SHRM-CP and is certified in Basic Mediation Skills.

Janna Dinkelspiel
Associate Consultant

Janna Dinkelspiel came to Koff & Associates in August 2022 with over 15 years' experience in private and public sector human resources. Most recently Janna was a Senior Employee Relations Analyst in a municipality where she gained well rounded experience in recruitment and retention, employee relations, labor relations, policy development, performance management, training and development and classification and compensation. Janna was the City's subject matter expert for classification and compensation while conducting and implementing three large-scale compensation studies for the City, as well as assisting the executive team with creation of a compensation policy.

Janna has a degree in Business Administration from the University of Washington and holds a Senior Professional Human Resources Certificate from HRCI.

Edward Hsi
Associate Consultant

Edward Hsi has over 5 years of public-sector human resources experience with over 4 years in classification and compensation. His experience includes public sector work for California Public Utilities Commission and Glendale Community College. Edward joined Koff and Associates in November 2022.

DocuSign Envelope ID: C702B174-42AA-462D-A780-FF4EF1C0B64F

Prior to joining Koff and Associates in 2022 he worked as a Classification and Compensation Analyst for Glendale Community College including taking part in managing, coordinating and participating in its District-wide classification study.

Edward earned his B.A. degree in Psychology at the University of California, Riverside and his M.S. degree in Industrial/Organizational Psychology at San Jose State University.

Kelly Barns
Associate Consultant

Kelly Barns has over 17 years of experience in a variety of leadership and technical public-sector human resources and risk management roles, from analyst to, Risk Manager to, Assistant Director and Director of Human Resources in municipal government. While a well-rounded practitioner and generalist with experience in talent acquisition, labor relations, classification and compensation, policy and contract development, performance management, employee engagement, Leaves and ADA administration and management, training and development, workplace investigations, health and safety, workers' compensation, employee benefits, liability administration and management, and general Human Resources and Risk Management administration. Kelly joined Koff & Associates in March 2022.

Kelly has a degree in Business Administration and Management, is a Human Resources Certified Professional through International Public Management Association of Human Resources (IPMA-CP) and has a Senior Professional Human Resources Certificate (SPHR).

Kelly will provide Human Resources Associate support throughout each project role, primarily consist of project and technical support in, classification analysis, interviews with employees and management, compensation data collection and analysis, internal job analysis, and development of recommendations. Kelly has a passion for engaging, collaborating with, and supporting clients, strengthening employee relations and community partnerships.

Cindy Harary, B.A.
Consultant

Cindy's professional qualifications include over 32 years of experience in the Human Resources field, primarily in classification and compensation. She spent the first 11 years in the public sector working for the City of Whittier, California, where she started out in their Public Works Department before moving to the Human Resources Department. She gained experience in classification and compensation, recruitment and selection, employee training and development, labor relations, and general human resources administration.

For the next 16 years, Cindy worked as a Human Resources Consultant for a consulting firm where she specialized in conducting classification and compensation studies for multiple public sector agencies including cities, counties, and special districts as well as several private sector clients. Some of the Orange County Cities she worked on in partnership with other consultants at that firm were: Cities of Brea, Laguna Beach, Lake Forest, La Palma, Los Alamitos, Placentia, San Clemente, Stanton and Tustin. In Los Angeles County, her work includes: Cities of Corona, Downey, El Monte, Manhattan Beach, and Upland. Finally, in San Bernardino County she has worked on the City of Rancho Cucamonga.

Since joining Koff & Associates in 2015, Cindy has worked on Classification and/or Compensation studies for:

DocuSign Envelope ID: C702B174-42AA-462D-A780-FF4EF1C0B64F

- **Cities/Towns**: Anaheim, Big Bear Lake, Campbell, Carmel, Corona, Danville, Davis, Indian Wells, Laguna Niguel, Los Altos, Manteca, Menifee, Murrieta, National City, San Diego, Santa Ana, Santa Barbara, Seal Beach, Tracy, Yucca Valley
- **Counties**: Orange
- **Education**: Compton College
- **Special Districts:** Alameda Housing Authority, Altadena Library District, Bay Area Water Supply and Conservation Agency, Cosumnes Community Services District, Eastern Municipal Water District, Encina Wastewater Authority, Housing Authority of Alameda County, Housing Authority County of San Bernardino, Housing Authority for the County of Santa Barbara, Humboldt Waste Management Authority, Inland Empire Utilities Agency, Monte Vista Water District, North Coast County Water District, Orange County Fire Authority, Orange County Mosquito & Vector Control District, Oro Loma Sanitary District, Port of Hueneme, Rincon del Diablo Municipal Water District, Riverside County Transportation Commission, Santa Clarita Valley Water Agency, South Coast Air Quality Management District, Sweetwater Authority, Trabuco Canyon Water District, Vallecitos Water District, Water Replenishment District of Southern California, Western Municipal Water District

Cindy earned her B.A. degree in Broadcast Journalism at California State University, Long Beach.

Cindy will provide H.R. Associate support throughout this effort, including classification analysis, interviews with employees and management, compensation data collection and analysis, internal job analysis, development of recommendations, and implementation strategies.

Renate Tiner, B.Sc.
Associate Consultant

Renate's professional qualifications include five years of both non-profit and private sector Human Resources experience. Starting in Human Resources administration and rising into Human Resources management, she gained experience in full-cycle recruitment, orientation and on-boarding, Health and Safety, Worker's Compensation, licensing and accreditation, policy development, and general Human Resources administration. Renate has a total of 10 years' experience.

Since joining Koff & Associates in 2017, Renate has worked on Classification and Compensation Studies for the following agencies:

- **Cities:** Bellflower, Concord, Cupertino, El Monte, Hillsborough, Los Altos, Mt. Shasta, Piedmont, Rohnert Park, San Diego, Sausalito, West Sacramento, Calistoga, Foster City, Pittsburg, Perris, Santa Crus, Town of Truckee, Hayward, Rio Dell, County of Butte
- **Special Districts:** Alameda County Transportation Commission, Bay Area Water Supply and Conservation Agency, Eastern Municipal Water District, Dublin-San Ramon Services District, Foothill-De Anza Community College District, Groveland Community Services District, Los Angeles County Employees Retirement Association, Metropolitan Transportation Commission, Midpeninsula Regional Open Space District, Port of Long Beach, Riverside Community College District, and San Joaquin County Superior Court, Truckee Donner Public Utility District, Monterey Peninsula Regional Open Space District, Santa Clara Valley Open Space Authority, Triunfo Water & Sanitation District, Port of Stockton, Antelope Valley-East Kern Water Agency, Coachella Valley Water District, Foothill Municipal Water District, Orange County Sanitation District, Los Angeles Unified

DocuSign Envelope ID: C702B174-42AA-462D-A780-FF4EF1C0B64F

School District, Tahoe Transportation District, San Luis & Delta Mendota Water Authority, Habeas Corpus Resource Center

Renate earned her B.Sc. degree in Psychology from the University of Northern British Columbia, in Prince George BC, Canada. She was a Canadian Human Resource Professional (CHRP) Candidate before moving to the United States.

She will provide H.R. Associate support throughout this effort, including classification analysis, interviews with employees and management, compensation data collection and analysis, internal job analysis, development of recommendations, and implementation strategies.

Nicolle Wynia-Eide
Consultant

Nicolle Wynia-Eide has over 25 years of experience in the Human Resources profession including work in Classification and Compensation, Total Rewards, Benefits, and general human resources administration, the majority of which was in public sector. She has experience in designing and conducting small and large scall classification and compensation studies, pay equity evaluations, and organizational development.

Prior to joining Koff & Associates in 2023 she was a Senior Classification and Compensation Consultant for a large nonprofit heath care agency. Her public sector roles have included Human Resources Analyst for the City of Beaverton (Oregon) and 13 years working with and then supervising the Classification and Compensation team for the City of Portland.

Nicolle has a degree in Biology from Lewis and Clark College and a Human Resources Certification for Portland State University. She earned her Certified Compensation Professional in 2007 and her Senior Professional Human Resources Certificate (SPHR) in 2012. She is also a member of World at Work.

DocuSign Envelope ID: C702B174-42AA-462D-A780-FF4EF1C0B64F

APPENDIX B

Scope of Work by Department

DocuSign Envelope ID: C702B174-42AA-462D-A780-FF4EF1C0B64F

City of Gardena
List of Positions to be Reviewed by Department

Department	Number of Positions for Review/New Specs or Major Re-Writes	Comments/Class Specs Currently Developed
Administrative Services (Finance, HR and IT)	18/7	All positions to complete a PDQ; 9 class specs were written for the initial study; anticipate 7 new specs will be required and or major re-writes to original specs
City Wide Administrative Positions	14/10	Recommend all positions complete a PDQ; expect to write 10 new class specs (none were developed in the first study)
City Manager – Clerk of the Board	0	Does not anticipate staff need to be re-reviewed. Some title changes; minor revisions to 3 class specs.
Community Development	6/6	Does not anticipate many staff need to be re-reviewed but there are some new positions which need new specs and/or major revisions; expect 6 new class specs or rewrites
Police	25/8	Review maintenance position (PDQ required); Police Records Technician (3 individuals completing group PDQ); Police Records Assistant (3 individuals completing group PDQ); Police Services Officer (Jailer) (3 individuals completing a group PDQ – approximately 10 Jailers); 7 individual PDQ's and interviews from various administrative classes. Approximately 25 employees in these classes.
Public Works	30/4	There will be consolidation of maintenance positions into 3 broad maintenance classifications plus leads and this will affect about 30 positions; suggest we use the original PDQ's from these functional areas and levels and conduct 4 focus/group interviews with 4-5 incumbents in each to be sure all work elements are captured. Class specs have been developed for original series, and will need some re-work for consolidation; no comments were made on engineering classes so presume little, if any work, is needed on this class series; note Home Improvement series may not be necessary; no comments on director, manager and supervisory class specs, so again presume not much re-work needed.
Recreation and Human Services	50/20	This department needs major work; original study interviewed positions but the department was undergoing significant changes; only the Director spec was written originally, and the PDQ's are now outdated based on organizational changes; anticipate interviews for 25-30 people (groups where possible) and 20 new class specs.

DocuSign Envelope ID: C702B174-42AA-462D-A780-FF4EF1C0B64F

Department	Number of Positions for Review/New Specs or Major Re-Writes	Comments/Class Specs Currently Developed
Transportation	14/7	Includes positions whose jobs have changed etc. and new classes created; about 11 of the specs written have not changed (minor revisions); 7 new ones, or some with more revisions are needed; 3 paratransit classes are subject to a new operating model so impact not known.

City of Gardena

Gardena City Council Meeting
AGENDA REPORT SUMMARY

Agenda Item No. 12.B
Section: DEPARTMENTAL ITEMS - ADMINISTRATIVE SERVICES
Meeting Date: December 12, 2023

TO: THE HONORABLE MAYOR AND MEMBERS OF THE GARDENA CITY COUNCIL

AGENDA TITLE: City of Gardena Audit Reports for Fiscal Year Ended June 30, 2023; Annual Comprehensive Financial Report (ACFR), Family Child Care and GTrans

COUNCIL ACTION REQUIRED:
Staff Recommendation: Receive and File Audit Reports for Fiscal Year 2022-2023

RECOMMENDATION AND STAFF SUMMARY:
Presented for the City Council to receive and file are the audited financial reports for the fiscal year ended June 30, 2023, as prepared by the City's contracted auditing firm, The Pun Group, LLP, an independent public accounting firm fully licensed and qualified to perform audits of state and local governments within the State of California. The goal of the independent audit is to provide reasonable assurance that the financial statements of the City for the fiscal year ended June 30,2023, are free of material misstatement. There were no findings in the audit of the financial statements.

- Annual Comprehensive Financial Report (ACFR), June 30, 2023
  - The financial statements included in the ACFR represent all City funds. City management is responsible for the accuracy of the data, the fairness and completeness of the presentation, and the inclusion of all disclosures that are necessary for the reader to understand the City's operations. The report contains a citywide view of all governmental and business-type activities, as well as a focus on the financial position and operating results of the City's major funds.
  - The auditors issued an unmodified opinion that based upon their audit, the City's financial statements are presented fairly, as of June 30, 2023, and changes in the financial position and cash flows are in accordance with Generally Accepted Accounting Principles (GAAP) in the United States.
- Family Child Care Program Report, June 30, 2023
  - Issued with an unmodified opinion that the financial statements are presented fairly, in all material respects, the financial position of the Family Child Care Program as of June 30, 2023, and the results of its operations for the year ended in conformity with Generally Accepted Principles (GAAP) in the United States.
- GTrans Enterprise Fund, June 30, 2023
  - Issued with an unmodified opinion that the financial statements are presented fairly, in all material respects, the financial position of GTrans as of June 30, 2023,

and the results of its operations and cash flows for the year then ended in conformity with Generally Accepted Accounting Principles (GAAP) in the United States.

FINANCIAL IMPACT/COST:

No Financial Impact

ATTACHMENTS:

Attachment #1 - Annual Comprehensive Financial Report June 30, 2023.pdf
Attachment #2 - Child Care Program Report June 30, 2023.pdf
Attachment #3 - GTrans Report June 30, 2023.pdf

APPROVED:



_____
Clint Osorio, City Manager







City of Gardena, California

2023

Annual Comprehensive Financial Report

For the Fiscal Year Ended June 30, 2023

ANNUAL COMPREHENSIVE FINANCIAL REPORT

FISCAL YEAR ENDED JUNE 30, 2023

CITY OF GARDENA, CALIFORNIA

PREPARED BY

THE ADMINISTRATIVE SERVICES DEPARTMENT

Clint Osorio
City Manager

And

Raymond Beeman
Director of Administrative Services

* *

City of Gardena
Annual Comprehensive Financial Report
For the Year Ended June 30, 2023

Table of Contents

Page

INTRODUCTORY SECTION (Unaudited)

Letter of Transmittal i
GFOA Certificate of Achievement for Excellence in Financial Reporting ix
Organization Chart x
Commissions, Boards, Committees, Etc. xi
Officials of the City of Gardena, California xii

FINANCIAL SECTION

Independent Auditors' Report on the Financial Statements 1

Management's Discussion and Analysis (Required Supplementary Information) (Unaudited) 5

Basic Financial Statements:

Government-Wide Financial Statements:
Statement of Net Position 20
Statement of Activities 22

Fund Financial Statements:
Governmental Fund Financial Statements:
Balance Sheet 28
Reconciliation of the Governmental Funds Balance Sheet to the Government-Wide Statement of Net Position 31
Statement of Revenues, Expenditures, and Changes in Fund Balances 32
Reconciliation of the Governmental Funds Statement of Revenues, Expenditures, and Changes in Fund Balances to the Government-Wide Statement of Activities and Changes in Net Position 34

Proprietary Fund Financial Statements:
Statement of Net Position 36
Statement of Revenues, Expenses, and Changes in Net Position 39
Statement of Cash Flows 40

Index to Notes to the Basic Financial Statements 45
Notes to the Basic Financial Statements 47

City of Gardena
Annual Comprehensive Financial Report
For the Year Ended June 30, 2023

Table of Contents (Continued)

Page

FINANCIAL SECTION (Continued)

Required Supplementary Information (Unaudited):
- Budgetary Comparison Schedule – General Fund ... 101
- Budgetary Comparison Schedule – Economic Development Grants Special Revenue Fund ... 102
- Notes to the Budgetary Comparison Schedule ... 103
- Schedule of Changes in Net Pension Liability and Related Ratios – CalPERS Miscellaneous Plan ... 104
- Schedule of City's Proportionate Share of the Net Pension Liability and Related Ratios – CalPERS Safety Plan ... 106
- Schedule of Contributions – Pensions –
  - CalPERS Miscellaneous Plan ... 108
  - CalPERS Safety Plan ... 110
- Schedule of Changes in Net OPEB Liability and Related Ratios:
  - Governmental Activities Retiree Healthcare Plan ... 112
  - GTrans Retiree Healthcare Plan ... 114
  - Sewer Retiree Healthcare Plan ... 116
- Schedule of Contributions – Other Postemployment Benefits Plans:
  - Governmental Activities Retiree Healthcare Plan ... 118
  - GTrans Retiree Healthcare Plan ... 120
  - Sewer Retiree Healthcare Plan ... 122

Supplementary Information:

- Schedule of Revenues, Expenditures, and Changes in Fund Balance – Budget and Actual:
  - City Capital Projects Fund ... 127
- Nonmajor Governmental Funds:
  - Combining Balance Sheet ... 130
  - Combining Statement of Revenues, Expenditures, and Changes in Fund Balances ... 133
  - Schedule of Revenues, Expenditures, and Changes in Fund Balance – Budget and Actual:
    - Consolidated Lighting District Special Revenue Fund ... 136
    - Prop C Local Return Special Revenue Fund ... 137
    - Gas Tax Special Revenue Fund ... 138
    - Public Safety Grants Special Revenue Fund ... 139
    - Public Works Grants Special Revenue Fund ... 140
    - Human Services Grants Special Revenue Fund ... 141
    - Community Development Block Grant (CDBG) Special Revenue Fund ... 142
    - American Rescue Plan Special Revenue Fund ... 143
- All Debt Service Funds:
  - Combining Statement of Balance Sheet ... 146
  - Combining Schedule of Revenues, Expenditures, and Changes in Fund Balances ... 148
  - Schedule of Revenues, Expenditures, and Changes in Fund Balance – Budget and Actual:
    - 2006 Refunding COPs, Series A Debt Service Fund ... 150
    - 2007 Refunding Revenue Bonds SBRPCA Debt Service Fund ... 151
    - 2014 Taxable Lease Revenue Refunding Bonds Debt Service Fund ... 152
    - 2017 Lease Financing Bonds - Debt Service Fund ... 153
    - 2020 Taxable Pension Obligation Bonds - Debt Service Fund ... 154
    - 2021 Lease Revenue Bonds ... 155

City of Gardena
Annual Comprehensive Financial Report
For the Year Ended June 30, 2023

Table of Contents (Continued)

Page

Supplementary Information (Continued):

Internal Service Funds:
- Combining Statement of Net Position 159
- Combining Statement of Revenues, Expenses and Changes in Net Position 160
- Combining Statement of Cash Flows 161

STATISTICAL SECTION (Unaudited)

Net Position by Component 166
Changes in Net Position 168
Fund Balances of Governmental Funds 172
Changes in Fund Balances – Governmental Funds 174
Governmental Revenues by Sources 176
General Governmental Expenditures by Function 178
Assessed Valuation and Actual Value of Taxable Property 180
Assessed Value of Property by User Code 182
Assessed Value and Estimated Value of Taxable Property 184
Construction and Bank Deposits 186
Property Tax Rates – All Overlapping Governments 188
Direct and Overlapping Property Tax Rates 190
Ten Largest Property Taxpayers 192
Top 25 Sales Tax Producers 193
Property Tax Levies, Tax Collections, and Delinquency 194
Card Club Gross Revenue Fee 195
Utility Users Tax Received 196
Taxable Sales by Category 197
Ratio of Outstanding Debt by Type 198
Pledged-Revenue Coverage 201
Ratio of General Bonded Debt Outstanding 202
Direct and Overlapping Bonded Debt 203
Legal Debt Margin Information 204
Debt Service Payment Schedule 206
Demographic and Economic Statistics 209
Ten Principal Employers 210
Unemployment Rates 211
Full-Time and Part-Time City Employees by Function 212
Employee Union Representation 213
Operating Indicators by Function 214
Capital Asset Statistics by Function 215

Independent Auditors' Report on Internal Control Over Financial Reporting and on Compliance and Other Matters Based on an Audit of Financial Statements Performed in Accordance with *Government Auditing Standards* 217

City of Gardena

Annual Comprehensive Financial Report
For the Year Ended June 30, 2023

(*This page is intentionally left blank)*

1700 WEST 162nd STREET / GARDENA, CALIFORNIA 90247-3732 / WWW.CITYOFGARDENA.ORG / PHONE (310) 217-9500

December 7, 2023

Members of the City Council,
and Citizens of Gardena

ANNUAL COMPREHENSIVE FINANCIAL REPORT
FISCAL YEAR 2022-2023
LETTER OF TRANSMITTAL

It is our pleasure to submit the Annual Comprehensive Financial Report (ACFR) of the City of Gardena (the City) for the fiscal year ended June 30, 2023 (FY 22-23). The report is intended to update readers on the status of the City's financial position and results of operations for the past fiscal year.

Management assumes full responsibility for the completeness and reliability of the information contained in this report, based upon a comprehensive framework of internal control that it has established for this purpose. Because the cost of internal control should not exceed anticipated benefits, the objective is to provide reasonable, rather than absolute, assurance that the financial statements are free of any material misstatements. This ACFR has been prepared in accordance with Generally Accepted Accounting Principles (GAAP) in the United States of America as promulgated by the Government Accounting Standards Board (GASB).

The report contains a Citywide view of all governmental and business-type activities, as well as a focus on the financial position and operating results of the City's major funds.

The City's financial statements have been audited by The Pun Group LLP, an independent public accounting firm fully licensed and qualified to perform audits of the State and local governments within the State of California. The financial statements included in this ACFR represent all City funds.

The goal of the independent audit is to provide reasonable assurance that the financial statements of the City for the fiscal year ended June 30, 2023, are free of material misstatement. The auditors concluded, based upon the audit, that there was a reasonable basis for rendering an unmodified opinion that the City's financial statements for the fiscal year ended June 30, 2023, were fairly presented in conformity with GAAP. The independent auditor's report is presented as the first component of the financial section of the ACFR. Management's Discussion and Analysis (MD&A) immediately follows the independent auditor's report and provides a narrative introduction, overview, and analysis of the basic financial statements. The MD&A complements this letter of transmittal and should be read in conjunction with it.

TASHA CERDA, Mayor / MARK E. HENDERSON, Mayor Pro Tem
RODNEY G. TANAKA, Councilmember / PAULETTE C. FRANCIS, Councilmember / WANDA LOVE, Councilmember
MINA SEMENZA, City Clerk / GUY MATO, City Treasurer / CLINT OSORIO, City Manager / CARMEN VASQUEZ, City Attorney

PROFILE OF THE GOVERNMENT

The City of Gardena is located just miles from the beautiful California coast, near the interchange of the Harbor, San Diego, and Gardena freeways, and just 13 miles south of the City of Los Angeles, in the South Bay Area. Gardena is a part of the Los Angeles-Long Beach-Glendale Metropolitan Statistical Area.

Gardena has the singular distinction of having within its borders both the first legal card club licensed in the State of California, granted in 1936, and the newest club in the state, which opened in 2000. At one time only five-card draw and lowball poker could be played. During the 1960s, Gardena was the only City in Los Angeles County to have legal gambling. In the mid-1980s, a tremendous Asian influence arrived with the introduction of a number of California games. A complete listing is contained in the City of Gardena Resolution No. 6581.

The City of Gardena, incorporated on September 11, 1930 as a general law City, operates under the Council-Manager form of government. Policy-making and legislative authority are vested in a governing council consisting of four members of the City Council and a Mayor elected on a non- partisan basis at-large for four-year terms, with an election every two years. The Council is responsible for, among other things, establishing policy, passing ordinances, adopting an annual budget, appointing members to various City Commissions and Boards and hiring the City Manager and City Attorney. The City Manager is responsible for carrying out the policies and ordinances of the City Council, for overseeing the day-to-day operations of the government, and for appointing the heads of the various departments.

Gardena offers a full range of municipal services, including police and code enforcement; recreation and human services; public works; streets and parks; planning and building services; engineering; transportation services (enterprise fund); and general administration. Fire services are contracted with Los Angeles County.

BUDGET PROCESS

The City is required to adopt an initial budget for the fiscal year no later than June 30 preceding the beginning of the fiscal year on July 1. This annual budget serves as the foundation for the City of Gardena's financial planning and control. The budget is prepared by fund, function (e.g. public safety), and department (e.g., police). Department heads may transfer resources within a department as they see fit. The City of Gardena adopts biennial budget, but the second fiscal year is being adopted in the subsequent fiscal year in the same manner and process.

The City's annual budget process commences in February with the distribution of the updated Budget Manual that details the City's general budgetary policy and the specific goals and objectives for the upcoming fiscal year. Departments are given specific instructions and timelines, the City's chart of accounts, a rate schedule for apportioned costs such as liability and health insurance, and budget forms and formats.

The Director of Administrative Services, in coordination with all operating departments, provides the City Manager with proposed revenue projections. These revenue estimates are reviewed with the department budget requests to determine available funding levels for the fiscal

year. Supplemental requests for new personnel, services or capital/equipment purchases are subject to City Manager review and approval before becoming part of the proposed operating budget. This process applies to all governmental and enterprise funds.

The City Manager and Director of Administrative Services meet with the Department Heads to review all operating expenditures, budget change requests, department's goals and programs for the upcoming fiscal year. After this final review and approval by the City Manager, a proposed budget will be presented to the Finance Committee for review and recommendation.

Budget study sessions and a public hearing are then presented to City Council in May. A separate community budget forum will follow to present the proposed budget and address questions from the stakeholders. Then budget is adopted by a resolution prior to June 30.

Throughout the fiscal year, actual expenditures and revenues are being presented to the Finance Committee for review on quarterly basis. The budget can be amended as necessary to meet the City's needs during the fiscal year. The City Council has the legal authority to amend the budget at any time. Department Heads may only authorize expenditures based on appropriations approved by City Council. Actual expenditures may exceed budget appropriations by line-item. However, total expenditures within each fund may not exceed the total appropriation for that fund. The City Manager has the authority and discretion to approve interdepartmental appropriation transfers if they are within the same fund.

LOCAL ECONOMIC CONDITIONS AND OUTLOOK

Top 5 sources of General Fund revenue account for 76.5% or $61M. The remaining revenues account for 23.5% of the total and are represented by a broad range of sources.

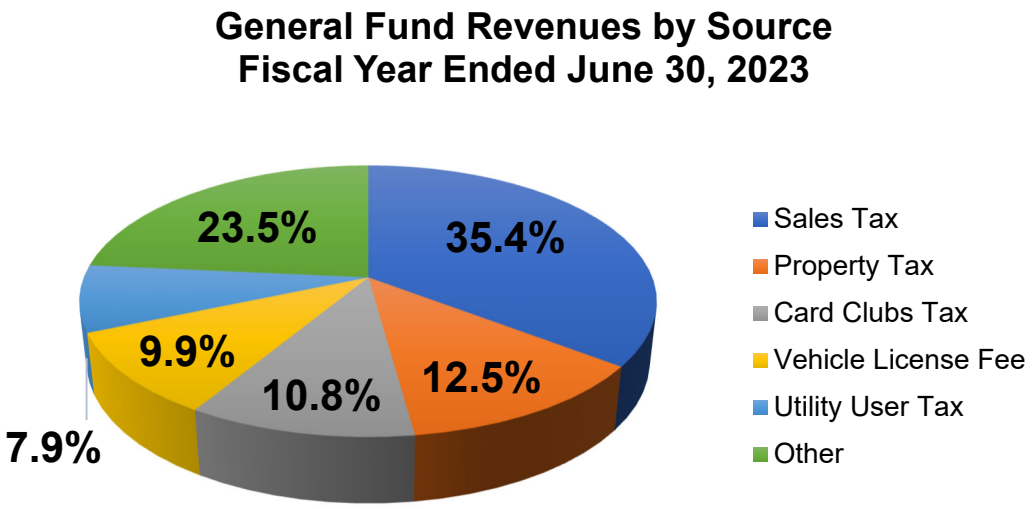

Sales Tax

Sales Tax represents the single largest source of General Fund revenue at $28.2M or 35.4%. It is made up from the 6 categories below. The general retail category includes department stores, gas

stations, general merchandise, restaurants, and hotels. General retail is the largest economic sector which generates 39% of the sales tax for Gardena. For fiscal year 2022-23, actual sales tax exceeds budget by 12.2% or $3M. For Measure G 0.75%, the fiscal year actual of $12.6M includes a one-time payment. Overall, the City of Gardena's sales per capita is higher than Los Angeles County average and consistently outperforms projections, a strong indicator of a vibrant local economy and strong business support.

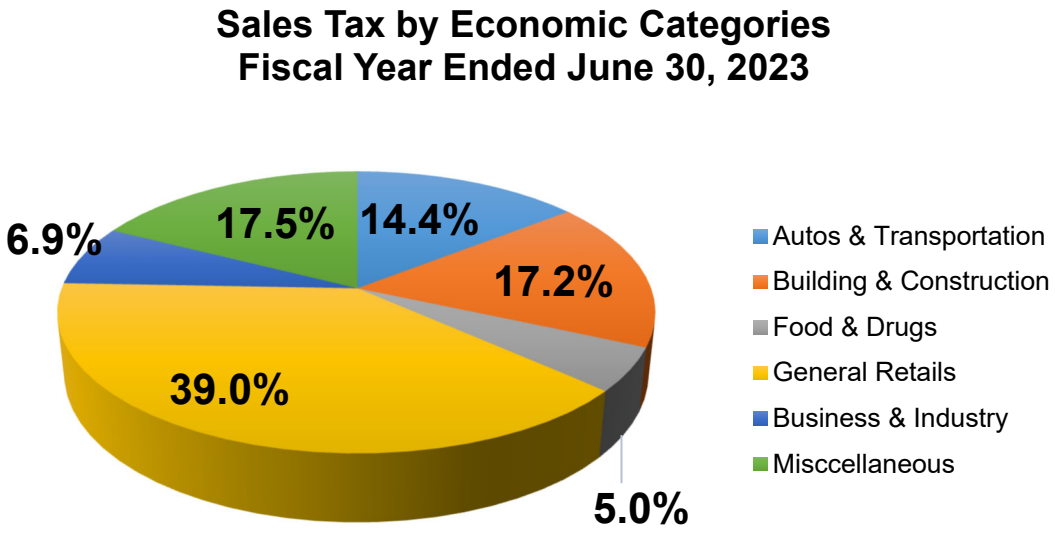

Property Tax

Gardena has a diverse land use for its 6 square miles. The City has a total assessed valuation of $8.65B, an increase of 7.2% over prior year. Of the City's 14,430 parcels, 87.7% are residential, 9.3% are commercial/industrial and the remaining 3% for other miscellaneous uses.

Property tax is the second highest source of General Fund revenue at 12.5% or $9.9M. The year-over-year increase of 8.7% and 11% over the budget amount from increased assessment value and recent developments in the City. Overall, the City and the South Bay region are experiencing an increase in housing prices.

Card Club Tax

City of Gardena is fortunate to have two card clubs within the City limits, Lucky Lady Casino and Hustler Casino. The City receives 12% of the gross revenue from both casinos. For the fiscal year 2022-23, the City collected card club tax of $8.6M or 10.8% of General Fund revenue. This reflect a decrease of 2.3% or $200K vs the budgeted amount.

Vehicle License Fee (VLF)

The City receives $7.9M or 9.9% of the General Fund revenue. This is the fourth largest source of General Fund revenue.

When a vehicle is registered in California, a license fee is charged by the State of California. This

fee includes a small administrative fee and a property tax in-lieu fee. The in-lieu fee is based on the depreciated value of the vehicle and declines over the useful life of the vehicle. This in-lieu fee is allocated to cities and counties based on a per capita basis.

In 2005, the VLF was permanently reduced to 0.65% from 2.0% of the vehicle's fair market value. Any loss to cities by this rate reduction at that time was made up with an allocation from the Couty's Educational Revenue Augmentation Fund property tax account. This allocation will grow with any corresponding growth in the City's secured property tax valuation.

Utility User Tax (UUT)

The Utility User Tax revenue received by the City is based on adopted ordinances. The current UUT rate is 5% for telecommunications (wired and wireless), electricity, gas, and water. Effective in 2016, the UUT rate for prepaid wireless is 3.5%.

For the fiscal year, the City received $6.3M or 7.9% of the total General Fund revenue. This is an increase of $1.4M or 28.9% when compared to the budget. The main factor for the increase is due to higher utility prices and increased usage from the recent extreme weather.

The top 5 General Fund revenue sources account for 76.5%, which is comparable to prior fiscal year. The remaining 23.5% comprise of various sources including business license tax, franchise tax, transient occupancy tax (TOT), charges, license and permits, use of money & property, miscellaneous and intergovernmental. Use of money & property revenue has increased by $2.6M mainly due to higher interest income and the reversal of fair value market adjustment. Overall, the total General Fund revenue increased by 6.1% or $4.6M. This modest increase is mainly attributed to the increase in sales tax revenue, indicative of a healthy local economic condition.

LONG-TERM FINANCIAL PLANNING AND MAJOR INITIATIVES

As a result of the City's fiscally conservative approach taken these past couple of years, the City finds itself in a financially stable position, which allowed the City in its adopted budget for fiscal year 2023-2024, to budget for and add a total of 27 additional positions to the City's staffing resources (11-Full Time and 16-Part Time), as well as investments in seniors, youth and community service programs and the largest Capital Improvement Program budget in the Cities history with over $50 million.

The City maintains an existing lease rating of "A+" rating from Standard & Poor's and an "A1" rating with Moody's for its general fund lease supported debt as of June 30, 2023. The City's issuer ratings are "AA- with S&P and "Aa3" with Moody's. Which is reflective of a stable fiscal outlook and the expectation that Gardena will continue to maintain balanced operational costs with substantial fiscal reserves.

Aligning with the City's vision of making Gardena as one of the most desired communities to live, do business, work, and play in the South Bay region. The City will maintain a safe community environment by implementing Building Development Safety and Security Standards, as well as continue street and sidewalk improvements Citywide.

To further the City's vision, in 2021 the City took a proactive approach to take advantage of the

historical low interest rates and used its excellent issuer credit rating of AA- with S & P to obtain a Lease Revenue Bond in the amount of $15 Million dollars with a 20-year term at 1.98% true interest cost over the life of the bond. These bonds will be used to fund various capital projects including the Gardena Community Aquatic & Senior Center, a multigenerational community building to provide public access and recreational activities to residents.

In November of 2022, the City of Gardena was awarded the prestigious Eddy Award for the "Most Business-Friendly City" (population over 60,000) from the Los Angeles County Economic Development Corporation (LAEDC). This was the City's third time being nominated for the award and first ever win. Since 1966, the LAEDC Eddy awards celebrate individuals, organizations, and educational institutions that demonstrate exceptional contributions to inclusive economic development in the region. LAEDC also recognizes local cities in categories based on their population size for creating environments that foster creation and growth of enterprises that provide good jobs and build wealth for our communities.

In June 2023, the National Civic League nominated the City of Gardena as an All-America City Award finalist. Gardena was one of the 19 cities nominated for the 2023 All-American City Award. The City won the award in 1980 and was one of few cities to have received this award in California. The All-America City Award recognizes communities that leverage civic engagement, collaboration, inclusiveness, and innovation to successfully address local issues.

CAPITAL IMPROVEMENT PROJECTS

The City continues to devote significant resources to maintenance and improvement of its top rated streets and roads. Gardena's current street pavement condition index (PCI) of 81 is one of the highest in California.

The fiscal year 2022-23 capital budget is highlighted by the two major community projects: The Community Aquatic & Senior Center and a new Mas Fukai Park building. The City is aggressively reinvesting in the community via various infrastructure projects by adopting $40.5M CIP budget for 40 different projects. It was the single largest CIP budget to date in City history. 50% of the budget is dedicated for parks and facilities, 46.9% for road and street projects and the remaining 3.1% is for sewer and stormwater projects.

Most of the projects are multi-year projects so at the end of the fiscal year only 4 of the 40 budgeted projects were completed. Two street projects were completed; the 170th Street Improvement and Pedestrian Safety Improvements, which significantly enhanced safety for street sidewalks and ramps on various intersections in the City.

Significant progress has been made with the two community projects. The Community Aquatic & Senior Center project is moving forward to the construction phase with the target completion date of Fall 2025. As for the Mas Fukai Park building, the initial design has been presented to the City Council.

In June 2023, the City adopted its Fiscal Year 2023-24 CIP budget of $50.9M, the single largest fiscal year CIP budget in the City's history. With 55% or $28M of the CIP budget for park and facility projects including the construction of the Community Aquatic & Senior Center. $21.8M or 43% for 19 street projects; including $3.7M for the Artesia Boulevard Traffic Signal Improvement project. This project will significantly address existing and future traffic conditions as well as improving landscape on a major City's corridor.

PENSION & OPEB STABILIZATION FUNDS

The City issued $101M in Taxable Pension Obligation Bonds in 2020 at 3.29% to save the City $51M over the 19-year life of the bond. The City adopted an Unfunded Accrued Liability (UAL) Policy to address future pension liability. Under this policy, UAL Funds were created so each fiscal year the City must budget a contribution toward future pension liability. As of June 30, 2023, these funds have a balance of $2.2M.

With the desire to address Other Post-Employment Benefits (OPEB) liability and take advantage of higher interest yields, in 2017 the City established California Employers' Retiree Benefit Trust (CERBT) accounts, IRC Section 115 Trust Accounts, with CalPERS. During the fiscal year 2022-23, the City made a $1.75M contribution to the trust. As of June 30, 2023, the City's CERBT trust has a combined balance of $7.2M, $1.9M from the City and $5.3M from GTrans' CERBT account.

CASH MANAGEMENT

The City manages a pooled investment program for all funds in which temporarily idle cash is invested in a variety of instruments. The investment program is managed in accordance with the Investment Policy approved by the City Council on an annual basis. Safety, liquidity, and yield, in that order, are the objectives of the investment program. Investments are diversified among investment tools including certificates of deposit, Federal agency securities, State of California Local Agency Investment Fund (LAIF), corporate medium-term notes, money market mutual funds, California Asset Management Program (CAMP) Pool.

At the fiscal year end on June 30, 2023, the City had a total investment portfolio of $84.8M. Almost half of the portfolio is with CAMP, which is completely liquid and increased investment earnings substantially. The investment report is presented to City Council for review and approval monthly. It is also made available on the Financial Transparency Dashboard at www.cityofgardena.org.

RISK MANAGEMENT

The City maintains self-insurance programs for worker's compensation and general liability insurance up to a maximum of $750,000 per occurrence. General liability claims that exceed the Self-Insured Retention (SIR) are covered by Public Risk Innovatin Solutions Management (PRISM). Worker's compensation claims that exceed the SIR are insured by the PRISM up to the California statutory limits for workers' compensation. For the City's transit department, GTrans, the SIR is $250,000 and is being covered by California Transit Indemnity Pool (CalTIP).

The City also carries stop-loss insurance of individual health benefit claims in excess of $75,000 for Medicare retirees and $50,000 for all other members. The City contracts with third party administrators who manage the claims filed against the City.

RELEVANT FINANCIAL POLICIES

The City has adopted a set of financial policies. GASB Statement No. 54, titled "Fund Balance Policy for the General Fund is the policy that provides the users of the financial statements greater information about the availability of reported fund balance and the City's commitment of financial resources. Note 13 of the Notes to Basic Financial Statements, presents more detailed information about the five categories of fund balance – non-spendable, restricted, committed, assigned and unassigned fund balance.

During the current fiscal year, the City adopted new accounting procedures and policy to comply with the new Governmental Accounting Standard Board (GASB) Statement 96 for software subscriptions. The object of this statement is to better meet the information needs of financial statements users by improving accounting and financial reporting for software subscriptions. This Statement will enhance the relevance of consistency of information about government's subscription activities.

AWARDS and ACKNOWLEDGEMENTS

The Government Finance Officers Association of the United States and Canada (GFOA) awarded a Certificate of Achievement for Excellence in Financial Reporting to the City of Gardena for its ACFR for the fiscal year ended June 30, 2022. This was the thirty-seventh consecutive year that the government has achieved this prestigious award. In order to be awarded a Certificate of Achievement, the government had to publish an easily readable and efficiently organized ACFR that satisfied both generally accepted accounting principles and applicable program requirements.

A Certificate of Achievement for Excellence in Financial Reporting is valid for a period of one year only. However, we believe that our current ACFR continues to meet the Certificate of Achievement for Excellence in Financial Reporting Program's requirements, and we are submitting it to the GFOA to determine its eligibility for another certificate.

The preparation of this report could not have been accomplished without the collaborative assistance of the Department Heads and staff in all City departments. First and foremost, we want to recognize the dedicated employees of the Administrative Services Department. Their professional expertise and unassuming commitment to excellence is constantly manifested in the quality of the City's financial records and reporting. Appreciation is also expressed to the audit staff of The Pun Group, LLP, for their advice and assistance in the preparation of this report. Finally, we would like to thank the members of the City Council for their support in planning and conducting the financial operations of the City in a responsible and progressive manner.

Respectfully submitted,

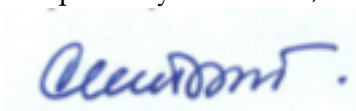

Clint D. Osorio, MPA
City Manager

Respectfully submitted,



Ray Beeman, CPA
Director of Administrative Services

Government Finance Officers Association

Certificate of Achievement for Excellence in Financial Reporting

Presented to

City of Gardena
California

For its Annual Comprehensive
Financial Report
For the Fiscal Year Ended

June 30, 2022

Christopher P. Morrill

Executive Director/CEO

CITY OF GARDENA ORGANIZATION CHART

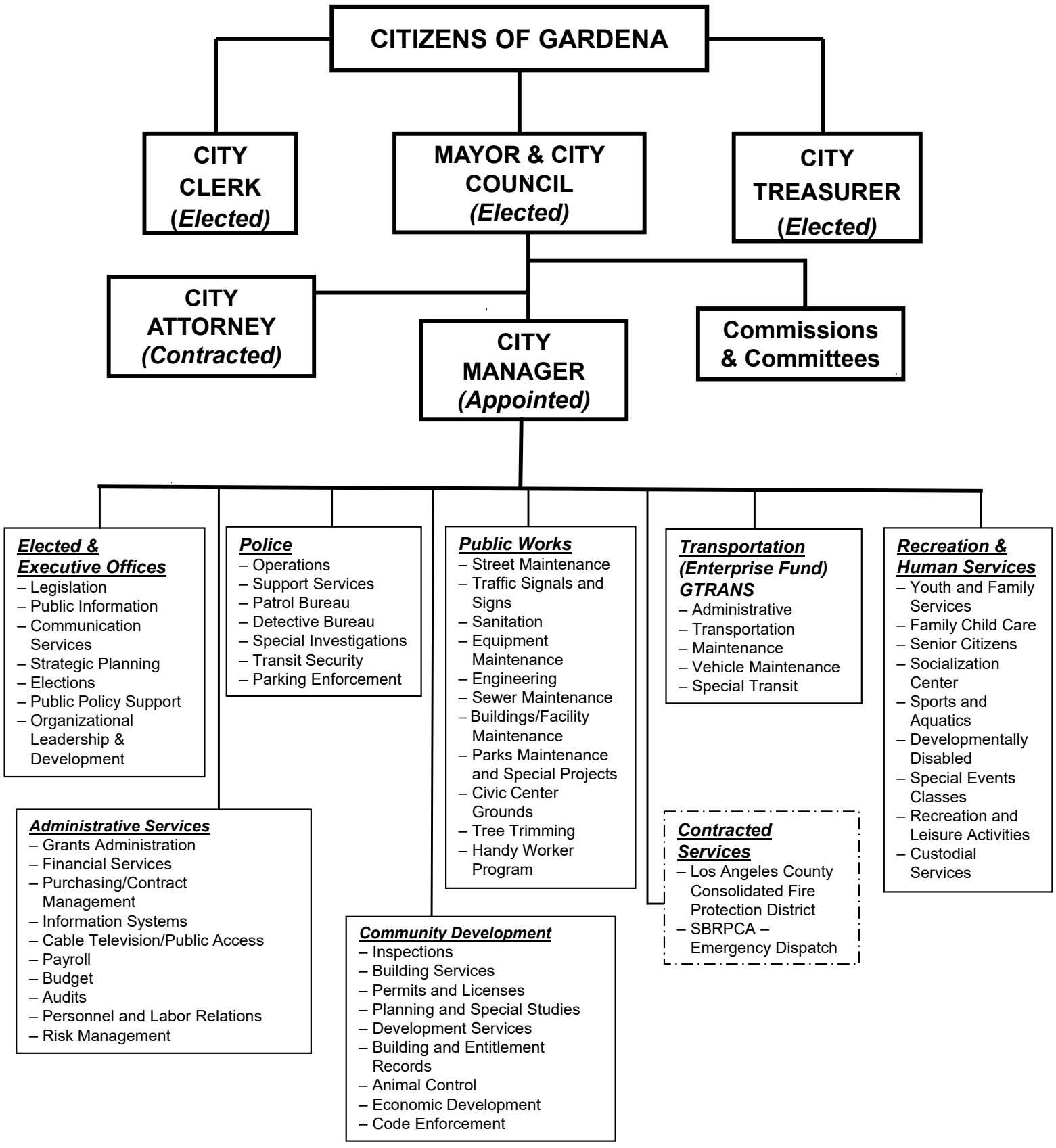

CITY OF GARDENA
COMMISSIONS, BOARDS, COMMITTEES, ETC.

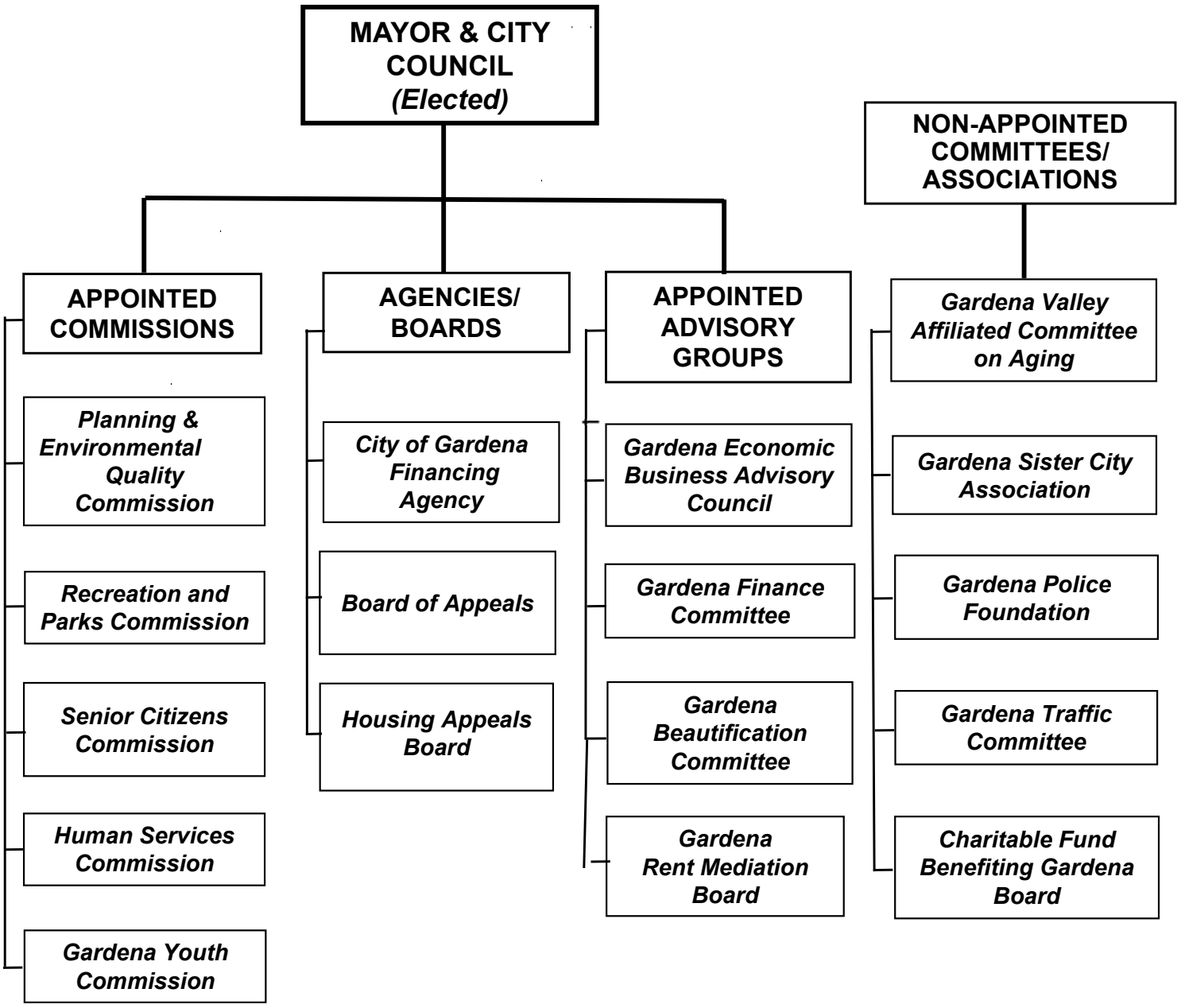

ELECTED OFFICIALS & EXECUTIVE STAFF

FISCAL YEAR 2022 – 2023

CITY OF GARDENA

ELECTED OFFICIALS

Mayor……..Tasha Cerda
Mayor Pro Tem…….. Mark E. Henderson
Councilmember…… Rodney G. Tanaka
Councilmember…… Paulette C. Francis
Councilmember……...Wanda Love

City Clerk…… Mina Semenza
City Treasurer…… Guy H. Mato

EXECUTIVE STAFF & ADMINISTRATION OFFICIALS

City Manager ..... Clint Osorio
City Attorney ..... Carmen Vasquez
Chief of Police ..... Michael Saffell
Director of Administrative Services ..... Ray Beeman
Director of Community Development ……..... Greg Tsujiuchi
Director of Public Works ..... Allan Rigg
Director of Recreation and Human Services ..... Stephany Santin
Director of Transportation ..... Ernie Crespo
Assistant Fire Chief – LA County Fire District ..... Brian Bennett

THE PUN GROUP
ACCOUNTANTS & ADVISORS

200 E. Sandpointe Avenue, Suite 600
Santa Ana, California 92707

www.pungroup.cpa

INDEPENDENT AUDITORS' REPORT

To the Honorable Mayor and the Members of the City Council
of the City of Gardena
Gardena, California

Report on the Audit of the Financial Statements

Opinions

We have audited the accompanying financial statements of the governmental activities, the business-type activities, each major fund, and the aggregate remaining fund information of the City of Gardena, California (the "City"), as of and for the year ended June 30, 2023, and the related notes to the basic financial statements, which collectively comprise the City's basic financial statements as listed in the table of contents.

In our opinion, the financial statements referred to above present fairly, in all material respects, the respective financial position of the governmental activities, the business-type activities, each major fund, and the aggregate remaining fund information of the City, as of June 30, 2023, and the respective changes in financial position and, where applicable, cash flows thereof for the year then ended in accordance with accounting principles generally accepted in the United States of America.

Basis for Opinions

We conducted our audit in accordance with auditing standards generally accepted in the United States of America ("GAAS"), and the standards applicable to financial audits contained in *Government Auditing Standards*, issued by the Comptroller General of the United States (*"Government Auditing Standards")*. Our responsibilities under those standards are further described in the Auditors' Responsibilities for the Audit of the Financial Statements section of our report. We are required to be independent of the City and to meet our other ethical responsibilities, in accordance with the relevant ethical requirements relating to our audit. We believe that the audit evidence we have obtained is sufficient and appropriate to provide a basis for our audit opinions.

Other Matters

Change in Accounting Principle

As described in Note 1 to the financial statements, the City adopted new accounting guidance, Governmental Accounting Standards Board ("GASB") Statement No. 96, *Subscription-based Information Technology Arrangements* . Our opinion is not modified with respect to this matter.

Management's Responsibility for the Financial Statements

Management is responsible for the preparation and fair presentation of these financial statements in accordance with accounting principles generally accepted in the United States of America; and for the design, implementation, and maintenance of internal control relevant to the preparation and fair presentation of financial statements that are free from material misstatement, whether due to fraud or error.

In preparing the financial statements, management is required to evaluate whether there are conditions or events, considered in the aggregate, that raise substantial doubt about City's ability to continue as a going concern for twelve months beyond the financial statement date, including any currently known information that may raise substantial doubt shortly thereafter.

Auditors' Responsibilities for the Audit of the Financial Statements

Our objectives are to obtain reasonable assurance about whether the financial statements as a whole are free from material misstatement, whether due to fraud or error, and to issue an auditors' report that includes our opinion. Reasonable assurance is a high level of assurance but is not absolute assurance and therefore is not a guarantee that an audit conducted in accordance with GAAS and *Government Auditing Standards* will always detect a material misstatement when it exists. The risk of not detecting a material misstatement resulting from fraud is higher than for one resulting from error, as fraud may involve collusion, forgery, intentional omissions, misrepresentations, or the override of internal control. Misstatements are considered material if there is a substantial likelihood that, individually or in the aggregate, they would influence the judgment made by a reasonable user based on the financial statements.

In performing an audit in accordance with GAAS and *Government Auditing Standards*, we:

- exercise professional judgment and maintain professional skepticism throughout the audit.
- identify and assess the risks of material misstatement of the financial statements, whether due to fraud or error, and design and perform audit procedures responsive to those risks. Such procedures include examining, on a test basis, evidence regarding the amounts and disclosures in the financial statements.
- obtain an understanding of internal control relevant to the audit in order to design audit procedures that are appropriate in the circumstances, but not for the purpose of expressing an opinion on the effectiveness of the City's internal control. Accordingly, no such opinion is expressed.
- evaluate the appropriateness of accounting policies used and the reasonableness of significant accounting estimates made by management, as well as evaluate the overall presentation of the financial statements.
- conclude whether, in our judgment, there are conditions or events, considered in the aggregate, that raise substantial doubt about the City's ability to continue as a going concern for a reasonable period of time.

We are required to communicate with those charged with governance regarding, among other matters, the planned scope and timing of the audit, significant audit findings, and certain internal control-related matters that we identified during the audit.

Required Supplementary Information

Accounting principles generally accepted in the United States of America require that the Management's Discussion and Analysis, the Budgetary Comparison Schedules – General Fund and Major Special Revenue Funds, the Schedule of Changes in Net Pension Liability and Related Ratios, the Schedule of City's Proportionate Share of the Net Pension Liability and Related Ratios, the Schedules of Contributions – Pensions, the Schedules of Changes in Net Other Postemployment Benefits Liability and Related Ratios, and the Schedules of Contributions – Other Postemployment Benefits as listed in the table of contents be presented to supplement the basic financial statements. Such information, although not a part of the basic financial statements, is required by the Governmental Accounting Standards Board, who considers it to be an essential part of financial reporting for placing the basic financial statements in an appropriate operational, economic, or historical context. We have applied certain limited procedures to the Required Supplementary Information in accordance with auditing standards generally accepted in the United States of America, which consisted of inquiries of management about the methods of preparing the information and comparing the information for consistency with management's responses to our inquiries, the basic financial statements, and other knowledge we obtained during our audit of the basic financial statements. We do not express an opinion or provide any assurance on the information because the limited procedures do not provide us with sufficient evidence to express an opinion or provide any assurance.

Supplementary Information

Our audit was conducted for the purpose of forming opinions on the financial statements that collectively comprise the City's basic financial statements. The combining and individual nonmajor fund financial statements are presented for purposes of additional analysis and are not a required part of the basic financial statements. Such information is the responsibility of management and was derived from and relates directly to the underlying accounting and other records used to prepare the basic financial statements. The information has been subjected to the auditing procedures applied in the audit of the basic financial statements and certain additional procedures, including comparing and reconciling such information directly to the underlying accounting and other records used to prepare the basic financial statements or to the basic financial statements themselves, and other additional procedures in accordance with GAAS and *Government Auditing Standards*. In our opinion, the combining and individual nonmajor fund financial statements are fairly stated, in all material respects, in relation to the basic financial statements as a whole.

Other Information

Management is responsible for the other information included in the annual report. The other information comprises the introductory and the statistical sections but does not include the basic financial statements and our auditors' report thereon. Our opinions on the basic financial statements do not cover the other information, and we do not express an opinion or any form of assurance thereon.

In connection with our audit of the basic financial statements, our responsibility is to read the other information and consider whether a material inconsistency exists between the other information and the basic financial statements, or the other information otherwise appears to be materially misstated. If, based on the work performed, we conclude that an uncorrected material misstatement of the other information exists, we are required to describe it in our report.

Other Reporting Required by *Government Auditing Standards*

In accordance with *Government Auditing Standards*, we have also issued our report dated December 7, 2023, on our consideration of the City's internal control over financial reporting and on our tests of its compliance with certain provisions of laws, regulations, contracts, and grant agreements and other matters. The purpose of that report is solely to describe the scope of our testing of internal control over financial reporting and compliance and the results of that testing, and not to provide an opinion on the effectiveness of the City's internal control over financial reporting or on compliance. That report is an integral part of an audit performed in accordance with *Government Auditing Standards* in considering the City's internal control over financial reporting and compliance.

The Pun Group, LLP

Santa Ana, California
December 7, 2023

As management of the City of Gardena (City), California, we offer readers of the City's financial statements this narrative overview and analysis of the financial activities of the City for the fiscal year ended June 30, 2023. We encourage readers to consider the information presented here in conjunction with additional information that we have furnished in our letter of transmittal, which can be found in the introductory section of this report, as well as with the City's financial statements, which follow this discussion.

Financial Highlights

- The liabilities and deferred inflows of resources of the City exceeded its assets and deferred outflows of resources at the close of the 2022-2023 fiscal year by ($18,994,010), which resulted in the City having a negative net position. The negative positions were due primarily to GASB Statements No. 68, *Accounting and Financial Reporting for Pensions*, GASB No. 75 *Accounting and Financial Reporting for Postemployment benefits other than pensions and Long-Term Liabilities -Due in more than one year*. The Net Pension Liabilities and Other post-employment benefits (OPEB) were included within the government-wide financial statements for both governmental and business-type financial reporting. At the close of 2022-2023 fiscal year, the City's Net Pension Liabilities were $16,120,826 and $3,233,030 for governmental and business-type activities for a total of $19,353,856. The City's Other post-employment benefit liabilities were $64,768,264 and $8,020,898 for governmental and business-type activities for a total of $72,789,162. The Long-Term Liabilities were $136,971,162 and $23,001,398 for governmental and business-type activities, respectively for a total of $159,972,560 including the amounts both due in one year and due in more than one year. of which $94,620,000 is for the 2020 Taxable Pension Obligation Bonds; $73,832,926 for governmental and $20,787,074 for business-type activities. The Long-Term Liabilities due in more than one year were of $124,731,948 and $21,553,550 for governmental and business-type activities, respectively for a total of $146,285,498.

- The City's total net position decreased by $11,722,047 in 2022-2023. Net position of governmental activities decreased by $11,732,421 while net position of business type activities increased by $10,374. The changes for governmental activities were due primarily to 1) Additional Sales Tax Revenue compared to the prior year in the amount of around $3 million as the economy continued to improve. 2) The Utility User Tax increased by $1.4 million from additional usage and higher utility prices. 3) The City's OPEB liability decreased by $11.5 million due to higher discount rate used for the actuarial valuation. 4) The City's expenses increased by about $46 million mainly due to the increase in pension liabilities.

- At the close of the 2022-2023 fiscal year, the City's governmental funds reported combined fund balances of $86,505,397, an increase of $12,835,393 in comparison to the prior year. General Fund increased by $8,312,823. The increase is due primarily to increases in Sales Tax Revenue for the Bradley Burns and Measure G sales tax revenue, which was higher than prior year by about $1.7 Million. The City's Use of Money and Property, primarily its return on investments increase by $3.4 million compared to the prior year because of higher investment returns and a greater fair market value on its investments. The City's General Fund expenditures, increased by approximately $5.5 million compared to the prior year as the City was over budget in the general fund by $992k. The Economic development grants special revenue fund increased by $200k, as a result of the City receiving additional Park in Lieu revenue due to the increase in City projects. The City Capital Projects fund remained the same ending fund balance compared to the last year. The City Debt Service fund increased by $396k as it maintained its principal and interest payments throughout the fiscal year.

Financial Highlights (Continued)

- At the end of the 2022-2023 fiscal year, the unrestricted fund balance (the total of the committed, assigned, and unassigned components of fund balance) for the General Fund was $49,811,191 or approximately 77% of total General Fund expenditures.

- The City's long-term debt decreased by $4,887,660 compared to prior year based on the City paying the annual debt service principal payments for the applicable debts during the fiscal year. In 2021-2022, the City issued a 2021 Lease Revenue Bond in the amount of $13.2 million dollars with a 20-year term at 1.98% true interest cost over the life of the bond.

Overview of the Financial Statements

The discussion and analysis provided here are intended to serve as an introduction to the City's basic financial statements. The City's basic financial statements consist of three components: 1) government-wide financial statements; 2) fund financial statements; and 3) the notes to financial statements. This report also includes supplementary information intended to furnish additional detail to support the basic financial statements themselves.

Government-wide Financial Statements. The *government-wide financial statements* are designed to provide readers with a broad overview of the City's finances, in a manner similar to a private-sector business.

The *statement of net position* presents financial information about all of the City's assets, deferred outflows of resources, liabilities, and deferred inflows of resources, with the difference reported as net position. Over time, increases or decreases in net position may serve as a useful indicator of whether the financial position of the City is improving or deteriorating.

The *statement of activities* presents information showing how the City's net position changed during the most recent fiscal year. All changes in net position are reported as soon as the underlying event giving rise to the change occurs, *regardless of the timing of related cash flows*. Thus, revenues and expenses are reported for some items that will only result in cash flows in future fiscal periods (e.g., uncollected taxes and earned but unused vacation leave).

Both of the government-wide financial statements distinguish functions of the City that are principally supported by taxes and intergovernmental revenues (*governmental activities*) from other functions that are intended to recover all or a significant portion of their costs through user fees and charges (*business-type activities*). The governmental activities of the City include general government, public safety, public works, community development, and recreation and human services. The business-type activities of the City include GTrans and the City's Sewer Maintenance Program.

The government-wide financial statements can be found on pages 20-23 of this report.

Fund Financial Statements. A *fund* is a grouping of related accounts that is used to maintain control over resources that have been segregated for specific activities or objectives. The City, like other state and local governments, uses fund accounting to ensure and demonstrate compliance with finance related legal requirements. All of the funds of the City can be divided into three categories: governmental funds, proprietary funds, and fiduciary funds.

Overview of the Financial Statements (Continued)

Governmental Funds. *Governmental funds* are used to account for essentially the same functions reported as *governmental activities* in the government-wide financial statements. However, unlike the government-wide financial statements, governmental fund financial statements focus on *near-term inflows and outflows of spendable resources*, as well as on *balances of spendable resources* available at the end of the fiscal year. Such information may be useful in assessing a government's near-term financing requirements.

Because the focus of governmental funds is narrower than that of the government-wide financial statements, it is useful to compare the information presented for *governmental funds* with similar information presented for *governmental activities* in the government-wide financial statements. By doing so, readers may better understand the long-term impact of the government's near-term financing decisions. Both the governmental fund balance sheet and the governmental fund statement of revenues, expenditures, and changes in fund balances provide a reconciliation to facilitate this comparison between *governmental funds* and *governmental activities.*

The City maintains thirteen (13) individual governmental funds. Information is presented separately in the governmental fund balance sheet and in the governmental fund statement of revenues, expenditures, and changes in fund balances for the General Fund, the Economic Development Grants Special Revenue Fund, City Debt Service Fund, and the Capital Projects Fund, which are considered to be major funds. Data from the other ten (9) governmental funds are combined into a single aggregated presentation. Individual fund data for each of these nonmajor governmental funds is provided in the form of combining statements in the combining and individual fund statements and schedules section of this report.

The City adopts an annual appropriated budget for its general fund. A budgetary comparison statement has been provided for the general fund to demonstrate compliance with this budget.

The governmental fund financial statements can be found on pages 28-34 of this report.

Proprietary Funds. The City maintains two (2) different types of proprietary funds. *Enterprise Funds* are used to report the same functions presented as *business-type activities* in the government-wide financial statements. The City uses enterprise funds to account for its transit operation and for its sewer maintenance. *Internal Service Funds* are an accounting device used to accumulate and allocate costs internally among the City's various functions. The City uses internal service funds to account for the management of its retained risks which includes liability insurance, workers' compensation, and health insurance. Because all of these services predominantly benefit governmental rather than business-type functions, they have been included within *governmental activities* in the government-wide financial statements.

Proprietary funds provide the same type of information as the government-wide financial statements, only in more detail. The proprietary fund financial statements provide separate information for the transit operation and for the sewer maintenance, both of which are considered to be major funds of the City. Conversely, internal service funds are combined into a single, aggregated presentation in the proprietary fund financial statements. Individual fund data for the internal service funds are provided in the form of combining statements in the combining and individual fund statements and schedules section of this report.

The proprietary fund financial statements can be found on pages 36-41 of this report.

Overview of the Financial Statements (Continued)

Notes to the Financial Statements. The notes provide additional information that is necessary to acquire a full understanding of the data provided in the government-wide and fund financial statements. The notes to the financial statements can be found on pages 45-97 of this report.

Other Information. In addition to the basic financial statements and accompanying notes, this report also presents *required supplementary information* concerning the City's funding its obligation to provide pension and OPEB benefits to its employees and includes Budgetary Comparison schedules for the General Fund and the Economic Development Grants Special Revenue Fund. Required supplementary information can be found on pages 101-123 of this report

The combining statements, referred to earlier in connection with nonmajor governmental funds and internal service funds, are presented immediately following the required supplementary information. Combining and individual fund statements and schedules can be found on pages 130-161 of this report.

Government-wide Overall Financial Analysis

As noted earlier, net position, over time, may serve as a useful indicator of a government's financial position. In the case of the City, liabilities and deferred inflows of resources exceeded assets and deferred outflows of resources by $18,944,010 at the close of the 2022-2023 fiscal year.

CITY OF GARDENA NET POSITION

	Governmental Activities		Business-type Activities		TOTAL	
	2023	2022*	2023	2022*	2023	2022*
Current and Non Current assets	$ 122,943,977	$ 108,775,385	$ 12,305,902	$ 11,074,930	$ 135,249,879	$ 119,850,315
Aggregate net pension assets	-	38,527,341	-	10,712,038	-	49,239,379
Capital assets	59,480,793	55,244,042	60,259,791	60,069,599	119,740,584	115,313,641
Total Assets:	182,424,770	202,546,768	72,565,693	81,856,567	254,990,463	284,403,335
Deferred outflow of resources related to pensions	37,950,104	42,960,563	7,455,416	1,293,367	45,405,520	44,253,930
Deferred outflow of resources related to OPEB	13,643,783	13,080,884	2,596,215	1,198,735	16,239,998	14,279,619
Total deferred outflows of resources:	51,593,887	56,041,447	10,051,631	2,492,102	61,645,518	58,533,549
Current liabilities	25,405,457	33,278,888	20,378,849	18,174,777	45,784,306	51,453,665
Non-current liabilities						
Long-term liabilities-Due in more than one year	124,731,948	120,071,123	21,553,550	22,558,077	146,285,498	142,629,200
Aggregate net pension liabilities	16,120,826	-	3,233,030	-	19,353,856	-
Aggregate net other postemployment benefits liabilities	64,768,264	76,280,979	8,020,898	6,448,522	72,789,162	82,729,501
Subtotal Non-current liabilities	205,621,038	196,352,102	32,807,478	29,006,599	238,428,516	225,358,701
Total Liabilities:	231,026,495	229,630,990	53,186,327	47,181,376	284,212,822	276,812,366
Deferred inflows of resources related to pensions	33,463,248	57,719,674	1,910,303	9,584,820	35,373,551	67,304,494
Deferred inflows of resources related to OPEB	14,968,157	4,944,373	1,025,461	1,097,614	15,993,618	6,041,987
Total deferred outflows of resources:	48,431,405	62,664,047	2,935,764	10,682,434	51,367,169	73,346,481
Net Investment in Capital Assets	43,557,695	40,126,502	59,138,198	59,701,427	102,695,893	99,827,929
Restricted	26,022,626	21,665,716	-	-	26,022,626	21,665,716
Unrestricted (deficit)	(115,019,564)	(95,499,040)	(32,642,965)	(33,216,568)	(147,662,529)	(128,715,608)
Total Net Position:	$ (45,439,243)	$ (33,706,822)	$ 26,495,233	$ 26,484,859	$ (18,944,010)	$ (7,221,963)

* 2022 balances were restated due to the implementation of GASB 96

Government-wide Overall Financial Analysis (Continued)

By far, the largest portion of the City's net position reflects its net investment in capital assets (e.g., land, buildings, machinery, equipment, vehicles, and infrastructure), less any related outstanding debt that was used to acquire those assets. The City uses these capital assets to provide a variety of services to its citizens. Accordingly, these assets are not available for future spending. Although the City's investment in capital assets is reported net of related debt, it should be noted that the resources used to repay this debt must be provided from other sources, since the capital assets themselves cannot be used to liquidate these liabilities.

The City's largest liabilities are their Long-term liabilities - Due in more than one year, which increased from $120,071,123 in 2021-2022 to $124,731,948 in fiscal year 2022-2023, or an increase of $4,660,825, mainly from the increase in claim payables, compensated absences, and the recording of subscription liability due to the implementation of GASB 96 *Subscription-Based Information Technology Arrangements* ("SBITA"). The other additional long-term liabilities are Other Post-Employment Benefits (OPEB) of $64,768,264, a decrease of $11.5 million compared to the prior year; this decrease is related to the increase of actuarial discount rate from 2.16% to 3.54%. for 20-year Municipal Bond Index, which helped reduce the estimated liabilities. These two liabilities total $189,500,212 for Governmental Activities, or 82%, of the total liability balance of $231,026,495 at June 30, 2023. The remaining noncurrent liability is the pension liability, which has an increase to $16,120,826 from having a net pension asset in the amount of $38,527,341 in fiscal year 2021-2022..

An additional portion of the City's net position (Restricted) represents resources that are subject to external restrictions on how they may be used. The remaining balance of $(147,662,529) is unrestricted and if positive, may be used to meet the government's ongoing obligations to its citizens and creditors which include the net debt, net pension liabilities, and OPEB liabilities.

At the end of the 2022-2023 fiscal year, the City is able to report positive balances in all reported categories of net position with the exception of unrestricted, both for the government as a whole, as well as for its separate governmental and business-type activities. The negative in unrestricted net position is a result of 1) Long term Liabilities- Due in more than one year which includes the pension bond debt as a result of the 2020 Taxable Pension Obligation Bond 2) GASB 75, which is for other post-employment benefit liabilities; 3) GASB 68, which is for pension liabilities.

The City's overall net position decreased by $11,722,047 from the prior fiscal year. The reasons for this overall decrease are discussed in the below sections for governmental activities and business-type activities.

Governmental Activities. During 2022-2023 fiscal year, net position for governmental activities decreased by $11,732,421 from the prior fiscal year for an ending balance of $(45,439,243). The decrease in the overall net position was primarily related to: 1) Total public safety expenses increased by $50.3 million compared to the prior year, which is due primarily to pension expense adjustment, lead overall expenses to increase by $46 million or 72% compared to the prior year. Revenues were up $1.6 million or 2% compared to the prior year.

Government-wide Overall Financial Analysis (Continued)

CITY OF GARDENA'S CHANGES IN NET POSITION

	Governmental Activities		Business -type Activities		TOTAL	
	2023	2022	2023	2022	2023	2022
Revenues:						
Program Revenues:						
Charges for services	$ 11,966,318	$ 17,326,360	$ 4,267,081	$ 4,254,880	$ 16,233,399	$ 21,581,240
Operating grants and contributions	5,814,708	4,081,043	22,744,442	22,018,364	28,559,150	26,099,407
Capital grants and contributions	3,329,828	2,511,878	3,186,920	3,915,704	6,516,748	6,427,582
General Revenues:						
Property taxes	9,985,883	9,186,838	-	-	9,985,883	9,186,838
Sales and other taxes	64,578,556	61,769,481	-	-	64,578,556	61,769,481
Investment income and miscellaneous	2,525,137	1,761,008	437,768	68,374	2,962,905	1,829,382
Total Revenues:	98,200,430	96,636,608	30,636,211	30,257,322	128,836,641	126,893,930
Expenses:						
General government	7,470,021	7,771,663	-	-	7,470,021	7,771,663
Public safety	77,971,300	27,964,662	-	-	77,971,300	27,964,662
Public works	10,737,606	11,239,762	-	-	10,737,606	11,239,762
Recreation and human services	8,229,820	7,566,226	-	-	8,229,820	7,566,226
Community development	2,266,794	5,946,949	-	-	2,266,794	5,946,949
Interest and fiscal charges	3,773,164	3,888,463	-	-	3,773,164	3,888,463
Enterprise operations	-	-	30,109,983	29,390,177	30,109,983	29,390,177
Total Expenses:	110,448,705	64,377,725	30,109,983	29,390,177	140,558,688	93,767,902
Increase (decrease) in Net Position before other revenues and transfers	(12,248,275)	32,258,883	526,228	867,145	(11,722,047)	33,126,028
Transfers	515,854	344,181	(515,854)	(344,181)	-	-
Change in Net Position	(11,732,421)	32,603,064	10,374	522,964	(11,722,047)	33,126,028
Net position- beginning of year	(33,706,822)	(66,309,886)	26,484,859	25,961,895	(7,221,963)	(40,347,991)
Net position - end of year	$ (45,439,243)	$ (33,706,822)	$ 26,495,233	$ 26,484,859	$ (18,944,010)	$ (7,221,963)

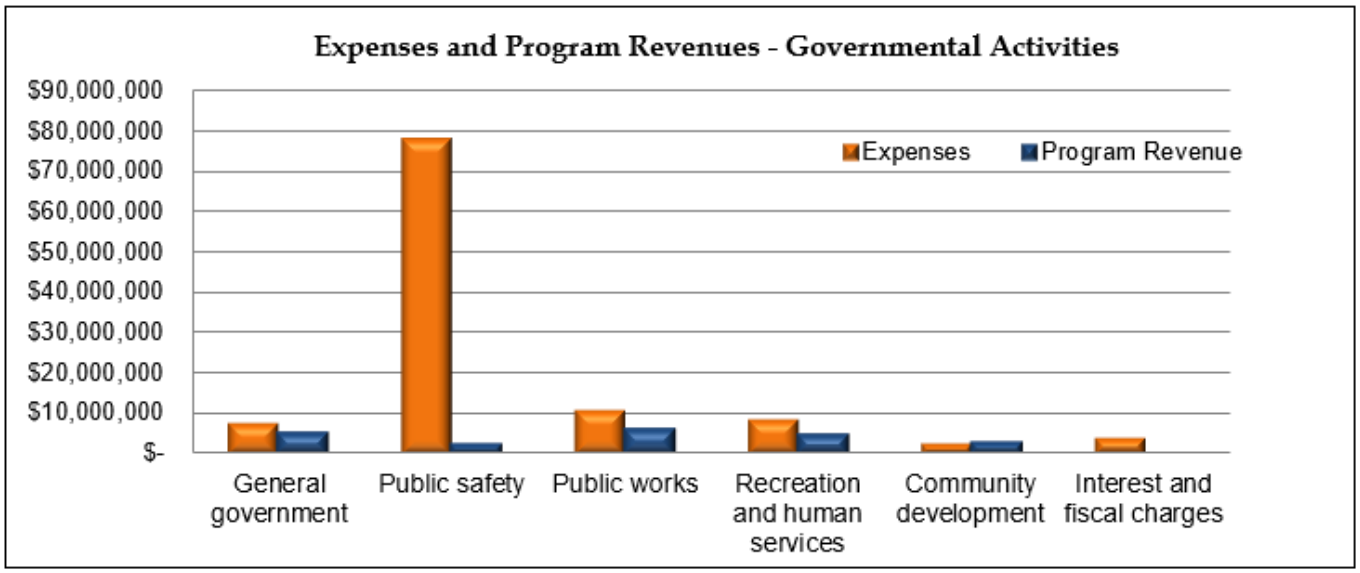

Government-wide Overall Financial Analysis (Continued)

Business-type Activities. In the 2022-2023 fiscal year, the City's *business-type activities* increased the net position by $10,374 compared to the prior year balance for the fiscal year ended June 30, 2023. Business-type activities revenue increased by $379k or 1.3% compared to the prior year for a total of $30,636,211 in revenues at year-end. In comparison to the prior fiscal year, the charges for services increased by $12,201 or 0.3% with charges for services remaining constant with prior years. Operating grants and contributions increased by $726,078 or 3.3% compared to the prior fiscal year, primarily due to increased liability claims and higher fuel prices. Therefore, GTrans used more operating subsidies to cover the shortfall. Capital grants and contributions decreased by $728,784 or 18.6% primarily due higher capital related expenses incurred in fiscal year 21-22 for the installation of the CNG station; the project is nearing completion resulting a decrease in the capital grants and contributions from the fiscal year 2021-2022 to the fiscal year 2022-2023. Investment income and miscellaneous increased by $369,394 or 540% compared to the prior year due to the City exploring additional investment options within its investment policy and earning significantly higher interest rates. Expenses for operations increased by $719,806 or 2.4% compared to prior year, which was largely due cost of living expenses paid to employees, higher increased liability claims and higher fuel prices.

Financial Analysis of Governmental Funds

As noted earlier, the City uses fund accounting to ensure and demonstrate compliance with finance-related legal requirements.

Governmental Funds. The focus of the City's *governmental funds* is to provide information about near-term inflows, outflows, and balances of spendable resources. Such information is useful in assessing the City's financing requirements. In particular, an unassigned fund balance may serve as a useful measure of a government's net resources available for discretionary use as they represent the portion of fund balance which has not yet been limited to use for a particular purpose by either an external party, the City itself, or a group or individual that has been delegated authority to assign resources for use for particular purposes by the City's Council.

On June 30, 2023, the City's governmental funds reported combined fund balances of $86,503,397 an increase of $12,835,393 or 17% in comparison with the prior year. Approximately (0.1%) of this amount is ($47,129) and constitutes an *unassigned fund balance,* which is available for spending at the government's discretion. The remainder of the fund balance is either *nonspendable, restricted, committed,* or assigned to indicate that it is: 1) not in spendable form $638,503; 2) restricted for purposes $36,402,832 ; 3) committed for purposes $26,848,674 ; or 4) assigned for purposes $22,662,517.

The General Fund is the chief operating fund of the City. At the end of the 2022-2023 fiscal year, the unassigned fund balance of the General Fund was $300,000, while the total fund balance increased from $41,825,774 to $50,138,597, an increase of $8,312,823 or a 20% increase from the prior year. As a measure of the General Fund's liquidity, it may be useful to compare both the unassigned fund balance and the total fund balance to total general fund expenditures. Unassigned fund balance represents approximately 0.5% of total general fund expenditures, while total fund balance represents approximately 77% of that same amount.

Financial Analysis of Governmental Funds (Continued)

The fund balance of the City's General Fund increased by $8,312,823 during the 2022-2023 fiscal year. The Top 5 Revenue generators, which make up 74% of the General Fund Original Adopted Budget for Fiscal Year 2022-2023, was up $5.7 million compared to the budgeted amount or 10% ; 1) Sales Tax revenue for the Bradley Burns 1.0% was up $807k compared to budget and Sales Tax from Measure G .75% was up $2.3 million compared to the budget for a total increase of overall sales tax of $3.1 million as a majority of the sales tax generators did significantly better than expected ; 2) Card Club revenue was down $207k compared to the budget as mainly due to slow recovery from Lucky Lady Casino; 3) Property Taxes were up $981k compared to budget with the continued thriving development in the City and higher housing prices in the region; 4) Utility Users Tax increased by $1.4 million from higher utility prices; and 5) Motor Vehicle In-Lieu increased by $443k from the budget primarily based on updated fee rates.

The Economic Development Grants Special Revenue Fund, a major fund, had an increase of $213k in fund balance during the fiscal year primarily due to an additional park in lieu related fees for the various development projects within the city that were completed in the fiscal year.

The Debt Service Fund, a major fund, had an increase of $396k in fund balance during the fiscal year, due to the interest income from remaining project balance in the 2021 Lease Revenue Bond. The 2021 Lease Revenue Bond will be used to fund a portion of the new Gardena Community Aquatic & Senior Center, the cost of acquiring and renovating an existing building to be converted into a new Community Center and various park improvements.

The Capital Projects Fund, a major fund, had a fund balance of $301,897. During the fiscal year, the expenditures for this fund were being reimbursed by the project funding sources such as local and state grants. Therefore, no changes in the fund balance for the fiscal year.

Proprietary Funds. The City's proprietary funds provide the same type of information found in the government-wide financial statements, but in more detail.

Unrestricted net position of GTrans at the end of the fiscal year was $(24,503,020) and for the Sewer Fund was $2,530,500. The total decrease in net position for GTrans was $522k and the Sewer Fund net position increased by $568k, respectively. GTrans decrease in net position was due to the increases in transit operation. The Sewer Fund increase is based on the delay in starting several capital projects and the expenditures savings related to that.

General Fund Budgetary Highlights

The final budget for revenue was not amended and stayed the same as the original adopted budget of $72,607,910. Actual revenue compared to the final budget was up by $7.2 million or 10% compared to the final budget. This is primarily a result of an increase in sales tax revenue compared to the budget of about $3 million, an increase of $1.4 million for utility users tax compared to budget and overall, a rebound for the economy. A detailed budgetary comparison schedule for the year ended June 30, 2023, is presented as required supplementary information following the notes to the financial statements.

General Fund Budgetary Highlights (Continued)

The final amended budget for combined General Fund expenditures was the same as the original budget, of $63,812,789. Actual expenditures were more than the final budget by around $990k or 1.6% percent, which was primarily the result of additional capital expenditures. A detailed budgetary comparison schedule for the year ended June 30, 2023, is presented as required supplementary information following the notes to the financial statements.

Capital Assets and Debt Administration

Capital Assets. The City's investment in capital assets for its governmental and business-type activities as of June 30, 2023, amounts to $119,740,584 (net of accumulated depreciation and amortization). This investment in capital assets includes land, buildings, machinery, equipment, vehicles, park facilities, roads, highways, and right to use assets – lease and SBITA assets. The total increase in capital assets compared to prior year was $4,426,943 or 3.8%, primarily due to more capital projects being started in 2022-2023 fiscal year.

CITY OF GARDENA'S CAPITAL ASSETS
(Net of depreciation and amortization)

	Governmental Activities		Business -type Activities		TOTAL	
	2023	2022*	2023	2022*	2023	2022*
Non-depreciable assets:						
Land	$11,820,349	$11,544,572	$12,956,405	$12,956,405	$ 24,776,754	$ 24,500,977
Monuments	63,893	63,893	-	-	63,893	63,893
Construction in progress	6,710,764	2,247,985	7,804,434	4,870,249	14,515,198	7,118,234
Total Non-depreciable assets	18,595,006	13,856,450	20,760,839	17,826,654	39,355,845	31,683,104
Capital assets/lease assets, being depreciated:						
Building/structures and improvements	6,788,845	7,085,119	25,061,258	26,084,166	31,850,103	33,169,285
Buses	-	-	11,269,526	12,495,655	11,269,526	12,495,655
Machinery and equipment	2,534,126	2,963,820	2,265,913	2,655,548	4,800,039	5,619,368
Furniture and fixtures	-	-	64,130	94,586	64,130	94,586
Infrastructure	-	-	522,181	555,870	522,181	555,870
Street lights network	4,414,965	4,458,045	-	-	4,414,965	4,458,045
Traffic lights network	251,386	263,956	-	-	251,386	263,956
Roadway network	25,320,709	25,538,346	-	-	25,320,709	25,538,346
Total depreciable assets (net)	39,310,031	40,309,286	39,183,008	41,885,825	78,493,039	82,195,111
Intangible assets, being amortized						
Right-to-use lease assets	457,035	323,168	13,242	152,056	470,277	475,224
Right-to-use subscription assets	1,118,721	755,138	302,702	205,064	1,421,423	960,202
Total intangible assets, (net)	1,575,756	1,078,306	315,944	357,120	1,891,700	1,435,426
Total capital assets	$59,480,793	$55,244,042	$60,259,791	$60,069,599	$ 119,740,584	$ 115,313,641

* 2022 amounts were restated due to implementation of GASB 96

Capital Assets and Debt Administration (Continued)

Major capital asset events during the 2022-2023 fiscal year included the following:

- Acquisition of a property locate at 1731 W 162nd Street
- Completion of 170th Street Improvement project
- Completion of Pedestrian Safety Improvement project
- Acquisition of a new street sweeper truck

Additional information on the City's capital assets can be found in Note 7 on pages 67-68 of this report.

Long-term Debt. At the end of the 2022-2023 fiscal year, the City had total bonded debt outstanding of $130,485,822. The City's long-term debt decreased by $4,887,660 or 3.6% compared to prior year based on the City paying the annual debt service principal payments for the applicable debts below during the fiscal year.

CITY OF GARDENA'S OUTSTANDING DEBT

	Governmental Activities		Business-Type Activities		TOTAL	
	2023	2022*	2023	2022*	2023	2022*
Refunding Revenue Bonds	$ 9,945,000	$ 10,130,000	$ -	$ -	$ 9,945,000	$ 10,130,000
Certificates of Participation	5,940,000	6,565,000	-	-	5,940,000	6,565,000
Direct Purchase Lease	285,000	565,000	-	-	285,000	565,000
- Bond discount	(178,289)	(192,173)	-	-	(178,289)	(192,173)
Pension Obligation Bonds	73,832,926	76,692,725	20,787,074	21,592,275	94,620,000	98,285,000
Lease Revenue Bonds	12,440,000	12,880,000	-	-	12,440,000	12,880,000
- Bond premium	1,902,003	2,008,657	-	-	1,902,003	2,008,657
SCE On-Bill Financing Loan	29,065	43,361	-	-	29,065	43,361
Loan Payable	3,718,327	3,632,103	-	-	3,718,327	3,632,103
Lease Payable	459,635	337,409	13,353	158,923	472,988	496,332
Subscription liabilites	1,032,161	755,138	279,567	205,064	1,311,728	960,202
	$ 109,405,828	$ 113,417,220	$ 21,079,994	$ 21,956,262	$130,485,822	$ 135,373,482

* 2022 amounts were restated due to implementation of GASB 96

The City maintains an existing lease rating of "A+" rating from Standard & Poor's and an "A1" rating with Moody's for its general fund lease supported debt as of June 30, 2023. The City's issuer ratings are "AA-" with S & P and "Aa3" with Moody's.

Additional information about the City's long-term debt can be found in Note 8 on pages 69-76 of this report.

Economic Factors and Next Year's Budget and Rates

As a result of the City's fiscally conservative approach taken these past couple of years, the City finds itself in a financially stable position, which allowed the City in its adopted budget for fiscal year 2023-2024, to budget for and add a total of 20 full-time equivalent (FTE) positions, as well as investments in seniors, youth and community service programs and the largest budgeted Capital Improvement Program in the Cities history with over $50 million budgeted for the next fiscal years.

Economic Factors and Next Year's Budget and Rates (Continued)

The City adopted Fiscal Year 2023-2024 budget on June 27, 2023. The General Fund Revenue Budget for 2023-2024 was $82,002,199 with expenditures of $81,831,342 for a surplus of $170,857.

In 2023-2024 the Top 5 Adopted Budgeted General Fund revenue sources, which make up 73% of the City's General Fund, include: 1) Sales and Use Tax - $27.2 million (33%), 2) Property Taxes - $9.9 million (12%), 3) Card Club Gross Revenue Fees - $9.2 million (11%) 4) Vehicle License Fees - $7.9 million (10%), and 5) Utility Users Tax - $6.1 million (7%).

In 2023-2024 the General Fund expenditures were $81,831,342, with the Police Department making up $34.8 million or 43%, Non-Departmental (including the Fire Department and our South Bay Regional Public Communications Authority) $14.6 million or 18%, Transfers Out at $8.6 million or 11%, Public Works at $7 million or 9%, Recreation and Human Services at $5.1 million or 6%, Debt Service Payments at $3 million or 4%, Elected and City Managers Offices at $2.9 million or 3%, Community Development Department at $3 million or 3% and the Administrative Services Department at $2.7 million or 3%.

As we look to futures years the economy and threats on an economic slowdown loom, however the City is well prepared to face these events if they do occur as we are very fortunate to have a stable diverse economic base, which somewhat shields our economy from downturns in any specific category.

Requests for Information

This financial report is designed to provide our citizens, taxpayers, customers, investors, and creditors with a general overview of the City's and to show the city's accountability for the money it receives. If you have questions about this report or need additional financial information, contact the Administrative Services Department, 1700 W. 162nd Street, Gardena, CA 90247.

City of Gardena

Annual Comprehensive Financial Report
For the Year Ended June 30, 2023

(This page is intentionally left blank)

BASIC FINANCIAL STATEMENTS

City of Gardena

Annual Comprehensive Financial Report
For the Year Ended June 30, 2023

(This page is intentionally left blank)

GOVERNMENT-WIDE FINANCIAL STATEMENTS

City of Gardena
Statement of Net Position
June 30, 2023

	Primary Government		
	Governmental Activities	Business-Type Activities	Total
ASSETS			
Current assets:			
Cash and investments	$ 77,295,313	$ 25,240,370	$ 102,535,683
Receivables, net	9,828,824	465,249	10,294,073
Due from other governments	1,640,783	3,525,434	5,166,217
Internal balances	17,763,827	(17,763,827)	-
Prepaid items	611,065	94,032	705,097
Inventories	42,815	744,644	787,459
Total current assets	107,182,627	12,305,902	119,488,529
Noncurrent assets:			
Restricted cash and investments:			
Cash with fiscal agent	13,807,281	-	13,807,281
Loans receivable	1,954,069	-	1,954,069
Capital assets:			
Capital assets, not being depreciated	18,595,006	20,760,839	39,355,845
Capital assets, being depreciated	39,310,031	39,183,008	78,493,039
Intangible asset, being amortized	1,575,756	315,944	1,891,700
Total capital assets	59,480,793	60,259,791	119,740,584
Total noncurrent assets	75,242,143	60,259,791	135,501,934
Total assets	182,424,770	72,565,693	254,990,463
DEFERRED OUTFLOWS OF RESOURCES			
Deferred outflows of resources related to pensions	37,950,104	7,455,416	45,405,520
Deferred outflows of resources related to other postemployment benefits	13,643,783	2,596,215	16,239,998
Total deferred outflows of resources	51,593,887	10,051,631	61,645,518

See accompanying Notes to the Basic Financial Statements.

City of Gardena
Statement of Net Position (Continued)
June 30, 2023

	Primary Government		
	Governmental Activities	Business-Type Activities	Total
LIABILITIES			
Current liabilities:			
Accounts payable	4,034,667	1,190,158	5,224,825
Accrued liabilities	442,528	110,148	552,676
Salaries and benefits payable	565,327	244,222	809,549
Retention payable	116,252	-	116,252
Deposits payable	3,901,464	-	3,901,464
Unearned revenue	3,167,314	17,386,473	20,553,787
Accrued interest payable	938,691	-	938,691
Compensated absences - due within one year	1,853,798	384,281	2,238,079
Claims payable - due within one year	4,811,358	-	4,811,358
Long-term debt - due within one year	5,574,058	1,063,567	6,637,625
Total current liabilities	25,405,457	20,378,849	45,784,306
Noncurrent liabilities:			
Compensated absences - due in more than one year	7,371,178	1,537,123	8,908,301
Claims payable - due in more than one year	13,529,000	-	13,529,000
Long-term debt - due in more than one year	103,831,770	20,016,427	123,848,197
Aggregate net pension liabilities	16,120,826	3,233,030	19,353,856
Aggregate net other postemployment benefits liabilities	64,768,264	8,020,898	72,789,162
Total noncurrent liabilities	205,621,038	32,807,478	238,428,516
Total liabilities	231,026,495	53,186,327	284,212,822
DEFERRED INFLOWS OF RESOURCES			
Deferred inflows of resources related to pensions	33,463,248	1,910,303	35,373,551
Deferred inflows of resources related to other postemployment benefits	14,968,157	1,025,461	15,993,618
Total deferred inflows of resources	48,431,405	2,935,764	51,367,169
NET POSITION			
Net investment in capital assets	43,557,695	59,138,198	102,695,893
Restricted for:			
Law enforcement	1,414,499	-	1,414,499
Local street improvements	14,126,722	-	14,126,722
Economic development	6,965,240	-	6,965,240
Other purposes	1,219,550	-	1,219,550
Capital projects	301,897	-	301,897
Debt service	1,994,718	-	1,994,718
Total restricted	26,022,626	-	26,022,626
Unrestricted (deficit)	(115,019,564)	(32,642,965)	(147,662,529)
Total net position (deficit)	$ (45,439,243)	$ 26,495,233	$ (18,944,010)

See accompanying Notes to the Basic Financial Statements.

City of Gardena
Statement of Activities
For the Year Ended June 30, 2023

Functions/Programs	Expenses	Program Revenues: Charges for Services	Program Revenues: Operating Grants and Contributions	Program Revenues: Capital Grants and Contributions	Program Revenues: Total Program Revenues
Governmental activities:					
General government	$ 7,470,021	$ 4,149,501	$ 933,906	$ -	$ 5,083,407
Public safety	77,971,300	1,251,096	906,496	46,616	2,204,208
Public works	10,737,606	396,408	2,608,302	3,153,416	6,158,126
Recreation and human services	8,229,820	3,647,400	1,137,758	-	4,785,158
Community development	2,266,794	2,521,913	228,246	129,796	2,879,955
Interest and fiscal charges	3,773,164	-	-	-	-
Total governmental activities	110,448,705	11,966,318	5,814,708	3,329,828	21,110,854
Business-type Activities:					
GTrans	28,643,376	1,793,580	22,744,442	3,186,920	27,724,942
Sewer	1,466,607	2,473,501	-	-	2,473,501
Total business-type activities	30,109,983	4,267,081	22,744,442	3,186,920	30,198,443
Total primary government	$ 140,558,688	$ 16,233,399	$ 28,559,150	$ 6,516,748	$ 51,309,297

See accompanying Notes to the Basic Financial Statements.

City of Gardena
Statement of Activities (Continued)
For the Year Ended June 30, 2023

Functions/Programs	Net (Expense) Revenue and Changes in Net Position		
	Governmental Activities	Business-Type Activities	Total
Governmental activities:			
General government	$ (2,386,614)	$ -	$ (2,386,614)
Public safety	(75,767,092)	-	(75,767,092)
Public works	(4,579,480)	-	(4,579,480)
Recreation and human services	(3,444,662)	-	(3,444,662)
Community development	613,161	-	613,161
Interest and fiscal charges	(3,773,164)	-	(3,773,164)
Total governmental activities	(89,337,851)	-	(89,337,851)
Business-type Activities:			
GTrans	-	(918,434)	(918,434)
Sewer	-	1,006,894	1,006,894
Total business-type activities	-	88,460	88,460
Total primary government	(89,337,851)	88,460	(89,249,391)
General revenues and transfers:			
General revenues:			
Taxes:			
Property taxes	9,985,883	-	9,985,883
Sales taxes	29,662,286	-	29,662,286
Business license	2,733,939	-	2,733,939
Utility users taxes	6,317,851	-	6,317,851
Franchise taxes	3,275,380	-	3,275,380
Card club	8,633,144	-	8,633,144
Other taxes	5,882,066	-	5,882,066
Total taxes	66,490,549	-	66,490,549
Vehicle license - unrestricted	8,073,890	-	8,073,890
Investment income (loss)	1,881,428	437,768	2,319,196
Miscellaneous	643,709	-	643,709
Total general revenues	77,089,576	437,768	77,527,344
Transfers	515,854	(515,854)	-
Changes in net position	(11,732,421)	10,374	(11,722,047)
Net position (deficit) - beginning of year	(33,706,822)	26,484,859	(7,221,963)
Net position (deficit) - end of year	$ (45,439,243)	$ 26,495,233	$ (18,944,010)

See accompanying Notes to the Basic Financial Statements.

City of Gardena

Annual Comprehensive Financial Report
For the Year Ended June 30, 2023

(This page is intentionally left blank)

FUND FINANCIAL STATEMENTS

Governmental Fund Financial Statements
Proprietary Fund Financial Statements
Fiduciary Fund Financial Statements

City of Gardena

Annual Comprehensive Financial Report
For the Year Ended June 30, 2023

(This page is intentionally left blank)

GOVERNMENTAL FUND FINANCIAL STATEMENTS

General Fund - To account for and report all financial resources not accounted for and reported in another fund.

Economic Development Grants Special Revenue Fund - To account for the fourteenth funds used for housing, environmental issues, and land use improvement. Six of the funds receive pass-through funding from the California U.S. Department of Housing and Urban Development ("HUD") or program income to assist cities and counties to create and retain affordable housing and community projects. Eligible activities include housing rehabilitation loans to benefit lower income owners and loans for development of the low-income senior rental property. One fund is used to provide park or recreational facilities using fees received from the developers as required by the City's ordinance. Two funds receive funding from the U.S. Environmental Protection Agency ("EPA"). These grants are used to empower communities and other stakeholders in economic redevelopment to work together in a timely manner to prevent, assess, safely clean up, and sustainably use brownfields (previously unusable land) reuse contaminated properties. Two funds receive funding from the California Department of Housing and Community Development ("HCD") to assist local government for the preparation, adoption, and implementation of planning and process improvements that streamline housing approvals and accelerate housing production. One fund to account for development impact fee to provide infrastructure and facility improvements as required by City's ordinance. One fund to account for a community project grant from the California Department of Technology (DOT).

City Capital Projects Fund - Represents the financial resources that are restricted, committed or assigned to expenditures for capital outlay.

City Debt Service Fund - To account for and report financial resources that are restricted, committed or assigned to expenditure for principal and interest.

Nonmajor Governmental Funds - To account for the aggregate of all the nonmajor governmental funds.

City of Gardena
Balance Sheet
Governmental Funds
June 30, 2023

	Major Funds			
	General Fund	Economic Development Grants Special Revenue	City Capital Projects	City Debt Service
ASSETS				
Cash and investments	$ 38,039,882	$ 4,926,269	$ 1,946,318	$ -
Cash and investments with fiscal agents	-	-		13,807,281
Receivables:				
Accounts	928,809	216,071		-
Taxes	7,263,471	-		-
Interest	49,661	-		-
Employees	36,526	-		-
Loans	-	1,954,069		-
Inventories	42,815	-		-
Prepaid items and deposits	284,591	-		291,500
Due from other governments	-	-		-
Due from other funds	10,024,791	-		-
Total assets	$ 56,670,546	$ 7,096,409	$ 1,946,318	$ 14,098,781
LIABILITIES, DEFERRED INFLOWS OF RESOURCES AND FUND BALANCES				**I**
Liabilities:				
Accounts payable	$ 1,749,770	$ 32,454	$ 1,528,644	$ -
Accrued liabilities	126,101	-		291
Salaries and benefits payable	542,368	-		-
Due to other funds	-	261,773		349,271
Unearned revenue	114,128	-		-
Retention payable	-	475	115,777	-
Deposits payable	3,901,464	-		-
Total liabilities	6,433,831	294,702	1,644,421	349,562
Deferred inflows of resources:				
Unavailable revenue	98,118	86,275	-	-
Total deferred inflows of resources	98,118	86,275	-	-
Fund balances:				
Nonspendable	327,406	-	-	291,500
Restricted	-	6,715,432	301,897	13,746,868
Committed	26,848,674	-	-	-
Assigned	22,662,517	-	-	-
Unassigned (deficit)	300,000	-	-	(289,149)
Total fund balances	50,138,597	6,715,432	301,897	13,749,219
Total liabilities, deferred inflows of resources, and fund balances	$ 56,670,546	$ 7,096,409	$ 1,946,318	$ 14,098,781

(Continued)

See accompanying Notes to the Basic Financial Statements.

City of Gardena
Balance Sheet (Continued)
Governmental Funds
June 30, 2023

	Nonmajor Governmental Funds	Total Governmental Funds
ASSETS		
Cash and investments	$ 19,904,788	$ 64,817,257
Cash and investments with fiscal agents	-	13,807,281
Receivables:		
Accounts	1,177,248	2,322,128
Taxes	151,303	7,414,774
Interest	-	49,661
Employees	-	36,526
Loans	-	1,954,069
Inventories	-	42,815
Prepaid items and deposits	19,597	595,688
Due from other governments	1,640,783	1,640,783
Due from other funds	-	10,024,791
Total assets	$ 22,893,719	$ 102,705,773
LIABILITIES, DEFERRED INFLOWS OF RESOURCES AND FUND BALANCES		
Liabilities:		
Accounts payable	$ 627,839	$ 3,938,707
Accrued liabilities	3,046	129,438
Salaries and benefits payable	22,959	565,327
Due to other funds	2,320,365	2,931,409
Unearned revenue	3,053,186	3,167,314
Retention payable	-	116,252
Deposits payable	-	3,901,464
Total liabilities	6,027,395	14,749,911
Deferred inflows of resources:		
Unavailable revenue	1,266,072	1,450,465
Total deferred inflows of resources	1,266,072	1,450,465
Fund balances:		
Nonspendable	19,597	638,503
Restricted	15,638,635	36,402,832
Committed	-	26,848,674
Assigned	-	22,662,517
Unassigned (deficit)	(57,980)	(47,129)
Total fund balances	15,600,252	86,505,397
Total liabilities, deferred inflows of resources, and fund balances	$ 22,893,719	$ 102,705,773

(Concluded)

See accompanying Notes to the Basic Financial Statements.

City of Gardena

Annual Comprehensive Financial Report
For the Year Ended June 30, 2023

(This page is intentionally left blank)

City of Gardena
Reconciliation of the Governmental Funds Balance Sheet to the Government-Wide Statement of Net Position
June 30, 2023

Total Fund Balances - Total Governmental Funds		$ 86,505,397
Amounts reported for governmental activities in the statement of net position are different because:		
Capital assets used in governmental activities are not financial resources and are not reported in the funds:		
Amount reported in government-wide statement of position:		
Capital assets, not being depreciated	$ 18,595,006	
Capital assets, depreciable	117,086,015	
Less accumulated depreciation	(77,775,984)	
Right-to-use lease assets	729,511	
Right-to-use lease assets accumulated amortization	(272,476)	
Right-to-use subscription assets	1,456,363	
Right-to-use subscription assets accumulated amortization	(337,642)	59,480,793
Interest is recognized when due, and therefore, interest payable is not reported in the governmental funds.		(938,691)
Long-term liabilities were not due and payable in the current period. Therefore, they were not reported in the Governmental Funds' Balance Sheet.		
Long-term debt - due within one year		(5,574,058)
Long-term debt - due in more than one year		(103,831,770)
Compensated absences - due within one year		(1,853,798)
Compensated absences - due in more than one year		(7,371,178)
Net pension liability and the related deferred outflows of resources and deferred inflows of resources are not due and payable in the current period or not available for current expenditures and are not reported in the governmental fund financial statements:		
Pension related deferred outflows of resources		37,950,104
Aggregate net pension liabilities		(16,120,826)
Pension related deferred inflows of resources		(33,463,248)
Net other postemployment benefits liability and the related deferred outflows of resources and deferred inflows of resources are not due and payable in the current period or not available for current expenditures and are not reported in the governmental fund financial statements:		
OPEB related deferred outflows of resources		13,643,783
Aggregate net OPEB liabilities		(64,768,264)
OPEB related deferred inflows of resources		(14,968,157)
Internal service funds are used by management to charge the costs of general liability, workers' compensation and health benefit claims to individual funds. The assets and liabilities of the internal service funds are included in the governmental activities in the Government-Wide Statement of Net Position (net of $10,670,445 allocated to business-type activities).		4,420,205
Revenues earned but not available to pay for current expenditures for governmental funds are unavailable.		1,450,465
Net position of governmental activities		$ (45,439,243)

See accompanying Notes to the Basic Financial Statements.

City of Gardena
Statement of Revenues, Expenditures, and Changes in Fund Balances
Governmental Funds
For the Year Ended June 30, 2023

	Major Funds			
	General Fund	Economic Development Grants Special Revenue	City Capital Projects	City Debt Service
REVENUES:				
Taxes	$ 68,777,353	$ -	$ -	$ -
Licenses and permits	2,158,749	-	-	-
Intergovernmental	689,683	275,975	-	-
Charges for services	5,659,983	64,000	-	-
Fines, forfeitures, and penalties	927,536	270,000	-	-
Use of money and property	978,751	94,535	-	416,554
Miscellaneous	613,793	54	-	-
Total revenues	79,805,848	704,564	-	416,554
EXPENDITURES:				
Current:				
General government	6,200,328	-	-	-
Public safety	42,010,381	-	-	-
Public works	6,887,999	-	-	-
Recreation and human services	4,005,992	-	-	-
Community development	2,620,660	183,002	-	-
Capital outlay	2,454,195	-	6,345,749	-
Debt service:				
Principal retirement	592,688	-	-	4,389,799
Interest and fiscal charges	32,659	-	-	3,715,933
Total expenditures	64,804,902	183,002	6,345,749	8,105,732
EXCESS OF REVENUES OVER (UNDER) EXPENDITURES	15,000,946	521,562	(6,345,749)	(7,689,178)
OTHER FINANCING SOURCES (USES):				
Transfers in	3,277,369	1,729	6,345,749	8,142,958
Transfers out	(11,044,788)	(310,525)	-	(57,771)
Proceeds from sale of assets	31,153	-	-	-
Issuance of debt	1,048,143	-	-	-
Total other financing sources (uses)	(6,688,123)	(308,796)	6,345,749	8,085,187
NET CHANGES IN FUND BALANCES	8,312,823	212,766	-	396,009
FUND BALANCES:				
Beginning of year	41,825,774	6,502,666	301,897	13,353,210
End of year	$ 50,138,597	$ 6,715,432	$ 301,897	$ 13,749,219

(Continued)

See accompanying Notes to the Basic Financial Statements.

City of Gardena
Statement of Revenues, Expenditures, and Changes in Fund Balances (Continued)
Governmental Funds
For the Year Ended June 30, 2023

	Nonmajor Governmental Funds	Total Governmental Funds
REVENUES:		
Taxes	$ 5,470,185	$ 74,247,538
Licenses and permits	-	2,158,749
Intergovernmental	11,300,325	12,265,983
Charges for services	-	5,723,983
Fines, forfeitures, and penalties	37,878	1,235,414
Use of money and property	391,591	1,881,431
Miscellaneous	106,463	720,310
Total revenues	17,306,442	98,233,408
EXPENDITURES:		
Current:		
General government	7,823	6,208,151
Public safety	317,596	42,327,977
Public works	1,547,998	8,435,997
Recreation and human services	4,215,698	8,221,690
Community development	33,446	2,837,108
Capital outlay	16,898	8,816,842
Debt service:		
Principal retirement	70,502	5,052,989
Interest and fiscal charges	2,275	3,750,867
Total expenditures	6,212,236	85,651,621
EXCESS OF REVENUES OVER (UNDER) EXPENDITURES	11,094,206	12,581,787
OTHER FINANCING SOURCES (USES):		
Transfers in	321,494	18,089,299
Transfers out	(7,504,845)	(18,917,929)
Proceeds from sale of assets	2,940	34,093
Issuance of debt	-	1,048,143
Total other financing sources (uses)	(7,180,411)	253,606
NET CHANGES IN FUND BALANCES	3,913,795	12,835,393
FUND BALANCES:		
Beginning of year	11,686,457	73,670,004
End of year	$ 15,600,252	$ 86,505,397

(Concluded)

See accompanying Notes to the Basic Financial Statements.

City of Gardena

Reconciliation of the Governmental Funds Statement of Revenues, Expenditures, and Changes in Fund Balances to the Government-Wide Statement of Activities and Changes in Net Position
For the Year Ended June 30, 2023

Net change in fund balances - total governmental funds:		$ 12,835,393
Amounts reported for governmental activities in the Statement of Activities are different because:		
Acquisition of capital assets was reported as expenditures in the governmental funds. However, in the Government-Wide Statement of Activities, the cost of those assets was allocated over the estimated useful lives as depreciation expense. The following was the amount of capital assets recorded in the current period:		
Capital outlay ($1,061,597) of capital outlay expenditures were for current public works expenditures for repairs and maintenance and therefore, were not capitalized).		7,755,245
The net effect of disposal of capital assets.		(3,577)
Depreciation and amortization expenses on capital, lease, and subscription assets were reported in the Government-Wide Statement of Activities, but they did not require the use of current financial resources. Therefore, depreciation and amortization expenses were not reported as an expenditure in the governmental funds.		(3,514,917)
The fund financial statements record interest expenditures on the current financial resources measurement focus whereas the Government-Wide financial statements recognize interest expense on the accrual basis. The reconciling amount was the change in accrued interest from the prior year.		(28,843)
Long-term compensated absences expense was reported in the Government-Wide Statement of Activities, but it did not require the use of current financial resources. Therefore, the change in long-term compensated absences was not reported as an expenditure in the governmental funds.		(466,145)
Other postemployment benefits and pension expenses were reported in the Government-Wide Statement of Activities, but it did not require the use of current financial resources. Therefore, the increase in other postemployment benefits liability and net pension liabilities were not reported as an expenditure in the governmental funds.		
OPEB expense net of contribution made after measurement date reported in deferred outflows of resources in the Government-Wide Statement of Net Position but reported as OPEB expenditures in the governmental funds in the amount of $4,966,034.		2,051,830
Pension credit net of contribution made after measurement date reported in deferred outflows of resources in the Government-Wide Statement of Net Position but reported as pension expenditures in the governmental funds in the amount of $4,130,399.		(35,402,200)
Proceeds from long-term debt provided current financial resources to governmental funds, but issuing debt increased long-term liabilities in the Government-Wide Statement of Net Position. Repayment of bond principal was an expenditure in the governmental funds, but the repayment reduced long-term liabilities in the Government-Wide Statement of Net Position.		
Principal repayments of long-term debt	$ 5,052,989	
Interest accrual on loans payables	(86,224)	
Proceeds from issuance of long-term debt	(1,048,143)	
Amortization of bond premium	106,654	
Amortization of bond discount	(13,884)	4,011,392
Internal service funds were used by management to charge the costs of certain activities, such as insurance, to individual funds. The net revenue of the internal service funds was reported with governmental activities (net of ($35,737) allocated to business-type activities).		1,092,895
Unavailable revenue is not recognized as revenue in the governmental funds since the revenue is not available to fund expenditures of the current year.		(63,494)
Change in net position of governmental activities		$ (11,732,421)

See accompanying Notes to the Basic Financial Statements.

PROPRIETARY FUND FINANCIAL STATEMENTS

GTrans Enterprise Fund - To account for user charges, fees, federal, state and county grants and all operating costs associated with the operation of the City's bus line.

Sewer Enterprise Fund (Nonmajor) - To account for user charges, fees and all operating costs associated with the operation, maintenance, upgrade and periodic reconstructions of the City's sanitary sewer system.

Internal Service Funds - To account for financing of goods and services provided by one department (general liability, workers' compensation, and health benefits) to other departments of the City on a cost-reimbursement basis.

City of Gardena
Statement of Net Position
Proprietary Funds
June 30, 2023

	Business-Type Activities			Governmental Activities
	GTrans Enterprise Fund	Nonmajor Sewer Enterprise Fund	Total	Internal Service Funds
ASSETS				
Current assets:				
Cash and investments	$ 21,522,326	$ 3,718,044	$ 25,240,370	$ 12,478,056
Restricted cash	-	-	-	-
Accounts receivable, net	248,542	216,707	465,249	5,735
Due from other governments	3,525,434	-	3,525,434	-
Inventories	744,644	-	744,644	-
Prepaid items and deposits	71,866	22,166	94,032	15,377
Total current assets	26,112,812	3,956,917	30,069,729	12,499,168
Noncurrent assets:				
Capital assets, net	59,036,668	1,223,123	60,259,791	-
Total noncurrent assets	59,036,668	1,223,123	60,259,791	-
Total assets	85,149,480	5,180,040	90,329,520	12,499,168
DEFERRED OUTFLOWS OF RESOURCES				
Deferred outflows of resources related to pensions	7,026,121	429,295	7,455,416	-
Deferred outflows of resources related to other postemployment benefits	2,510,479	85,736	2,596,215	-
Total deferred outflows of resources	9,536,600	515,031	10,051,631	-

(Continued)

See accompanying Notes to the Basic Financial Statements.

City of Gardena
Statement of Net Position (Continued)
Proprietary Funds
June 30, 2023

	Business-Type Activities			Governmental Activities
	GTrans Enterprise Fund	Nonmajor Sewer Enterprise Fund	Total	Internal Service Funds
LIABILITIES				
Current liabilities:				
Accounts payable	1,183,962	6,196	1,190,158	95,960
Accrued liabilities	109,128	1,020	110,148	313,090
Salaries and benefits payable	229,701	14,521	244,222	-
Due to other funds	7,093,382	-	7,093,382	-
Unearned revenue	17,386,473	-	17,386,473	-
Compensated absences, due within one year	360,173	24,108	384,281	-
Lease payable, due within one year	13,353	-	13,353	-
Subscription payable, due within one year	100,280	24,997	125,277	-
Long-term debt, due within one year	883,679	41,258	924,937	-
Claims payable, due within one year	-	-	-	4,811,358
Total current liabilities	27,360,131	112,100	27,472,231	5,220,408
Noncurrent liabilities:				
Compensated absences, due in more than one year	1,440,692	96,431	1,537,123	-
Claims payable, due in more than one year	-	-	-	13,529,000
Long-term debt, due in more than one year	19,109,460	906,967	20,016,427	-
Aggregate net pension liability	3,046,867	186,163	3,233,030	-
Aggregate net other postemployment benefits liabilities	7,726,172	294,726	8,020,898	-
Total noncurrent liabilities	31,323,191	1,484,287	32,807,478	13,529,000
Total liabilities	58,683,322	1,596,387	60,279,709	18,749,408
DEFERRED INFLOWS OF RESOURCES				
Deferred inflows of resources related to pensions	1,800,304	109,999	1,910,303	-
Deferred inflows of resources related to other postemployment benefits	739,416	286,045	1,025,461	-
Total deferred inflows of resources	2,539,720	396,044	2,935,764	-
NET POSITION				
Net investment in capital assets	57,966,058	1,172,140	59,138,198	-
Unrestricted (deficit)	(24,503,020)	2,530,500	(21,972,520)	(6,250,240)
Total net position	$ 33,463,038	$ 3,702,640	$ 37,165,678	$ (6,250,240)
Net position reconciliation:				
Net position of proprietary funds	$ 33,463,038	$ 3,702,640	$ 37,165,678	$ (6,250,240)
Adjustment to reflect the consolidation of internal service fund activities related to the GTrans and Sewer	(10,687,412)	16,967	(10,670,445)	10,670,445
Net position of business-type activities	$ 22,775,626	$ 3,719,607	$ 26,495,233	
Net position related to governmental activities				$ 4,420,205

(Concluded)

See accompanying Notes to the Basic Financial Statements.

City of Gardena

Annual Comprehensive Financial Report
For the Year Ended June 30, 2023

(This page is intentionally left blank)

City of Gardena
Statement of Revenues, Expenses, and Changes in Net Position
Proprietary Funds
For the Year Ended June 30, 2023

	Business-Type Activities			Governmental Activities
	GTrans Enterprise Fund	Nonmajor Sewer Enterprise Fund	Total	Internal Service Funds
OPERATING REVENUES:				
Charges for services	$ 1,571,058	$ 2,473,501	$ 4,044,559	$ 13,692,956
Other	195,866	-	195,866	1,502,247
Total operating revenues	1,766,924	2,473,501	4,240,425	15,195,203
OPERATING EXPENSES:				
Salaries and benefits	15,950,503	873,242	16,823,745	-
Insurance claims	-	-	-	8,670,952
General and administrative	6,223,928	324,541	6,548,469	6,755,223
Depreciation and amortization	3,504,186	160,952	3,665,138	-
Other operating expenses	2,305,674	79,075	2,384,749	243,140
Total operating expenses	27,984,291	1,437,810	29,422,101	15,669,315
OPERATING INCOME (LOSS)	(26,217,367)	1,035,691	(25,181,676)	(474,112)
NONOPERATING REVENUES (EXPENSES):				
Local transportation fund	7,023,418	-	7,023,418	-
Other local assistance	10,192,921	-	10,192,921	-
Federal transit assistance	4,100,000	-	4,100,000	-
State transit assistance fund	1,428,103	-	1,428,103	-
Interest income	361,480	76,288	437,768	186,786
Interest expense	(622,323)	(29,822)	(652,145)	-
Gain on sale of capital assets	26,656	-	26,656	-
Total nonoperating revenues (expenses)	22,510,255	46,466	22,556,721	186,786
INCOME (LOSS) BEFORE CONTRIBUTIONS AND TRANSFERS	(3,707,112)	1,082,157	(2,624,955)	(287,326)
CONTRIBUTIONS AND TRANSFERS:				
Capital contributions	3,186,920	-	3,186,920	-
Transfers in	-	49,281	49,281	2,986,852
Transfers out	(1,967)	(563,168)	(565,135)	(1,642,368)
Total contributions and transfers	3,184,953	(513,887)	2,671,066	1,344,484
CHANGES IN NET POSITION	(522,159)	568,270	46,111	1,057,158
NET POSITION (DEFICIT):				
Beginning of year	33,985,197	3,134,370	37,119,567	(7,307,398)
End of year	$ 33,463,038	$ 3,702,640	$ 37,165,678	$ (6,250,240)
Change in net position reconciliation:				
Change in net position of proprietary funds	$ (522,159)	$ 568,270	$ 46,111	$ 1,057,158
Adjustment to reflect the consolidation of internal service fund activities related to the GTrans and Sewer	(36,762)	1,025	(35,737)	35,737
Change in net position of business-type activities	$ (558,921)	$ 569,295	$ 10,374	
Change in net position related to governmental activities				$ 1,092,895

See accompanying Notes to the Basic Financial Statements.

City of Gardena
Statement of Cash Flows
Proprietary Funds
For the Year Ended June 30, 2023

	Business-Type Activities			Governmental Activities
	GTrans Enterprise Fund	Nonmajor Sewer Enterprise Fund	Total	Internal Service Funds
CASH FLOWS FROM OPERATING ACTIVITIES:				
Receipts from customers and users	$ 1,647,206	$ 2,472,412	$ 4,119,618	$ 13,892,956
Receipts from claims and recoveries	-	-	-	1,502,247
Payments for insurance claims	-	-	-	(7,134,219)
Payments to suppliers	(8,633,791)	(415,897)	(9,049,688)	(7,499,435)
Payments to employees	(16,188,619)	(940,504)	(17,129,123)	-
Other receipts	195,866	-	195,866	
Net cash provided by (used in) operating activities	(22,979,338)	1,116,011	(21,863,327)	761,549
CASH FLOWS FROM NONCAPITAL FINANCING ACTIVITIES:				
Transfers from other funds	-	49,281	49,281	2,986,852
Transfers to other funds	(1,967)	(563,168)	(565,135)	(1,642,368)
Payments received from other funds	5,301,595	-	5,301,595	-
Principal payments on long term debt	(1,043,788)	(61,898)	(1,105,686)	-
Interest paid	(622,323)	(29,822)	(652,145)	-
Transit assistance funds received	25,139,677	-	25,139,677	-
Net cash provided by (used in) noncapital financing activities	28,773,194	(605,607)	28,167,587	1,344,484
CASH FLOWS FROM CAPITAL AND RELATED FINANCING ACTIVITIES:				
Acquisition of capital assets	(3,186,920)	(443,177)	(3,630,097)	-
Proceeds from sale of capital assets	26,656	-	26,656	-
Receipt from capital grants	3,186,920	-	3,186,920	-
Net cash provided by (used in) capital and related financing activities	26,656	(443,177)	(416,521)	-
CASH FLOWS FROM INVESTING ACTIVITIES:				
Interest received	361,480	76,288	437,768	186,786
Net cash provided by investing activities	361,480	76,288	437,768	186,786
Net change in cash and cash equivalents	6,181,992	143,515	6,325,507	2,292,819
CASH AND CASH EQUIVALENTS:				
Beginning of year	15,340,334	3,574,529	18,914,863	10,185,237
End of year	$ 21,522,326	$ 3,718,044	$ 25,240,370	$ 12,478,056

(Continued)

See accompanying Notes to the Basic Financial Statements.

City of Gardena
Statement of Cash Flows (Continued)
Proprietary Funds
For the Year Ended June 30, 2023

	Business-Type Activities			Governmental Activities
	GTrans Enterprise Fund	Nonmajor Sewer Enterprise Fund	Total	Internal Service Funds
RECONCILIATION OF OPERATING INCOME (LOSS) TO NET CASH PROVIDED BY (USED IN) OPERATING ACTIVITIES:				
Operating income (loss)	$ (26,217,367)	$ 1,035,691	$ (25,181,676)	$ (474,112)
Adjustments to reconcile operating income (loss) to net cash provided by (used in) operating activities:				
Depreciation and amortization expenses	3,504,186	160,952	3,665,138	-
(Increase) decrease in:				
Accounts receivable	76,148	(1,089)	75,059	200,000
Inventory	81,743	-	81,743	-
Prepaid items and deposits	(19,848)	(7,439)	(27,287)	(8,873)
Deferred outflows of resources - pensions	(5,799,993)	(362,056)	(6,162,049)	-
Deferred outflows of resources - OPEB	(1,396,023)	(1,457)	(1,397,480)	-
Increase (decrease) in:				
Accounts payable	(106,353)	(5,862)	(112,215)	(156,828)
Accrued liabilities	(59,731)	1,020	(58,711)	(319,676)
Accrued payroll	(459,134)	(21,469)	(480,603)	-
Compensated absences	18,091	(54,111)	(36,020)	-
Net pension liability	13,202,012	743,055	13,945,067	-
Net other postemployment benefits liability	1,813,748	(241,372)	1,572,376	-
Deferred inflows of resources - OPEB	(330,593)	258,440	(72,153)	-
Deferred inflows of resources - pensions	(7,286,224)	(388,292)	(7,674,516)	-
Deposits payable	-	-	-	(15,695)
Claims payable	-	-	-	1,536,733
Total adjustment	3,238,029	80,320	3,318,349	1,235,661
Net cash provided by (used in) operating activities	$ (22,979,338)	$ 1,116,011	$ (21,863,327)	$ 761,549

(Concluded)

See accompanying Notes to the Basic Financial Statements.

City of Gardena

Annual Comprehensive Financial Report
For the Year Ended June 30, 2023

(This page is intentionally left blank)

NOTES TO THE BASIC FINANCIAL STATEMENTS

City of Gardena

Annual Comprehensive Financial Report
For the Year Ended June 30, 2023

(***This page is intentionally left blank)***

City of Gardena
Index to the Notes to the Basic Financial Statements
For the Year Ended June 30, 2023

Note 1 – Summary of Significant Accounting Policies 47

A. Financial Reporting Entity 47
B. Basis of Accounting and Measurement Focus 47
C. Cash, Cash Equivalents and Investments 50
D. Cash and Investments with Fiscal Agents 50
E. Fair Value Measurement 50
F. Interfund Transactions 50
G. Inventories and Prepaid Items 51
H. Capital Assets 51
I. Deferred Outflows and Inflows of Resources 52
J. Interest Payable 52
K. Unearned Revenue 52
L. Compensated Absences 52
M. Leases 52
N. Pensions 53
O. Other Postemployment Benefits ("OPEB") 54
P. Claims Payable 54
Q. Subscription Based Information Technology Arrangements Liabilities 54
R. Long-Term Debt 55
S. Property Taxes 55
T. Net Position and Fund Balances 56
U. Use of Estimates 57
V. Implementation of New GASB Pronouncements 57

Note 2 – Stewardship, Compliance and Accountability 58

A. Deficit Net Position 58
B. Expenditures in Excess of Appropriations 58

Note 3 – Cash and Investments 59

A. Deposits 60
B. Investments 61
C. Fair Value Measurement 62
D. Risk Disclosures 62

Note 4 – Other Receivables 63

A. YMCA Receivables 63
B. State Mandated Claims Reimbursement 63

Note 5 – Loans Receivable 64

A. Home-Owner Occupied Deferred Loans 64
B. Spring Park Senior Villa Developer Loan 64

Note 6 – Interfund Transactions 64

A. Government-Wide Financial Statements 64
B. Fund Financial Statements 65

City of Gardena
Index to the Notes to the Basic Financial Statements (Continued)
For the Year Ended June 30, 2023

Note 7 – Capital Assets 67

A. Governmental Activities 67
B. Business-Type Activities 68

Note 8 – Long-Term Liabilities 69

A. Governmental Activities 69
B. Business-Type Activities 75

Note 9 – Self-Insurance Programs 77

A. Self-Insurance Programs of the City 77
B. Purchased Insurance 77
C. Adequacy of Protection 77

Note 10 – Retirement Plans 78

A. California Public Employee's Retirement System ("CalPERS") 78
B. Public Agency Retirement System ("PARS") 87

Note 11 – Other Postemployment Benefits ("OPEB") 87

Note 12 – Deferred Compensation Plan 95

Note 13 – Net Position and Fund Balances 95

A. Government-Wide Financial Statements 95
B. Fund Financial Statements 96

Note 14 – Jointly Governed Organization 97

Note 15 – Commitments and Contingencies 97

Note 1 – Summary of Significant Accounting Policies

The basic financial statements of the City of Gardena, California, (the "City") have been prepared in accordance with accounting principles generally accepted in the United States of America ("U.S. GAAP") as applied to governmental agencies. The Governmental Accounting Standards Board ("GASB") is the accepted standard setting body for establishing governmental accounting and financial reporting principles. The following is a summary of the significant policies:

A. Financial Reporting Entity

The City was incorporated September 11, 1930, under the General Laws of the State of California. The City is governed by an elected five-member council.

Blended Component Unit

In evaluating how to define the City for financial reporting purposes, management has considered all potential component units. The primary criteria for including a potential component unit within the reporting entity are the governing body's financial accountability and a financial benefit or burden relationship and whether it is misleading to exclude. A primary government is financially accountable and shares a financial benefit or burden relationship, if it appoints a voting majority of an organization's governing body and it is able to impose its will on the organization, or if there is a potential for the organization to provide specific financial benefits to, or impose specific financial burdens on the primary government. A primary government may also be financially accountable if an organization is fiscally dependent on the primary government regardless of whether the organization has a separately elected governing board, a governing board appointed by a higher level of government, or a jointly appointed board, and there is a potential for the organization to provide specific financial benefits to, or impose specific financial burdens on the primary government.

Management determined that the following component unit should be blended based on the criteria above:

Although the following is legally separate from the City, it has been "blended" as though it is part of the City because the component unit's governing body is substantially the same as the City's and there is a financial benefit or burden relationship between the City and the component unit; management of the City has operational responsibilities for the component unit; and/or the component unit provides services entirely, or almost entirely, to the City or otherwise exclusively, or almost exclusively, benefits the City, even though it does not provide services directly to it.

City of Gardena Financing Agency - The City of Gardena Financing Agency ("the Agency") was created primarily to finance the acquisition of a public parking structure. The members of the City Council serve as the governing board of the Agency and there is a financial benefit or burden relationship between the City and the Agency. The Agency does not issue separate financial statements.

The City had no discretely presented component units.

B. Basis of Accounting and Measurement Focus

The accounts of the City are organized on the basis of funds, each of which is considered a separate accounting entity. The operations of each fund are accounted for by providing a separate set of self-balancing accounts that comprise its assets, liabilities, fund equity, revenues and expenditures or expenses, as appropriate. City resources are allocated to and accounted for in individual funds based upon the purposes for which they are to be spent and the means by which spending activities are controlled.

Note 1 – Summary of Significant Accounting Policies (Continued)

B. Basis of Accounting and Measurement Focus (Continued)

Government-Wide Financial Statements

The Government-Wide Financial Statements are presented on an *"economic resources"* measurement focus and the accrual basis of accounting. Accordingly, all of the City's assets, deferred outflows of resources, liabilities, and deferred inflows of resources, including capital assets, as well as infrastructure assets, and long-term liabilities, are included in the accompanying Statement of Net Position. The Statement of Activities presents changes in net position. Under the accrual basis of accounting, revenues are recognized in the period in which they are earned while expenses are recognized in the period in which the liability is incurred. Fiduciary activities are not included in these statements.

Certain types of transactions are reported as program revenues for the City in three categories:

- Charges for services
- Operating grants and contributions
- Capital grants and contributions

Certain eliminations have been made in regards to interfund activities, payables and receivables. All internal balances in the Statement of Net Position have been eliminated except those representing balances between the governmental activities and the business-type activities, which are presented as internal balances and eliminated in the total primary government column. In the Statement of Activities, internal service fund transactions have been eliminated; however, those transactions between governmental and business-type activities have not been eliminated. The following interfund activities have been eliminated:

- Due from and to other funds
- Transfers in and out

Governmental Fund Financial Statements

All governmental funds are accounted for on a spending or *"current financial resources"* measurement focus and the modified accrual basis of accounting. Accordingly, only current assets and current liabilities are included on the Balance Sheet. The Statement of Revenues, Expenditures and Changes in Fund Balances present increases (revenues and other financing sources) and decreases (expenditures and other financing uses) in fund balances. Under the modified accrual basis of accounting, revenues are recognized in the accounting period in which they become both measurable and available to finance expenditures of the current period.

Revenues are recognized as soon as they are both "*measurable*" and "*available*". Revenues are considered to be available when they are collectible within the current period or soon enough thereafter to pay liabilities of the current period. For these purposes, the City considers revenues to be available if they are collected within 60 days of the end of the current fiscal period. The primary revenue sources, which have been treated as susceptible to accrual by the City, are property taxes, other local taxes, franchise fees, forfeitures and penalties, motor license fees, rents and concessions, interest revenue, and state and federal grants and subventions. Expenditures are recorded in the accounting period in which the related fund liability is incurred.

Reconciliations of the fund financial statements to the Government-Wide Financial Statements are provided to explain the differences.

Certain indirect costs are included as part of the program expenses reported for individual functions and activities.

Note 1 – Summary of Significant Accounting Policies (Continued)

B. Basis of Accounting and Measurement Focus (Continued)

Governmental Fund Financial Statements (Continued)

The City reports the following major governmental funds:

- General Fund - The General Fund is used to account for and report all financial resources not accounted for and reported in another fund.

- Economic Development Grants Special Revenue Fund - The Economic Development Grants Special Revenue Fund is used to account for and report of housing, environmental activities, and land use improvement, including funding received from the U.S. Department of Housing and Urban Development (HUD), the U.S. Environmental Protection Agency, and California Department of Housing & Community Development (HCD) and to account for fees received from developers to fund park and recreation facilities.

- City Capital Projects Fund - Represents the financial resources that are restricted, committed or assigned to expenditures for capital outlay.

- City Debt Service Fund - The City Debt Service Fund is used to account for and report financial resources that are restricted, committed or assigned to expenditure for principal and interest.

Proprietary Fund Financial Statements

Proprietary funds are accounted for using the "*economic resources*" measurement focus and the accrual basis of accounting. Accordingly, all assets and liabilities (whether current or noncurrent) are included on the Statement of Net Position. The Statement of Revenues, Expenses and Changes in Net Position presents increases (revenues) and decreases (expenses) in total net position. Under the accrual basis of accounting, revenues are recognized in the period in which they are earned while expenses are recognized in the period in which the liability is incurred.

Proprietary funds distinguish operating revenues and expenses from nonoperating items. Operating revenues and expenses generally result from providing services and producing and delivering goods in connection with a proprietary fund's principal ongoing operations. The principal operating revenues of the proprietary funds are charges to customers for sales and services. Operating expenses for the proprietary funds include the costs of sales and services, administrative expenses and depreciation on capital assets. All revenues and expenses not meeting this definition are reported as nonoperating revenues and expenses.

A separate column representing internal service funds is also presented in these statements. However, internal service balances and activities have been combined with the governmental activities and business-type activities in the Government-Wide Financial Statements. The City's internal service funds include three individual funds which provide services directly to other City funds. These areas of service include general liability, workers' compensation, and health benefits.

The City reports the following proprietary funds:

- GTrans Enterprise Fund - The GTrans Fund accounts for user charges, fees, federal, state and county grants and all operating costs associated with the operation of the City's bus line.

Note 1 – Summary of Significant Accounting Policies (Continued)

B. Basis of Accounting and Measurement Focus (Continued)

Proprietary Fund Financial Statements (Continued)

- Sewer Enterprise Fund (Nonmajor) - The Sewer Fund accounts for user charges, fees and all operating costs associated with the operation, maintenance, upgrade and periodic reconstruction of the City's sanitary sewer system.
- Internal Service Funds – The Internal Service Funds account for financing of goods and services provided by one department (general liability, workers' compensation, and health benefits) to other departments of the City on a cost-reimbursement basis.

The City considers the GTrans Enterprise Fund to be a major fund for the year ended June 30, 2023.

C. Cash, Cash Equivalents, and Investments

The City's cash and cash equivalents are considered to be cash on hand, demand deposits, and short-term investments with original maturity of three months or less from the date of acquisition. All cash and investments of proprietary funds are held in the City's investment pool. These cash pools have the general characteristics of a demand deposit account, therefore, all cash and investments in the proprietary funds are considered cash and cash equivalents for Statement of Cash Flows purposes.

Investments are stated at fair value.

D. Cash and Investments with Fiscal Agents

Cash and investments with fiscal agents are restricted for the redemption of bonded debt and for acquisition and construction of capital projects.

E. Fair Value Measurement

U.S. GAAP defines fair value, establishes a framework for measuring fair value and establishes disclosure about fair value measurement. Investments, unless otherwise specified at fair value in the financial statements, are categorized based upon the level of judgment associated with the inputs used to measure their fair value. Levels of inputs are as follows:

- Level 1 – Inputs are unadjusted, quoted prices for identical assets or liabilities in active markets at the measurement date.
- Level 2 – Inputs, other than quoted prices included in Level 1, that are observable for the assets or liabilities through corroboration with market data at the measurement date.
- Level 3 – Unobservable inputs that reflect management's best estimate of what market participants would use in pricing the assets or liabilities at the measurement date.

F. Interfund Transactions

Activity between funds that are representative of lending/borrowing arrangements outstanding at the end of the fiscal year are referred to as "due from/to other funds" (i.e., current portion of interfund loans). Any residual balances outstanding between the governmental activities and business-type activities are reported in the Government-Wide Financial Statements as "internal balances".

Note 1 – Summary of Significant Accounting Policies (Continued)

G. Inventories and Prepaid Items

Inventories within the various fund types consist of materials and supplies which are valued at cost on a first-in, first-out basis. Reported expenditures reflect the consumption method of recognizing inventory-related expenditures.

Certain payments to vendors reflect costs applicable to future accounting periods and are recorded as prepaid items in both the government-wide and fund financial statements by using purchase method.

A nonspendable fund balance has been reported in the governmental funds to show that inventories and prepaid items do not constitute "available spendable resources," even though they are a component of current assets.

H. Capital Assets

In the Government-Wide Financial Statements, capital assets are recorded at cost where historical records are available and at an estimated original cost where no historical records exist. Donated capital assets are valued at their acquisition value. City policy has set the capitalization threshold for reporting capital assets at $5,000.

The City defines infrastructure assets as the basic physical assets that allow the City to function. The assets include streets, bridges, sidewalks, drainage systems, and lighting systems, etc. Each major infrastructure system can be divided into subsystems. For example, the street system can be subdivided into pavement, curb and gutters, sidewalks, medians, streetlights, landscaping and land. These subsystems were not delineated in the basic financial statements. The appropriate operating department maintains information regarding the subsystems.

Major outlays for capital assets and improvements are capitalized as projects are constructed. Capital assets acquired under capital lease are capitalized at the net present value of the total lease payments.

For all infrastructure systems, the City elected to use the "Basic Approach".

The intangible right-to-use asset includes lease assets or subscription-based information technology arrangements ("SBITA") assets ("subscription asset"). These intangible assets are recorded at the amount of the initial measurement of the lease liabilities or SBITA liabilities ("subscription liabilities") and adjusted by any lease made to the lessor or subscription payments to the SBITA vendor at or before the commencement of the lease or subscription term, less any incentives received from the lessor or SBITA vendor at or before the commencement of the lease or subscription term along with any initial direct costs that are ancillary charges necessary to place the lease assets into service or subscription implementation costs. Lease assets are amortized using the straight-line method over the shorter of the lease term or the useful life of the underlying asset, unless the lease contains a purchase option that the City has determined is reasonably certain of being exercised. In this case, the lease asset is amortized over the useful life of the underlying asset. Subscription assets are amortized over the shorter of the subscription term or the useful life of the underlying Information Technology assets.

Capital assets used in operations are depreciated over their estimated useful lives using the straight-line method. The lives used for depreciation purposes are as follows:

Buildings/structures and improvements	40 years
Machinery and equipment	3-15 years
Buses	12 years
Furniture and fixtures	3-10 years
Infrastructure	30-60 years

Note 1 – Summary of Significant Accounting Policies (Continued)

I. Deferred Outflows and Inflows of Resources

The statement of net position and balance sheet – governmental funds reports separate sections for deferred outflows of resources and deferred inflows of resources, when applicable.

Deferred Outflows of Resources represent a consumption of net assets that applies to future periods.

Deferred Inflows of Resources represent an acquisition of net assets that applies to future periods.

J. Interest Payable

In the Government-wide Financial Statements, interest payable on long-term debt is recognized as the liability incurred for governmental activities and business-type activities.

In the Fund Financial Statements, only proprietary fund types recognize the interest payable when the liability is incurred.

K. Unearned Revenue

Unearned revenue is recognized for transactions for which revenue has not yet been earned. Typical transactions recorded as unearned revenues are prepaid charges for services and grants received but not yet earned.

L. Compensated Absences

It is the City's policy to accrue annual leave when incurred in the Government-wide Financial Statements and the proprietary funds. In governmental funds, the costs for annual leave that are expected to be liquidated with expendable available financial resources are reported as an expenditure and reported as a liability of the governmental fund only if they have matured.

A liability is recorded for unused sick leave balances only to the extent that it is probable that the unused balances will result in termination payments. This is estimated by including in the liability the unused balances of employees currently entitled to receive termination benefits, as well as those who are expected to become eligible to receive termination benefits as a result of continuing their employment with the City. Other amounts of unused sick leave are excluded from the liability since their payment is contingent solely upon the occurrence of a future event (illness) which is outside the control of the City and the employee.

M. Leases

The City has a policy to recognize a lease liability and a right-to-use asset (lease asset) in the financial statements with an initial, individual value of $5,000 or more with a lease term greater than one year. Variable payments based on future performance or usage of the underlying assets are not included in the measurement of the lease liability.

At the commencement of a lease, the lease liability is measured at the present value of payments expected to be made during the lease term. Subsequently, the lease liability is reduced by the principal portion of lease payments made.

Note 1 – Summary of Significant Accounting Policies (Continued)

M. Leases (Continued)

Lease assets are recorded at the amount of the initial measurement of the lease liabilities and modified by any lease payments made to the lessor at or before the commencement of the lease term, less any lease incentives received from the lessor at or before the commencement of the lease term along with any initial direct costs that are ancillary charges necessary to place the lease assets into service. Lease assets are amortized using the straight–line method over the shorter of the lease term or the useful life of the underlying asset, unless the lease contains a purchase option that the State has determined is reasonably certain of being exercised. In this case, the lease asset is amortized over the useful life of the underlying asset.

Key estimates and judgments related to leases include how the City determines (1) the discount rate it uses to discount the expected lease payments to present value, (2) lease term, and (3) lease payments.

- The City uses the interest rate charged by the lessor as the discount rate. When the interest rate charged by the lessor is not provided, the City generally uses its estimated incremental borrowing rate as the discount rate for leases.
- The lease term includes the noncancelable period of the lease, plus any option periods that are reasonably certain to be exercised.
- Lease payments included in the measurement of the lease liability are composed of fixed payments and purchase option price that the City is reasonably certain to exercise. The City monitors changes in circumstances that would require a remeasurement of a lease and will remeasure any lease asset and liability if certain changes occur that are expected to significantly affect the amount of the lease liability.

Lease assets are reported as right-to-use along with other capital assets and lease liabilities are reported on the statement of net position.

N. Pensions

For purposes of measuring the net pension liability, deferred outflows of resources and deferred inflows of resources related to pensions, and pension expense, information about the fiduciary net position of the plans and additions to/deductions from the plans' fiduciary net position have been determined on the same basis as they are reported by the plans. For this purpose, benefit payments (including refunds of employee contributions) are recognized when due and payable in accordance with benefit terms. Investments are reported at fair value.

The following timeframes are used for pension reporting:

Valuation Date	June 30, 2021
Measurement Date	June 30, 2022
Measurement Period	July 1, 2021 to June 30, 2022

Gains and losses related to changes in total pension liability and fiduciary net position are recognized in pension expense systematically over time. The first amortized amounts are recognized in pension expense for the year the gain or loss occurs. The remaining amounts are categorized as deferred outflows and deferred inflows of resources related to pensions and are to be recognized in future pension expense. The amortization period differs depending on the source of the gain or loss. The difference between projected and actual earnings is amortized straight-line over 5 years. All other amounts are amortized straight-line over the average expected remaining service lives of all members that are provided with benefits (active, inactive, and retired) as of the beginning of the measurement period.

Note 1 – Summary of Significant Accounting Policies (Continued)

O. Other Postemployment Benefits ("OPEB")

For the purpose of measuring the net OPEB liability, deferred outflows of resources and deferred inflows of resources related to OPEB, and OPEB expense, information about the fiduciary net position of the City's OPEB Plan and additions to/deductions from the OPEB Plan's fiduciary net position have been determined on the same basis as they are reported by the Plan. For this purpose, the OPEB Plan recognizes benefit payments when due and payable in accordance with the benefit terms. Investments are reported at fair value, except for money market investments, which are reported at amortized cost.

The following timeframes are reported OPEB reporting:

OPEB	
Valuation Date	June 30, 2022
Measurement Date	June 30, 2022
Measurement Period	July 1, 2021 to June 30, 2022

Gains and losses related to changes in total OPEB liability and fiduciary net position are recognized in OPEB expense systematically over time. The first amortized amounts are recognized in OPEB expense for the year the gain or loss occurs. The remaining amounts are categorized as deferred outflows and deferred inflows of resources related to OPEB and are to be recognized in future OPEB expense. The amortization period differs depending on the sources of gain or loss. The difference between projected and actual earnings is amortized on a straight-line basis over 5 years. All other amounts are amortized on a straight-line basis over the average expected remaining service lives of all members that are provided with benefits (active, inactive, and retired) at the beginning of the measurement period.

P. Claims Payable

Claims payable in the Internal Service Fund represents estimates of claims against the City. The estimated claims payable represents the City's best estimate of the amount to be paid on workers' compensation and general liability claims. Losses for claims incurred but not reported are also recorded if the probable amount of loss can be reasonably estimated. The City is self-insured for general liability in the amount of $750,000 per claim and $250,000 per claim for GTrans. In addition, City also self-insured for workers' compensation for $750,000 per claim for both the City and GTrans. Losses in excess of $750,000 for the City and $250,000 for GTrans, up to $25,000,000 for general liability, and in excess of $750,000 for both the City and GTrans, up to the statutory limit for workers' compensation, are covered by outside insurance.

Q. Subscription Based Information Technology Arrangements Liabilities

The City recognizes subscription liabilities with an initial, individual value of $5,000 or more with a subscription term greater than one year in the government-wide and proprietary fund financial statements. Variable payments based on future performance of the City, usage of the underlying IT assets, or number of user seats are not included in the measurement of the subscription liability.

At the commencement of a subscription, the City initially measures the subscription liability at the present value of subscription payments expected to be made during the subscription term. Subsequently, the lease liability is reduced by the principal portion of subscription payments made.

Note 1 – Summary of Significant Accounting Policies (Continued)

Q. Subscription Based Information Technology Arrangements Liabilities (Continued)

Key estimates and judgments related to subscription liabilities include how the City determines (1) the discount rate it uses to discount the expected subscription payments to present value, (2) subscription term, and (3) subscription payments.

- The City uses the interest rate charged by the SBITA vendor as the discount rate. When the interest rate charged by the lessor is not provided, the City generally uses its estimated incremental borrowing rate as the discount rate for subscription liabilities.

- The subscription term includes the noncancellable period of the SBITA. Subscription payments included in the measurement of the subscription liability are composed of fixed payments.

The City monitors changes in circumstances that would require a remeasurement of its SBITA and will remeasure any subscription asset or liability if certain changes occur that are expected to significantly affect the amount of the subscription liability.

R. Long-Term Debt

In the Government-Wide Financial Statements and Proprietary Fund Financial Statements, long-term debt and other long-term obligations are reported as liabilities in the appropriate activities. Bond premium and discounts are deferred and amortized over the life of the bonds using the effective interest method. Bonds payable are reported net of the applicable bond premium or discount. Bond issuance costs are expensed when incurred.

The governmental fund financial statements do not present long-term liabilities. Consequently, long-term debt is shown as a reconciling item in the Reconciliation of the Governmental Funds Balance Sheet to the Government-Wide Statement of Net Position.

S. Property Taxes

Under California law, property taxes are assessed and collected by the counties for up to 1% of assessed property value, plus other increases approved by the voters. Property taxes collected are pooled and then allocated to the cities based on complex formulas. The following are key dates pertaining to property taxes:

January 1	Lien Date
June 30	Levy Date
November 1 and February 1	Due Dates
December 10 and April 10	Collection Dates

Distribution Dates:

November 18, 2022	Unsecured, redemptions, and SB813 taxes
December 20, 2022	Homeowners' exemption, secured, and SB813 taxes
January 20, 2023	Homeowners' exemption, secured, and SB813 taxes
February 17, 2023	Redemptions, secured, and SB813 taxes
March 18, 2023	Secured and SB813 taxes
April 20, 2023	Secured and SB813 taxes
May 19, 2023	Redemptions, homeowners' exemption, secured, and SB813 taxes
June 20, 2023	Homeowners' exemption, SB813 taxes
July 20, 2023	Secured and SB813 taxes
August 20, 2023	Secured, redemptions, unsecured, and SB813 taxes

Note 1 – Summary of Significant Accounting Policies (Continued)

T. Net Position and Fund Balances

In the Government-Wide Financial Statements and proprietary fund financial statements, net position is classified as follows:

Net Investment in Capital Assets – This component of net position consists of capital assets, net of accumulated depreciation and amortization, reduced by the outstanding balances of retention payable and debt that are attributable to the acquisition, construction, or improvement of those assets.

Restricted – This component of net position consists of restricted assets reduced by liabilities and deferred outflows and inflows of resources related to those assets.

Unrestricted – This component of net position is the amount of the assets, deferred outflows of resources, liabilities, and deferred inflows of resources that are not included in the determination of net investment in capital assets or the restricted component of net position.

In the Governmental Fund Financial Statements, fund balances are classified as follows:

Nonspendable – Nonspendable fund balances are items that cannot be spent because they are not in spendable form, such as prepaid items and inventories, or items that are legally or contractually required to be maintained intact, such as principal of an endowment or revolving loan funds.

Restricted – Restricted fund balances encompass the portion of net fund resources subject to externally enforceable legal restrictions. This includes externally imposed restrictions by creditors, such as through debt covenants, grantors, contributors, laws or regulations of other governments, as well as restrictions imposed by law through constitutional provisions or enabling legislation.

Committed – Committed fund balances encompass the portion of net fund resources, the use of which is constrained by limitations that the government imposes upon itself at its highest level of decision making, normally the governing body, and that remain binding unless removed in the same manner. The City Council is considered the highest authority for the City. Adoption of a resolution by the City Council is required to commit resources or to rescind the commitment.

Assigned – Assigned fund balances encompass the portion of net fund resources reflecting the government's intended use of resources. Assignment of resources can be done by the highest level of decision making or by a committee or official designated for that purpose. The City Council has authorized by resolution the City Manager or the City Fiscal Officer for that purpose.

Unassigned – This amount is for any portion of the fund balances that do not fall into one of the above categories. The General Fund is the only fund that reports a positive unassigned fund balance amount. In other governmental funds, it is not appropriate to report a positive unassigned fund balance amount. However, in governmental funds other than General Fund, if expenditures incurred for specific purposes exceed the amounts that are restricted, committed or assigned to those purposes, it may be necessary to report a negative unassigned fund balance in that fund.

Spending Policy

Government-Wide Financial Statements and the Proprietary Fund Financial Statements

When expenses are incurred for purposes for which both restricted and unrestricted components of net position are available, the City's policy is to apply the restricted component of net position first, then the unrestricted component of net position as needed.

Note 1 – Summary of Significant Accounting Policies (Continued)

T. Net Position and Fund Balances (Continued)

Spending Policy (Continued)

Governmental Fund Financial Statements

When expenditures are incurred for purposes for which all restricted, committed, assigned and unassigned fund balances are available, the City's policy is to apply in the following order, except for instances wherein an ordinance specifies the fund balance:

- Restricted
- Committed
- Assigned
- Unassigned

U. Use of Estimates

The preparation of the basic financial statements in conformity with U.S. GAAP requires management to make estimates and assumptions that affect certain reported amounts and disclosures. Accordingly, actual results could differ from those estimates.

V. Implementation of New GASB Pronouncements

In May 2019, GASB issued Statement No. 91, *Conduit Debt Obligations*, to provide a single method of reporting conduit debt obligations by issuers and eliminate diversity in practice associated with (1) commitments extended by issuers, (2) arrangements associated with conduit debt obligations, and (3) related note disclosures. This Statement achieves those objectives by clarifying the existing definition of a conduit debt obligation; establishing that a conduit debt obligation is not a liability of the issuer; establishing standards for accounting and financial reporting of additional commitments and voluntary commitments extended by issuers and arrangements associated with conduit debt obligations; and improving required note disclosures. Implementation of this Statement did not have a significant effect to the City's financial statements for the fiscal year ended June 30, 2023.

In March 2020, GASB issued Statement No. 94, *Public-Private and Public-Public Partnerships and Availability Payment Arrangements* (GASB Statement No. 94), to improve financial reporting by addressing issues related to public-private and public-public partnership arrangements (PPPs). Implementation of this Statement did not have a significant effect to the City's financial statements for the fiscal year ended June 30, 2023.

In May 2020, GASB issued Statement No. 96, *Subscription-Based Information Technology Arrangements* (GASB Statement No. 96), to better meet the information needs of financial statement users by (a) establishing uniform accounting and financial reporting requirements for SBITAs; (b) improving the comparability of financial statements among governments that have entered into SBITAs; and (c) enhancing the understandability, reliability, relevance, and consistency of information about SBITAs. Under this Statement, a government is required to recognize a subscription liability and an intangible right-to-use subscription asset. The effective date of GASB Statement No. 96 is for fiscal years beginning after June 15, 2022. Implementation of this Statement resulted in restatement of beginning balance of capital assets (Note 7) and long-term debt liabilities (Note 8) at July 1, 2022.

Note 1 – Summary of Significant Accounting Policies (Continued)

V. Implementation of New GASB Pronouncements (Continued)

In March 2022, GASB issued Statement No. 99, *Omnibus 2022,* to enhance comparability in accounting and financial reporting and to improve the consistency of authoritative literature by addressing (1) practice issues that have been identified during implementation and application of certain GASB Statements and (2) accounting and financial reporting for financial guarantees. Implementation of this Statement did not have a significant effect to the City's financial statements for the fiscal year ended June 30, 2023

Note 2 – Stewardship, Compliance and Accountability

A. Deficit Net Position

In the Government-Wide Financial Statements, the City had a deficit unrestricted net position at June 30, 2023 for its governmental activities of $(115,019,564) and business-type activities of $(32,642,965). The deficit was mainly due to the reporting of the aggregate net pension liabilities, the aggregate net OPEB liabilities and the pension obligation bonds issued to pay for the unfunded pension liabilities. The aggregate net pension liabilities reported were $16,120,826 and $3,233,030 for governmental activities and business-type activities, respectively. The aggregate net OPEB liabilities were $64,768,264 and $8,020,898 for governmental activities and business-type activities, respectively. The Pension Obligation Bonds were $73,832,926 and $20,787,074 for governmental activities and business-type activities, respectively.

The following funds had a deficit fund balance/net position at June 30, 2023:

Nonmajor Governmental Funds:	
Public Safety Grants Special Revenue Fund	$ (57,980)
Internal Service Funds:	
Workers' Compensation Fund	(11,493,125)

In addition, the GTrans Enterprise had deficit unrestricted net position of $(24,503,020) at June 30, 2023.

The net position balance includes both short and long-term liabilities. The deficit balances are expected to be recovered through future interfund transfers and other revenues as applicable for this purpose.

B. Expenditures in Excess of Appropriations

The following funds had expenditures in excess of appropriations:

Fund	Appropriations	Expenditures	Excess of Expenditures over Appropriations
Major Governmental Funds:			
General Fund			
General government:			
Non-departmental	$ 1,015,399	$ 1,488,894	$ 473,495
Public works	6,634,386	6,887,999	253,613
Community development	2,618,308	2,620,660	2,352
Capital outlay	888,000	2,454,195	1,566,195
Debt service:			
Principal	-	592,688	592,688
Interest and fiscal charges	-	32,659	32,659

Note 2 – Stewardship, Compliance and Accountability (Continued)

B. Expenditures in Excess of Appropriations (Continued)

Fund	Appropriations	Expenditures	Excess of Expenditures over Appropriations
2006 Refunding COPs, Series A Debt Service Fund			
Interest and fiscal charges	401,340	402,117	777
2014 Taxable Lease Revenue Refunding Bonds Debt Service Fund			
Debt service:			
Interest and fiscal charges	441,011	441,157	146
2020 Taxable Pension Obligation Bonds Debt Service Fund			
Debt service:			
Principal retirement	2,859,250	2,859,799	549
Nonmajor Governmental Funds:			
Gas Tax Special Revenue Fund			
Public works	565,660	597,910	32,250
Debt service:			
Principal retirement	-	19,606	19,606
Public Safety Grants Special Revenue Fund			
Public safety	276,126	303,884	27,758
Debt service:			
Principal retirement	-	4,463	4,463
Public Works Grants Special Revenue Fund			
Recreation and human services	10,000	17,910	7,910
Human Services Grants Special Revenue Fund			
Capital Outlay	-	10,000	10,000
Debt service:			
Principal retirement	4,346	10,147	5,801

Note 3 – Cash and Investments

The City maintains a cash and investment pool, which includes cash balances and authorized investments of all funds. Certain restricted funds which are held and invested by independent outside custodians through contractual agreements are not pooled. These restricted funds include cash and investments with fiscal agents.

The City had the following cash and investments at June 30, 2023:

	Government-Wide Financial Statement		
	Governmental Activities	Business-Type Activities	Total
Cash and investments	$ 77,295,313	$ 25,240,370	$ 102,535,683
Cash and investments held by fiscal agents	13,807,281	-	13,807,281
Total cash and investments	$ 91,102,594	$ 25,240,370	$ 116,342,964

Note 3 – Cash and Investments (Continued)

The City's cash and investments at June 30, 2023, in more detail:

Cash:	
Petty cash	$ 7,200
Demand deposits	18,270,532
Total cash and cash equivalents	18,277,732
Investments:	
Money market mutual fund	48,133,970
U.S. Treasury	14,363,188
Negotiable certificates of deposit	2,632,368
Corporate notes	6,194,599
Local Agency Investment Fund	5,216,245
U.S. Government sponsored enterprise securities	5,969,728
Foreign negotiable certificates of deposit	1,747,853
Total investments	84,257,951
Total cash and investments	102,535,683
Cash and investments with fiscal agents	13,807,281
Total	$ 116,342,964

A. Deposits

The carrying amounts of the City's demand deposits were $18,270,532 at June 30, 2023. Bank balances at that date were $20,193,388, the total amount of which was collateralized or insured with accounts held by the pledging financial institutions in the City's name as discussed below.

The California Government Code requires California banks and savings and loan associations to secure the City's cash deposits by pledging securities as collateral. This Code states that collateral pledged in this manner shall have the effect of perfecting a security interest in such collateral superior to those of a general creditor. Thus, collateral for cash deposits is considered to be held in the City's name.

The market value of pledged securities must equal at least 110% of the City's cash deposits. California law also allows institutions to secure City deposits by pledging first trust deed mortgage notes having a value of 150% of the City's total cash deposits. The City may waive collateral requirements for cash deposits, deposits, which are fully insured up to $250,000 by the Federal Deposit Insurance Corporation ("FDIC"). The City did not waive the collateral requirement for deposits insured by FDIC.

The City follows the practice of pooling cash and investments of all funds, except for funds required to be held by fiscal agents under the provisions of bond indentures. Interest income earned on pooled cash and investments is allocated on an accounting period basis to the various funds based on the period-end cash and investment balances. Interest income from cash and investments with fiscal agents is credited directly to the related fund.

Note 3 – Cash and Investments (Continued)

B. Investments

Under the provisions of the City's investment policy, and in accordance with California Government Code, the following investments are authorized:

Authorized Investment Type	Maximum Maturity	Maximum Percentage of Portfolio *	Maximum Investment in One Issuer
Municipal securities	5 years	30%	5%
United States treasury obligations	5 years	No Limit	No Limit
U.S. Government sponsored enterprise securities	5 years	No Limit	25%
Bankers' acceptances	180 days	40%	5%
Commercial paper	270 days	25%	5%
Negotiable certificates of deposit	5 years	30%	5%
Federally insured time deposits	5 years	20%	Federally Insured
Collateralized time deposits	5 years	20%	Federally Insured
Certificate of deposit placement service ("CDARS")	5 years	30%	Federally Insured
Local Agency Investment Fund ("LAIF")	N/A	No Limit	No Limit
Medium-term notes	5 years	30%	5%
Asset-Backed, Mortgage-Backed, Mortgage Pass-Through Securities, and Collateralized Mortgage	5 years	20%	5%
Mutual funds	N/A	20%	10%
Money market mutual funds	N/A	20%	20%
Supranationals	5 years	30%	10%
Investment Trust of California ("CalTrust")	N/A	No Limit	No Limit

N/A - Not Applicable

* Excluding amounts held by bond trustees that are not subject to California Government Code restrictions.

The City is a participant in LAIF which is regulated by California Government Code Section 16429 under the oversight of the Treasurer of the State of California. The City's investments with LAIF at June 30, 2023, included a portion of the pool funds invested in Structured Notes and Asset-Backed Securities:

Structured Notes: debt securities (other than asset-backed securities) whose cash flow characteristics (coupon rate, redemption amount, or stated maturity) depend upon one or more indices and/or that have embedded forwards or options.

Asset-Backed Securities: generally, mortgage-backed securities that entitle their purchasers to receive a share of the cash flows from a pool of assets such as principal and interest repayments from a pool of mortgages (for example, Collateralized Mortgage Obligations) or credit card receivables.

As of June 30, 2023, the City had $5,216,245 invested in LAIF, which had invested 2.78% of the pool investment funds in Structured Notes and Asset-Backed Securities. The fair value of the City's portion in the pool is the same as the value of the pool shares and reported at amortized cost.

Note 3 – Cash and Investments (Continued)

C. Fair Value Measurement

At June 30, 2023, investments are reported at fair value. The following table presents the fair value measurements of investments on a recurring basis and the levels with GASB 72 fair value hierarchy in which the fair value measurements fall at June 30, 2023:

	Measurement Input			
Investment Type	Quoted Prices in Active Markets for Identical Assets (Level 1)	Significant Other Observable Inputs (Level 2)	Uncategorized[3]	Total
Money market mutual fund	$ -	$ -	$ 48,133,970	$ 48,133,970
U.S. Treasury	14,363,188	-	-	14,363,188
Negotiable certificates of deposit [1]	-	2,632,368	-	2,632,368
Corporate notes[1]	-	6,194,599	-	6,194,599
Local Agency Investment Fund	-	-	5,216,245	5,216,245
U.S. Government sponsored enterprise securities [1]	-	5,969,728	-	5,969,728
Foreign negotiable certificates of deposit [2]	-	1,747,853	-	1,747,853
Cash and investments with fiscal agents:				
Money market mutual fund	-	-	13,807,281	13,807,281
Total	$ 14,363,188	$ 16,544,548	$ 67,157,496	$ 98,065,232

[1] Pricing based on Institutional Bond Quotes - evaluations based on various market and industry inputs.

[2] Pricing based on Intercontinental Exchange Extel Financial Ltd - evaluations based on various market factors.

[3] Cash and cash equivalent.

D. Risk Disclosures

<u>*Interest Rate Risk*</u> - As a means of limiting its exposure to fair value losses arising from rising interest rates, the City's investment policy limits investments to a maximum maturity of five years. At June 30, 2023, the City had the following investment maturities:

		Investment Maturities (in Years)				
Investment Type	Fair Value	Less Than 1 Year	1 to 2 Years	2 to 3 Years	3 to 4 Years	4 to 5 Years
Money market mutual fund	$ 48,133,970	$ 48,133,970	$ -	$ -	$ -	$ -
U.S. Treasury	14,363,188	4,541,608	2,737,475	3,405,764	1,881,690	1,796,651
Negotiable certificates of deposit	2,632,368	451,050	224,567	432,165	1,184,113	340,473
Corporate notes	6,194,599	1,771,818	1,726,336	1,047,712	640,955	1,007,778
Local Agency Investment Fund	5,216,245	5,216,245	-	-	-	-
U.S. Government sponsored enterprise securities	5,969,728	2,932,525	1,099,474	790,217	-	1,147,512
Foreign negotiable certificates of deposit	1,747,853	873,609	874,244	-	-	-
Cash and investments with fiscal agents:						
Money market mutual fund	13,807,281	13,807,281	-	-	-	-
Total	$ 98,065,232	$ 77,728,106	$ 6,662,096	$ 5,675,858	$ 3,706,758	$ 4,292,414

<u>*Custodial Credit Risk*</u> - For deposits, custodial credit risk is the risk that, in the event of the failure of a depository financial institution, the City will not be able to recover its deposits or will not be able to recover collateral securities that are in the possession of an outside party. For an investment, custodial credit risk is the risk that, in the event of the failure of the counterparty (e.g., broker-dealer), the City will not be able to recover the value of its investments or collateral securities that are in the possession of an outside party.

Note 3 – Cash and Investments (Continued)

D. Risk Disclosures (Continued)

Credit Risk - State law limits investments in commercial paper and corporate bonds to the top two ratings issued by nationally recognized statistical rating organizations (NRSROs). It is the City's policy to limit its investments in these investment types to the top rating issued by Standard & Poor's and Moody's Investors Service. At June 30, 2023, the City's credit risks, expressed on a percentage basis, were as follows:

Credit Quality Distribution for Securities
with Credit Exposure as a Percentage of Total Investments

Investment Type	Moody's Credit Rating	S&P's Credit Rating	% of Investments with Interest Rate Risk
Local Agency Investment Fund	Not Rated	Not Rated	6.19%
U.S. Treasury	AAA	Not Rated	17.05%
U.S. Government sponsored enterprise securities	AAA	AA+	7.09%
Negotiable certificates of deposit	Not Rated	Not Rated	3.12%
Foreign negotiable certificates of deposit	A2	Aa	2.07%
Corporate notes	A	A	7.35%
Money market mutual fund	P-1	Aa	57.13%
Total			100.00%

Concentration of Credit Risk - The City's investment policy states that no more than 5% of the City's total investment portfolio shall be invested in a single type or with a single financial institution. The only exception to these limits shall be the investment in U.S. Treasury and authorized pools. There are no investments in any one issuer than the external investment pools that represent 5% or more of total City investments.

Note 4 – Other Receivables

A. YMCA Receivables

In February 1994, the City entered into a long-term lease contract to lease land to the YMCA for construction of a new YMCA facility that would benefit the community. The facility opened on February 6, 1995 with a 30-year lease term, ending in 2024. Under the terms of the agreement, the maximum amount that the City could receive was $1,400,000. This amount is payable in monthly payments, with annual rent adjustments over a 30-year lease term. In January 2023, the monthly payment was increased from $71 to $367 per month. At the adjustment date, annual rent was equal to total rent of $1,400,000 less all previous payments, multiplied by the six-month average LAIF interest rate. The lease includes two 25-year options to renew and an option to purchase the land at the end of the lease for the amount of $1,400,000 reduced by the amount already paid as of the time of purchase. As of June 30, 2023, future lease payments from the YMCA, including interest, were $369,299. Since the City has not earned the revenue for the future lease payments, there was no revenue recognized or receivables reported at June 30, 2023 for these future lease payments.

B. State Mandated Claims Reimbursement

The City recorded an outstanding receivable of $731,858 for the State Mandated Claims Reimbursement (SB90 Claims) from the State of California (the "State"). The payments of the mandated claims reimbursement are subject to State approval and management cannot estimate the timing and amount of the payments that will be made and reported an allowance for doubtful accounts in the amount of $731,858. As a result, both the General Fund in the governmental fund financial statements and governmental activities in the government-wide financial statements reported zero balances for accounts receivable associated with the State Mandated Claims Reimbursement as of June 30, 2023.

Note 5 – Loans Receivable

Loans receivable consists of Home-Owner Occupied Deferred Loans and Spring Park Senior Villa Developer Loan as following:

	Balance July 1, 2022	Additions	Deletions	Allowance	Balance June 30, 2023
Home-Owner Occupied Deferred Loans					
CalHOME	$ 372,094	$ -	$ -	$ -	$ 372,094
State HOME Loans	1,594,850	-	(12,875)	-	1,581,975
Subtotal	1,966,944	-	(12,875)	-	1,954,069
Spring Park Senior Villa Developer Loan	3,632,103	86,224	-	(3,718,327)	-
Total	$ 5,599,047	$ 86,224	$ (12,875)	$ (3,718,327)	$ 1,954,069

A. Home-Owner Occupied Deferred Loans

The City issues deferred payment loans to home owners funded by the Federal Home Investment Partnerships Program ("HOME Program") and CalHOME to improve the living conditions of the lower income families. These loans are to be repaid to the City, and the repayments of the loans are used to fund future home-owner occupied deferred loans. As of June 30, 2023, the outstanding loan balance is $1,954,069.

B. Spring Park Senior Villa Developer Loan

The City entered into a development agreement on August 1, 2013, with Spring Park Senior Villa, Inc., a nonprofit organization for the development of the Spring Park Senior Villa in the City. The agreement provided funding for the development of 36 rental units and one manager unit ("the Project") up to $2,874,115 for construction. The loan bears 3% simple interest over a term of 55 years. The repayment of the loan is based on the residual receipts of the rental units. The affordability covenant also expires in 55 years after completion of the project. As of June 30, 2023, the City funded $2,874,115 for the development of the project and accrued interest in the amount of $844,212 which was required by the State of California. This results the City in reporting loans receivable in the amount of $3,718,327. However, management estimated that the loans will not be repaid due to negative residual receipts and reported an allowance for doubtful accounts in the amount of $3,718,327. As a result, both the Economic Development Grants Special Revenue Fund in the governmental fund financial statements and governmental activities in the government-wide financial statements reported zero balances for loans receivable associated with the Spring Park Senior Villa as of June 30, 2023.

Note 6 – Interfund Transactions

A. Government-Wide Financial Statements

Internal Balances - At June 30, 2023, the City had the following internal receivable and payable, which represents internal service charges between the governmental activities and business-type activities:

	Internal Payable
Internal Receivable	Business-Type Activities
Governmental Activities	$ 17,763,827

Note 6 – Interfund Transactions (Continued)

A. Government-Wide Financial Statements (Continued)

Transfers – For the year ended June 30, 2023, the City had the following transfers:

	Transfers Out
Transfers In	Business-Type Activities
Governmental Activities	$ 515,854

The purposes of the transfers were for subsidizing the governmental activities for public works engineering job costs and administrative costs.

B. Fund Financial Statements

Due From/To Other Funds - At June 30, 2023, the City had the following due from/to other funds:

	Due From Other Funds
Due To Other Funds	General Fund
Governmental Funds:	
Economic Development Grants Special Revenue Fund	$ 261,773
City Debt Service Fund	349,271
Nonmajor Governmental Funds	2,320,365
Proprietary Fund:	
GTrans Enterprise Fund	7,093,382
Total	$ 10,024,791

The above amounts resulted from temporary reclassifications made at June 30, 2023 to cover cash shortfalls.

Transfers In/Out – During the year ended June 30, 2023, the City had the following transfers in/out, which arise in the normal course of operations:

	Transfers In							
	Governmental Funds					Enterprise Funds		
Transfers Out	General Fund	Economic Development Grants Special Revenue	City Capital Projects Fund	City Debt Service	Nonmajor Governmental	Nonmajor Sewer Enterprise Fund	Internal Service Funds	Total
Governmental Funds:								
General Fund	$ -	$ 1,729	$ 854,898	$ 8,018,634	$ 319,527	$ -	$ 1,850,000	$ 11,044,788
Economic Development Grants Special Revenue Fund	-	-	310,525	-		-	-	310,525
Debt Service Fund	-	-	57,771	-		-	-	57,771
Nonmajor Governmental Funds	2,642,735	-	4,694,021	118,808		49,281	-	7,504,845
Enterprise Funds:								
GTrans	-	-	-	-	1,967	-	-	1,967
Sewer	134,634	-	428,534	-	-	-	-	563,168
Internal Service Funds	500,000	-	-	5,516	-	-	1,136,852	1,642,368
Total	$ 3,277,369	$ 1,729	$ 6,345,749	$ 8,142,958	$ 321,494	$ 49,281	$ 2,986,852	$ 21,125,432

Note 6 – Interfund Transactions (Continued)

B. Fund Financial Statements (Continued)

Transfers In/Out (Continued)

General Fund transferred $1,729 to Economic Development Fund to cover the unclaimed expenditures, $854,898 to the City Capital Projects Fund to fund the deferred maintenance projects, $8,018,634 to Debt Service Fund for debt service payments and bank admin fees, $319,527 to Nonmajor Governmental Funds to cover deficit grants funds and FEMA 10% matching requirement, and $1,850,000 to Internal Service Funds to pay as you go general liability and workers' compensation liability.

Economic Development Grants Special Revenue funds transferred $310,525 to Nonmajor Governmental Funds to fund capital projects.

Transfers of $57,771 from Debt Service Fund to the City Capital Projects Fund was to fund for community projects.

Nonmajor Governmental Funds transfers to the General Fund consists of $969,295 for fiscal year 2023 ARPA claims and qualified expenditures, $829,080 for job costs relating capital projects, $75,500 for police department expenditures, $222,466 for street sweeping program, $521,932 for tree maintenance and street maintenance program, and $24,462 for grant reimbursements and administration. Transfers from Nonmajor Governmental Funds of $4,694,021 to the City Capital Projects Fund are for grant funded projects, $118,808 to Debt Service Funds are for debt service payments in lieu of PERS UAL, and $49,281 to reimburse Nonmajor Sewer Enterprise Fund for street sweeping supplies and maintenance.

GTrans Enterprise Funds transferred $1,967 to Nonmajor Governmental Fund to cover FEMA 10% matching requirement.

Sewer Enterprise Funds transfers consists of transfer of $134,634 to the General Fund for job costs related to capital projects and $428,534 to City Capital Projects Fund to fund the sewer funded capital projects.

Internal Service Funds transfers consists of transfer of $500,000 to City OPEB fund to reduce OPEB liability, $5,516 to Debt Service Fund for debt service payments in lieu of PERS UAL, and $1,136,852 to Internal Service Funds to pay as you go workers' compensation liability for $400,000 and pay as you general liability for $736,852.

Note 7 – Capital Assets

A. Governmental Activities

A summary of changes in the capital assets for the governmental activities for the year ended June 30, 2023 is as follows:

	Governmental Activities				
	Balance July 1, 2022 (As Restated)	Additions	Deletions	Transfers	Balance June 30, 2023
Capital assets, not being depreciated:					
Land	$ 11,544,572	$ 275,777	$ -	$ -	$ 11,820,349
Monuments	63,893	-	-	-	63,893
Construction in progress	2,247,985	4,582,051	-	(119,272)	6,710,764
Total capital assets, not being depreciated	13,856,450	4,857,828	-	(119,272)	18,595,006
Capital assets, being depreciated:					
Buildings/structures and improvements	26,264,560	351,949	-	-	26,616,509
Machinery and equipment	12,848,293	598,834	(190,898)	-	13,256,229
Infrastructure:					
Street lights network	5,491,961	-	-	-	5,491,961
Traffic lights network	12,940,788	-	-	-	12,940,788
Roadway network	57,773,073	888,183	-	119,272	58,780,528
Total capital assets, being depreciated	115,318,675	1,838,966	(190,898)	119,272	117,086,015
Less accumulated depreciation for:					
Buildings/structures and improvements	(19,179,441)	(648,223)	-	-	(19,827,664)
Machinery and equipment	(9,884,473)	(1,024,951)	187,321	-	(10,722,103)
Infrastructure:		-			
Street light network	(1,033,916)	(43,080)	-	-	(1,076,996)
Traffic lights network	(12,676,832)	(12,570)	-	-	(12,689,402)
Roadway network	(32,234,727)	(1,225,092)	-	-	(33,459,819)
Total accumulated depreciation	(75,009,389)	(2,953,916)	187,321	-	(77,775,984)
Total capital assets, being depreciated, net	40,309,286	(1,114,950)	(3,577)	119,272	39,310,031
Intangible assets, being amortized					
Right-to-use lease assets	531,835	357,226	(159,550)	-	729,511
Right-to-use subscription assets	755,138	701,225	-	-	1,456,363
Total intangible assets, being amortized	1,286,973	1,058,451	(159,550)	-	2,185,874
Less accumulated amortization for:					
Right-to-use lease assets	(208,667)	(223,359)	159,550	-	(272,476)
Right-to-use subscription assets	-	(337,642)	-	-	(337,642)
Total accumulated amortization	(208,667)	(561,001)	159,550	-	(610,118)
Total intangible assets, being amortized, net	1,078,306	497,450	-	-	1,575,756
Governmental activities capital assets, net	$ 55,244,042	$ 4,240,328	$ (3,577)	$ -	$ 59,480,793

Depreciation and amortization expenses were charged to functions/programs of the governmental activities for the fiscal year ended June 30, 2023 as follows:

	Depreciation	Amortization
General government	$ 823,977	$ 224,590
Public safety	626,742	198,226
Public works	1,426,704	48,467
Community development	-	37,170
Recreation and human services	76,493	52,548
Total depreciation expense	$ 2,953,916	$ 561,001

Note 7 – Capital Assets (Continued)

B. Business-Type Activities

A summary of changes in the capital assets for the business-type activities for the year ended June 30, 2023 is as follows:

	Business-Type Activities				
	Balance July 1, 2022 (As Restated)	Additions	Deletions	Transfers	Balance June 30, 2023
Capital assets, not being depreciated:					
Land	$ 12,956,405	$ -	$ -	$ -	$ 12,956,405
Construction in progress	4,870,249	3,182,735	-	(248,550)	7,804,434
Total capital assets, not being depreciated	17,826,654	3,182,735	-	(248,550)	20,760,839
Capital assets, being depreciated:					
Buildings/structures and improvements	39,893,428	-	-	-	39,893,428
Buses	44,887,487	-	(1,536,982)	24,765	43,375,270
Machinery and equipment	12,153,152	443,176	(30,508)	196,935	12,762,755
Furniture and fixtures	1,625,521	-	(12,482)	26,850	1,639,889
Infrastructure	11,184,496	-	-	-	11,184,496
Total capital assets, being depreciated	109,744,084	443,176	(1,579,972)	248,550	108,855,838
Less accumulated depreciation for:					
Buildings/structures and improvements	(13,809,262)	(1,022,908)	-	-	(14,832,170)
Buses	(32,391,832)	(1,250,894)	1,536,982	-	(32,105,744)
Machinery and equipment	(9,497,604)	(1,029,746)	30,508	-	(10,496,842)
Furniture and fixtures	(1,530,935)	(57,306)	12,482	-	(1,575,759)
Infrastructure	(10,628,626)	(33,689)	-	-	(10,662,315)
Total accumulated depreciation	(67,858,259)	(3,394,543)	1,579,972	-	(69,672,830)
Total capital assets, being depreciated, net	41,885,825	(2,951,367)	-	248,550	39,183,008
Intangible assets, being amortized					
Right-to-use lease assets	304,112	26,484	(304,112)	-	26,484
Right-to-use subscription assets	205,064	202,935	-	-	407,999
Total intangible assets, being amortized	509,176	229,419	(304,112)	-	434,483
Less accumulated amortization for:					
Right-to-use lease assets	(152,056)	(165,298)	304,112	-	(13,242)
Right-to-use subscription assets	-	(105,297)	-	-	(105,297)
Total accumulated amortization	(152,056)	(270,595)	304,112	-	(118,539)
Total intangible assets, being amortized, net	357,120	(41,176)	-	-	315,944
Business-type activities capital assets, net	$ 60,069,599	$ 190,192	$ -	$ -	$ 60,259,791

Depreciation and amortization expenses for business-type activities for the year ended June 30, 2023 was charged as follows:

	Depreciation	Amortization
Gtrans major enterprise fund	$ 3,253,834	$ 250,352
Sewer nonmajor enterprise fund	140,709	20,243
Total depreciation expense	$ 3,394,543	$ 270,595

Note 8 – Long-Term Liabilities

A. Governmental Activities

A summary of changes in long-term liabilities for governmental activities for the year ended June 30, 2023 is as follows:

	Balance July 1, 2022 (As Restated)	Additions	Deletions	Balance June 30, 2023	Due within One Year	Due in more One Year
2006 Refunding Certificates of Participation Series A - publicly offered	$ 6,565,000	$ -	$ (625,000)	$ 5,940,000	$ 665,000	$ 5,275,000
2007 Refunding Revenue Bonds, Series A - publicly offered	1,315,000	-	(120,000)	1,195,000	125,000	1,070,000
2014 Taxable Lease Revenue Refunding Bonds - publicly offered	8,815,000	-	(65,000)	8,750,000	70,000	8,680,000
Bond discount - 2014 Taxable Lease Revenue Refunding Bonds	(192,173)	-	13,884	(178,289)	(13,884)	(164,405)
2017 Direct Purchase Lease - Private placement	565,000	-	(280,000)	285,000	285,000	-
2016 SCE On-Bill Financing Loan - Direct borrowing	43,361	-	(14,296)	29,065	14,296	14,769
2020 Taxable Pension Obligation Bonds - publicly offered	76,692,725	-	(2,859,799)	73,832,926	3,285,063	70,547,863
2021 Lease Revenue Bonds - Publicly offered	12,880,000	-	(440,000)	12,440,000	465,000	11,975,000
Bond premium - 2021 Lease Revenue Bonds	2,008,657	-	(106,654)	1,902,003	106,654	1,795,349
Loan payable	3,632,103	86,224	-	3,718,327	-	3,718,327
Lease payable	337,409	346,917	(224,691)	459,635	157,234	302,401
Subscription liabilites	755,138	701,226	(424,203)	1,032,161	414,695	617,466
Claims payable	16,803,625	8,658,461	(7,121,728)	18,340,358	4,811,358	13,529,000
Compensated absences	8,758,831	4,378,870	(3,912,725)	9,224,976	1,853,798	7,371,178
Total	$ 138,979,676	$ 14,171,698	$ (16,180,212)	$ 136,971,162	$ 12,239,214	$ 124,731,948

Typically, the General Fund has been used to liquidate the liability for compensated absences, claims payable, and net other postemployment benefits.

2006 Certificates of Participation, Series A – Original Issuance $12,495,000

In June 2006, the Agency issued the 2006 Refinancing Project, Series A Taxable Certificates of Participation in the amount of $12,495,000. The purpose of the issue was to refinance the City's 1999 Certificates of Participation in connection with a Memorandum of Understanding ("MOU") entered into with certain financial institutions.

Pursuant to the MOU, the Agency paid the financial institutions $19 million (the "Initial Amount") as prepayment of the 1999 Certificates, of which $18 million were funded by the 2006 Series A and B Certificates and the balance of $1 million from other available City funds. Upon payment of the Initial Amount, the 1999 Leases as well as the pledges and security interests granted in connection with the 1999 Leases will be terminated and the City's obligations under the Reimbursement Agreement for the 1999 Certificates will be terminated. The Initial Payment represents approximately 75% of the principal owed.

Interest rates for the 2006A Certificates range from 5.98% to 6.38% with principal maturing through July 1, 2030.

Mandatory prepayment of the 2006 Series A Certificates occurred in July 2008 and will occur again in July 2030. The certificates of participation debt service payments will be made from the debt service funds.

Note 8 – Long-Term Liabilities (Continued)

A. Governmental Activities (Continued)

2006 Certificates of Participation, Series A – Original Issuance $12,495,000 (Continued)

The amount outstanding at June 30, 2023 totaled $5,940,000. The annual debt service requirements on these certificates are as follows:

Fiscal Year	Principal	Interest	Total
2024	$ 665,000	$ 357,759	$ 1,022,759
2025	705,000	314,056	1,019,056
2026	750,000	267,641	1,017,641
2027	800,000	218,196	1,018,196
2028	850,000	165,561	1,015,561
2029-2031	2,170,000	169,070	2,339,070
Total	$ 5,940,000	$ 1,492,283	$ 7,432,283

2007 Refunding Revenue Bonds, Series A – Original Issuance $2,800,000

In January 2007, the City issued the South Bay Regional Public Communications Authority Refunding Revenue Bonds, 2007 Series A in the amount of $2,800,000. The purpose of the bonds was to advance refund the South Bay Regional Public Communications Authority Revenue Bonds, 2001 Series A, to provide a reserve fund for the Bonds, and to pay certain costs of issuance of the Bonds. The 2001 Series A Bonds were fully redeemed as of January 1, 2012.

The bonds accrue interest at rates between 5% and 5.125%. Interest on the bonds is payable semiannually on each January 1 and July 1, commencing July 1, 2007. Principal payments are due in annual installments ranging from $70,000 to $175,000, commencing July 1, 2007 through January 1, 2031. The bonds are subject to optional and mandatory redemption prior to maturity. The refunding revenue bonds debt service payments will be made from the debt service funds.

The amount outstanding at June 30, 2023 totaled $1,915,000. The annual debt service requirements on these bonds are as follows:

Fiscal Year	Principal	Interest	Total
2024	$ 125,000	$ 60,575	$ 185,575
2025	130,000	54,325	184,325
2026	135,000	47,825	182,825
2027	145,000	41,075	186,075
2028	155,000	33,825	188,825
2029-2031	505,000	52,232	557,232
Total	$ 1,195,000	$ 289,857	$ 1,484,857

Note 8 – Long-Term Liabilities (Continued)

A. Governmental Activities (Continued)

2014 Taxable Lease Revenue Refunding Bonds – Original Issuance $9,110,000

In December 2014, the City issued the Taxable Lease Revenue Refunding Bonds, Series 2014 in the amount of $9,110,000 to current refund 2006 Certificate of Participation, Series B. The current refunding resulted in an economic gain in the amount of $1,637,398 and saving in debt service payments in the amount of $2,360,051. The current refunding resulted in no deferred gains or losses as the bond proceeds net of the issuance discount was sufficient to cover repayment of 2006 Certificates of Participation, Series B, the interests due, and the issuance cost on the 2014 Taxable Lease Revenue Refunding Bonds.

The bonds bear interest at rates between 3.95% and 5%. Interest on the bonds is payable annually on each May 1 and November 1. Principal payments are due in annual installments ranging from $55,000 to $1,430,000, commencing May 1, 2018 through May 1, 2036. The bonds are subject to optional and mandatory redemption prior to maturity. The refunding revenue bonds debt service payments will be made from the debt service funds.

The amount outstanding at June 30, 2023 totaled $8,750,000. The annual debt service requirements on these bonds as follows:

Fiscal Year	Principal	Interest	Total
2024	$ 70,000	$ 435,799	$ 505,799
2025	70,000	433,034	503,034
2026	75,000	429,709	504,709
2027	75,000	426,148	501,148
2028	80,000	422,586	502,586
2029-2033	4,605,000	1,776,289	6,381,289
2034-2036	3,775,000	359,250	4,134,250
Total	$ 8,750,000	$ 4,282,814	$ 13,032,814

2017 Direct Purchase Lease

In June 2017, the City issued the Direct Purchase Lease in the amount of $1,635,000 to currently refund 2006 Certificate of Participation, Series C. The economic gain on the current refunding was $112,585 and the saving in debt service payments is $89,363.

The bonds bear interest at 2.07%. Interest on the bonds is payable annually on each July 1. Principal payments are due in annual installments ranging from $245,000 to $285,000, commencing July 1, 2018 through July 1, 2023. The refunding revenue bonds debt service payments will be made from the debt service funds.

In the event of default, the lender may exercise any one or more of the following remedies (a) enforcement of payments without termination, (b) termination of lease, (c) proceeding at law or in equity, or (d) remedies under the lease and facilities lease.

The amount outstanding at June 30, 2023 totaled $285,000. The annual debt service requirements on these bonds as follows:

Fiscal Year	Principal	Interest	Total
2024	$ 285,000	$ 2,950	$ 287,950

Note 8 – Long-Term Liabilities (Continued)

A. Governmental Activities (Continued)

2016 SCE On-Bill Financing Loan

On April 4, 2016, the City entered into a loan agreement with Southern California Edison ("SCE") for the Energy Management Solutions Incentives Application. The agreement provides zero- percent interest financing for the installation of certain energy efficient equipment for up to $126,580, of which is to be repaid over ten years through the Customer's electric utility bills.

SCE may determine the loan to be breached and the City to be in default if the City (1) sells, assigns or otherwise transfers ownership, possession or title of the site or the equipment, (2) fails to pay the money payment when due, (3) closes, discontinues or otherwise causes the termination of the service account(s), or (4) otherwise breaches this agreement, and the breach is not cured as specified therein. Following a breach, SCE shall have the right to declare the entire unpaid balance of the loan obligation due and payable.

The amount outstanding at June 30, 2023 totaled $29,065. The annual debt service requirements on this loan as follows:

Fiscal Year	Principal	Interest	Total
2024	$ 14,296	$ -	$ 14,296
2025	7,769	-	7,769
2026	7,000	-	7,000
Total	$ 29,065	$ -	$ 29,065

2020 Taxable Pension Obligation Bonds – Original Issuance $101,490,000 ($79,193,585 for Governmental Activities)

In November 2020, the City issued the Taxable Pension Obligation Bonds, Series 2020 in the amount of $101,490,000. The purpose of the bonds was to finance a portion of the City's unfunded accrued actuarial liability to the California Public Employees' Retirement System (CalPERS) for the benefit of the City's employees and to pay the costs of issuance of the bonds. Of the original $101,490,000 of bond principal issued, $79,193,585 was allocated to governmental activities and $22,296,415 was allocated to business-type activities.

The bonds accrue interest at rates between 1.081% and 3.363%. Interest on the bonds is payable semiannually on each April 1 and October 1, commencing April 1, 2021. Principal payments are due in annual installments ranging from $2,995,000 to $7,525,000, commencing April 1, 2021 through April 1, 2039. The bonds are not subject to optional and mandatory redemption prior to maturity. The bond debt service payments will be made from the debt service funds.

Note 8 – Long-Term Liabilities (Continued)

A. Governmental Activities (Continued)

2020 Taxable Pension Obligation Bonds – Original Issuance $101,490,000 ($79,193,585 for Governmental Activities) (Continued)

The amount outstanding for the governmental activities at June 30, 2023 totaled $73,832,926. The annual debt service requirements for the governmental activities on these bonds are as follows:

Fiscal Year	Principal	Interest	Total
2024	$ 3,285,063	$ 2,256,000	$ 5,541,063
2025	3,745,440	2,206,659	5,952,099
2026	3,960,023	2,142,911	6,102,934
2027	4,038,053	2,061,097	6,099,150
2028	4,131,689	1,965,558	6,097,247
2029-2033	22,476,540	8,025,107	30,501,647
2034-2038	26,323,422	4,167,588	30,491,010
2039	5,872,696	226,300	6,098,996
Total	$ 73,832,926	$ 23,051,220	$ 96,884,146

2021 Lease Revenue Bonds – Original Issuance $13,155,000

In September 2021, the City of Gardena Financing Agency issued the Lease Revenue Bonds, Series 2021 in the amount of $13,155,000. The purpose of the bonds was to fund various capital projects including the Gardena Community Aquatic & Senior Center, the Community Center, and various Park Improvement projects.

The bonds bear interest at rates between 3% and 5%. Interest on the bonds is payable annually on each May 1. Principal payments are due in annual installments ranging from $275,000 to $915,000, commencing May 1, 2022 through May 1, 2041. The bonds are subject to optional and mandatory redemption prior to maturity. The revenue bonds debt service payments will be made from the debt service funds. The unspent project fund is in the amount of $11,752,150 at June 30, 2023.

The amount outstanding at June 30, 2023 totaled $12,440,000. The annual debt service requirements on these bonds as follows:

Fiscal Year	Principal	Interest	Total
2024	$ 465,000	$ 476,000	$ 941,000
2025	490,000	452,750	942,750
2026	510,000	428,250	938,250
2027	540,000	402,750	942,750
2028	565,000	375,750	940,750
2029-2033	3,270,000	1,432,600	4,702,600
2034-2038	3,940,000	760,650	4,700,650
2039-2041	2,660,000	161,250	2,821,250
Total	$ 12,440,000	$ 4,490,000	$ 16,930,000

Note 8 – Long-Term Liabilities (Continued)

A. Governmental Activities (Continued)

Loans Payable

On August 1, 2013, the City entered into a loan agreement with the State of California Department of Housing and Community Development ("California HCD") for the funding of the Spring Park Senior Villa. The agreement provides funding for the development of the project for up to $2,974,115, of which, $2,874,115 is to be used for construction costs in the form of a construction loan and $100,000 to be used for activity delivery and administration costs in the form of grants. If the HOME-assisted rental housing does not meet the minimum affordability period of 55 years per the City's agreement with the California HCD, the repayment of all HOME funds to the State is required of the City. As of June 30, 2023, the City funded $2,874,115 for the development of the project and accrued interest in the amount of $884,212. This results in the loans payable in the amount of $3,718,327 to the California HCD. Please refer to Note 5B for additional information.

Lease Payable

The City has entered leases for the building, vehicle, and machine uses. The terms of the agreements range from 18 months to 60 months. The calculated interest rates used were between 0.185% to 3.305% based on the term of the agreements.

Principal and interest payments to maturity at June 30, 2023 are as follows:

Fiscal Year	Principal	Interest	Total
2024	$ 157,234	$ 9,164	$ 166,398
2025	97,214	7,105	104,319
2026	70,105	5,307	75,412
2027	52,690	3,596	56,286
2028	46,624	1,876	48,500
2029 - 2032	35,768	2,655	38,423
Total	$ 459,635	$ 29,703	$ 489,338

Subscription Liabilities

The City has entered into subscriptions for information technology arrangements. The terms of the arrangements range from 24 to 60 months with implicit rates used between 0.552% to of 3.305%. Principal and interest to maturity are as follows:

Fiscal Year	Principal	Interest	Total
2024	$ 414,695	$ 24,246	$ 438,941
2025	417,459	14,150	431,609
2026	135,589	4,183	139,772
2027	64,418	1,283	65,701
Total	$ 1,032,161	$ 43,862	$ 1,076,023

Legal Debt Margin

The City is subject to legal debt margin and the City's legal debt limit was in the amount of $302,781,508 at June 30, 2023.

Note 8 – Long-Term Liabilities (Continued)

A. Governmental Activities (Continued)

Compensated Absences

The long-term portion of compensated absences payable has been accrued for the Governmental Activities on the Government-Wide Financial Statements. In prior years, the General Fund has typically been used to liquidate the liability. The balance outstanding at June 30, 2023 was $9,224,976.

B. Business-Type Activities

The following is a summary of changes in long-term liabilities for business-type activities for the year ended June 30, 2023:

	Balance July 1, 2022 (As Restated)	Additions	Deletions	Balance June 30, 2023	Due within One Year	Due in more One Year
2020 Taxable Pension Obligation Bonds - publicly offered	$ 21,592,275	$ -	$ (805,201)	$ 20,787,074	$ 924,937	$ 19,862,137
Lease payable	158,923	26,483	(172,053)	13,353	13,353	-
Subscription liabilities	205,064	202,935	(128,432)	279,567	125,277	154,290
Compensated absences	1,957,424	1,091,857	(1,127,877)	1,921,404	384,281	1,537,123
Total	$ 23,913,686	$ 1,321,275	$ (2,233,563)	$ 23,001,398	$ 1,447,848	$ 21,553,550

2020 Taxable Pension Obligation Bonds – Original Issuance $101,490,000 ($22,296,415 for Business-Type Activities)

In November 2020, the City issued the Taxable Pension Obligation Bonds, Series 2020 in the amount of $101,490,000. The purpose of the bonds was to finance a portion of the City's unfunded accrued actuarial liability to the California Public Employees' Retirement System (CalPERS) for the benefit of the City's employees and to pay the costs of issuance of the bonds. Of the original $101,490,000 of bond principal issued, $79,193,585 was allocated to governmental activities and $22,296,415 was allocated to business-type activities.

The bonds accrue interest at rates between 1.081% and 3.363%. Interest on the bonds is payable semiannually on each April 1 and October 1, commencing April 1, 2021. Principal payments are due in annual installments ranging from $2,995,000 to $7,525,000, commencing April 1, 2021 through April 1, 2039. The bonds are not subject to optional and mandatory redemption prior to maturity. The bond debt service payments will be made from the debt service funds.

The amount outstanding for the business-type activities at June 30, 2023 totaled $20,787,074. The annual debt service requirements for the business-type activities on these bonds are as follows:

Fiscal Year	Principal	Interest	Total
2024	$ 924,937	$ 635,196	$ 1,560,133
2025	1,054,560	621,303	1,675,863
2026	1,114,978	603,355	1,718,333
2027	1,136,948	580,319	1,717,267
2028	1,163,312	553,420	1,716,732
2029-2033	6,328,459	2,259,536	8,587,995
2034-2038	7,411,575	1,173,418	8,584,993
2039	1,652,305	63,716	1,716,021
Total	$ 20,787,074	$ 6,490,263	$ 27,277,337

Note 8 – Long-Term Liabilities (Continued)

B. Business-Type Activities (Continued)

Lease Payable

The City's business-type activities have entered leases for the machine uses. The terms of the agreements range from 18 months to 60 months. The calculated interest rates used were between 0.185% to 3.305% based on the term of the agreements.

Principal and interest payments to maturity at June 30, 2023 are as follows:

Fiscal Year	Principal	Interest	Total
2024	$ 13,353	$ 147	$ 13,500

Subscription Liabilities

The City's business-type activities has entered into subscriptions for information technology arrangements. The terms of the arrangements range from 24 to 60 months with implicit rates used between 0.552% to of 3.305%. Principal and interest to maturity are as follows:

Fiscal Year	Principal	Interest	Total
2024	$ 125,277	$ 7,145	$ 132,422
2025	126,910	4,028	130,938
2026	16,097	850	16,947
2027	11,283	373	11,656
Total	$ 279,567	$ 12,396	$ 291,963

Compensated Absences

All vested vacation and compensatory leave time is recognized as an expense and as a liability in the business-type funds at the time the liability vests. GTrans and the Sewer Enterprise funds have been used to liquidate the liability. The balance outstanding at June 30, 2023 was $1,921,404.

Note 9 – Self-Insurance Programs

A. Self-Insurance Programs of the City

The City is self-insured for the first $750,000 of each workers' compensation claim for both the GTrans and the City, $750,000 each general liability claim and $250,000 of each GTrans claim against the City. In addition, the City carries insurance of individual general liability claims in excess of $750,000 to $25,000,000 with Public Risk Innovation Solutions Management ("PRISM"). Additionally, the City has health insurance coverage for the employees and their families with an annual maximum amount of $1 million for all services.

The City carries stop-loss insurance of individual health benefit claims in excess of $75,000 for Medicare retirees and $50,000 for all other members. At June 30, 2023, $18,340,358 has been accrued for the City's self-insurance programs, of which $4,811,358 is considered to be current. Said accruals represent estimates of amounts to be paid for reported claims and incurred but unreported claims based upon past experience, modified for current trends and information. While the ultimate amounts of losses incurred through June 30, 2023 are dependent on future developments, based upon information provided from the City Attorney, outside counsel and others involved with the administration of the programs, City management believes that the aggregate accrual is adequate to cover such losses. For the prior three (3) fiscal years, no settlements exceeded the City's insurance coverage.

Changes in the balances of claims liabilities during the past three years are as follows:

	Claims Payable					
	Beginning Balance	Expenses and Changes in Estimates	Claims Payments	Ending Balance	Due within One Year	Due in more than One Year
2020-2021	$ 9,412,603	$ 1,243,589	$ (51,718)	$ 10,604,474	$ 8,389,641	$ 2,214,833
2021-2022	10,604,474	6,221,285	(22,134)	16,803,625	12,477,264	4,326,361
2022-2023	16,803,625	8,658,461	(7,121,728)	18,340,358	4,811,358	13,529,000

B. Purchased Insurance

Property Insurance - Several insurance companies underwrite this insurance protection. The City is currently insured according to a schedule of covered property submitted by the City to Alliant Property Insurance Company. Total all-risk property insurance coverage is $100 million. There is a $25,000 per loss deductible.

Crime Insurance - The City purchases crime insurance coverage with a limit of $1 million per occurrence. This policy provides coverage for all City employees. There is a $2,500 per loss deductible.

C. Adequacy of Protection

During the past three fiscal years none of the above programs of protection have had settlements or judgments that exceeded pooled or insured coverage. There have been no significant reductions in insured liability coverage from coverage in the prior year.

Note 10 – Retirement Plans

A. California Public Employees' Retirement System ("CalPERS")

The following is the summary of net pension liability and related deferred outflows of resources and deferred inflows of resources at June 30, 2023 and pension expense for the year then ended.

	Governmental Activities	Business-Type Activities	Total
Deferred outflows of resources:			
Pension contribution made after measurement date:			
Miscellaneous	$ 1,003,640	$ 931,360	$ 1,935,000
Safety	3,126,759	-	3,126,759
Total pension contribution made after measurement date	4,130,399	931,360	5,061,759
Change in assumptions:			
Miscellaneous	1,907,975	1,770,566	3,678,541
Safety	1,274,182	-	1,274,182
Total change in assumptions	3,182,157	1,770,566	4,952,723
Difference in projected and actual earnings on pension investments:			
Miscellaneous	5,122,398	4,753,490	9,875,888
Safety	1,995,544	-	1,995,544
Total difference in projected and actual earnings on pension investments	7,117,942	4,753,490	11,871,432
Differences between expected and actual experience			
Safety	522,995	-	522,995
Adjustment due to differences in proportions:			
Safety	1,569,333	-	1,569,333
Difference between City's contribution and proportionate share of contributions:			
Safety	21,427,278	-	21,427,278
Total deferred outflows of resources	$ 37,950,104	$ 7,455,416	$ 45,405,520
Aggregate net pension liabilities:			
Miscellaneous	$ 3,483,938	$ 3,233,030	$ 6,716,968
Safety	12,636,888	-	12,636,888
Total aggregate net pension liabilities	$ 16,120,826	$ 3,233,030	$ 19,353,856
Deferred inflows of resources:			
Differences between expected and actual experience:			
Miscellaneous	$ 2,058,555	$ 1,910,303	$ 3,968,858
Safety	137,226	-	137,226
Total differences between expected and actual experience	2,195,781	1,910,303	4,106,084
Difference between City's contribution and proportionate share of contributions:			
Safety	9,613,995	-	9,613,995
Adjustment due to differences in proportions:			
Safety	21,653,472	-	21,653,472
Total deferred inflows of resources	$ 33,463,248	$ 1,910,303	$ 35,373,551
Pension Expense:			
Miscellaneous	$ 1,005,018	$ 1,039,862	$ 2,044,880
Safety	38,527,581	-	38,527,581
Total pension expense	$ 39,532,599	$ 1,039,862	$ 40,572,461

Note 10 – Retirement Plans (Continued)

A. California Public Employees' Retirement System ("CalPERS") (Continued)

General Information about the Pension Plan

Plan Description

The City contribution to the California Public Employees Retirement System ("CalPERS"), an agent multiple-employer defined benefit pension plan for miscellaneous employees and a cost-sharing multiple-employer defined benefit plan for safety employees. CalPERS acts as a common investment and administrative agent for participating public entities within the State of California. Benefit provisions and all other requirements are established by state statue and City ordinance. A full description of the pension plan regarding number of employees covered, benefit provisions, assumptions (for funding, but not accounting purposes), and membership information are listed in the June 30, 2020 Annual Actuarial Valuation Report. This report and CalPERS' audited financial statements are publicly available reports that can be obtained at CalPERS' website under Forms and Publications.

Benefit Provided

CalPERS provides retirement and disability benefits, annual cost-of-living adjustments, and death benefits to plan members and beneficiaries. A classic CalPERS member or PEPRA Safety member becomes eligible for service retirement upon attainment of age 50 with at least 5 years of credited service. PEPRA miscellaneous members become eligible for service retirement upon attainment of age 52 with at least 5 years of service. The service retirement benefit is a monthly allowance equal to the product of the benefit factor, years of service, and final compensation.

The final compensation is the monthly average of the member's highest 36 or 12 consecutive months' full-time equivalent monthly pay. Retirement benefits for classic miscellaneous employees are calculated as 2% of average final 12 months compensation. Retirement benefit for PEPRA miscellaneous employees are calculated as 2% of the average final 36 months compensation. Retirement benefits for classic safety employees are calculated as 3% of the average final 12 months compensation. Retirement benefits for PEPRA safety employees are calculated as 2.7% of average final 36 months.

Participant is eligible for non-industrial disability retirement if the participant becomes disabled and has at least 5 years credited service. There is no special age requirement. The standard non-industrial disability retirement benefit is a monthly allowance equal to 1.8 percent of final compensation, multiplied by service.

Industrial disability benefits are not offered to miscellaneous employees. The City provides industrial disability retirement benefit to safety employees. The industrial disability retirement benefit is a monthly allowance equal to 50 percent of final compensation.

An employee's beneficiary may receive the basic death benefit if the employee becomes deceased while actively employed. The employee must be actively employed with the City to be eligible for this benefit. An employee's survivor who is eligible for any other pre-retirement death benefit may choose to receive that death benefit instead of this basic death benefit. The basic death benefit is a lump sum in the amount of the employee's accumulated contributions, where interest is currently credited at 7.5 percent per year, plus a lump sum in the amount of one month's salary for each completed year of current service, up to a maximum of six months' salary. For purposes of this benefit, one month's salary is defined as the member's average monthly full-time rate of compensation during the 12 months preceding death. Upon the death of a retiree, a one-time lump sum payment of $500 will be made to the retiree's designated survivor(s), or to the retiree's estate.

Note 10 – Retirement Plans (Continued)

A. California Public Employees' Retirement System ("CalPERS") (Continued)

General Information about the Pension Plan (Continued)

Benefit Provided (Continued)

Benefit terms provide for annual cost-of-living adjustments to each employee's retirement allowance. Beginning the second calendar year after the year of retirement, retirement and survivor allowances will be annually adjusted on a compound basis by 2 percent.

Employees Covered by Benefit Terms

At June 30, 2021, the valuation date, the following employees were covered by the benefit terms:

	Plans		
	Miscellaneous	Safety	
		Classic	PEPRA
Active employees	293	59	27
Transferred and terminated employees	374	50	8
Retired Employees and Beneficiaries	420	244	0
Total	1,087	353	35

Contributions

Section 20814(c) of the California Public Employees' Retirement Law ("PERL") requires that the employer contribution rates for all public employers be determined on an annual basis by the actuary and shall be effective on the July 1 following notice of a change in the rate. The total plan contributions are determined through CalPERS' annual actuarial valuation process. The actuarially determined rate is the estimated amount necessary to finance the costs of benefits earned by employees during the year, with an additional amount to finance any unfunded accrued liability. The employer is required to contribute the difference between the actuarially determined rate and the contribution rate of employees. The required contribution rates are as follow:

Measurement Period June 30, 2022

	Plans			
	Miscellaneous		Safety	
	Classic	PEPRA	Classic	PEPRA
Employer Contribution Rate	9.250%	9.250%	25.590%	13.980%
Employee Contribution Rate	7.000%	6.750%	9.000%	13.750%

Current Fiscal Year Ended June 30, 2023

	Plans			
	Miscellaneous		Safety	
	Classic	PEPRA	Classic	PEPRA
Employer Contribution Rate	9.180%	9.180%	25.640%	13.660%
Employee Contribution Rate	7.000%	6.750%	9.000%	13.750%

Note 10 – Retirement Plans (Continued)

A. California Public Employees' Retirement System ("CalPERS") (Continued)

Net Pension Liability

Actuarial Methods and Assumption Used to Determine Total Pension Liability

The June 30, 2021 valuation was rolled forward to determine the June 30, 2022 total pension liability, based on following actuarial methods and assumptions:

Actuarial Cost Method	Entry Age Actuarial Cost Method
Actuarial Assumptions:	
Discount Rate	6.90%
Inflation	2.300%
Salary Increases	Varies by Entry Age and Service
Mortality Rate Table[1]	Derived using CalPERS' Membership Data for all Funds.
Post Retirement Benefit Increase	The lesser of contract COLA or 2.30% until Purchasing Power Protection Allowance floor on purchasing power applies, 2.30% thereafter

[1] The mortality table used for June 30, 2022 was developed based on CalPERS-specific data. The probabilities of mortality are based on the 2021 CalPERS Experience Study for the period from 2001 to 2019. Pre-retirement and Post-retirement mortality rates include generational mortality improvement using 80% of Scale MP-2020 published by the Society of Actuaries. For more details on this table, please refer to the CalPERS Experience Study and Review of Actuarial Assumptions report from Novermber 2021 that can be found on the CalPERS website.

Change of Assumptions

Effective with the June 30, 2021 valuation date (2022 measurement date), the accounting discount rate was reduced from 7.15% to 6.90%. In determining the long-term expected rate of return, CalPERS took into account long-term market return expectations as well as the expected pension fund cash flows. Projected returns for all asset classes are estimated, combined with risk estimates, and are used to project compound (geometric) returns over the long term. The discount rate used to discount liabilities was informed by the long-term projected portfolio return. In addition, demographic assumptions and the inflation rate assumption were changed in accordance with the 2021 CalPERS Experience Study and Review of Actuarial Assumptions.

Long-term Expected Rate of Return

The long-term expected rate of return on pension plan investments was determined using a building-block method in which expected future real rates of return (expected returns, net of pension plan investment expense and inflation) are developed for each major asset class.

In determining the long-term expected rate of return, CalPERS took into account both short-term and long-term market return expectations. Using historical returns of all of the funds' asset classes, expected compound (geometric) returns were calculated over the next 20 years using a building-block approach. The expected rate of return was then adjusted to account for assumed administrative expenses of 10 basis points.

Note 10 – Retirement Plans (Continued)

A. California Public Employees' Retirement System ("CalPERS") (Continued)

Net Pension Liability (Continued)

Long-term Expected Rate of Return (Continued)

The expected real rates of return by asset class are as followed:

Asset Class[1]	Assumed Asset Allocation	Real Return Years 1 - 10[1, 2]
Global Equity - Cap-weighted	30.00%	4.54%
Global Equity - Non-cap-weighted	12.00%	3.84%
Private Equity	13.00%	7.28%
Treasury	5.00%	0.27%
Mortgage-backed Securities	5.00%	0.50%
Investment Grade Corporates	10.00%	1.56%
High Yield	5.00%	2.27%
Emerging Market Debt	5.00%	2.48%
Private Debt	5.00%	3.57%
Real Assets	15.00%	3.21%
Leverage	-5.00%	-0.59%
	100.00%	

[1] An expected inflation of 2.30% used for this period.

[2] Figures are based on the 2021 Asset Liability Management study.

Discount Rate

The discount rate used to measure the total pension liability was 6.90%. The projection of cash flows used to determine the discount rate assumed that contributions from plan members will be made at the current member contribution rates and that contributions from employers will be made at statutorily required rates, actuarially determined. Based on those assumptions, the Plan's fiduciary net position was projected to be available to make all projected future benefit payments of current plan members. Therefore, the long-term expected rate of return on plan investments was applied to all periods of projected benefit payments to determine the total pension liability.

Note 10 – Retirement Plans (Continued)

A. California Public Employees' Retirement System ("CalPERS") (Continued)

Changes in the Net Pension Liability

The following table shows the changes in net pension liability for the City's Miscellaneous Plan recognized over the measurement period.

Miscellaneous Plan	Increase (Decrease)		
	Total Pension Liability (a)	Plan Fiduciary Net Position (b)	Net Pension Liability (c) = (a) - (b)
Balance at June 30, 2021 (Valuation Date)	$ 182,840,031	$ 204,584,123	$ (21,744,092)
Changes recognized for the measurement period:			
Service Cost	3,211,338	-	3,211,338
Interest on the total pension liability	12,420,366	-	12,420,366
Changes of benefit terms	-	-	-
Difference between expected and actual experience	(4,506,679)	-	(4,506,679)
Changes of assumptions	5,350,605	-	5,350,605
Plan to plan resource movement	-	-	-
Contributions from the employer	-	2,100,703	(2,100,703)
Contributions from employees	-	1,242,880	(1,242,880)
Net investment income	-	(15,201,569)	15,201,569
Benefit payments, including refunds of employee contributions	(10,568,643)	(10,568,643)	-
Administrative expense	-	(127,444)	127,444
Other miscellaneous income/(expense)	-	-	-
Net changes during July 1, 2021 to June 30, 2022	5,906,987	(22,554,073)	28,461,060
Balance at June 30, 2022 (Measurement Date)	$ 188,747,018	$ 182,030,050	$ 6,716,968

Proportionate Share of Net Pension Liability and Pension Expense

The following table shows the City's safety plan's proportionate share of the risk pool collective net pension liability over the measure period.

Safety Plan	Increase (Decrease)		
	Total Pension Liability (a)	Plan Fiduciary Net Position (b)	Net Pension Liability (asset) (c) = (a) - (b)
Balance at June 30, 2021 (Valuation Date)	$ 229,573,818	$ 257,069,105	$ (27,495,287)
Balance at June 30, 2022 (Measurement Date)	245,640,403	233,003,515	12,636,888
Net Changes during 2021-2022	16,066,585	(24,065,590)	40,132,175

Note 10 – Retirement Plans (Continued)

A. California Public Employees' Retirement System ("CalPERS") (Continued)

Changes in the Net Pension Liability (Continued)

Proportionate Share of Net Pension Liability and Pension Expense (Continued)

The following is the approach established by the plan actuary to allocate the net pension liability and pension expense to the individual employers within the risk pool.

(1) In determining a cost-sharing plan's proportionate share, total amounts of liabilities and assets are first calculated for the risk pool as a whole on the valuation date (June 30, 2021). The risk pool's fiduciary net position ("FNP") subtracted from its total pension liability ("TPL") determines the net pension liability ("NPL") at the valuation date.

(2) Using standard actuarial roll forward methods, the risk pool TPL is then computed at the measurement date (June 30, 2022). Risk pool FNP at the measurement date is then subtracted from this number to compute the NPL for the risk pool at the measurement date. For purposes of FNP in this step and any later reference thereto, the risk pool's FNP at the measurement date denotes the aggregate risk pool's FNP at June 30, 2022 less the sum of all additional side fund (or unfunded liability) contributions made by all employers during the measurement period (2021-2022).

(3) The individual plan's TPL, FNP and NPL are also calculated at the valuation date. TPL is allocated based on the rate plan's share of the actuarial accrued liability. FNP is allocated based on the rate plan's share of market value assets.

(4) Two ratios are created by dividing the plan's individual TPL and FNP as of the valuation date from (3) by the amounts in step (1), the risk pool's total TPL and FNP, respectively.

(5) The plan's TPL as of the Measurement Date is equal to the risk pool TPL generated in (2) multiplied by the TPL ratio generated in (4). The plan's FNP as of the Measurement Date is equal to the FNP generated in (2) multiplied by the FNP ratio generated in (4) plus any additional side fund (or unfunded liability) contributions made by the employer on behalf of the plan during the measurement period.

(6) The plan's NPL at the Measurement Date is the difference between the TPL and FNP calculated in (5).

Deferred outflows of resources, deferred inflows of resources, and pension expense are allocated based on the City's share of net pension liability at the end of measurement date.

The City's proportionate share of the net pension liability was as follows:

June 30, 2021	-0.508390%
June 30, 2022	0.109403%
Change - Increase (Decrease)	0.617793%

Note 10 – Retirement Plans (Continued)

A. California Public Employees' Retirement System ("CalPERS") (Continued)

Changes in the Net Pension Liability (Continued)

Sensitivity of the Net Pension Liability to Changes in the Discount Rate

The following presents the net pension liability of the plans as of the measurement date, calculated using the discount rate of 6.90%, as well as what the net pension liability would be if it were calculated using a discount rate that is 1 percentage-point lower (5.90%) or 1 percentage-point higher (7.90%) than the current rate:

	Plan's Net Pension Liability (asset)		
	Discount Rate - 1% (5.90%)	Current Discount Rate (6.90%)	Discount Rate + 1% (7.90%)
Miscellaneous Plan	$ 31,558,549	$ 6,716,968	$ (13,690,648)
Safety Plan	$ 46,559,444	$ 12,636,888	$ (138,960,837)

Pension Plan Fiduciary Net Position

Detailed information about the plan's fiduciary net position is available in the separately issued CalPERS financial report.

Pension Expense (Credit) and Deferred Outflows and Deferred Inflows of Resources Related to Pensions

For the year ended June 30, 2023, the City recognized pension expense in the amounts of $2,044,880 and $38,527,581 for the miscellaneous plan and safety plan, respectively.

As of measurement date of June 30, 2022, the City has deferred outflows and deferred inflows of resources related to pensions as follows:

Miscellaneous Plan		
	Deferred outflows of Resources	Deferred inflows of Resources
Pension contribution made after measurement date	$ 1,935,000	$ -
Changes of assumptions	3,678,541	-
Difference between expected and actual experience	-	(3,968,858)
Net difference between projected and actual earning on pension plan investments	9,875,888	-
Total	$ 15,489,429	$ (3,968,858)

Note 10 – Retirement Plans (Continued)

A. California Public Employees' Retirement System ("CalPERS") (Continued)

Pension Expense and Deferred Outflows and Deferred Inflows of Resources Related to Pensions (Continued)

Safety Plan	Deferred outflows of Resources	Deferred inflows of Resources
Pension contribution made after measurement date	$ 3,126,759	$ -
Changes of assumptions	1,274,182	-
Difference between expected and actual experience	522,995	(137,226)
Difference between projected and actual earnings on pension plan investments	1,995,544	-
Adjustment due to differences in proportions	1,569,333	(21,653,472)
Difference between City contributions and proportionate share of contributions	21,427,278	(9,613,995)
Total	$ 29,916,091	$ (31,404,693)

The amounts above are net of outflows and inflows recognized in the 2021-22 measurement period expense.

The expected average remaining service lifetime ("EARSL") is calculated by dividing the total future service years by the total number of plan participants (active, inactive, and retired). The EARSL for the miscellaneous plan and the safety risk pool for the 2021-22 measurement period is 3.2 and 3.7 years, which was obtained by dividing the total service years of 3,447 and 574,665 (the sum of remaining service lifetimes of the active employees) by 1,087 and 153,587 (the total number of participants: active, inactive, and retired), respectively.

$1,935,000 and $3,126,759 reported as deferred outflows of resources related to pensions for miscellaneous plan and safety plan, respectively, resulting from the City's contributions subsequent to the measurement date will be recognized as a reduction of the net pension liability and collectively net pension liability, respectively, in the year ending June 30, 2024.

Other amounts reported as deferred outflows and deferred inflows of resources related to pensions will be recognized in the future pension expense as follows:

Measurement Periods Ended June 30	Deferred Outflows/ (Inflows) of Resources	
	Miscellaneous Plan	Safety Plan
2023	$ 1,233,724	$ (2,226,956)
2024	1,537,321	(2,068,692)
2025	1,003,948	(1,537,019)
2026	5,810,578	1,217,306
2027	-	-
Thereafter	-	-
	$ 9,585,571	$ (4,615,361)

Note 10 – Retirement Plans (Continued)

B. Public Agency Retirement System ("PARS")

Defined Contribution Pension Plan

For all of its part-time employees who are not eligible for coverage under the CalPERS pension plan, the City provides pension benefits through a defined contribution plan. In a defined contribution plan, benefits depend solely on amounts contributed to the plan plus investment earnings. The plan is administered as part of the Public Agency Retirement Systems ("PARS"). The PARS Trust Agreement may be amended by a two-thirds majority or greater of the Member Agencies. The plan conforms to the requirements under Internal Revenue Code 401(a) and has received a favorable Letter of Determination from the Internal Revenue Service.

All part-time employees are eligible to participate from the date of employment. Federal legislation requires contributions of at least 7.5 percent to a retirement plan, and City Council resolved to match the employees' contributions up to 3.75 percent. The City's contributions for each employee (and interest earned by the accounts) are fully vested immediately. For the year ended June 30, 2023 the City's payroll covered by the plan was $832,258. The City made employer contributions in the amount of $30,431. There were 74 participants of the Plan as of June 30, 2023.

The assets of the defined contribution pension plan are those of the part-time employees and are not included in the accompanying financial statements.

Note 11 – Other Postemployment Benefits ("OPEB")

At June 30, 2023, total OPEB liability and related deferred outflows of resources and deferred inflows of resources are as follows:

	Governmental Activities	Business-Type Activities	Total
Deferred outflows of resources:			
OPEB contribution made after measurement date	$ 4,966,034	$ 734,925	$ 5,700,959
Change in assumptions	7,779,416	137,399	7,916,815
Differences between expected and actual experience	885,249	1,337,270	2,222,519
Differences in projected and actual earnings	13,084	386,621	399,705
Total deferred outflows of resources	$ 13,643,783	$ 2,596,215	$ 16,239,998
Total other postemployment benefit liabilities	$ 64,768,264	$ 8,020,898	$ 72,789,162
Deferred inflows of resources:			
Change in assumptions	$ 13,762,804	$ 639,876	$ 14,402,680
Differences between expected and actual experience	1,205,353	385,585	1,590,938
Total deferred inflows of resources	$ 14,968,157	$ 1,025,461	$ 15,993,618
OPEB expense	$ 2,914,204	$ 837,668	$ 3,751,872

Note 11 – Other Postemployment Benefits ("OPEB") (Continued)

General Information about the OPEB Plan

Plan Description

The City provides retiree healthcare benefits for employees who retire simultaneously from CalPERS and the City and who meet the qualifying criteria negotiated by the various City labor groups. The OPEB plan is a single employer plan with a trust, but without special funding situation, or non-employer contribution entities. The City offers insurance coverage from Kaiser Permanente and a self-insured PPO.

Miscellaneous employees hired prior to July 1, 2002 must be 55 years of age and have at least 13 years of full-time service with the City. Effective July 1, 2002, miscellaneous (non-management) employees must have at least 20 years of full-time service to qualify. Safety employees must be 50 years of age and have 25 years of full-time service in the police or fire department of the City. In October 2000, City fire services transferred to contracted services with the Los Angeles County Fire District. Postemployment benefits continue only for fire personnel retiring from service prior to that date.

The City's health plan year runs February through January with open-enrollment every January prior to the start of the new plan year. The monthly benefits to be paid by the City are $1,498 and $1,329 per month for the calendar years 2023 and 2022, respectively.

Eligibility

All of the Plan's employees became participants in accordance with a negotiated Memorandum of Understanding ("MOU") as negotiated by each group or bargaining unit. In order to receive benefits, eligible employees must meet the minimum requirements defined in their MOU. At June 30, 2022 valuation date, the following numbers of participants were covered by the benefit terms:

	Plans		
	Governmental Activities	**GTrans**	**Sewer**
Inactives currently receiving benefits	191	43	-
Inactives entitled to benefit payments	-	-	-
Active employees	219	101	4
Total	410	144	4

Contributions

	Fiscal Year Ended June 30, 2023		
	Governmental Activities	Gtrans	Total
Benefit payments	$ 3,216,034	$ 724,778	$ 3,940,812
Trust contributions	1,750,000	-	1,750,000
Total	$ 4,966,034	$ 724,778	$ 5,690,812

Note 11 – Other Postemployment Benefits ("OPEB") (Continued)

Net OPEB Liability

The City's Net OPEB liability was measured as of June 30, 2022, and total OPEB liability used to calculate the net OPEB liability was determined by an actuarial valuation as of June 30, 2022.

Significant Actuarial Assumptions Used for Total OPEB Liability

The total OPEB liability, measured as of June 30, 2022, was determined using the following actuarial assumptions:

Actuarial Cost Method	Entry Age, Level Percent of Pay
Actuarial Assumptions:	
Actuarial Valuation Date	June 30, 2022
Valuation of Fiduciary Net Position	Governmental Activities and Gtrans: Fair value assets. Sewer: No assets held in an irrevocable trust as of the measurement date.
Recognition of deferred inflows and outflows of resources	Closed period equal to the average of the expected remaining service lives of all employees provided with OPEB.
Salary Increases	2.75%
Discount Rate	Governmental Activities and Sewer: 3.54% Gtrans: 6.25%
Inflation Rate	2.50%
Investment Rate of Return	6.25%, net OPEB plan investment expense
Healthcare Cost Trend Rate (City Plan)	6.50% for 2022, 6.00% for 2023, 5.50% for 2024, 5.25% for 2025-2029, 5.00% for 2030-2039, 4.75% for 2040-2049, 4.50% for 2050-2069 and 4.00% for 2070 and later years.
Healthcare Cost Trend Rate (Kaiser)	6.50% for 2022, 6.00% for 2023, 5.50% for 2024, 5.25% for 2025-2029, 5.00% for 2030-2039, 4.75% for 2040-2049, 4.50% for 2050-2069 and 4.00% for 2070 and later years.
Preretirement Mortality:	
Miscellaneous	Preretirement Mortality Rates for Public Agency Miscellaneous from CalPERS Experience Study (2000-2019).
Safety	Preretirement Mortality Rates for Public Agency Police and Fire from CalPERS Experience Study (2000-2019).
Preretirement Mortality:	
Miscellaneous	Post-retirement Mortality Rates for Public Agency Miscellaneous from CalPERS Experience Study (2000-2019).
Safety	Post-retirement Mortality Rates for Public Agency Police and Fire from CalPERS Experience Study (2000-2019).

Actuarial assumptions used in the June 30, 2022 valuation were based on a review of the plan experience during the period June 30, 2022 to June 30, 2022.

Total OPEB Liability

Change in Assumptions

Discount rate changed from 2.16% at June 30, 2021 to 3.54% at June 30, 2022 for the governmental activities and Sewer Enterprise's plans. No change in discount rate for GTrans Plan. Medical plan assumption, trend rate assumption, demographic assumption and mortality improvement scale were updated.

Note 11 – Other Postemployment Benefits ("OPEB") (Continued)

Total OPEB Liability (Continued)

Discount Rate

a. A long-term expected rate of return on OPEB plan investments – to the extent that the OPEB plan's fiduciary net position (if any) is projected to be enough to make projected benefit payments and assets are expected to be invested using a strategy to achieve that return.

b. A yield or index rate for 20-year, tax-exempt general obligation municipal bonds with an average rating of AA/Aa or higher – to the extent that the conditions in (a) are not met. To determine a resulting single (blended) rate, the amount of the plan's projected fiduciary net position (if any) and the amount of projected benefit payments is compared in each period of projected benefit payments. The discount rate used to measure the City's total OPEB liability is based on these requirements and the following information:

Reporting Date	Measurement Date	Long-Term Expected Return of Plan Investments	Bond Buyer 20-Bond GO Index	Discount Rate
June 30, 2023	June 30, 2022	6.25%	3.54%	3.54%

The discount rate used to measure total OPEB liability for Governmental Activities and Sewer was 3.54%. The discount rate used to measure the total OPEB liability for GTrans was 6.25% percent.

Investment Policy

The City's policy regarding the allocation of the plan's invested assets is established and may be amended by City management. The City participates in the California Employers' Retiree Benefit Trust (CERBT), a Section 115 trust fund dedicated to prefunding Other Postemployment Benefits for all eligible California public agencies.

The City has adopted the CERBT Strategy 1 portfolio with an objective to seek returns that reflect the broad investment performance of the financial markets through capital appreciation and investment income. The portfolio is invested in various asset classes in percentages approved by the CalPERS Board.

Asset Class Component	Target Allocation	Expected Real Rate of Return	Benchmark
Global Equity	57.00%	+/-2%	MSCI All Country Would Index IMI (net)
Fixed Income	27.00%	+/-2%	Bloomberg Barclays Long Liability Index
Treasury Inflation-Protected Securities	5.00%	+/-2%	Bloomberg Barclays Barclays US TIPS Index
Real Estate Ivestment Trusts	8.00%	+/-2%	FTSE EPRA/NAREIT Developed Liquid Index (net)
Commodities	3.00%	+/-2%	S&P GSCI Total Return Index
Cash	0.00%	+2%	91 Day Treasury Bill
	100.00%		

Note 11 – Other Postemployment Benefits ("OPEB") (Continued)

Total OPEB Liability (Continued)

Long-Term Expected Rate of Return

The long-term expected rate of return on OPEB plan investments was determined using a building-block method in which expected future real rates of return (expected returns, net of investment expense and inflation) are developed for each major asset class. The calculated investment rate of return was set equal to the expected ten-year compound (geometric) real return plus inflation (rounded to the nearest 25 basis points, where appropriate). The table below provides the long-term expected real rates of return by asset class (based on published capital market assumptions). Change in Net OPEB Liability.

Asset Class	Assumed Asset Allocation	Real Rate of Return
Global ex-U.S. Equity	59.00%	4.80%
U.S. Fixed	25.00%	1.80%
TIPS	5.00%	1.60%
Real Estate	8.00%	3.70%
Commodities	3.00%	1.90%
	100.00%	

Rate of Return

For the year ended on the measurement date, the annual money-weighted rate of return on investments, net of investment expense, was -13.38 percent. The money-weighted rate of return expresses investment performance, net of investment expense, adjusted for the changing amounts invested.

Change in Net OPEB Liability

The following presents the changes in the net OPEB liability for the governmental activities' Retiree Health Plan:

	Increase (Decrease)		
	Total OPEB Liability (a)	**Fiduciary Net Position (b)**	**Net OPEB Liability (c) = (a) - (b)**
Balance at June 30, 2021	$ 76,481,166	$ 200,187	$ 76,280,979
Changes recognized for the measurement period:			
Service Cost	2,815,579	-	2,815,579
Interest on the total pension liability	1,688,245	-	1,688,245
Differences between expected and actual experience	303,548	-	303,548
Changes in assumptions and other inputs	(14,060,251)	-	(14,060,251)
Contributions - employer	-	2,286,676	(2,286,676)
Net investment income	-	(26,789)	26,789
Benefits payments	(2,286,676)	(2,286,676)	-
Administrative expenses	-	(51)	51
Net changes during July 1, 2021 to June 30, 2022	(11,539,555)	(26,840)	(11,512,715)
Balance at June 30, 2022 (Measurement Date)	$ 64,941,611	$ 173,347	$ 64,768,264

Note 11 – Other Postemployment Benefits ("OPEB") (Continued)

Change in Net OPEB Liability (Continued)

The following presents the changes in the net OPEB liability for the GTrans Enterprise's retiree OPEB Plan:

	Increase (Decrease)		
	Total Pension Liability (a)	Plan Fiduciary Net Position (b)	Net OPEB Liability (c) = (a) - (b)
Balance at June 30, 2021	$ 11,625,436	$ 5,713,012	$ 5,912,424
Changes recognized for the measurement period:			
Service cost	300,182	-	300,182
Interest on the total OPEB liability	718,462	-	718,462
Differences between expected and actual experience	1,378,033	-	1,378,033
Changes in assumptions	(475,092)	-	(475,092)
Contributions - employer	-	873,696	(873,696)
Net investment income	-	(764,412)	764,412
Benefit payments	(873,696)	(873,696)	-
Administrative expenses	-	(1,447)	1,447
Net changes during July 1, 2021 to June 30, 2022	1,047,889	(765,859)	1,813,748
Balance at June 30, 2022 (Measurement Date)	$ 12,673,325	$ 4,947,153	$ 7,726,172

The following presents the changes in the net OPEB liability for the Sewer Enterprise Fund (nonmajor):

	Increase (Decrease)		
	Total Pension Liability (a)	Plan Fiduciary Net Position (b)	Net OPEB Liability (c) = (a) - (b)
Balance at June 30, 2021	$ 536,098	$ -	$ 536,098
Changes recognized for the measurement period:			
Service Cost	32,554	-	32,554
Interest on the total OPEB liability	12,283	-	12,283
Differences between expected and actual experience	(214,606)	-	(214,606)
Changes in assumptions	(71,603)	-	(71,603)
Contributions - employer	-	-	-
Net investment income	-	-	-
Benefit payments	-	-	-
Administrative expenses	-	-	-
Net changes during July 1, 2021 to June 30, 2022	(241,372)	-	(241,372)
Balance at June 30, 2022 (Measurement Date)	$ 294,726	$ -	$ 294,726

Note 11 – Other Postemployment Benefits ("OPEB") (Continued)

Change in Net OPEB Liability (Continued)

Sensitivity of the net OPEB Liability to Changes in the Discount Rate

The following presents the net OPEB liability of the governmental activities and the Sewer's Retiree Health Plans, as well as what the governmental activities and the Sewer Enterprise's total OPEB liability would be if it were calculated using a discount rate that is 1-percentage-point lower (2.54 percent) or 1-percentage- point higher (4.54 percent) than the current discount rate:

	Plan's Net OPEB Liability		
	Discount Rate - 1% (2.54%)	Current Discount Rate (3.54%)	Discount Rate + 1% (4.54%)
Governmental Activities	$ 74,529,563	$ 64,768,264	$ 56,811,044
Sewer	$ 345,103	$ 294,726	$ 253,883

The following presents the net OPEB liability of the GTrans Enterprise Retiree Health Plan, as well as what the GTrans Enterprise Retiree Health Plan's total OPEB liability would be if it were calculated using a discount rate that is 1-percentage-point lower (5.25 percent) or 1-percentage- point higher (7.25 percent) than the current discount rate:

Plan's Net OPEB Liability		
Discount Rate - 1% (5.25%)	Current Discount Rate (6.25%)	Discount Rate + 1% (7.25%)
$ 9,418,573	$ 7,726,172	$ 6,324,936

OPEB Expense and Deferred Outflows of Resources and Deferred Inflows of Resources Related to OPEB

Sensitivity of the Net OPEB Liability to Changes in the Health Care Cost Trend Rates

The following presents the total OPEB liability of the City, GTrans, and Sewer, as well as what the City's, GTrans', and Sewer's total OPEB liability would be if it were calculated using healthcare cost trend rates that are 1-percentage-point lower or 1-percentage-point higher than the current healthcare cost trend rates:

	Plan's Net OPEB Liability		
	1% Decrease	Current Trend	1% Increase
Governmental Activities	$ 55,571,695	$ 64,768,264	$ 76,563,587
GTrans	$ 6,123,471	$ 7,726,172	$ 9,712,583
Sewer	$ 240,811	$ 294,726	$ 365,490

Note 11 – Other Postemployment Benefits ("OPEB") (Continued)

OPEB Expense and Deferred Outflows of Resources and Deferred Inflows of Resources Related to OPEB (Continued)

For the measurement period ended June 30, 2022, the governmental activities recognized expense of $2,914,204. At June 30, 2023, the City reported deferred outflows of resources and deferred inflows of resources related to governmental activities OPEB from the following sources:

	Deferred outflows of resources	Deferred inflows of resources
Difference between expected and actual experience	$ 885,249	$ (13,762,804)
Changes in assumptions	7,779,416	(1,205,353)
Net difference between projected and actual earnings on plan investments	13,084	-
Employer contributions made subsequent to the measurement date	4,966,034	-
Total	$ 13,643,783	$ (14,968,157)

For the measurement period ended June 30, 2022, GTrans recognized expense of $811,910. At June 30, 2023, the City reported deferred outflows of resources and deferred inflows of resources related to GTrans OPEB from the following sources:

	Deferred outflows of resources	Deferred inflows of resources
Difference between expected and actual experience	$ 1,325,250	$ (185,400)
Changes in assumptions	73,830	(554,016)
Net difference between projected and actual earnings on plan investments	386,621	-
Employer contributions made subsequent to the measurement date	724,778	-
Total	$ 2,510,479	$ (739,416)

For the measurement period ended June 30, 2022, Sewer recognized expense of $25,758. At June 30, 2023, the City reported deferred outflows of resources and deferred inflows of resources related to Sewer OPEB from the following sources:

	Deferred outflows of resources	Deferred inflows of resources
Difference between expected and actual experience	$ 12,020	$ (200,185)
Changes in assumptions	63,569	(85,860)
Employer contributions made subsequent to the measurement date	10,147	-
Total	$ 85,736	$ (286,045)

The difference between projected OPEB plan investment earnings and actual earnings is amortized over a five-year period. The remaining gains and losses are amortized over the expected average remaining service life. The expected average remaining service life is 7.8 years, 8.2 years, and 14.2 years for the governmental activities, the GTrans, and the Sewer, respectively, which was determined as of June 30, 2022, the beginning of the measurement period, for employees covered by the OPEB plan benefit terms.

Note 11 – Other Postemployment Benefits ("OPEB") (Continued)

OPEB Expense and Deferred Outflows of Resources and Deferred Inflows of Resources Related to OPEB (Continued)

$4,966,034, $724,778, and $10,147 reported as deferred outflows of resources related to OPEB under the governmental activities, GTrans, and Sewer, respectively resulting from the City's contributions subsequent to the measurement date will be recognized as a reduction of the net OPEB liability in the year ending June 30, 2024. Other amount reported as deferred inflows of resources related to OPEB will be recognized in the future OPEB expense as follows:

Measurement Periods Ended June 30	Deferred Outflows/(Inflows) of Resources		
	Governmental Activities	GTrans	Sewer
2023	$ (578,159)	$ 147,837	$ (16,079)
2024	(297,311)	143,094	(14,079)
2025	(49,412)	115,226	(14,079)
2026	(520,792)	311,828	(14,079)
2027	(1,670,111)	88,239	(16,449)
Thereafter	(3,174,623)	240,061	(135,691)
	$ (6,290,408)	$ 1,046,285	$ (210,456)

Note 12 – Deferred Compensation Plan

The City offers its employees a deferred compensation plan created in accordance with Internal Revenue Code Section 457. The plan, available to all City employees, permits them to defer a portion of their salaries until future years. The deferred compensation is not available to employees until termination, retirement, death or unforeseeable emergency. The plan assets are under the participants control and are principally invested in demand deposits and mutual funds and are held in trust for the exclusive benefit of the participants and their beneficiaries. The plan assets are not included in the accompanying financial statements. At June 30, 2023, the amount held by the Trustee for the City employees is $29,129,835.

Note 13 – Net Position and Fund Balances

A. Government-Wide Financial Statements

Net Investment in Capital Assets

The following is the calculation of net investment in capital assets at June 30, 2023:

	Governmental Activities	Business-Type Activities
Capital Assets, net of accumulated depreciation and amortization	$ 59,480,793	$ 60,259,791
Less: outstanding principal on capital related debt, net	(25,914,575)	(292,920)
Add: Unspent debt proceeds	11,752,150	-
Less: capital assets related accounts payable	(1,644,421)	(828,673)
Less: retention payable	(116,252)	-
Net investments in capital assets	$ 43,557,695	$ 59,138,198

Note 13 – Net Position and Fund Balances (Continued)

B. Fund Financial Statements

Fund Balance Classification:

At June 30, 2023, fund balances are classified in the governmental funds as follows:

	General Fund	Economic Development Grants Special Revenue Fund	City Capital Projects Fund	City Debt Service Fund	Nonmajor Governmental Funds	Total Governmental Funds
Nonspendable:						
Inventories	$ 42,815	$ -	$ -	$ -	$ -	$ 42,815
Prepaid items and deposits	284,591	-	-	291,500	19,597	595,688
Total nonspendable	327,406	-	-	291,500	19,597	638,503
Restricted:						
Economic development	-	6,715,432	-	-	-	6,715,432
Debt service	-	-	-	1,994,718	-	1,994,718
Law enforcement	-	-	-	-	752,261	752,261
Local street improvements	-	-	-	-	9,940,829	9,940,829
Community development	-	-	-	-	163,533	163,533
Capital projects	-	-	301,897	11,752,150	4,379,819	16,433,866
Other purposes	-	-	-	-	402,193	402,193
Total restricted	-	6,715,432	301,897	13,746,868	15,638,635	36,402,832
Committed:						
Emergency contingency	13,196,711	-	-	-	-	13,196,711
Senior and Aquatic Center Project	10,944,000	-	-	-	-	10,944,000
Pension stabilization fund	2,707,963	-	-	-	-	2,707,963
Total committed	26,848,674	-	-	-	-	26,848,674
Assigned:						
ERP and vehicle replacement	3,995,481	-	-	-	-	3,995,481
Equipment replacement	8,168,595	-	-	-	-	8,168,595
Future debt service payments	8,498,441	-	-	-	-	8,498,441
Benefit liability stabilization	2,000,000	-	-	-	-	2,000,000
Total assigned	22,662,517	-	-	-	-	22,662,517
Unassigned:	300,000	-	-	(289,149)	(57,980)	(47,129)
Total fund balance	$ 50,138,597	$ 6,715,432	$ 301,897	$ 13,749,219	$ 15,600,252	$ 86,505,397

Note 14 – Jointly Governed Organization

South Bay Regional Public Communications Authority

The City is a member of the South Bay Regional Public Communications Authority ("SBRPCA"), which provides financing and equipment for a police communications system for the City and the other member municipalities of SBRPCA - Hawthorne and Manhattan Beach. SBRPCA financial statements can be obtained from the SBRPCA at 4440 West Broadway, Hawthorne, California 90250.

Revenues, expenses and indebtedness incurred by the SBRPCA relating to services associated with central dispatch are divided by member agencies in accordance with set percentages; however, expenses incurred relating to specific equipment and services requested by an individual member agency for use by its own public safety services are paid entirely by that member agency. As of June 30, 2023, the City's percentage interest is 32.08%.

As of and for the year ended June 30, 2023, the latest available information, SBRPCA's audited financial information is as follows:

Total assets	$ 14,297,651
Total deferred outflows of resources	5,674,146
Total liabilities	12,659,596
Total deferred inflows of resources	2,123,049
Net position	$ 5,189,152
Total revenues	$ 13,196,777
Total expenses	(11,930,301)
Change in net position	$ 1,266,476

Note 15 – Commitments and Contingencies

The City participates in a number of federal and state assisted grant programs, which are subject to program compliance audits by the grantors or their representatives. Final closeout audits of these programs have not yet been completed. Accordingly, the City's ultimate compliance with applicable grant requirements will be established at some future date. Expenditures, if any, which may be disallowed by the granting agencies cannot be determined at this time, although the City expects such amounts, if any, to be immaterial.

The City is currently a party to various claims and legal proceedings. In management's opinion, the ultimate liabilities, if any, resulting from such claims and proceedings, will not materially affect the City's financial position.

The City had outstanding construction commitments in the amount of $35,243,250 as of June 30, 2023.

City of Gardena

Annual Comprehensive Financial Report
For the Year Ended June 30, 2023

(***This page is intentionally left blank)***

REQUIRED SUPPLEMENTARY INFORMATION (UNAUDITED)

City of Gardena

Annual Comprehensive Financial Report
For the Year Ended June 30, 2023

(This page is intentionally left blank)

City of Gardena
Required Supplementary Information (Unaudited)
Budgetary Comparison Schedule
For the Year Ended June 30, 2023

General Fund

	Original Budget	Final Budget	Actual	Variance with Final Budget
REVENUES:				
Taxes	$ 62,775,245	$ 62,775,245	$ 68,777,353	$ 6,002,108
Licenses and permits	1,875,038	1,875,038	2,158,749	283,711
Intergovernmental	532,500	532,500	689,683	157,183
Charges for services	5,407,723	5,407,723	5,659,983	252,260
Fines, forfeitures and penalties	1,185,368	1,185,368	927,536	(257,832)
Use of money and property	330,000	330,000	978,751	648,751
Miscellaneous	502,036	502,036	613,793	111,757
Total revenues	72,607,910	72,607,910	79,805,848	7,197,938
EXPENDITURES:				
Current:				
General government:				
City Clerk	555,370	555,370	501,569	53,801
City treasurer	301,534	301,534	278,342	23,192
Executive office	1,943,791	1,943,791	1,499,967	443,824
Administrative services	2,548,085	2,548,085	2,431,556	116,529
Non-departmental	1,015,399	1,015,399	1,488,894	(473,495)
Public safety:				
Police	30,237,239	30,507,239	29,755,809	751,430
L.A. County Fire District	12,854,048	12,584,048	12,254,572	329,476
Public works	6,634,386	6,634,386	6,887,999	(253,613)
Recreation and human services	4,216,629	4,216,629	4,005,992	210,637
Community development	2,618,308	2,618,308	2,620,660	(2,352)
Capital outlay	888,000	888,000	2,454,195	(1,566,195)
Debt service:				
Principal retirement	-	-	592,688	(592,688)
Interest and fiscal charges	-	-	32,659	(32,659)
Total expenditures	63,812,789	63,812,789	64,804,902	(992,113)
EXCESS OF REVENUES OVER (UNDER) EXPENDITURES	8,795,121	8,795,121	15,000,946	6,205,825
OTHER FINANCING SOURCES (USES):				
Transfers in	4,739,000	4,739,000	3,277,369	(1,461,631)
Transfers out	(10,291,664)	(10,291,664)	(11,044,788)	(753,124)
Proceed from sale of assets	10,000	10,000	31,153	21,153
Proceeds from debt issuance	-	-	1,048,143	1,048,143
Total other financing sources (uses)	(5,542,664)	(5,542,664)	(6,688,123)	(1,145,459)
NET CHANGE IN FUND BALANCE	$ 3,252,457	$ 3,252,457	8,312,823	$ 5,060,366
FUND BALANCE:				
Beginning of Year			41,825,774	
End of Year			$ 50,138,597	

City of Gardena
Required Supplementary Information (Unaudited)
Budgetary Comparison Schedule (Continued)
For the Year Ended June 30, 2023

Economic Development Grants Special Revenue Fund

	Original Budget	Final Budget	Actual	Variance with Final Budget
REVENUES:				
Intergovernmental	$ 3,050,280	$ 3,050,280	$ 275,975	$ (2,774,305)
Charges for services	-	-	64,000	64,000
Fines, forfeitures and penalties	200,000	200,000	270,000	70,000
Use of money and property	20,000	20,000	94,535	74,535
Miscellaneous	-	-	54	54
Total revenues	3,270,280	3,270,280	704,564	(2,565,716)
EXPENDITURES:				
Current:				
Community development	1,340,280	1,340,280	183,002	1,157,278
Total expenditures	1,340,280	1,340,280	183,002	1,157,278
EXCESS OF REVENUES OVER (UNDER) EXPENDITURES	1,930,000	1,930,000	521,562	(1,408,438)
OTHER FINANCINGSOURCES (USES):				
Transfers in	(3,054,730)	-	1,729	1,729
Transfers out	(3,054,730)	(3,054,730)	(310,525)	2,744,205
Total other financing sources (uses)	(3,054,730)	(3,054,730)	(308,796)	2,745,934
NET CHANGE IN FUND BALANCE	$ (1,124,730)	$ (1,124,730)	212,766	$ 1,337,496
FUND BALANCE:				
Beginning of Year			6,502,666	
End of Year			$ 6,715,432	

City of Gardena
Required Supplementary Information (Unaudited)
Notes to the Budgetary Comparison Schedule
For the Year Ended June 30, 2023

Note 1 - Budgetary Control and Accounting Policy

The City adopts annual budgets for the General Fund, special revenue funds, and debt service funds as well as adopts project length budgets for projects within the City Capital Projects Fund. During the year ended June 30, 2023, the City did not adopt a budget for the Asset Forfeiture Special Revenue Fund.

The City's budget is a detailed operating plan, which identifies estimated costs and results in relation to estimated revenues. The budget includes (1) the programs, projects, services, and activities to be provided during the fiscal year, (2) the estimated resources (inflows) and amounts available for appropriation and (3) the estimated charges to appropriations (outflows). The budget represents a process through which policy decisions are made, implemented, and controlled. The City's policy prohibits expending funds for which there is no legal appropriation.

The City's procedures for preparing the budgetary data reflected in the financial statements are:

- The budget is prepared under the City Manager's direction and adopted by the City Council, generally prior to June 30 of each year. It is revised periodically during the year by the City Council. The budget presented in the financial statements includes the original and final amounts.

- The budget serves as a policy document for the deliverance of public services; however, expenditures are individually approved by the City Council. The City Manager is authorized to transfer amounts within individual fund budgets without the approval of City Council. Additional appropriations during the year may be submitted to the City Council for review and approval.

- Budget information is presented for the governmental fund types. Budgeted revenue amounts represent the original budget modified by Council-authorized adjustments during the year, which were contingent upon new, or additional revenue sources. Budgeted expenditure amounts represent original appropriations adjusted for supplemental appropriations during the year.

- Total expenditures of each governmental fund may not legally exceed fund appropriations, and total expenditures for each department (for example: police department, public works department, community development department, etc.) may not legally exceed departmental appropriations. The City does not employ encumbrance accounting. The budgets conform, in all material respects, to U.S. GAAP.

- Appropriations lapse at year-end to the extent they have not been expended, except for capital projects appropriations which lapse when individual projects are completed.

City of Gardena
Required Supplementary Information (Unaudited)
Schedule of Changes in Net Pension Liability and Related Ratios
For the Year Ended June 30, 2023

Last Ten Fiscal Years

California Public Employees' Retirement System ("CalPERS") - Miscellaneous Plan

Measurement period	2013-14[1]	2014-15	2015-16	2016-17	2017-18
Total pension liability					
Service cost	$ 2,713,029	$ 2,672,238	$ 2,740,901	$ 3,129,118	$ 3,173,762
Interest	9,625,167	10,024,136	10,454,955	10,781,297	11,153,035
Changes of benefit terms	-	-	-	-	-
Changes of assumptions	-	(2,344,195)	-	8,715,907	(778,396)
Differences between expected and actual experience	-	(500,092)	(36,375)	(553,030)	122,851
Benefit payments, including refunds of employee contributions	(6,617,452)	(6,931,772)	(7,193,626)	(7,669,492)	(8,486,647)
Net change in total pension liability	5,720,744	2,920,315	5,965,855	14,403,800	5,184,605
Total pension liability - beginning	130,287,771	136,008,515	138,928,830	144,894,685	159,298,485
Total pension liability - ending (a)	$ 136,008,515	$ 138,928,830	$ 144,894,685	$ 159,298,485	$ 164,483,090
Pension fiduciary net position					
Contributions - employer	$ 1,628,415	$ 2,016,919	$ 2,317,060	$ 2,645,234	$ 3,015,630
Contributions - employee	1,181,161	1,242,246	1,321,368	1,327,795	1,405,045
Net investment income	17,430,461	2,536,012	604,797	12,260,577	10,029,125
Benefit payments, including refunds of employee contributions	(6,617,452)	(6,931,772)	(7,193,626)	(7,669,492)	(8,486,647)
Net plan to plan resource movement	-	-	(1,234)	11,249	(291)
Administrative expense	-	(128,654)	(69,658)	(164,291)	(186,505)
Other miscellaneous income/ (expense)[2]	-	-	-	-	(354,176)
Net change in plan fiduciary net position	13,622,585	(1,265,249)	(3,021,293)	8,411,072	5,422,181
Plan fiduciary net position - beginning[3]	101,939,625	115,562,210	114,296,961	111,275,668	119,686,740
Plan fiduciary net position - ending (b)	$ 115,562,210	$ 114,296,961	$ 111,275,668	$ 119,686,740	$ 125,108,921
Plan net pension liability - ending (a) - (b)	$ 20,446,305	$ 24,631,869	$ 33,619,017	$ 39,611,745	$ 39,374,169
Plan fiduciary net position as a percentage of the total pension liability	84.97%	82.27%	76.80%	75.13%	76.06%
Covered payroll	$ 17,651,457	$ 18,094,788	$ 19,012,911	$ 19,306,012	$ 19,929,430
Plan net pension liability as a percentage of covered payroll	115.83%	136.13%	176.82%	205.18%	197.57%

[1] Historical information is presented only for measurement periods for periods after GASB 68 implementation in 2013-14. Additional years of information will be displayed as it becomes available.

[2] During Fiscal Year 2017-18, as a result of Governmental Accounting Standards Board Statement (GASB) No. 75, Accounting and Financial Reporting for Postemployment Benefit Plans Other than Pensions (GASB 75), CalPERS reported its proportionate share of activity related to postemployment benefits for participation in the State of California's agent OPEB plan. Accordingly, CalPERS recorded a one-time expense as a result of the adoption of GASB 75. Additionally, CalPERS employees participate in various State of California agent pension plans and during Fiscal Year 2017-18, CalPERS recorded a correction to previously reported financial statements to properly reflect its proportionate share of activity related to pensions in accordance with GASB Statement No. 68, Accounting and Financial Reporting for Pensions (GASB 68).

[3] Includ es o ne year's payroll growth using 2.80% payroll growth assumption for fiscal year ended June 30, 2022; 2.75% payroll growth assumption for fiscal years ended June 30, 2018-21; 3.00% payroll growth assumption for fiscal years ended June 30, 2014-17.

Notes to Schedule:

Benefit Changes: The figures above generally include any liability impact that may have resulted from voluntary benefit changes that occurre d on or before the Measurement Date. However, offers of Two Years Additional Service Credit (a.k.a. Golden Handshakes) that occurred after the Valuation Date are not included in the figures above, unless the liability impact is deemed to be material by the plan actuary.

Changes of Assumptions: Effective with the June 30, 2021 valuation date (2022 measurement date), the accounting discount rate was reduced from 7.15% to 6.90%. In determining the long-term expected rate of return, CalPERS took into account long-term market return expectations as well as the expected pension fund cash flows. Projected returns for all asset classes are estimated, combined with risk estimates, and are used to project comp ound (geometric) returns over the long term. The discount rate used to discount liabilities was informed by the long-term projected portfolio return. In addition, demographic assumptions and the inflation rate assumption were changed in accordance with the 2021 CalPERS Experience Study and Review of Actuarial Assumptions. The ac counting discount rate was 7.15% for measurement dates 2017 through 2021, 7.65% for measurement dates 2015 through 2016, and 7.50% for measurement date 2014.

City of Gardena
Required Supplementary Information (Unaudited)
Schedule of Changes in Net Pension Liability and Related Ratios (Continued)
For the Year Ended June 30, 2023

Last Ten Fiscal Years

California Public Employees' Retirement System ("CalPERS") - Miscellaneous Plan (Continued)

Measurement period	2018-19	2019-2020	2020-2021	2021-2022
Total pension liability				
Service cost	$ 3,162,100	$ 3,329,543	$ 3,190,091	$ 3,211,338
Interest	11,820,982	12,201,071	12,451,995	12,420,366
Changes of benefit terms	-	-	-	-
Changes of assumptions	-	-	-	5,350,605
Differences between expected and actual experience	3,672,690	(593,300)	(1,841,509)	(4,506,679)
Benefit payments, including refunds of employee contributions	(8,816,825)	(9,498,332)	(10,721,565)	(10,568,643)
Net change in total pension liability	9,838,947	5,438,982	3,079,012	5,906,987
Total pension liability - beginning	164,483,090	174,322,037	179,761,019	182,840,031
Total pension liability - ending (a)	$ 174,322,037	$ 179,761,019	$ 182,840,031	$ 188,747,018
Pension fiduciary net position				
Contributions - employer	$ 3,688,807	$ 4,397,533	$ 46,940,155	$ 2,100,703
Contributions - employee	1,457,546	1,611,737	1,203,298	1,242,880
Net investment income	8,130,102	6,417,192	35,069,162	(15,201,569)
Benefit payments, including refunds of employee contributions	(8,816,825)	(9,498,332)	(10,721,565)	(10,568,643)
Net plan to plan resource movement	-	-	-	-
Administrative expense	(89,280)	(182,534)	(132,085)	(127,444)
Other miscellaneous income/ (expense)[2]	291	-	-	-
Net change in plan fiduciary net position	4,370,641	2,745,596	72,358,965	(22,554,073)
Plan fiduciary net position - beginning[3]	125,108,921	129,479,562	132,225,158	204,584,123
Plan fiduciary net position - ending (b)	$ 129,479,562	$ 132,225,158	$ 204,584,123	$ 182,030,050
Plan net pension liability - ending (a) - (b)	$ 44,842,475	$ 47,535,861	$ (21,744,092)	$ 6,716,968
Plan fiduciary net position as a percentage of the total pension liability	74.28%	73.56%	111.89%	96.44%
Covered payroll[1]	$ 20,102,352	$ 21,343,226	$ 20,567,963	$ 18,319,096
Plan net pension liability as a percentage of covered payroll	223.07%	222.72%	-105.72%	36.67%

City of Gardena
Required Supplementary Information (Unaudited)
Schedule of the City's Proportionate Share of the Net Pension Liability and Related Ratios
For the Year Ended June 30, 2023

Last Ten Fiscal Years

California Public Employees' Retirement System ("CalPERS") - Safety Plan

Measurement period	June 30, 2014[1]	June 30, 2015	June 30, 2016	June 30, 2017	June 30, 2018
City Proportion of the Net Pension Liability	0.65549%	0.65832%	0.62924%	0.61206%	0.62701%
City's Proportionate Share of the net Pension Liability	$ 40,787,661	$ 45,186,413	$ 54,448,433	$ 60,699,742	$ 60,419,894
City's Covered Payroll	$ 9,078,779	$ 9,351,143	$ 10,491,839	$ 10,435,515	$ 11,232,919
City's Proportionate Share of the Net Pension Liability as a Percentage of Its Covered Payroll	449.26%	483.22%	518.96%	581.67%	537.88%
Plan's Proportionate Share of the Fiduciary Net Position as a Percentage of the Total Pension Liability	75.54%	77.40%	68.79%	68.27%	69.50%

[1] Historical information is presented only for measurement periods for periods after GASB 68 implementation in 2013-14. Additional years of information will be displayed as it becomes available.

City of Gardena
Required Supplementary Information (Unaudited)
Schedule of the City's Proportionate Share of the Net Pension Liability and Related Ratios (Continued)
For the Year Ended June 30, 2023

Last Ten Fiscal Years

California Public Employees' Retirement System ("CalPERS") - Safety Plan (Continued)

Measurement period	June 30, 2019	June 30, 2020	June 30, 2021	June 30, 2022
City Proportion of the Net Pension Liability	0.55899%	0.56472%	-0.50839%	0.10940%
City's Proportionate Share of the net Pension Liability	$ 57,280,320	$ 61,443,923	$ (27,495,287)	$ 12,636,888
City's Covered Payroll	$ 12,156,428	$ 11,992,232	$ 11,768,395	$ 12,233,930
City's Proportionate Share of the Net Pension Liability as a Percentage of Its Covered Payroll	471.19%	512.36%	-233.64%	103.29%
Plan's Proportionate Share of the Fiduciary Net Position as a Percentage of the Total Pension Liability	72.58%	72.05%	111.98%	94.86%

City of Gardena
Required Supplementary Information (Unaudited)
Schedule of Contributions - Pensions
For the Year Ended June 30, 2023

Last Ten Fiscal Years

California Public Employees' Retirement System ("CalPERS") - Miscellaneous Plan

	2013-14	2014-15	2015-16	2016-17	2017-18
Actuarially determined contribution	$ 1,628,415	$ 2,016,919	$ 2,317,060	$ 2,645,234	$ 3,015,630
Contributions in relation to the actuarially determined contribution[1]	(1,628,415)	(2,016,919)	(2,317,060)	(2,645,234)	(3,015,630)
Contribution deficiency (excess)	$ -	$ -	$ -	$ -	$ -
Covered payroll[2]	$ 17,651,457	$ 18,094,788	$ 19,012,911	$ 19,306,012	$ 19,929,430
Contributions as a percentage of covered payroll[2]	9.23%	11.15%	12.19%	13.70%	15.13%

[1] Employers are assumed to make contributions equal to the actuarially determined contributions. However, some employers may choose to make additional contributions towards their unfunded liability. Employer contributions for such plans exceed the actuarially determined contributions.

[2] Include es o ne year's payroll growth using 2.80% payroll growth assumption for fiscal year ended June 30, 2022; 2.75% payroll growth assumption for fiscal years ended June 30, 2018-21; 3.00% payroll growth assumption for fiscal years ended June 30, 2014-17.

Notes to Schedule:

The actuarial methods and assumptions used to set the actuarially determined contributions for Fiscal Year 2021-22 were derived from the June 30, 2019 funding valuation report.

Methods and assumptions used to determine contribution rates:

Actuarial cost method	Entry Age Normal Cost Method
Amortization method	Level percentage of payroll
Asset valuation method	Fair value
Inflation	2.50%
Salary increases	Varies by entry age and service
Payroll Growth	2.750%
Investment rate of return	7.00% net of pension plan investment and administrative expenses; includes Inflation.
Retirement age	The probabilities of retirement are based on the 2017 CalPERS Experience study for the period from 1997 to 2015.
Mortality	The probabilities of mortality are based on the 2017 CalPERS Experience Study for the period from 1997 to 2015. Pre-retirement and Post-retirement mortality rates include 15 years of projected mortality improvement using 90% of Scale MP-2016 published by the Society of Actuaries.

City of Gardena
Required Supplementary Information (Unaudited) (Continued)
Schedule of Contributions - Pensions (Continued)
For the Year Ended June 30, 2023

Last Ten Fiscal Years

California Public Employees' Retirement System ("CalPERS") - Miscellaneous Plan (Continued)

	2018-19	2019-20	2020-21[3]	2021-22	2022-23
Actuarially determined contribution	$ 3,688,807	$ 4,397,533	$ 4,625,188	$ 2,100,703	$ 1,935,000
Contributions in relation to the actuarially determined contribution[1]	(3,688,807)	(4,397,533)	(46,940,155)	(2,100,703)	(1,935,000)
Contribution deficiency (excess)	$ -	$ -	$ (42,314,967)	$ -	$ -
Covered payroll[2]	$ 20,102,352	$ 21,343,226	$ 20,567,963	$ 18,319,096	$ 18,832,031
Contributions as a percentage of covered payroll[2]	18.35%	20.60%	228.22%	11.47%	10.28%

[3] During FY2020-21, the City contributed $42,022,534 additional funds to CalPERS via proceeds of the 2020 Taxable Pension Obligation Bonds.

City of Gardena
Required Supplementary Information (Unaudited)
Schedule of Contributions - Pensions (Continued)
For the Year Ended June 30, 2023

Last Ten Fiscal Years

California Public Employees' Retirement System ("CalPERS") - Safety Plan

	2013-14	2014-15	2015-16	2016-17	2017-18
Actuarially determined contribution	$ 3,930,218	$ 4,265,350	$ 4,917,350	$ 5,401,275	$ 6,093,811
Contributions in relation to the actuarially determined contribution	(3,930,218)	(4,265,350)	(4,917,350)	(5,401,275)	(6,093,811)
Contribution deficiency (excess)	$ -	$ -	$ -	$ -	$ -
Covered payroll [1]	$ 9,078,779	$ 9,351,143	$ 10,491,839	$ 10,435,515	$ 11,232,919
Contributions as a percentage of covered payroll	43.29%	45.61%	46.87%	51.76%	54.25%

[1] Payroll from 2021-22 was assumed to increase by the 2.8 percent payroll growth assumption.

Notes to Schedule:

Change in Benefit Terms: There was no change in benefit terms.

Changes of Assumptions: Effective with the June 30, 2021 valuation date (2022 measurement date), the accounting discount rate was reduced from 7.15% to 6.90%. In determining the long-term expected rate of return, CalPERS took into account long-term market return expectations as well as the expected pension fund cash flows. Projected returns for all asset classes are estimated, combined with risk estimates, and are used to project comp ound (geometric) returns over the long term. The discount rate used to discount liabilities was informed by the long-term projected portfolio return. In addition, demographic assumptions and the inflation rate assumption were changed in accordance with the 2021 CalPERS Experience Study and Review of Actuarial Assumptions. The ac counting discount rate was 7.15% for measurement dates 2017 through 2021, 7.65% for measurement dates 2015 through 2016, and 7.50% for measurement date 2014. None in 2019-2021. In 2018, demographic assumptions and inflation rate were changed in accordance to the CalPERS Experience Study and Review of Assumptions December 2017. There were no changes in the discount rate. In 2017, the discount rate was reduced from 7.65 percent to 7.15 percent. In 2016, there were no changes. In 2015, amounts reported reflect an adjustment of the discount rate from 7.5 percent (net of administrative expense) to 7.65 percent (without a reduction for pension plan administrative expense). In 2014, amounts reported were based on the 7.5 percent discount rate.

City of Gardena
Required Supplementary Information (Unaudited)
Schedule of Contributions - Pensions (Continued)
For the Year Ended June 30, 2023

Last Ten Fiscal Years

California Public Employees' Retirement System ("CalPERS") - Safety Plan (Continued)

	2018-19 [2]	2019-20	2020-21 [3]	2021-22	2022-23
Actuarially determined contribution	$ 6,617,559	$ 6,185,808	$ 8,595,603	$ 2,950,604	$ 3,126,759
Contributions in relation to the actuarially determined contribution[3]	(12,677,559)	(6,185,808)	(60,369,859)	(2,950,604)	(3,126,759)
Contribution deficiency (excess)	$ (6,060,000)	$ -	$ (51,774,256)	$ -	$ -
Covered payroll	$ 12,156,428	$ 11,992,232	$ 11,768,395	$ 12,233,930	$ 12,576,480
Contributions as a percentage of covered payroll	104.29%	51.58%	512.98%	24.12%	24.86%

[2] During FY2018-19, the City contributed $6,060,000 to CalPERS to proceed with the 20 year fresh start of the unfunded liability to the safety plan.

[3] During FY2020-21, the City contributed $51,774,256 additional funds to CalPERS via proceeds of the 2020 Taxable Pension Obligation Bonds.

City of Gardena
Required Supplementary Information (Unaudited)
Schedule of Changes in Net OPEB Liability and Related Ratios
For the Year Ended June 30, 2023

Last Ten Fiscal Years

Governmental Activities Retiree Healthcare Plan

Measurement period	2016-17[1]	2017-18	2018-19	2019-20	2020-21
Total OPEB liability					
Service cost	$ 2,001,000	$ 1,619,506	$ 1,649,332	$ 1,902,932	$ 2,450,797
Transfers to Sewer	-	(288,000)	-	-	-
Interest	1,888,000	2,141,404	2,284,925	2,265,606	1,663,721
Changes of benefit terms	-	-	-	-	-
Changes of assumptions	(7,755,000)	(4,569,074)	3,665,059	10,099,593	654,965
Differences between expected and actual experience	-	2,253,827	-	(2,109,370)	-
Benefit payments, including refunds	(2,162,000)	(2,247,465)	(2,251,080)	(2,075,527)	(2,237,985)
Other - funding rates used by benefits paid	580,000	-	-	-	-
Net change in total OPEB liability	(5,448,000)	(1,089,802)	5,348,236	10,083,234	2,531,498
Total OPEB liability - beginning of the year	65,056,000	59,608,000	58,518,198	63,866,434	73,949,668
Total OPEB liability - end of the year (a)	$ 59,608,000	$ 58,518,198	$ 63,866,434	$ 73,949,668	$ 76,481,166
OPEB fiduciary net position					
Contributions - employer	$ -	$ 2,247,465	$ 2,401,080	$ 2,075,527	$ 2,237,985
Contributions - employee	-	-	-	-	-
Net investment income	-	-	1,792	5,361	43,168
Benefit payments, including refunds	-	(2,247,465)	(2,251,080)	(2,075,527)	(2,237,985)
Administrative expense	-	-	(1)	(74)	(59)
Other changes	-	-	-	-	-
Net change in plan fiduciary net position	-	-	151,791	5,287	43,109
Plan fiduciary net position - beginning of year	-	-	-	151,791	157,078
Plan fiduciary net position - end of year (b)	$ -	$ -	$ 151,791	$ 157,078	$ 200,187
Plan net OPEB liability - end of year (a) - (b)	$ 59,608,000	$ 58,518,198	$ 63,714,643	$ 73,792,590	$ 76,280,979
Plan fiduciary net position as a percentage of the total OPEB liability	0.00%	0.00%	0.24%	0.21%	0.26%
Covered employee payroll	$ 25,500,000	$ 23,523,270	$ 24,650,894	$ 25,558,730	$ 22,948,265
Plan net OPEB liability as a percentage of covered employee payroll	233.76%	248.77%	258.47%	288.72%	332.40%

[1] Historical information is presented for measurement periods after GASB 75 implementation in 2016-17. Additional years' information will be displayed as it becomes available.

Notes to Schedule:

Changes of assumptions: In 2022, the accounting discount rate increase from 2.16 percent to 3.54 percent. In addition, the demographic assumptions and the inflation rate assumption were changed in accordance with the 2002-2019 CalPERS Experience Study and Review of Actuarial Assumptions In 2021, the accounting discount rate decrease from 2.21 percent to 2.16 percent. In 2020, the accounting discount rate decreased from 3.50 percent to 2.21 percent. In 2019, the accounting discount rate increased from 3.87 percent to 3.50 percent. In 2018, the accounting discount rate increased from 3.58 percent to 3.87 percent. In 2017, the accounting discount rate increased from 2.85 percent to 3.58 percent.

Changes of benefit terms: There were no changes of benefit terms in 2022.

City of Gardena
Required Supplementary Information (Unaudited)
Schedule of Changes in Net OPEB Liability and Related Ratios (Continued)
For the Year Ended June 30, 2023

Last Ten Fiscal Years

Governmental Activities Retiree Healthcare Plan (Continued)

Measurement period	2021-22
Total OPEB liability	
Service cost	$ 2,815,579
Transfers to Sewer	-
Interest	1,688,245
Changes of benefit terms	-
Changes of assumptions	(14,060,251)
Differences between expected and actual experience	303,548
Benefit payments, including refunds	(2,286,676)
Other - funding rates used by benefits paid	-
Net change in total OPEB liability	(11,539,555)
Total OPEB liability - beginning of the year	76,481,166
Total OPEB liability - end of the year (a)	$ 64,941,611
OPEB fiduciary net position	
Contributions - employer	$ 2,286,676
Contributions - employee	-
Net investment income	(26,789)
Benefit payments, including refunds	(2,286,676)
Administrative expense	(51)
Other changes	-
Net change in plan fiduciary net position	(26,840)
Plan fiduciary net position - beginning of year	200,187
Plan fiduciary net position - end of year (b)	$ 173,347
Plan net OPEB liability - end of year (a) - (b)	$ 64,768,264
Plan fiduciary net position as a percentage of the total OPEB liability	0.27%
Covered employee payroll[c]	$ 24,154,486
Plan net OPEB liability as a percentage of covered employee payroll	268.14%

[1] Historical information is presented for measurement periods after GASB 75 implementation in 2016-17. Additional years' information will be displayed as it becomes available.

Notes to Schedule:

Changes of assumptions: In 2022, the accounting discount rate increase from 2.16 percent to 3.54 percent. In addition, the demographic assumptions and the inflation rate assumption were changed in accordance with the 2002-2019 CalPERS Experience Study and Review of Actuarial Assumptions In 2021, the accounting discount rate decrease from 2.21 percent to 2.16 percent. In 2020, the accounting discount rate decreased from 3.50 percent to 2.21 percent. In 2019, the accounting discount rate increased from 3.87 percent to 3.50 percent. In 2018, the accounting discount rate increased from 3.58 percent to 3.87 percent. In 2017, the accounting discount rate increased from 2.85 percent to 3.58 percent.

Changes of benefit terms: There were no changes of benefit terms in 2022.

City of Gardena
Required Supplementary Information (Unaudited)
Schedule of Changes in Net OPEB Liability and Related Ratios (Continued)
For the Year Ended June 30, 2023

Last Ten Fiscal Years

GTrans Retiree Healthcare Plan

Measurement period	2016-17[1]	2017-18	2018-19	2019-20	2020-21
Total OPEB liability					
Service cost	$ 232,000	$ 238,960	$ 291,129	$ 299,863	$ 340,578
Interest	598,000	629,344	661,199	706,976	691,860
Changes of benefit terms	-	-	-	-	-
Changes of assumptions	-	(357,602)	-	117,261	-
Differences between expected and actual experience	-	301,185	-	(294,459)	-
Benefit payments, including refunds	(462,000)	(494,701)	(289,528)	(276,271)	(272,358)
Other - funding rates used by benefits paid	190,000	-	-	-	-
Net change in total OPEB liability	558,000	317,186	662,800	553,370	760,080
Total OPEB liability - beginning of year	8,774,000	9,332,000	9,649,186	10,311,986	10,865,356
Total OPEB liability - end of year (a)	$ 9,332,000	$ 9,649,186	$ 10,311,986	$ 10,865,356	$ 11,625,436
OPEB fiduciary net position					
Contributions - employer	$ 462,000	$ 4,516,245	$ 289,528	$ 276,271	$ 272,358
Contributions - employee	-	-	-	-	-
Net investment income	-	60,118	251,747	152,987	1,231,806
Benefit payments, including refunds	(462,000)	(494,701)	(289,528)	(276,271)	(272,358)
Administrative expense	-	(505)	(874)	(2,115)	(1,696)
Other changes	-	-	-	-	-
Net change in plan fiduciary net position	-	4,081,157	250,873	150,872	1,230,110
Plan fiduciary net position - beginning of year	-	-	4,081,157	4,332,030	4,482,902
Plan fiduciary net position - end of year (b)	$ -	$ 4,081,157	$ 4,332,030	$ 4,482,902	$ 5,713,012
Plan net OPEB liability - end of year (a) - (b)	$ 9,332,000	$ 5,568,029	$ 5,979,956	$ 6,382,454	$ 5,912,424
Plan fiduciary net position as a percentage of the total OPEB liability	0.00%	42.30%	42.01%	41.26%	49.14%
Covered employee payroll	$ 9,759,000	$ 10,316,000	$ 9,798,690	$ 10,811,701	$ 8,791,518
Plan net OPEB liability as a percentage of covered employee payroll	95.62%	53.97%	61.03%	59.03%	67.25%

[1] Historical information is presented only for measurement periods after GASB 75 implementation in 2016-17.

Notes to Schedule:

Changes of assumptions: In 2022, there were no changes in discount rate; however, the demographic assumptions and the inflation rate assumption were changed in accordance with the 2002-2019 CalPERS Experience Study and Review of Actuarial Assumptions In 2020, the discount rate changed from 6.75 percent to 6.25 percent and the inflation assumption was changed from 2.75 percent per year to 2.50 percent. In 2019, There were no changes in assumptions. In 2018, medical plan at retirement assumption updated, trend rate updated, demographic assumptions were updated to CalPERS 1997-2015 Experience Study, and mortality improvement scale was updated to Scale MP-2018. In 2017, there were no changes.

Changes of benefit terms: There were no changes of benefit terms in 2022.

City of Gardena
Required Supplementary Information (Unaudited)
Schedule of Changes in Net OPEB Liability and Related Ratios (Continued)
For the Year Ended June 30, 2023

Last Ten Fiscal Years

GTrans Retiree Healthcare Plan (Continued)

Measurement period	2021-22
Total OPEB liability	
Service cost	$ 300,182
Interest	718,462
Changes of benefit terms	(873,696)
Changes of assumptions	(475,092)
Differences between expected and actual experience	1,378,033
Benefit payments, including refunds	-
Other - funding rates used by benefits paid	-
Net change in total OPEB liability	1,047,889
Total OPEB liability - beginning of year	11,625,436
Total OPEB liability - end of year (a)	$ 12,673,325
OPEB fiduciary net position	
Contributions - employer	$ 873,696
Contributions - employee	-
Net investment income	357,018
Benefit payments, including refunds	(873,696)
Administrative expense	(1,447)
Other changes	(1,121,430)
Net change in plan fiduciary net position	(765,859)
Plan fiduciary net position - beginning of year	5,713,012
Plan fiduciary net position - end of year (b)	$ 4,947,153
Plan net OPEB liability - end of year (a) - (b)	$ 7,726,172
Plan fiduciary net position as a percentage of the total OPEB liability	39.04%
Covered employee payroll	$ 10,652,412
Plan net OPEB liability as a percentage of covered employee payroll	72.53%

[1] Historical information is presented only for measurement periods after GASB 75 implementation in 2016-17.

Notes to Schedule:

Changes of assumptions: In 2022, there were no changes in discount rate; however, the demographic assumptions and the inflation rate assumption were changed in accordance with the 2002-2019 CalPERS Experience Study and Review of Actuarial Assumptions In 2020, the discount rate changed from 6.75 percent to 6.25 percent and the inflation assumption was changed from 2.75 percent per year to 2.50 percent. In 2019, There were no changes in assumptions. In 2018, medical plan at retirement assumption updated, trend rate updated, demographic assumptions were updated to CalPERS 1997-2015 Experience Study, and mortality improvement scale was updated to Scale MP-2018. In 2017, there were no changes.

Changes of benefit terms: There were no changes of benefit terms in 2022.

City of Gardena
Required Supplementary Information (Unaudited)
Schedule of Changes in Net OPEB Liability and Related Ratios (Continued)
For the Year Ended June 30, 2023

Last Ten Fiscal Years

Sewer Retiree Healthcare Plan

Measurement period	2016-17[1]	2017-18	2018-19	2019-20	2020-21
Total OPEB liability					
Service cost	$ -	$ 16,001	$ 19,620	$ 22,199	$ 73,740
Transfers from the Governmental Activities	-	288,000	-	-	-
Interest	-	10,883	11,678	12,351	11,482
Changes of benefit terms	-	-	-	-	-
Changes of assumptions	-	(32,020)	17,238	64,526	5,084
Differences between expected and actual experience	-	(709)	-	16,025	-
Benefit payments, including refunds	-	-	-	-	-
Other - funding rates used by benefits paid	-	-	-	-	-
Net change in total OPEB liability	-	282,155	48,536	115,101	90,306
Total OPEB liability - beginning of year	-	-	282,155	330,691	445,792
Total OPEB liability - end of year (a)	$ -	$ 282,155	$ 330,691	$ 445,792	$ 536,098
OPEB fiduciary net position					
Contributions - employer	$ -	$ -	$ -	$ -	$ -
Contributions - employee	-	-	-	-	-
Net investment income	-	-	-	-	-
Benefit payments, including refunds	-	-	-	-	-
Administrative expense	-	-	-	-	-
Other changes	-	-	-	-	-
Net change in plan fiduciary net position	-	-	-	-	-
Plan fiduciary net position - beginning of year	-	-	-	-	-
Plan fiduciary net position - end of year (b)	$ -	$ -	$ -	$ -	$ -
Plan net OPEB liability - end of year (a) - (b)	$ -	$ 282,155	$ 330,691	$ 445,792	$ 536,098
Plan fiduciary net position as a percentage of the total OPEB liability	0.00%	0.00%	0.00%	0.00%	0.00%
Covered employee payroll	N/A	$ 388,821	$ 482,665	$ 515,111	$ 497,972
Plan net OPEB liability as a percentage of covered employee payroll	N/A	72.57%	68.51%	86.54%	107.66%

[1] Historical information is presented only for measurement periods after GASB 75 implementation in 2016-17.

Notes to Schedule:

Changes of assumptions: In 2022, the accounting discount rate increase from 2.16 percent to 3.54 percent. In 2020, the accounting discount rate decrease from 2.21 percent to 2.16 percent. In 2020, the accounting discount rate decreased from 3.50 percent to 2.21 percent. In 2019, the accounting discount rate increased from 3.87 percent to 3.50 percent. In 2018, the accounting discount rate increased from 3.58 percent to 3.87 percent. In 2017, the accounting discount rate increased from 2.85 percent to 3.58 percent.

Changes of benefit terms: There were no changes of benefit terms in 2022.

City of Gardena
Required Supplementary Information (Unaudited)
Schedule of Changes in Net OPEB Liability and Related Ratios (Continued)
For the Year Ended June 30, 2023

Last Ten Fiscal Years

Sewer Retiree Healthcare Plan (Continued)

Measurement period	2021-22
Total OPEB liability	
Service cost	$ 32,554
Transfers from the Governmental Activities	-
Interest	12,283
Changes of benefit terms	-
Changes of assumptions	(71,603)
Differences between expected and actual experience	(214,606)
Benefit payments, including refunds	-
Other - funding rates used by benefits paid	-
Net change in total OPEB liability	(241,372)
Total OPEB liability - beginning of year	536,098
Total OPEB liability - end of year (a)	$ 294,726
OPEB fiduciary net position	
Contributions - employer	$ -
Contributions - employee	-
Net investment income	-
Benefit payments, including refunds	-
Administrative expense	-
Other changes	-
Net change in plan fiduciary net position	-
Plan fiduciary net position - beginning of year	-
Plan fiduciary net position - end of year (b)	$ -
Plan net OPEB liability - end of year (a) - (b)	$ 294,726
Plan fiduciary net position as a percentage of the total OPEB liability	0.00%
Covered employee payroll	$ 386,209
Plan net OPEB liability as a percentage of covered employee payroll	76.31%

[1] Historical information is presented only for measurement periods after GASB 75 implementation in 2016-17.

Notes to Schedule:

Changes of assumptions: In 2022, the accounting discount rate increase from 2.16 percent to 3.54 percent. In 2020, the accounting discount rate decrease from 2.21 percent to 2.16 percent. In 2020, the accounting discount rate decreased from 3.50 percent to 2.21 percent. In 2019, the accounting discount rate increased from 3.87 percent to 3.50 percent. In 2018, the accounting discount rate increased from 3.58 percent to 3.87 percent. In 2017, the accounting discount rate increased from 2.85 percent to 3.58 percent.

Changes of benefit terms: There were no changes of benefit terms in 2022.

City of Gardena
Required Supplementary Information (Unaudited)
Schedule of Contributions - Other Postemployment Benefits Plans
For the Year Ended June 30, 2023

Last Ten Fiscal Years

Governmental Activities Retiree Healthcare Plan

	2016-17[1]	2017-18	2018-19	2019-20	2020-21
Actuarially determined contribution	$ 5,029,000	N/A	$ 3,631,000	$ 3,867,000	$ 3,941,000
Contributions in relation to the actuarially determined contribution	(2,162,000)	(2,247,465)	(2,557,088)	(2,075,527)	(2,237,985)
Contribution deficiency (excess)	$ 2,867,000	$ (2,247,465)	$ 1,073,912	$ 1,791,473	$ 1,703,015
Covered employee payroll	N/A	$ 23,523,270	$ 24,650,894	$ 25,558,730	$ 22,948,265
Contributions as a percentage of covered employee payroll	N/A	N/A	10.37%	8.12%	9.75%

[1] Historical information is presented only for measurement periods after GASB 75 implementation in 2016-17.

Notes to Schedule:

The actuarial methods and assumptions used to set the actuarially determined contributions for Fiscal Year 2022-23 were derived from the June 30, 2022 funding valuation report.

Methods and assumptions used to determine contribution rates:

Actuarial cost method	Entry Age Normal, Level % of pay
Discount rate:	Level % of pay
Long-term expected return	6.25%
Municipal bond index	3.54%
GASB 75	3.54%
Salary increases	2.75%
Withdrawal	Miscellaneous - Terminated Refund and Terminated Vested Rates for Public Agency Miscellaneous from CalPERS Experience Study (2000-2019). Safety - Terminated Refund and Terminated Vested Rates for Public Agency Police from CalPERS Experience Study (2000-2019).
Pre-retirement mortality	Miscellaneous - Preretirement Mortality Rates for Public Agency Miscellaneous from CalPERS Experience Study (2000-2019). Safety - Preretirement Mortality Rates for Public Agency Police and Fire from CalPERS Experience Study (2000-2019).
Postretirement mortality	Miscellaneous - Post-retirement Mortality Rates for Public Agency Miscellaneous from CalPERS Experience Study (2000-2019). Safety - Post-retirement Mortality Rates for Public Agency Police and Fire from CalPERS Experience Study (2000-2019).
Retirement	Miscellaneous - Classic - Service Retirement Rates for Public Agency Miscellaneous—2.00% at 55—from CalPERS Experience Study (2000-2019). Miscellaneous - PEPRA - Service Retirement Rates for Public Agency Miscellaneous—2.00% at 62—from CalPERS Experience Study (2000-2019). Police - Classic - Service Retirement Rates for Public Agency Police—3.00% at 50—CalPERS Experience Study (2000-2019). Police - PEPRA - Service Retirement Rates for Public Agency Police—2.70% at 57—CalPERS Experience Study (2000-2019).
Medical trend	Pre-Medicare - 6.5% for 2022, decreasing on an ultimate rate of 4.00% in 2070+ Medicare City Plan - 6.0% for 2022, decreasing on an ultimate rate of 4.00% in 2070+ Medicare Kaiser - 4.5% for 2022, decreasing on an ultimate rate of 4.00% in 2070+

City of Gardena
Required Supplementary Information (Unaudited)
Schedule of Contributions - Other Postemployment Benefits Plans (Continued)
For the Year Ended June 30, 2023

Last Ten Fiscal Years

Governmental Activities Retiree Healthcare Plan (Continued)

	2021-22	2022-23
Actuarially determined contribution	$ 4,211,000	$ 5,012,263
Contributions in relation to the actuarially determined contribution	(2,286,676)	(4,966,034)
Contribution deficiency (excess)	$ 1,924,324	$ 46,229
Covered employee payroll	$ 24,154,486	$ 24,818,734
Contributions as a percentage of covered employee payroll	9.47%	20.01%

City of Gardena
Required Supplementary Information (Unaudited)
Schedule of Contributions - Other Postemployment Benefits Plans (Continued)
For the Year Ended June 30, 2023

Last Ten Fiscal Years

GTrans Retiree Healthcare Plan

	2016-17[1]	2017-18	2018-19	2019-20	2020-21
Actuarially determined contribution	$ 848,000	$ 785,000	$ 721,000	$ 776,000	$ 848,000
Contributions in relation to the actuarially determined contribution	(462,000)	(4,516,544)	(532,056)	(276,271)	(272,358)
Contribution deficiency (excess)	$ 386,000	$ (3,731,544)	$ 188,944	$ 499,729	$ 575,642
Covered employee payroll	$ 9,759,000	$ 10,316,000	$ 9,798,690	$ 10,811,701	$ 8,791,518
Contributions as a percentage of covered employee payroll	4.73%	43.78%	5.43%	2.56%	3.10%

[1] Historical information is presented only for measurement periods after GASB 75 implementation in 2016-17.

Notes to Schedule:

The actuarial methods and assumptions used to set the actuarially determined contributions for Fiscal Year 2022-23 were derived from the June 30, 2022 funding valuation report.

Methods and assumptions used to determine contribution rates:

Actuarial cost method	Entry Age Normal, Level % of pay
Discount rate:	Level % of pay
Long-term expected return	6.25%
Municipal bond index	3.54%
GASB 75	6.25%
Salary increases	2.75%
Withdrawal	Miscellaneous - Terminated Refund and Terminated Vested Rates for Public Agency Miscellaneous from CalPERS Experience Study (2000-2019).
Pre-retirement mortality	Miscellaneous - Preretirement Mortality Rates for Public Agency Miscellaneous from CalPERS Experience Study (2000-2019).
Postretirement mortality	Miscellaneous - Post-retirement Mortality Rates for Public Agency Miscellaneous from CalPERS Experience Study (2000-2019).
Retirement	Miscellaneous - Classic - Service Retirement Rates for Public Agency Miscellaneous—2.00% at 55—from CalPERS Experience Study (2000-2019). Miscellaneous - PEPRA - Service Retirement Rates for Public Agency Miscellaneous—2.00% at 62—from CalPERS Experience Study (2000-2019).

City of Gardena
Required Supplementary Information (Unaudited)
Schedule of Contributions - Other Postemployment Benefits Plans (Continued)
For the Year Ended June 30, 2023

Last Ten Fiscal Years

GTrans Retiree Healthcare Plan (Continued)

	2021-22	2022-23
Actuarially determined contribution	$ 899,000	$ 954,864
Contributions in relation to the actuarially determined contribution	(873,696)	(724,778)
Contribution deficiency (excess)	$ 25,304	$ 230,086
Covered employee payroll	$ 10,484,293	$ 10,954,353
Contributions as a percentage of covered employee payroll	8.33%	6.62%

City of Gardena
Required Supplementary Information (Unaudited)
Schedule of Contributions - Other Postemployment Benefits Plans (Continued)
For the Year Ended June 30, 2023

Last Ten Fiscal Years

Sewer Retiree Healthcare Plan

	2016-17[1]	2017-18	2018-19	2019-20	2020-21
Actuarially determined contribution	$ -	$ -	$ 25,000	$ 26,000	$ 46,000
Contributions in relation to the actuarially determined contribution	-	-	-	-	-
Contribution deficiency (excess)	$ -	$ -	$ 25,000	$ 26,000	$ 46,000
Covered employee payroll	N/A	$ 388,821	$ 482,665	$ 515,111	$ 497,972
Contributions as a percentage of covered employee payroll	N/A	N/A	0.00%	0.00%	0.00%

[1] Historical information is presented only for measurement periods after GASB 75 implementation in 2016-17.

Notes to Schedule:

The actuarial methods and assumptions used to set the actuarially determined contributions for Fiscal Year 2022-23 were derived from the June 30, 2022 funding valuation report.

Methods and assumptions used to determine contribution rates:

Actuarial cost method	Entry Age Normal, Level % of pay
Discount rate:	Level % of pay
Long-term expected return	6.25%
Municipal bond index	3.54%
GASB 75	3.54%
Salary increases	2.75%
Withdrawal	Miscellaneous - Terminated Refund and Terminated Vested Rates for Public Agency Miscellaneous from CalPERS Experience Study (2000-2019). Safety - Terminated Refund and Terminated Vested Rates for Public Agency Police from CalPERS Experience Study (2000-2019).
Pre-retirement mortality	Miscellaneous - Preretirement Mortality Rates for Public Agency Miscellaneous from CalPERS Experience Study (2000-2019). Safety - Preretirement Mortality Rates for Public Agency Police and Fire from CalPERS Experience Study (2000-2019).
Postretirement mortality	Miscellaneous - Post-retirement Mortality Rates for Public Agency Miscellaneous from CalPERS Experience Study (2000-2019). Safety - Post-retirement Mortality Rates for Public Agency Police and Fire from CalPERS Experience Study (2000-2019).
Retirement	Miscellaneous - Classic - Service Retirement Rates for Public Agency Miscellaneous—2.00% at 55—from CalPERS Experience Study (2000-2019). Miscellaneous - PEPRA - Service Retirement Rates for Public Agency Miscellaneous—2.00% at 62—from CalPERS Experience Study (2000-2019). Police - Classic - Service Retirement Rates for Public Agency Police—3.00% at 50—CalPERS Experience Study (2000-2019). Police - PEPRA - Service Retirement Rates for Public Agency Police—2.70% at 57—CalPERS Experience Study (2000-2019).

City of Gardena
Required Supplementary Information (Unaudited)
Schedule of Contributions - Other Postemployment Benefits Plans (Continued)
For the Year Ended June 30, 2023

Last Ten Fiscal Years

Sewer Retiree Healthcare Plan (Continued)

	2021-22	2022-23
Actuarially determined contribution	$ 48,000	$ 32,004
Contributions in relation to the actuarially determined contribution	-	(10,147)
Contribution deficiency (excess)	$ 48,000	$ 21,857
Covered employee payroll	$ 386,578	$ 397,209
Contributions as a percentage of covered employee payroll	0.00%	2.55%

City of Gardena

Annual Comprehensive Financial Report
For the Year Ended June 30, 2023

(This page is intentionally left blank)

SUPPLEMENTARY INFORMATION

City of Gardena

Annual Comprehensive Financial Report
For the Year Ended June 30, 2023

(This page is intentionally left blank)

City of Gardena
Schedule of Revenues, Expenditures, and Changes in Fund Balance - Budget and Actual
City Capital Projects Fund
For the Year Ended June 30, 2023

	Original Budget	Final Budget	Actual	Variance with Final Budget
EXPENDITURES:				
Capital outlay	$ 40,504,947	$ 41,688,130	$ 6,345,749	$ 35,342,381
Total expenditures	40,504,947	41,688,130	6,345,749	35,342,381
OTHER FINANCING SOURCES:				
Transfers in	40,504,947	41,688,130	6,345,749	(35,342,381)
Total other financing sources	40,504,947	41,688,130	6,345,749	(35,342,381)
NET CHANGE IN FUND BALANCE	$ -	$ -	-	$ -
FUND BALANCE:				
Beginning of year			301,897	
End of year			$ 301,897	

City of Gardena

Annual Comprehensive Financial Report
For the Year Ended June 30, 2023

(This page is intentionally left blank)

NONMAJOR GOVERNMENTAL FUNDS

Consolidated Lighting District Special Revenue Fund **-** To account for monies received from property assessments restricted to fund district lighting activities.

Prop C Local Return Special Revenue Fund **-** To account for monies derived from Los Angeles County 1/2% sales tax, received from MTA and expended on streets and roads heavily used by public transit.

Gas Tax Special Revenue Fund **-** To account for funding from the State of California for the state and county gas tax allocation and the Senate Bill No. 1 (SB1) allocation.

Asset Forfeiture Special Revenue Fund **-** To account for monies that were seized from criminal activities and is to be used solely for law enforcement purposes.

Public Safety Grants Special Revenue Fund **-** Represents twenty-two funds used to fund various police activities. Four of the grants receive funding from the California Office of Traffic Safety. These grants fund sobriety checkpoints, saturation patrols, seatbelt enforcement, warrant/probation sweeps and additional activities to raise public awareness and reduce alcohol involved fatalities. Two grants from the U.S. Department of Justice provides funding for technological programs and equipment to improve public safety issues. One grant from Board of State and Community Corrections (“BSCC”) for establishing officer wellness units and support. Finally, The COPS grant and Traffic Safety grant are funds earmarked for any police activity that will increase public safety. The Federal Emergency Management Agency (“FEMA”) Coronavirus Pandemic Public Assistance Program provides support to meet emergency needs during the COVID-19 pandemic. The State Homeland Security Grant Program (“HSGP”) provides funding to prevent terrorism and other catastrophic events and to prepare local governments for the threats and hazards that pose the greatest risk to the security of the community.

Public Works Grants Special Revenue Fund **-** Represents fourteenth funds used to implement various capital improvements projects. The Artesia Boulevard Landscaping Assessment is received from property assessments and restricted to funding district landscaping activities. Several funds to account for various grants received from the California Department of Transportation or Caltrans to implement programs that promote pedestrian friendly areas, street and signal improvements. The Measure Proposition A Park Bond Safe neighborhood Parks Proposition of 1992 and 1996 is received from Los Angeles County Regional Park and Open Space District to be used for acquisition and improvements to parks. The South Coast AQMD fund is monies received from the motor vehicle tax to be expended on programs to reduce air pollution, which is necessary to comply with the California Clean Air Act of 1988. Measure R & Measure M funds are derived from Los Angeles County 1/2 cent sales tax approved by voters to meet the transportation needs of Los Angeles County. The program is to be used for transportation projects that have been approved by the Los Angeles County Metropolitan Transportation Authority ("MTA"). The Measure W fund is derived from Los Angeles County 2.5 cents parcel tax approved by voters in November 2018 to increase local water supply, improve water quality, and protect public health. This fund is use for Municipal Separate Storm Sewer System (“MS4”) programs and projects. Proposition 68 Fund to account for grant monies received from the Statewide Park Development and Community Revitalization Program (“SPP”) to create new parks and recreation opportunities in underserved communities.

Human Services Grants Special Revenue Fund **-** Represents seven funds. Two of the funds provide meals to the elderly and disabled funded by Aging Program. These meals are served at the Nakaoka Center or delivered directly to the participants. One grant provides for a socialization program for elderly persons suffering from Alzheimer's Disease or dementia. The two Family Child Care grants are funded by the California Department of Education Social Services (“CDSS”) and provides daycare and early education to qualified families. Once fund to account for the Los Angeles County Measure H Homeless grant to provide homeless prevention and referral services.

Community Development Block Grant (CDBG) Special Revenue Fund **-** To account for funding from HUD to fund programs that benefit low income, elderly or disabled individuals. A number of programs are funded with these monies, including an at-risk youth program, code enforcement, a handy worker program for small home repairs and access ramps, projects to improve or eliminate slum blight conditions, as well as assistance for landlords in designated areas to improve living conditions for qualified tenants.

American Rescue Plan Special Revenue Fund **-** To account for revenues and activities for American Rescue Plan Act funding which was provided to fund additional relief for individuals and businesses affected by the coronavirus pandemic.

City of Gardena
Combining Balance Sheet
Nonmajor Governmental Funds
June 30, 2023

	Special Revenue Funds			
	Consolidated Lighting District	Prop C Local Return	Gas Tax	Asset Forfeiture
ASSETS				
Cash and investments	$ 731,524	$ 3,981,659	$ 4,899,333	$ 752,261
Receivables:				
Accounts	-	-	374,611	-
Taxes	17,637	-	133,666	-
Prepaid items and deposits	-	-	4,803	-
Due from other governmental agencies	-	-	-	-
Total assets	$ 749,161	$ 3,981,659	$ 5,412,413	$ 752,261
LIABILITIES, DEFERRED INFLOWS OF RESOURCES AND FUND BALANCES				
Liabilities:				
Accounts payable	$ 52,211	$ -	$ 65,195	$ -
Accrued liabilities	-	-	-	-
Salaries and benefits payable	-	530	1,553	-
Due to other funds	-	-	78,112	-
Retention payable	-	-	-	-
Unearned revenue	-	-	-	-
Total liabilities	52,211	530	144,860	-
Deferred inflows of resources:				
Unavailable revenue	-	-	-	-
Total deferred inflows of resources	-	-	-	-
Fund Balances:				
Nonspendable	-	-	4,803	-
Restricted	696,950	3,981,129	5,262,750	752,261
Unassigned (deficit)	-	-	-	-
Total fund balances	696,950	3,981,129	5,267,553	752,261
Total liabilities, deferred inflows of resources, and fund balances	$ 749,161	$ 3,981,659	$ 5,412,413	$ 752,261

(Continued)

City of Gardena
Combining Balance Sheet (Continued)
Nonmajor Governmental Funds
June 30, 2023

	Special Revenue Funds			
	Public Safety Grants	Public Works Grants	Human Services Grants	Community Development Block Grant (CDBG)
ASSETS				
Cash and investments	$ 598,157	$ 4,761,665	$ 964,687	$ 162,316
Receivables:				
Accounts	699,080	-	102,340	1,217
Taxes	-	-	-	-
Prepaid items and deposits	-	12,610	2,184	-
Due from other governmental agencies	28,854	1,353,362	225,123	33,444
Total assets	$ 1,326,091	$ 6,127,637	$ 1,294,334	$ 196,977
LIABILITIES, DEFERRED INFLOWS OF RESOURCES AND FUND BALANCES				
Liabilities:				
Accounts payable	$ 5,295	$ 25,897	$ 479,241	$ -
Accrued liabilities	-	-	3,046	-
Salaries and benefits payable	-	1,532	19,344	-
Due to other funds	716,538	1,222,168	270,103	33,444
Retention payable	-	-	-	-
Unearned revenue	-	-	-	-
Total liabilities	721,833	1,249,597	771,734	33,444
Deferred inflows of resources:				
Unavailable revenue	662,238	485,611	118,223	-
Total deferred inflows of resources	662,238	485,611	118,223	-
Fund Balances:				
Nonspendable	-	12,610	2,184	-
Restricted	-	4,379,819	402,193	163,533
Unassigned (deficit)	(57,980)	-	-	-
Total fund balances	(57,980)	4,392,429	404,377	163,533
Total liabilities, deferred inflows of resources, and fund balances	$ 1,326,091	$ 6,127,637	$ 1,294,334	$ 196,977

(Continued)

City of Gardena
Combining Balance Sheet (Continued)
Nonmajor Governmental Funds
June 30, 2023

	Special Revenue Fund	
	American Rescue Plan	Total Nonmajor Governmental Funds
ASSETS		
Cash and investments	$ 3,053,186	$ 19,904,788
Receivables:		
Accounts	-	1,177,248
Taxes	-	151,303
Prepaid items and deposits	-	19,597
Due from other governmental agencies	-	1,640,783
Total assets	$ 3,053,186	$ 22,893,719
LIABILITIES, DEFERRED INFLOWS OF RESOURCES AND FUND BALANCES		
Liabilities:		
Accounts payable	$ -	$ 627,839
Accrued liabilities	-	3,046
Salaries and benefits payable	-	22,959
Due to other funds	-	2,320,365
Retention payable	-	-
Unearned revenue	3,053,186	3,053,186
Total liabilities	3,053,186	6,027,395
Deferred inflows of resources:		
Unavailable revenue	-	1,266,072
Total deferred inflows of resources	-	1,266,072
Fund Balances:		
Nonspendable	-	19,597
Restricted	-	15,638,635
Unassigned (deficit)	-	(57,980)
Total fund balances	-	15,600,252
Total liabilities, deferred inflows of resources, and fund balances	$ 3,053,186	$ 22,893,719

(Concluded)

City of Gardena
Combining Statement of Revenues, Expenditures, and Changes in Fund Balances
Nonmajor Governmental Funds
For the Year Ended June 30, 2023

	Special Revenue Funds			
	Consolidated Lighting District	Prop C Local Return	Gas Tax	Asset Forfeiture
REVENUES:				
Taxes	$ 823,039	$ 2,424,138	$ -	$ -
Intergovernmental	-	-	3,066,942	-
Fines, forfeitures, and penalties	-	-	-	-
Use of money and property	12,331	80,886	86,373	14,094
Miscellaneous	-	-	42,412	-
Total revenues	835,370	2,505,024	3,195,727	14,094
EXPENDITURES:				
Current:				
General government	-	-	7,823	-
Public safety	-	-	-	13,712
Public works	636,162	34,534	597,910	-
Recreation and human services	-	-	-	-
Community development	-	-	-	-
Capital outlay	-	-	-	-
Debt service:				
Principal retirement	14,296	-	19,606	-
Interest and fiscal charges	-	-	-	-
Total expenditures	650,458	34,534	625,339	13,712
EXCESS OF REVENUES OVER (UNDER) EXPENDITURES	184,912	2,470,490	2,570,388	382
OTHER FINANCING SOURCES (USES):				
Proceeds from sale of assets	-	-	-	-
Transfers in	-	-	-	-
Transfers out	(67,636)	(1,890,382)	(711,685)	-
Total other financing sources (uses)	(67,636)	(1,890,382)	(711,685)	-
NET CHANGES IN FUND BALANCES	117,276	580,108	1,858,703	382
FUND BALANCES (DEFICIT):				
Beginning of year	579,674	3,401,021	3,408,850	751,879
End of year	$ 696,950	$ 3,981,129	$ 5,267,553	$ 752,261

(Continued)

City of Gardena
Combining Statement of Revenues, Expenditures, and Changes in Fund Balances (Continued)
Nonmajor Governmental Funds
For the Year Ended June 30, 2023

	Special Revenue Funds			
	Public Safety Grants	Public Works Grants	Human Services Grants	Community Development Block Grant (CDBG)
REVENUES:				
Taxes	$ -	$ 2,223,008	$ -	$ -
Intergovernmental	466,363	2,840,205	3,961,472	67,722
Fines, forfeitures, and penalties	37,878	-	-	-
Use of money and property	11,810	93,668	19,197	1,558
Miscellaneous	-	8,969	55,082	-
Total revenues	516,051	5,165,850	4,035,751	69,280
EXPENDITURES:				
Current:				
General government	-	-	-	-
Public safety	303,884	-	-	-
Public works	-	279,392	-	-
Recreation and human services	-	17,910	4,197,788	-
Community development	-	-	-	33,446
Capital outlay	-	6,898	10,000	-
Debt service:				
Principal retirement	4,463	21,990	10,147	-
Interest and fiscal charges	-	2,270	5	-
Total expenditures	308,347	328,460	4,217,940	33,446
EXCESS OF REVENUES OVER (UNDER) EXPENDITURES	207,704	4,837,390	(182,189)	35,834
OTHER FINANCING SOURCES (USES):				
Proceeds from sale of assets	-	2,940	-	-
Transfers in	2,881	7,973	258,959	51,681
Transfers out	(96,462)	(3,668,837)	(100,548)	-
Total other financing sources (uses)	(93,581)	(3,657,924)	158,411	51,681
NET CHANGES IN FUND BALANCES	114,123	1,179,466	(23,778)	87,515
FUND BALANCES (DEFICIT):				
Beginning of year	(172,103)	3,212,963	428,155	76,018
End of year	$ (57,980)	$ 4,392,429	$ 404,377	$ 163,533

(Continued)

City of Gardena
Combining Statement of Revenues, Expenditures, and Changes in Fund Balances (Continued)
Nonmajor Governmental Funds
For the Year Ended June 30, 2023

	Special Revenue Fund	
	American Rescue Plan	Total Nonmajor Governmental Funds
REVENUES:		
Taxes	$ -	$ 5,470,185
Intergovernmental	897,621	11,300,325
Fines, forfeitures, and penalties	-	37,878
Use of money and property	71,674	391,591
Miscellaneous	-	106,463
Total revenues	969,295	17,306,442
EXPENDITURES:		
Current:		
General government	-	7,823
Public safety	-	317,596
Public works	-	1,547,998
Recreation and human services	-	4,215,698
Community development	-	33,446
Capital outlay	-	16,898
Debt service:		
Principal retirement	-	70,502
Interest and fiscal charges	-	2,275
Total expenditures	-	6,212,236
EXCESS OF REVENUES OVER (UNDER) EXPENDITURES	969,295	11,094,206
OTHER FINANCING SOURCES (USES):		
Proceeds from sale of assets	-	2,940
Transfers in	-	321,494
Transfers out	(969,295)	(7,504,845)
Total other financing sources (uses)	(969,295)	(7,180,411)
NET CHANGES IN FUND BALANCES	-	3,913,795
FUND BALANCES (DEFICIT):		
Beginning of year	-	11,686,457
End of year	$ -	$ 15,600,252

(Concluded)

City of Gardena
Schedule of Revenues, Expenditures, and Changes in Fund Balance - Budget and Actual
Consolidated Lighting District Special Revenue Fund
For the Year Ended June 30, 2023

	Original Budget	Final Budget	Actual	Variance with Final Budget
REVENUES:				
Taxes	$ 836,545	$ 836,545	$ 823,039	$ (13,506)
Use of money and property	2,500	2,500	12,331	9,831
Total revenues	839,045	839,045	835,370	(3,675)
EXPENDITURES:				
Current:				
Public works	774,749	774,749	636,162	138,587
Debt service:				
Principal retirement	14,296	14,296	14,296	-
Total expenditures	789,045	789,045	650,458	138,587
EXCESS OF REVENUES OVER EXPENDITURES	50,000	50,000	184,912	134,912
OTHER FINANCING USES:				
Transfers out	(300,000)	(300,000)	(67,636)	232,364
Total other financing uses	(300,000)	(300,000)	(67,636)	232,364
NET CHANGE IN FUND BALANCE	$ (250,000)	$ (250,000)	117,276	$ 367,276
FUND BALANCE:				
Beginning of year			579,674	
End of year			$ 696,950	

City of Gardena
Schedule of Revenues, Expenditures, and Changes in Fund Balance - Budget and Actual
Prop C Local Return Special Revenue Fund
For the Year Ended June 30, 2023

	Original Budget	Final Budget	Actual	Variance with Final Budget
REVENUES:				
Taxes	$ 1,221,151	$ 1,221,151	$ 2,424,138	$ 1,202,987
Use of money and property	20,000	20,000	80,886	60,886
Total revenues	1,241,151	1,241,151	2,505,024	1,263,873
EXPENDITURES:				
Current:				
Public works	37,947	37,947	34,534	3,413
Total expenditures	37,947	37,947	34,534	3,413
EXCESS OF REVENUES OVER EXPENDITURES	1,203,204	1,203,204	2,470,490	1,267,286
OTHER FINANCING USES:				
Transfers out	(4,050,000)	(4,720,000)	(1,890,382)	2,829,618
Total other financing uses	(4,050,000)	(4,720,000)	(1,890,382)	2,829,618
NET CHANGE IN FUND BALANCE	$ (2,846,796)	$ (3,516,796)	580,108	$ 4,096,904
FUND BALANCE:				
Beginning of year			3,401,021	
End of year			$ 3,981,129	

City of Gardena
Schedule of Revenues, Expenditures, and Changes in Fund Balance - Budget and Actual
Gas Tax Special Revenue Fund
For the Year Ended June 30, 2023

	Original Budget	Final Budget	Actual	Variance with Final Budget
REVENUES:				
Intergovernmental	$ 3,176,857	$ 3,176,857	$ 3,066,942	$ (109,915)
Use of money and property		-	86,373	86,373
Miscellanous	27,500	27,500	42,412	14,912
Total revenues	3,204,357	3,204,357	3,195,727	(8,630)
EXPENDITURES:				
Current:				
General government	15,140	15,140	7,823	7,317
Public works	565,660	565,660	597,910	(32,250)
Debt service:				
Principal retirement	-	-	19,606	(19,606)
Total expenditures	580,800	580,800	625,339	(44,539)
EXCESS OF REVENUES OVER EXPENDITURES	2,623,557	2,623,557	2,570,388	(53,169)
OTHER FINANCING USES:				
Transfers out	(5,664,047)	(5,687,230)	(711,685)	4,975,545
Total other financing uses	(5,664,047)	(5,687,230)	(711,685)	4,975,545
NET CHANGE IN FUND BALANCE	$ (3,040,490)	$ (3,063,673)	1,858,703	$ 4,922,376
FUND BALANCE:				
Beginning of year			3,408,850	
End of year			$ 5,267,553	

City of Gardena
Schedule of Revenues, Expenditures, and Changes in Fund Balance - Budget and Actual
Public Safety Grants Special Revenue Fund
For the Year Ended June 30, 2023

	Original Budget	Final Budget	Actual	Variance with Final Budget
REVENUES:				
Intergovernmental	$ 276,126	$ 276,126	$ 466,363	$ 190,237
Fines, forfeitures, and penalties	75,000	75,000	37,878	(37,122)
Use of money and property	500	500	11,810	11,310
Total revenues	351,626	351,626	516,051	164,425
EXPENDITURES:				
Current:				
Public safety	276,126	276,126	303,884	(27,758)
Debt service:				
Principal retirement	-	-	4,463	(4,463)
Total expenditures	276,126	276,126	308,347	(32,221)
EXCESS OF REVENUES OVER (UNDER) EXPENDITURES	75,500	75,500	207,704	132,204
OTHER FINANCING SOURCES (USES):				
Transfers in	-	-	2,881	2,881
Transfers out	(75,500)	(75,500)	(96,462)	(20,962)
Total other financing (sources) uses	(75,500)	(75,500)	(93,581)	(18,081)
NET CHANGE IN FUND BALANCE	$ -	$ -	114,123	$ 114,123
FUND BALANCE (DEFICIT):				
Beginning of year			(172,103)	
End of year			$ (57,980)	

City of Gardena
Schedule of Revenues, Expenditures, and Changes in Fund Balance - Budget and Actual
Public Works Grants Special Revenue Fund
For the Year Ended June 30, 2023

	Original Budget	Final Budget	Actual	Variance with Final Budget
REVENUES:				
Taxes	$ 2,055,503	$ 2,055,503	$ 2,223,008	$ 167,505
Intergovernmental	17,487,170	17,487,170	2,840,205	(14,646,965)
Use of money and property	23,000	23,000	93,668	70,668
Miscellaneous	-	-	8,969	8,969
Total revenues	19,565,673	19,565,673	5,165,850	(14,399,823)
EXPENDITURES:				
Current:				
Public works	675,077	643,359	279,392	363,967
Recreation and human services	10,000	10,000	17,910	(7,910)
Capital outlay	31,836	31,836	6,898	24,938
Debt service:				
Principal retirement	-	26,825	21,990	4,835
Interest and fiscal charges	-	4,893	2,270	2,623
Total expenditures	716,913	716,913	328,460	388,453
EXCESS OF REVENUES OVER (UNDER) EXPENDITURES	18,848,760	18,848,760	4,837,390	(14,011,370)
OTHER FINANCING USES:				
Proceeds from sale of assets	-	-	2,940	2,940
Transfers in	-	-	7,973	7,973
Transfers out	(19,990,670)	(20,480,670)	(3,668,837)	16,811,833
Total other financing uses	(19,990,670)	(20,480,670)	(3,657,924)	16,822,746
NET CHANGE IN FUND BALANCE	$ (1,141,910)	$ (1,631,910)	1,179,466	$ 2,811,376
FUND BALANCE:				
Beginning of year			3,212,963	
End of year			$ 4,392,429	

City of Gardena
Schedule of Revenues, Expenditures, and Changes in Fund Balance - Budget and Actual
Human Services Grants Special Revenue Fund
For the Year Ended June 30, 2023

	Original Budget	Final Budget	Actual	Variance with Final Budget
REVENUES:				
Intergovernmental	$ 4,284,052	$ 4,284,052	$ 3,961,472	$ (322,580)
Use of money and property	4,000	4,000	19,197	15,197
Miscellaneous	31,000	31,000	55,082	24,082
Total revenues	4,319,052	4,319,052	4,035,751	(283,301)
EXPENDITURES:				
Current:				
Recreation and human services	4,354,917	4,350,174	4,197,788	152,386
Capital Outlay		-	10,000	(10,000)
Debt service:				
Principal retirement	-	4,346	10,147	(5,801)
Interest and fiscal charges	-	397	5	392
Total expenditures	4,354,917	4,354,917	4,217,940	136,977
EXCESS OF REVENUES OVER (UNDER) EXPENDITURES	(35,865)	(35,865)	(182,189)	(146,324)
OTHER FINANCING SOURCES:				
Transfers in	30,255	30,255	258,959	228,704
Transfers out	30,255	-	(100,548)	(100,548)
Total other financing sources	30,255	30,255	158,411	128,156
NET CHANGE IN FUND BALANCE	$ (5,610)	$ (5,610)	(23,778)	$ (18,168)
FUND BALANCE:				
Beginning of year			428,155	
End of year			$ 404,377	

City of Gardena
Schedule of Revenues, Expenditures, and Changes in Fund Balance - Budget and Actual
Community Development Block Grant (CDBG) Special Revenue Fund
For the Year Ended June 30, 2023

	Original Budget	Final Budget	Actual	Variance with Final Budget
REVENUES:				
Intergovernmental	$ 980,001	$ 980,001	$ 67,722	$ (912,279)
Use of money and property	-	-	1,558	1,558
Total revenues	980,001	980,001	69,280	(910,721)
EXPENDITURES:				
Current:				
Community development	980,001	980,001	33,446	946,555
Total expenditures	980,001	980,001	33,446	946,555
EXCESS OF REVENUES OVER (UNDER) EXPENDITURES	-	-	35,834	35,834
OTHER FINANCING SOURCES (USES):				
Transfers in	-	-	51,681	51,681
Transfers out	-	-	-	-
Total other financing sources (uses)	-	-	51,681	51,681
NET CHANGE IN FUND BALANCE	$ -	$ -	87,515	$ 87,515
FUND BALANCE:				
Beginning of year			76,018	
End of year			$ 163,533	

City of Gardena
Schedule of Revenues, Expenditures, and Changes in Fund Balance - Budget and Actual
American Rescue Plan Special Revenue Fund
For the Year Ended June 30, 2023

	Original Budget	Final Budget	Actual	Variance with Final Budget
REVENUES:				
Intergovernmental	$ 2,300,000	$ 2,300,000	$ 897,621	$ (1,402,379)
Use of money and property	-	-	71,674	71,674
Total revenues	2,300,000	2,300,000	969,295	(1,330,705)
OTHER FINANCING USES:				
Transfers out	(2,300,000)	(2,300,000)	(969,295)	1,330,705
Total other financing uses	(2,300,000)	(2,300,000)	(969,295)	1,330,705
NET CHANGE IN FUND BALANCE	$ -	$ -	-	$ -
FUND BALANCE:				
Beginning of year			-	
End of year			$ -	

City of Gardena

Annual Comprehensive Financial Report
For the Year Ended June 30, 2023

(This page is intentionally left blank)

CITY DEBT SERVICE FUNDS

DEBT SERVICE FUNDS:

To account for the accumulation of resources for, and the payment of, interest and principal on general long-term debt, including certificates of participation and refunding revenue bonds, and capital leases.

2006 Refunding COPs, Series A Fund - To account for the accumulated funds for the payment of interest and principal for the certificates issued in 2006.

2007 Refunding Revenue Bonds SBRPCA Fund - To account for the accumulated funds for the payment of interest and principal for the refunding bonds issued in 2007.

2014 Taxable Lease Revenue Refunding Bonds Fund - To account for the accumulated funds for the payment of interest and principal for the refunding bonds issued in 2014.

2017 Lease Financing Bonds Fund - To account for the accumulated funds for the payment of interest and principal for the refunding bonds issued in 2017.

2020 Taxable Pension Obligation Bonds Fund - To account for the accumulated funds for the payment of interest and principal for the pension obligation bonds issued in 2020.

2021 Lease Revenue Bonds Fund - To account for the accumulated funds for the payment of interest and principal for the lease revenue bonds issued in 2021.

City of Gardena
Combining Balance Sheet
All Debt Service Funds
June 30, 2023

	2006 Refunding COPs, Series A	2007 Refunding Revenue Bonds SBRPCA	2014 Taxable Lease Revenue Refunding Bonds	2017 Lease Financing Bonds
ASSETS				
Cash and investments with fiscal agents	$ 1,815,137	$ 216,760	$ 7	$ -
Prepaid items and deposits	-	1,010	1,206	287,950
Total assets	$ 1,815,137	$ 217,770	$ 1,213	$ 287,950
LIABILITIES AND FUND BALANCES				
Liabilities:				
Accrued liabilities	$ 291	$ -	$ -	$ -
Due to other funds	-	1,010	1,206	287,950
Total liabilities	291	1,010	1,206	287,950
Fund Balances:				
Nonspendable	-	1,010	1,206	287,950
Restricted	1,814,846	215,750	-	-
Unassigned (deficit)	-	-	(1,199)	(287,950)
Total fund balances (deficit)	1,814,846	216,760	7	-
Total liabilities and fund balances	$ 1,815,137	$ 217,770	$ 1,213	$ 287,950

City of Gardena
Combining Balance Sheet (Continued)
All Debt Service Funds
June 30, 2023

	2020 Taxable Pension Obligation Bonds	2021 Lease Obligation Bonds	Total
ASSETS			
Cash and investments with fiscal agents	$ 20,974	$ 11,754,403	$ 13,807,281
Prepaid items and deposits	917	417	291,500
Total assets	$ 21,891	$ 11,754,820	$ 14,098,781
LIABILITIES AND FUND BALANCES			
Liabilities:			
Due to other funds	$ -	$ -	$ 291
Due to other funds	917	58,188	349,271
Total liabilities	917	58,188	349,562
Fund Balances:			
Nonspendable	917	417	291,500
Restricted	20,057	11,696,215	13,746,868
Unassigned (deficit)	-	-	(289,149)
Total fund balances (deficit)	20,974	11,696,632	13,749,219
Total liabilities and fund balances	$ 21,891	$ 11,754,820	$ 14,098,781

City of Gardena
Combining Schedule of Revenues, Expenditures, and Changes in Fund Balances
All Debt Service Funds
For the Year Ended June 30, 2023

	2006 Refunding COPs, Series A	2007 Refunding Revenue Bonds SBRPCA	2014 Taxable Lease Revenue Refunding Bonds	2017 Lease Financing Bonds
REVENUES:				
Use of money and property	$ 32,137	$ 5,664	$ 2	$ -
Total revenues	32,137	5,664	2	-
EXPENDITURES:				
Debt service:				
Principal retirement	625,000	120,000	65,000	280,000
Interest and fiscal charges	402,117	68,138	441,157	8,508
Total expenditures	1,027,117	188,138	506,157	288,508
REVENUES OVER (UNDER) EXPENDITURES	(994,980)	(182,474)	(506,155)	(288,508)
OTHER FINANCING SOURCES (USES):				
Transfers in	1,034,463	218,850	506,157	288,508
Transfers out	-	-	-	-
Total other financing sources	1,034,463	218,850	506,157	288,508
CHANGES IN FUND BALANCES	39,483	36,376	2	-
FUND BALANCES:				
Beginning of the year	1,775,363	180,384	5	-
End of the year	$ 1,814,846	$ 216,760	$ 7	$ -

City of Gardena
Combining Schedule of Revenues, Expenditures, and Changes in Fund Balances (Continued)
All Debt Service Funds
For the Year Ended June 30, 2023

	2020 Taxable Pension Obligation Bonds	2021 Lease Revenue Bonds	Total
REVENUES:			
Use of money and property	$ 20,949	$ 357,802	$ 416,554
Total revenues	20,949	357,802	416,554
EXPENDITURES:			
Debt service:			
Principal retirement	2,859,799	440,000	4,389,799
Interest and fiscal charges	2,295,930	500,083	3,715,933
Total expenditures	5,155,729	940,083	8,105,732
REVENUES OVER (UNDER) EXPENDITURES	(5,134,780)	(582,281)	(7,689,178)
OTHER FINANCING SOURCES (USES):			
Transfers in	5,154,897	940,083	8,142,958
Transfers out	-	(57,771)	(57,771)
Total other financing sources	5,154,897	882,312	8,085,187
CHANGES IN FUND BALANCES	20,117	300,031	396,009
FUND BALANCES:			
Beginning of the year	857	11,396,601	13,353,210
End of the year	$ 20,974	$ 11,696,632	$ 13,749,219

City of Gardena
Schedule of Revenues, Expenditures, and Changes in Fund Balance - Budget and Actual
2006 Refunding COPs, Series A Debt Service Fund
For the Year Ended June 30, 2023

	Original Budget	Final Budget	Actual	Variance with Final Budget
REVENUES:				
Use of money and property	$ -	$ -	$ 32,137	$ 32,137
Total revenues	-	-	32,137	32,137
EXPENDITURES:				
Debt Service:				
Principal retirement	625,000	625,000	625,000	-
Interest and fiscal charges	401,340	401,340	402,117	(777)
Total expenditures	1,026,340	1,026,340	1,027,117	(777)
EXCESS OF REVENUES OVER (UNDER) EXPENDITURES	(1,026,340)	(1,026,340)	(994,980)	31,360
OTHER FINANCING SOURCES:				
Transfers in	1,026,340	1,026,340	1,034,463	8,123
Total other financing sources	1,026,340	1,026,340	1,034,463	8,123
NET CHANGE IN FUND BALANCE	$ -	$ -	39,483	$ 39,483
FUND BALANCE:				
Beginning of year			1,775,363	
End of year			$ 1,814,846	

City of Gardena
Schedule of Revenues, Expenditures, and Changes in Fund Balance - Budget and Actual
2007 Refunding Revenue Bonds SBRPCA Debt Service Fund
For the Year Ended June 30, 2023

	Original Budget	Final Budget	Actual	Variance with Final Budget
REVENUES:				
Use of money and property	$ -	$ -	$ 5,664	$ 5,664
Total revenues	-	-	5,664	5,664
EXPENDITURES:				
Debt Service:				
Principal retirement	120,000	120,000	120,000	-
Interest and fiscal charges	68,545	68,545	68,138	407
Total expenditures	188,545	188,545	188,138	407
EXCESS OF REVENUES OVER (UNDER) EXPENDITURES	(188,545)	(188,545)	(182,474)	6,071
OTHER FINANCING SOURCES:				
Transfers in	188,545	188,545	218,850	30,305
Total other financing sources	188,545	188,545	218,850	30,305
NET CHANGE IN FUND BALANCE	$ -	$ -	36,376	$ 36,376
FUND BALANCE:				
Beginning of year			180,384	
End of year			$ 216,760	

City of Gardena
Schedule of Revenues, Expenditures, and Changes in Fund Balance - Budget and Actual
2014 Taxable Lease Revenue Refunding Bonds Debt Service Fund
For the Year Ended June 30, 2023

	Original Budget	Final Budget	Actual	Variance with Final Budget
REVENUES:				
Use of money and property	$ -	$ -	$ 2	$ 2
Total revenues	-	-	2	2
EXPENDITURES:				
Debt Service:				
Principal retirement	65,000	65,000	65,000	-
Interest and fiscal charges	441,011	441,011	441,157	(146)
Total expenditures	506,011	506,011	506,157	(146)
EXCESS OF REVENUES OVER (UNDER) EXPENDITURES	(506,011)	(506,011)	(506,155)	(144)
OTHER FINANCING SOURCES:				
Transfers in	506,011	506,011	506,157	146
Total other financing sources	506,011	506,011	506,157	146
NET CHANGE IN FUND BALANCE	$ -	$ -	2	$ 2
FUND BALANCE:				
Beginning of year			5	
End of year			$ 7	

City of Gardena
Schedule of Revenues, Expenditures, and Changes in Fund Balance - Budget and Actual
2017 Lease Financing Bonds - Debt Service Fund
For the Year Ended June 30, 2023

	Original Budget	Final Budget	Actual	Variance with Final Budget
EXPENDITURES:				
Debt Service:				
Principal retirement	$ 280,000	$ 280,000	$ 280,000	$ -
Interest and fiscal charges	8,798	8,798	8,508	290
Total expenditures	288,798	288,798	288,508	290
OTHER FINANCING SOURCES:				
Transfers in	288,798	288,798	288,508	(290)
Total other financing sources	288,798	288,798	288,508	(290)
NET CHANGE IN FUND BALANCE	$ -	$ -	-	$ -
FUND BALANCE:				
Beginning of year			-	
End of year			$ -	

City of Gardena
Schedule of Revenues, Expenditures, and Changes in Fund Balance - Budget and Actual
2020 Taxable Pension Obligation Bonds Debt Service Fund
For the Year Ended June 30, 2023

	Original Budget	Final Budget	Actual	Variance with Final Budget
REVENUES:				
Use of money and property	$ 4,020	$ 4,020	$ 20,949	$ 16,929
Intra governmental reimbursements	5,151,543	5,151,543	-	(5,151,543)
Total revenues	5,155,563	5,155,563	20,949	(5,134,614)
EXPENDITURES:				
Debt Service:				
Principal retirement	2,859,800	2,859,250	2,859,799	(549)
Interest and fiscal charges	2,295,763	2,296,313	2,295,930	383
Total expenditures	5,155,563	5,155,563	5,155,729	(166)
EXCESS OF REVENUES OVER (UNDER) EXPENDITURES	-	-	(5,134,780)	(5,134,780)
OTHER FINANCING SOURCES:				
Transfers in	-	-	5,154,897	5,154,897
Total other financing sources	-	-	5,154,897	5,154,897
NET CHANGE IN FUND BALANCE	$ -	$ -	20,117	$ 20,117
FUND BALANCE:				
Beginning of year			857	
End of year			$ 20,974	

City of Gardena
Schedule of Revenues, Expenditures, and Changes in Fund Balance - Budget and Actual
2021 Lease Revenue Bonds
For the Year Ended June 30, 2023

	Original Budget	Final Budget	Actual	Variance with Final Budget
REVENUES:				
Use of money and property	$ -	$ -	$ 357,802	$ 357,802
Total revenues	-	-	357,802	357,802
EXPENDITURES:				
Debt Service:				
Principal retirement	440,000	440,000	440,000	-
Interest and fiscal charges	500,500	500,500	500,083	417
Total expenditures	940,500	940,500	940,083	417
EXCESS OF REVENUES OVER (UNDER) EXPENDITURES	(940,500)	(940,500)	(582,281)	358,219
OTHER FINANCING SOURCES:				
Transfers in	940,500	940,500	940,083	(417)
Transfers out	(6,020,000)	(6,020,000)	(57,771)	5,962,229
Total other financing sources	(5,079,500)	(5,079,500)	882,312	5,961,812
NET CHANGE IN FUND BALANCE	$ (6,020,000)	$ (6,020,000)	300,031	$ 6,320,031
FUND BALANCE:				
Beginning of year			11,396,601	
End of year			$ 11,696,632	

City of Gardena

Annual Comprehensive Financial Report
For the Year Ended June 30, 2023

(This page is intentionally left blank)

INTERNAL SERVICE FUNDS

The Internal Service Fund accounts for financing of goods and services provided by one department to other departments of the City on a cost-reimbursement basis.

Internal Service Funds include:

Liability Insurance Fund - To finance and account for the City's general liability claims program.

Workers' Compensation Fund - To finance and account for the workers' compensation claims program.

Health Benefit Fund - To finance and account for the health benefit claims program.

City of Gardena

Annual Comprehensive Financial Report
For the Year Ended June 30, 2023

(This page is intentionally left blank)

City of Gardena
Combining Statement of Net Position
Internal Service Funds
June 30, 2023

	Liability Insurance	Workers' Compensation	Health Benefit	Total
ASSETS				
Current Assets:				
Cash and investments	$ 4,637,227	$ 2,724,577	$ 5,116,252	$ 12,478,056
Accounts receivables	5,735	-	-	5,735
Prepaid items and deposits	1,625	2,146	11,606	15,377
Total current assets	4,644,587	2,726,723	5,127,858	12,499,168
Total assets	4,644,587	2,726,723	5,127,858	12,499,168
LIABILITIES				
Current liabilities:				
Accounts payable	93,410	736	1,814	95,960
Accrued liabilities	257,537	32,112	23,441	313,090
Claims payable - due within one year	1,308,000	2,827,000	676,358	4,811,358
Total current liabilities	1,658,947	2,859,848	701,613	5,220,408
Noncurrent liabilities:				
Claims payable - due in more than one year	2,169,000	11,360,000	-	13,529,000
Total noncurrent liabilities	2,169,000	11,360,000	-	13,529,000
Total liabilities	3,827,947	14,219,848	701,613	18,749,408
NET POSITION				
Unrestricted (deficit)	816,640	(11,493,125)	4,426,245	(6,250,240)
Total net position (deficit)	$ 816,640	$ (11,493,125)	$ 4,426,245	$ (6,250,240)

City of Gardena
Combining Statement of Revenues, Expenses, and Changes in Net Position
Internal Service Funds
For the Year Ended June 30, 2023

	Liability Insurance	Workers' Compensation	Health Benefit	Total
OPERATING REVENUES:				
Charges for services	$ 1,903,564	$ 1,791,688	$ 9,997,704	$ 13,692,956
Other	1,317,192	37,837	147,218	1,502,247
Total operating revenues	3,220,756	1,829,525	10,144,922	15,195,203
OPERATING EXPENSES:				
Insurance claims	2,406,348	3,349,888	2,914,716	8,670,952
General and administrative	877,448	462,670	5,415,105	6,755,223
Other operating expenses	51,273	87,705	104,162	243,140
Total operating expenses	3,335,069	3,900,263	8,433,983	15,669,315
OPERATING INCOME (LOSS)	(114,313)	(2,070,738)	1,710,939	(474,112)
NONOPERATING REVENUES:				
Interest income	35,551	38,548	112,687	186,786
Total nonoperating revenues	35,551	38,548	112,687	186,786
INCOME (LOSS) BEFORE TRANSFERS	(78,762)	(2,032,190)	1,823,626	(287,326)
TRANSFERS:				
Transfers in	1,856,821	1,130,031	-	2,986,852
Transfers out	(1,583)	(3,933)	(1,636,852)	(1,642,368)
Total transfers	1,855,238	1,126,098	(1,636,852)	1,344,484
CHANGES IN NET POSITION	1,776,476	(906,092)	186,774	1,057,158
NET POSITION (DEFICIT):				
Beginning of year	(959,836)	(10,587,033)	4,239,471	(7,307,398)
End of year	$ 816,640	$ (11,493,125)	$ 4,426,245	$ (6,250,240)

City of Gardena
Combining Statement of Cash Flows
Internal Service Funds
For the Year Ended June 30, 2023

	Liability Insurance	Workers' Compensation	Health Benefit	Total
CASH FLOWS FROM OPERATING ACTIVITIES:				
Receipts from users	$ 1,903,564	$ 1,991,688	$ 9,997,704	$ 13,892,956
Receipts from claims recoveries	1,317,192	37,837	147,218	1,502,247
Payments for insurance claims	(1,879,061)	(2,352,946)	(2,902,212)	(7,134,219)
Payments to suppliers	(1,326,468)	(539,235)	(5,633,732)	(7,499,435)
Net cash provided by (used in) operating activities	15,227	(862,656)	1,608,978	761,549
CASH FLOWS FROM NONCAPITAL FINANCING ACTIVITIES:				
Transfers from other funds	1,856,821	1,130,031	-	2,986,852
Transfers to other funds	(1,583)	(3,933)	(1,636,852)	(1,642,368)
Net cash provided by (used in) noncapital financing activities	1,855,238	1,126,098	(1,636,852)	1,344,484
CASH FLOWS FROM INVESTING ACTIVITIES:				
Interest received	35,551	38,548	112,687	186,786
Net cash provided by investing activities	35,551	38,548	112,687	186,786
Net change in cash and cash equivalents	1,906,016	301,990	84,813	2,292,819
CASH AND CASH EQUIVALENTS:				
Beginning of year	2,731,211	2,422,587	5,031,439	10,185,237
End of year	$ 4,637,227	$ 2,724,577	$ 5,116,252	$ 12,478,056
RECONCILIATION OF OPERATING INCOME (LOSS) TO NET CASH PROVIDED BY (USED IN) OPERATING ACTIVITIES:				
Operating income (loss)	$ (114,313)	$ (2,070,738)	$ 1,710,939	$ (474,112)
Adjustments to reconcile operating income (loss) to net cash provided by (used in) operating activities:				
(Increase)decrease in accounts receivable	-	200,000	-	200,000
(Increase)decrease in prepaid items and deposits	(1,315)	-	(7,558)	(8,873)
Increase (decrease) in accounts payable	(152,517)	(6,125)	1,814	(156,828)
Increase (decrease) in accrued liabilities	(243,915)	17,265	(93,026)	(319,676)
Increase (decrease) in deposits payable	-	-	(15,695)	(15,695)
Increase (decrease) in claims payable	527,287	996,942	12,504	1,536,733
Total adjustment	129,540	1,208,082	(101,961)	1,235,661
Net cash provided by (used in) operating activities	$ 15,227	$ (862,656)	$ 1,608,978	$ 761,549

City of Gardena

Annual Comprehensive Financial Report
For the Year Ended June 30, 2023

(This page is intentionally left blank)

STATISTICAL SECTION

Fiscal Year 2022-23

STATISTICAL SECTION

Fiscal Year 2022-23

(This page is intentionally left blank)

CITY OF GARDENA
STATISTICAL SECTION

Fiscal Year 2022-23

This part of the City of Gardena's annual comprehensive financial report presents detailed information as a context for understanding what the information in the financial statements, note disclosures, and required supplementary information say about the government's overall financial health.

CONTENTS	Page
Financial Trends - These tables contain trend information that may assist the reader in the City's current financial performance by placing it in historical perspective.	
- Net Position by Component	166
- Changes in Net Position	168
- Fund Balances of Governmental Funds	172
- Changes in Fund Balances - Governmental Funds	174
Revenue Capacity - These tables contain information that may help in assessing the viability of the City's most significant revenue sources, the property and sales taxes.	
- Governmental Revenues by Sources	176
- General Governmental Expenditures by Function	178
- Assessed Valuation and Actual Value of Taxable Property	180
- Assessed Value of Property by User Code	182
- Assessed Value and Estimated Value of Taxable Property	184
- Construction and Bank Deposits	186
- Property Tax Rates - All Overlapping Governments	188
- Direct and Overlapping Property Tax Rates	190
- Ten Largest Property Taxpayers	192
- Top 25 Sales Tax Producers	193
- Property Tax Levies, Tax Collections, and Delinquency	194
- Card Club Gross Revenue Fee	195
- Utility Users Tax Received	196
- Taxable Sales by Category	197
Debt Capacity - These tables present information that may assist the reader in analyzing the affordability of the City's current levels of outstanding debt and the City's ability to issue debt in the future.	
- Ratio of Outstanding Debt by Type	198
- Pledged - Revenue Coverage	201
- Ratio of General Bonded Debt Outstanding	202
- Direct and Overlapping Bonded Debt	203
- Legal Debt Margin Information	204
- Debt Service Payment Schedule	206
Demographic and Economic Information - These tables offer demographic and economic indicators to help the reader understand the environment within which the City's financial activities take place.	
- Demographic and Economic Statistics	209
- Ten Principal Employers	210
- Unemployment Rates	211
Operating Information - These tables contain service and infrastructure indicators that can inform one's understanding how the information in the City's financial statements relate to the services the City provides and the activities it performs.	
- Full-Time and Part-Time City Employees by Function	212
- Employee Union Representation	213
- Operating Indicators	214
- Capital Asset Statistics by Function	215

City of Gardena

Net Position by Component [1]

Last Ten Fiscal Years Ended June 30, 2023

(accrual basis of accounting)

	Fiscal Year				
	2022-23	2021-22	2020-21	2019-20	2018-19
Governmental Activities					
Net Investment in Capital Assets	$ 43,557,695	$ 40,126,502	$ 28,550,313	$ 30,055,713	$ 47,404,733
Restricted for:					
Debt Service	1,994,718	1,617,913	1,681,507	1,708,162	1,669,313
Employment and Training Services	-	-	-	-	-
Law Enforcement	1,414,499	1,459,666	1,593,265	1,080,052	1,344,114
Local Street Improvements	14,126,722	10,385,580	9,329,940	7,956,523	7,130,678
Economic Development	6,965,240	6,914,470	5,783,794	4,393,701	5,306,507
Capital Projects	301,897	273,887	273,887	273,887	295,912
Other Purposes	1,219,550	1,014,200	662,807	689,290	657,424
Specific Projects and Programs	-	-	-	-	-
Total Restricted:	26,022,626	21,665,716	19,325,200	16,101,615	16,403,948
Unrestricted[2]	(115,019,564)	(95,499,040)	(114,185,399)	(126,640,099)	(131,787,090)
Total governmental activities net position	($45,439,243)	($33,706,822)	($66,309,886)	($80,482,771)	($67,978,409)
Business-type Activities					
Net Investment in Capital Assets	$59,138,198	$59,701,427	$60,014,796	$50,474,813	$53,054,448
Unrestricted[2]	(32,642,965)	(33,216,568)	(34,052,901)	(32,350,671)	(29,646,082)
Total business-type activities net position	$26,495,233	$26,484,859	$25,961,895	$18,124,142	$23,408,366
Primary Government					
Net Investment in Capital Assets	$102,695,893	$99,827,929	$88,565,109	$80,530,526	$100,459,181
Restricted	26,022,626	21,665,716	19,325,200	16,101,615	16,403,948
Unrestricted[2]	(147,662,529)	(128,715,608)	(148,238,300)	(158,990,770)	(161,433,172)
Total Primary Government Net Position:	$ (18,944,010)	$ (7,221,963)	$ (40,347,991)	$ (62,358,629)	$ (44,570,043)

NOTE: [1] Accounting standards require that net position be reported in three components in the financial statements: net investment in capital assets, restricted, and unrestricted. Net position are considered restricted only when (1) an external party, such as the State of California or the federal government, places a restriction on how the revenues may be used, or (2) enabling legislation is enacted by the City.

Source: City of Gardena, Administrative Services Department - Finance Division

City of Gardena

Net Position by Component (Continued) [1]

Last Ten Fiscal Years Ended June 30, 2023

(accrual basis of accounting)

	Fiscal Year				
	2017-18[2]	2016-17	2015-16	2014-15	2013-14
Governmental Activities					
Net Investment in Capital Assets	$ 27,748,135	$ 28,138,906	$ 27,897,717	$ 26,430,711	$ 21,675,303
Restricted for:					
Debt Service	1,916,945	1,924,432	2,679,363	2,965,697	3,471,506
Employment and Training Services	5,287	43,611	164,116	300,190	397,593
Law Enforcement	921,976	914,062	1,251,314	1,701,810	2,186,672
Local Street Improvements	6,060,770	6,205,701	7,072,378	7,930,518	7,049,906
Local Street Improvements	6,006,024	1,986,202	2,394,395	2,292,714	-
Economic Development	571,089	295,912	301,546	-	-
Other Purposes	633,275	651,830	289,859	447,605	478,453
Specific Projects and Programs	-	-	-	-	-
Total Restricted:	16,115,366	12,021,750	14,152,971	15,638,534	13,584,130
Unrestricted	(107,886,487)	(99,400,392)	(60,913,888)	(67,531,463)	(64,355,607)
Total governmental activities net position	($64,022,986)	($59,239,736)	($18,863,200)	($25,462,218)	($29,096,174)
Business-type Activities					
Net Investment in Capital Assets	$56,261,253	$60,150,166	$62,151,750	$67,684,810	$70,809,060
Unrestricted	(27,969,730)	(27,390,162)	(21,068,543)	(18,107,410)	(15,654,544)
Total business-type activities net position	$28,291,523	$32,760,004	$41,083,207	$49,577,400	$55,154,516
Primary Government					
Net Investment in Capital Assets	$84,009,388	$88,289,072	$90,049,467	$94,115,521	$92,484,363
Restricted	16,115,366	12,021,750	14,152,971	15,638,534	13,584,130
Unrestricted	(135,817,893)	(126,790,554)	(81,982,431)	(85,638,873)	(79,990,151)
Total Primary Government Net Position:	$ (35,693,139)	$ (26,479,732)	$ 22,220,007	$ 24,115,182	$ 26,078,342

NOTE: [1] Accounting standards require that net position be reported in three components in the financial statements: net investment in capital assets, restricted, and unrestricted. Net position are considered restricted only when (1) an external party, such as the State of California or the federal government, places a restriction on how the revenues may be used, or (2) enabling legislation is enacted by the City.

[2] 2017 balances were restated due to implementation of GASB 75

Source: City of Gardena, Administrative Services Department - Finance Division

City of Gardena
Changes in Net Position
Last Ten Fiscal Years Ended June 30, 2023
(accrual basis of accounting)

	Fiscal Year				
	2022-23	2021-22	2020-21	2019-20	2018-19
Expenses					
Governmental Activities					
General Government	$ 7,470,021	$ 7,771,663	$ 7,807,099	$ 7,383,173	$ 8,609,254
Public Safety	77,971,300	27,964,662	47,363,640	47,760,821	43,617,238
Public Works	10,737,606	11,239,762	7,543,698	10,958,845	11,717,321
Recreation and Human Services	8,229,820	7,566,226	6,766,739	6,600,989	6,395,004
Community Development	2,266,794	5,946,949	2,986,934	2,692,644	2,662,554
Interest and fiscal charges	3,773,164	3,888,463	2,532,013	1,156,041	1,191,118
Total governmental activities expenses:	110,448,705	64,377,725	75,000,123	76,552,513	74,192,489
Business-type Activities					
GTrans	28,643,376	27,966,497	29,505,837	31,024,629	28,646,739
Sewer	1,466,607	1,423,680	1,190,734	1,651,788	1,512,189
Total business-type activities expenses:	30,109,983	29,390,177	30,696,571	32,676,417	30,158,928
Total primary government expenses:	140,558,688	93,767,902	105,696,694	109,228,930	104,351,417
Program Revenues					
Governmental Activities					
Charges for services:					
General Government	4,149,501	8,769,328	5,333,187	4,072,004	4,107,289
Public Safety	1,251,096	1,236,057	1,240,360	1,338,121	1,862,764
Public Works	396,408	534,045	378,834	351,732	351,463
Recreation and Human Services	3,647,400	3,647,094	2,750,536	3,801,562	2,962,339
Community Development	2,521,913	3,139,836	2,499,553	2,246,297	1,687,652
Interest and fiscal charges	-	-	-	-	-
Operating Grants and Contributions	5,814,708	4,081,043	14,663,306	3,351,864	3,142,207
Capital Grants and Contributions	3,329,828	2,511,878	3,017,989	1,621,611	2,037,030
Total governmental activities program revenues:	21,110,854	23,919,281	29,883,765	16,783,191	16,150,744
Business-type Activities					
Charges for services:					
GTrans	1,793,580	1,643,970	135,875	1,766,952	2,382,758
Sewer	2,473,501	2,610,910	2,685,365	2,323,753	2,016,346
Operating Grants and Contributions	22,744,442	22,018,364	20,725,314	21,277,188	20,612,788
Capital Grants and Contributions	3,186,920	3,915,704	14,856,026	1,962,998	1,086,741
Total business-type activities program revenues:	30,198,443	30,188,948	38,402,580	27,330,891	26,098,633
Total primary government revenues:	$ 51,309,297	$ 54,108,229	$ 68,286,345	$ 44,114,082	$ 42,249,377

Source: City of Gardena, Administrative Services Department - Finance Division

City of Gardena
Changes in Net Position (Continued)
Last Ten Fiscal Years Ended June 30, 2023
(accrual basis of accounting)

	Fiscal Year				
	2017-18	2016-17	2015-16	2014-15	2013-14
Expenses					
Governmental Activities					
General Government	$ 6,177,468	$ 5,848,247	$ 5,730,664	$ 6,239,825	$ 11,808,280
Public Safety	41,420,762	38,700,824	36,304,203	35,912,110	32,551,301
Public Works	7,120,106	6,956,766	8,545,467	9,846,657	10,300,134
Recreation and Human Services	9,742,993	9,154,921	6,777,838	6,677,536	6,147,992
Community Development	2,938,656	2,796,216	2,538,835	2,675,341	7,470,002
Interest and fiscal charges	1,241,054	1,382,078	1,365,398	1,805,649	1,466,193
Total governmental activities expenses:	68,641,039	64,839,052	61,262,405	63,157,118	69,743,902
Business-type Activities					
GTrans	27,804,739	28,195,640	26,410,211	26,643,082	23,188,943
Sewer	1,432,695	1,760,303	1,046,864	1,021,131	849,779
Total business-type activities expenses:	29,237,434	29,955,943	27,457,075	27,664,213	24,038,722
Total primary government expenses:	97,878,473	94,794,995	88,719,480	90,821,331	93,782,624
Program Revenues					
Governmental Activities					
Charges for services:					
General Government	3,864,795	3,504,735	3,298,306	3,022,929	3,013,410
Public Safety	1,312,945	1,422,001	1,174,116	1,337,761	1,404,006
Public Works	418,667	615,289	513,495	340,541	384,600
Recreation and Human Services	2,685,240	2,979,625	2,315,212	2,238,445	2,092,788
Community Development	1,724,501	1,771,754	2,187,082	1,432,560	2,922,090
Interest and fiscal charges	-	-	-	-	-
Operating Grants and Contributions	3,719,048	2,048,938	2,067,123	2,963,405	7,092,380
Capital Grants and Contributions	2,002,799	1,268,576	1,918,489	7,167,801	3,531,787
Total governmental activities program revenues:	15,727,995	13,610,918	13,473,823	18,503,442	20,441,061
Business-type Activities					
Charges for services:					
GTrans	2,459,105	2,482,516	2,685,573	3,346,233	3,434,257
Sewer	1,790,296	954,552	673,199	727,054	922,304
Operating Grants and Contributions	19,855,368	17,462,145	16,905,476	17,353,740	15,518,103
Capital Grants and Contributions	576,031	3,120,351	1,850,968	832,350	1,470,222
Total business-type activities program revenues:	24,680,800	24,019,564	22,115,216	22,259,377	21,344,886
Total primary government revenues:	$ 40,408,795	$ 37,630,482	$ 35,589,039	$ 40,762,819	$ 41,785,947

Source: City of Gardena, Administrative Services Department - Finance Division

City of Gardena
Changes in Net Position (Continued)
Last Ten Fiscal Years Ended June 30, 2023
(accrual basis of accounting)

	Fiscal Year				
	2022-23	2021-22	2020-21	2019-20	2018-19
Net (expense)/revenue: [1]					
Governmental activities	(89,337,851)	(40,458,444)	(46,089,053)	(59,769,322)	(58,041,745)
Business-type activities	88,460	798,771	7,676,625	(5,345,526)	(4,060,295)
Total net revenues (expenses):	(89,249,391)	(39,659,673)	(38,412,428)	(65,114,848)	(62,102,040)
General Revenue and Other Changes in Net Position					
Governmental activities					
Taxes:					
Property taxes	9,985,883	9,186,838	8,799,364	8,205,539	7,735,545
Sales tax	29,662,286	27,908,699	23,760,125	12,440,147	13,466,178
Business license	2,733,939	2,647,094	2,508,287	2,438,304	2,843,375
Utility user taxes	6,317,851	5,481,395	4,970,799	4,801,229	4,955,645
Franchise taxes	3,275,380	3,075,659	2,809,101	2,816,277	2,777,572
Card club taxes	8,633,144	10,544,947	3,999,147	4,874,457	8,101,583
Other taxes	5,882,066	4,626,009	3,764,716	3,920,393	4,354,725
Vehicle license - unrestricted	8,073,890	7,485,678	7,203,563	6,788,130	6,378,321
Investment income	1,881,428	(1,520,476)	(57,164)	1,036,057	1,061,732
Miscellaneous	643,709	3,281,484	2,730,183	690,353	1,384,272
Gain on sale of assets	-	-	(190,979)	(863,795)	10,622
Transfers	515,854	344,181	(35,204)	117,869	978,428
Total governmental activities	77,605,430	73,061,508	60,261,938	47,264,960	54,047,998
Business-type activities					
Investment income	437,768	68,374	125,924	162,760	155,566
Miscellaneous	-	-	-	-	-
Gain (loss) on sale of assets	-	-	-	16,411	-
Transfers	(515,854)	(344,181)	35,204	(117,869)	(978,428)
Total business-type activities:	(78,086)	(275,807)	161,128	61,302	(822,862)
Total primary government:	77,527,344	72,785,701	60,423,066	47,326,262	53,225,136
Change in Net Position					
Governmental activities	(11,732,421)	32,603,064	14,172,885	(12,504,362)	(3,993,747)
Business-type activities	10,374	522,964	7,837,753	(5,284,224)	(4,883,157)
Total primary government:	$ (11,722,047)	$ 33,126,028	$ 22,010,638	$ (17,788,586)	$ (8,876,904)

[1] Net (expense)/revenue is the difference between the expenses and program revenues of a function or program. It indicates the degree to which a function or program is supported with its own fees and program specific grants versus its reliance upon funding from taxes and other general revenues.
-A number in parentheses are net expenses, indicating that expenses were greater than program revenues and therefore, general revenues were needed to finance that function or program.
-Numbers without parentheses are net revenues, meaning that program revenues were more than sufficient to cover expenses.

Source: City of Gardena, Administrative Services Department - Finance Division

City of Gardena
Changes in Net Position (Continued)
Last Ten Fiscal Years Ended June 30, 2023
(accrual basis of accounting)

	Fiscal Year				
	2017-18	2016-17	2015-16	2014-15	2013-14
Net (expense)/revenue: [1]					
Governmental activities	(52,913,044)	(51,228,234)	(47,788,582)	(44,653,676)	(49,302,841)
Business-type activities	(4,556,634)	(5,936,379)	(5,341,859)	(5,404,836)	(2,693,836)
Total net revenues (expenses):	(57,469,678)	(57,164,613)	(53,130,441)	(50,058,512)	(51,996,677)
General Revenue and Other Changes in Net Position					
Governmental activities					
Taxes:					
Property taxes	7,150,957	7,130,426	6,729,849	6,402,520	6,192,249
Sales tax	11,006,901	11,204,697	11,227,326	9,965,476	9,472,341
Business license	2,727,532	2,606,279	2,536,438	2,547,148	2,218,097
Utility user taxes	5,088,450	5,147,736	5,212,410	5,335,375	5,383,285
Franchise taxes	2,609,219	2,440,108	2,534,820	2,417,342	2,351,576
Card club taxes	8,071,001	8,975,991	9,057,202	9,517,550	9,467,078
Other taxes	3,985,315	3,855,705	3,479,372	3,136,222	2,965,176
Vehicle license - unrestricted	5,994,920	5,677,909	5,445,385	5,166,984	4,958,745
Investment income	158,902	129,187	499,279	248,773	270,187
Miscellaneous	1,134,729	2,261,772	2,566,919	3,329,396	2,643,424
Gain on sale of assets	201,560	883,201	1,877,151	-	-
Transfers	38,632	9,898	3,221,449	200,846	408,925
Total governmental activities	48,168,118	50,322,909	54,387,600	48,267,632	46,331,083
Business-type activities					
Investment income	124,243	77,618	55,492	24,196	11,333
Miscellaneous	2,542	18,512	13,623	4,370	2,733
Gain (loss) on sale of assets	-	-	-	-	(2,600,806)
Transfers	(38,632)	(9,898)	(3,221,449)	(200,846)	(408,925)
Total business-type activities:	88,153	86,232	(3,152,334)	(172,280)	(2,995,665)
Total primary government:	48,256,271	50,409,141	51,235,266	48,095,352	43,335,418
Change in Net Position					
Governmental activities	(4,744,926)	(905,325)	6,599,018	3,613,956	(2,971,758)
Business-type activities	(4,468,481)	(5,850,147)	(8,494,193)	(5,577,116)	(5,689,501)
Total primary government:	$ (9,213,407)	$ (6,755,472)	$ (1,895,175)	$ (1,963,160)	$ (8,661,259)

[1] Net (expense)/revenue is the difference between the expenses and program revenues of a function or program. It indicates the degree to which a function or program is supported with its own fees and program specific grants versus its reliance upon funding from taxes and other general revenues.
-A number in parentheses are net expenses, indicating that expenses were greater than program revenues and therefore, general revenues were needed to finance that function or program.
-Numbers without parentheses are net revenues, meaning that program revenues were more than sufficient to cover expenses.

Source: City of Gardena, Administrative Services Department - Finance Division

City of Gardena
Fund Balances of Governmental Funds
Last Ten Fiscal Years Ended June 30, 2023
(modified accrual basis of accounting)

	Fiscal Year				
	2022-23	2021-22	2020-21	2019-20	2018-19
General Fund					
Nonspendable [1]	$ 327,406	$ 352,425	$ 1,214,022	$ 302,361	$ 333,803
Restricted [1]	-	-	-	-	-
Committed [1]	26,848,674	26,936,620	18,697,703	7,310,676	13,287,448
Assigned [1]	22,662,517	14,236,728	8,670,503	2,848,416	2,622,256
Unassigned [1]	300,000	300,001	200,000	173,122	271,377
Total General Fund:	$50,138,597	$41,825,774	$28,782,228	$10,634,575	$16,514,884
All Other Governmental Funds					
Nonspendable [1]	$ 311,097	$ 329,979	$ 342,428	$ 350,432	$ 308,741
Restricted [1]	36,402,832	31,699,951	16,660,769	15,682,481	16,089,466
Committed [1]	-	-	-	-	-
Assigned [1]	-	-	-	-	-
Unassigned [1]	(347,129)	(185,700)	(1,298,092)	(81,218)	-
Total all other governmental funds:	$ 36,366,800	$ 31,844,230	$ 15,705,105	$ 15,951,695	$ 16,398,207

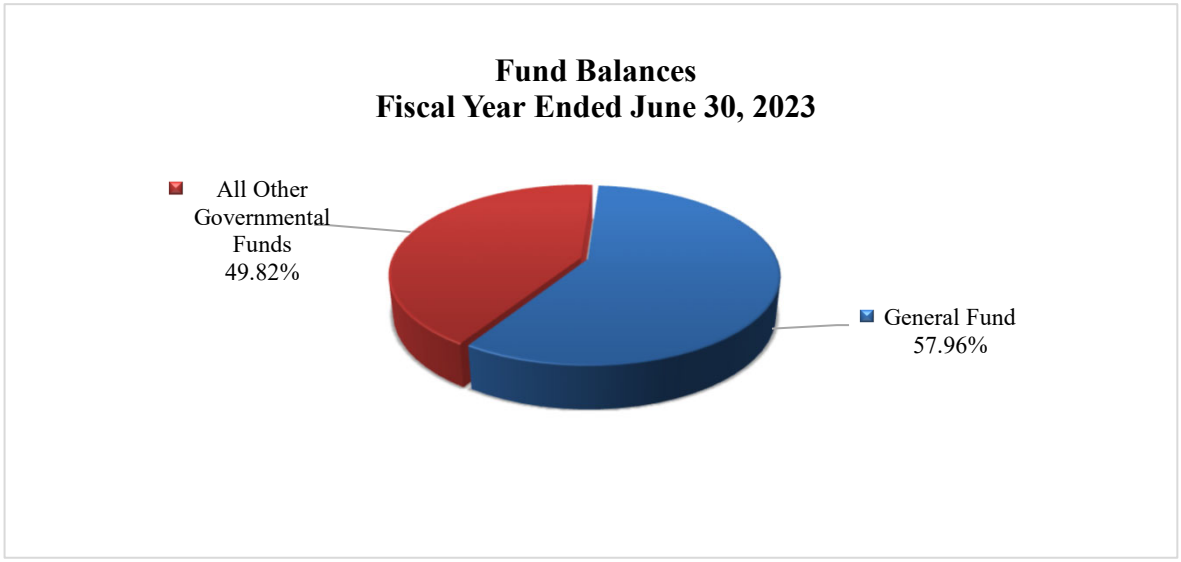

NOTES:

[1] New reporting requirements per GASB 54.

Source: City of Gardena, Administrative Services Department - Finance Division

City of Gardena
Fund Balances of Governmental Funds (Continued)
Last Ten Fiscal Years Ended June 30, 2023
(modified accrual basis of accounting)

	Fiscal Year				
	2017-18	2016-17	2015-16	2014-15	2013-14
General Fund					
Nonspendable [1]	$ 385,931	$ 294,133	$ 189,819	$ 179,244	$ 181,457
Restricted [1]	5,287	43,611	164,116	327,752	57,980
Committed [1]	19,315,675	19,413,135	17,542,367	7,274,423	7,274,423
Assigned [1]	3,609,547	3,936,266	2,773,686	7,579,856	4,357,472
Unassigned [1]	200,000	200,000	200,000	400,362	238,582
Total General Fund:	$23,516,440	$23,887,145	$20,869,988	$15,761,637	$12,109,914
All Other Governmental Funds					
Nonspendable [1]	$ 16,769,655	$ -	$ -	$ 4,734	$ -
Restricted [1]	-	10,073,376	11,726,127	13,048,054	13,526,150
Committed [1]	-	3,765,323	3,776,154	3,051,323	2,658,379
Assigned [1]	-	-	(20,809)	179,079	377,900
Assigned [1]	-	-	-	-	-
Total all other governmental funds:	$ 16,769,655	$ 13,838,699	$ 15,481,472	$ 16,283,190	$ 16,562,429

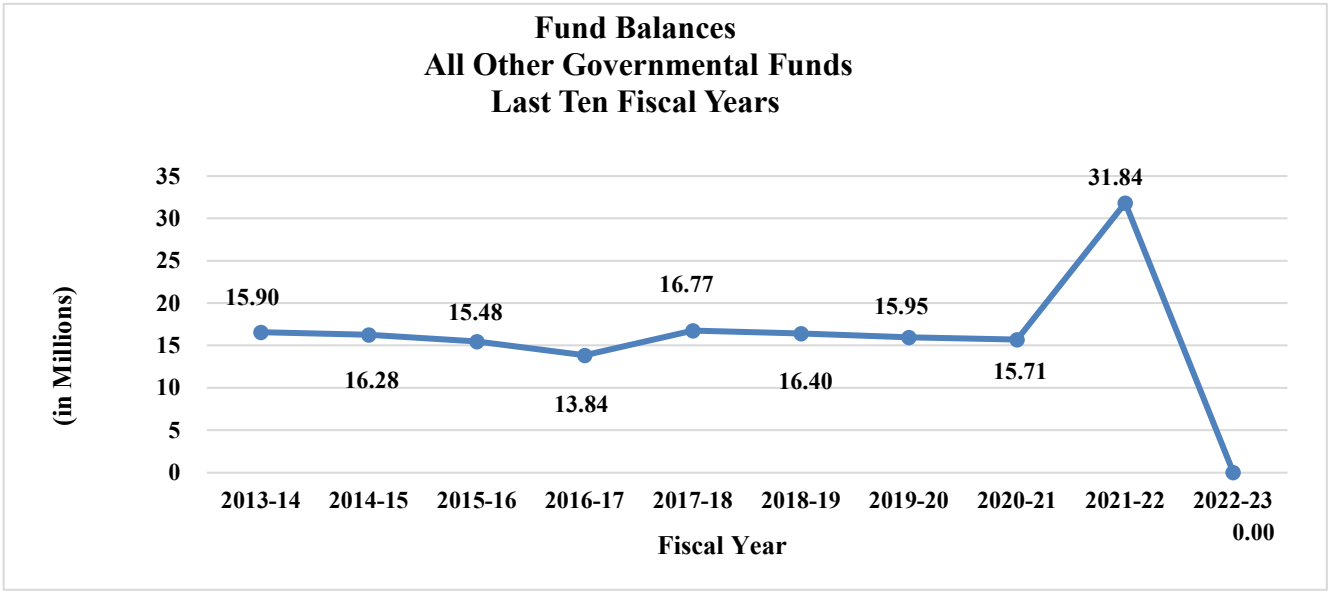

NOTES:

[1] New reporting requirements per GASB 54.

Source: City of Gardena, Administrative Services Department - Finance Division

City of Gardena
Changes In Fund Balances - Governmental Funds
Last Ten Fiscal Years Ended June 30, 2023
(modified accrual basis of accounting)

	Fiscal Year				
	2022-23	2021-22	2020-21 [2]	2019-20	2018-19
Revenues:					
Taxes	$ 74,247,538	$ 70,663,462	$ 57,968,745	$ 46,128,710	$ 50,827,680
Licenses and permits	2,158,749	2,900,062	2,389,538	1,646,059	1,735,711
Use of money and property	1,881,431	(1,517,780)	(56,416)	1,036,059	1,061,734
Intergovernmental	12,265,983	13,689,853	16,142,006	7,157,208	7,409,245
Fines, forfeitures, and penalties	1,235,414	3,660,686	3,168,468	1,112,890	2,261,549
Charges for services	5,723,983	5,448,044	5,188,250	6,142,402	5,270,787
Miscellaneous	720,310	5,245,065	1,664,391	831,773	892,283
Total Revenues:	98,233,408	100,089,392	86,464,982	64,055,101	69,458,989
Expenditures:					
Current:					
General government	6,208,151	5,296,661	5,325,270	6,576,421	6,004,196
Public safety	42,327,977	41,545,473	37,558,085	41,295,066	45,783,773
Public works	8,435,997	7,868,811	6,776,073	8,372,502	8,058,427
Recreation and Human resources	8,221,690	7,318,062	6,232,436	6,155,882	6,138,238
Community development	2,837,108	3,061,632	2,789,072	2,474,928	2,382,263
Capital outlay	8,816,842	8,929,107	5,199,699	3,636,782	6,127,264
Debt service:					
Principal	5,052,989	3,850,985	1,173,158	967,696	902,804
Interest and fiscal charges	3,750,867	3,899,642	2,340,735	1,155,814	1,198,262
Total Expenditures:	85,651,621	81,770,373	67,394,528	70,635,091	76,595,227
Excess of Revenues over (under) Expenditures	12,581,787	18,319,019	19,070,454	(6,579,990)	(7,136,238)
Other Financing Sources (Uses):					
Proceeds of long-term debt	-	-	-	-	-
Proceeds from sale of assets	34,093	127,623	3,492	46,241	16,413
Proceeds from debt issuance	-	15,391,848	79,193,585	-	-
Issuance of capital leases	-	-	-	-	-
Costs of Bond issuance	-	-	-	-	-
Contribution to pension trust	-	-	(78,731,264)	-	-
Issuance of new debt	1,048,143	-	-	-	-
Issuance discount	-	-	-	-	-
Issuance of loans	-	-	-	86,223	86,223
Transfers in	18,089,299	16,400,118	12,724,862	7,476,706	9,013,583
Transfers out	(18,917,929)	(21,055,937)	(14,360,066)	(7,356,001)	(8,350,155)
Total Other Financing Sources (Uses):	253,606	10,863,652	(1,169,391)	253,169	766,064
Net change in fund balances	$ 12,835,393	$ 29,182,671	$ 17,901,063	$ (6,326,821)	$ (6,370,174)
Debt service as a percentage of noncapital expenditures: [1]	10.41%	9.66%	5.39%	3.14%	2.87%

NOTE:

[1] Ratio is calculated by dividing total debt service expenditures by total non-capital expenditures (difference between total expenditures and capitalized capital outlay expenditures)

[2] Cost of bond issuance was reclassified into interest and fiscal charges from other financing uses

Source: City of Gardena, Administrative Services Department - Finance Division

City of Gardena
Changes In Fund Balances - Governmental Funds (Continued)
Last Ten Fiscal Years Ended June 30, 2023
(modified accrual basis of accounting)

	Fiscal Year				
	2017-18	2016-17	2015-16	2014-15	2013-14
Revenues:					
Taxes	$ 47,527,518	$ 46,847,209	$ 46,222,802	$ 44,488,617	$ 43,008,547
Licenses and permits	1,694,670	1,800,752	1,521,379	1,109,169	1,023,180
Use of money and property	158,902	129,186	499,278	248,773	270,187
Intergovernmental	6,201,645	5,549,872	5,705,627	11,575,383	11,983,118
Fines, forfeitures, and penalties	1,124,079	1,102,235	1,794,049	1,433,758	1,226,243
Charges for services	5,070,020	5,155,573	4,545,874	4,208,616	4,146,210
Miscellaneous	1,197,011	2,944,050	1,807,155	3,141,148	2,754,989
Total Revenues:	62,973,845	63,528,877	62,096,164	66,205,464	64,412,474
Expenditures:					
Current:					
General government	5,025,047	4,914,416	4,886,467	5,108,064	4,938,101
Public safety	37,851,314	36,977,198	34,674,068	32,542,544	32,069,172
Public works	4,012,134	4,064,485	5,584,816	5,352,388	5,395,817
Recreation and Human resources	9,194,054	8,631,034	6,498,830	6,135,402	6,086,777
Community development	2,734,299	2,757,861	2,533,734	2,594,007	7,499,226
Capital outlay	3,794,206	3,349,481	8,332,649	8,064,783	6,075,302
Debt service:					
Principal	627,898	2,703,105	754,158	9,228,535	844,172
Interest and fiscal charges	1,227,659	1,431,641	1,369,936	2,029,383	1,482,716
Total Expenditures:	64,466,611	64,829,221	64,634,658	71,055,106	64,391,283
Excess of Revenues over (under) Expenditures	(1,492,766)	(1,300,344)	(2,538,494)	(4,849,642)	21,191
Other Financing Sources (Uses):					
Proceeds of long-term debt	-	-	-	-	2,521,577
Proceeds from sale of property	423,735	1,024,538	4,990,156	-	-
Proceeds from debt issuance	-	-	-	-	-
Issuance of capital leases	-	-	-	-	201,829
Costs of Bond issuance	-	-	-	-	-
Contribution to pension trust	-	-	-	-	-
Issuance of new debt	-	1,635,000	-	9,110,000	-
Issuance discount	-	-	-	(297,460)	-
Issuance of loans	86,223	86,223	311,026	408,740	-
Transfers in	6,747,282	6,487,933	11,143,623	10,368,953	7,765,591
Transfers out	(6,708,650)	(6,558,966)	(9,599,678)	(11,368,107)	(7,994,802)
Total Other Financing Sources (Uses):	548,590	2,674,728	6,845,127	8,222,126	2,494,195
Net change in fund balances	$ (944,176)	$ 1,374,384	$ 4,306,633	$ 3,372,484	$ 2,515,386
Debt service as a percentage of noncapital expenditures: [1]	3.03%	6.64%	3.51%	17.16%	3.81%

NOTE:

[1] Ratio is calculated by dividing total debt service expenditures by total non-capital expenditures (difference between total expenditures and capitalized capital outlay expenditures)

Source: City of Gardena, Administrative Services Department - Finance Division

City of Gardena
Governmental Revenues By Sources
Last Ten Fiscal Years

Fiscal Year	Taxes	Permits, Licenses and Fees	Fines and Forfeitures	Uses of Money and Property
2013-14	43,008,547	1,023,180	1,226,243	270,187
2014-15	44,488,617	1,109,169	1,433,758	248,773
2015-16	46,222,802	1,521,379	1,794,049	499,278
2016-17	46,847,209	1,800,752	1,102,235	129,186
2017-18	47,527,518	1,694,670	1,124,079	158,902
2018-19	50,827,680	1,735,711	2,261,549	1,061,734
2019-20	46,128,710	1,646,059	1,112,890	1,036,059
2020-21	57,968,745	2,389,538	3,168,468	(56,416)
2021-22	70,663,462	2,900,062	3,660,686	(1,517,780)
2022-23	74,247,538	2,158,749	1,235,414	1,881,431

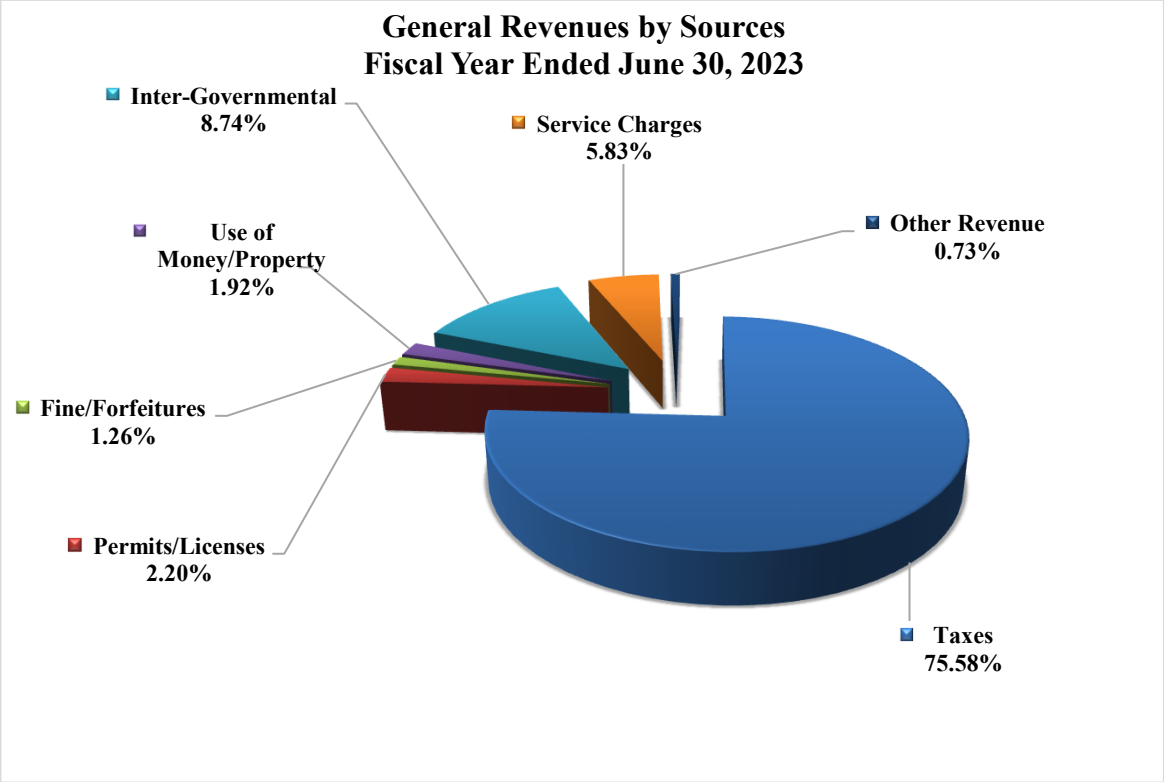

Source: City of Gardena, Administrative Services Department - Finance Division

City of Gardena
Governmental Revenues By Sources (Continued)
Last Ten Fiscal Years

Fiscal Year	Inter-Governmental	Charges for Services	Other Revenues	Total
2013-14	11,983,118	4,146,210	2,754,989	64,412,474
2014-15	11,575,383	4,208,616	3,141,148	66,205,464
2015-16	5,705,627	4,545,874	1,807,155	62,096,164
2016-17	5,549,872	5,155,573	2,944,050	63,528,877
2017-18	6,201,645	5,070,020	1,197,011	62,973,845
2018-19	7,409,245	5,270,787	892,283	69,458,989
2019-20	7,157,208	6,142,402	831,773	64,055,101
2020-21	16,142,006	5,188,250	1,664,391	86,464,982
2021-22	13,689,853	5,448,044	5,245,065	100,089,392
2022-23	12,265,983	5,723,983	720,310	98,233,408

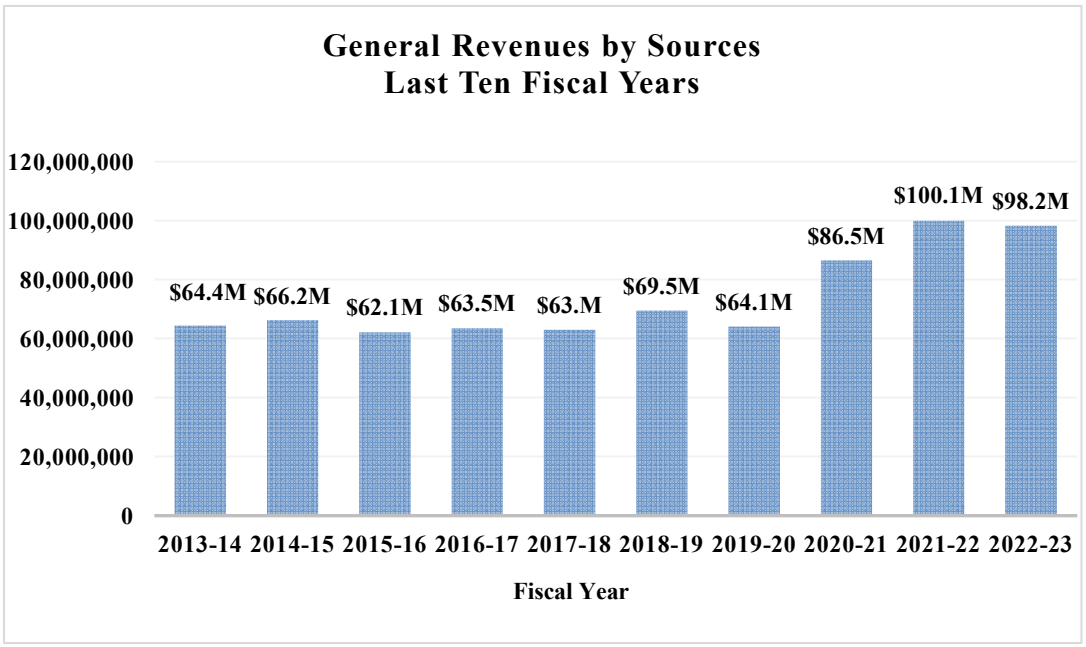

Source: City of Gardena, Administrative Services Department - Finance Division

City of Gardena
General Governmental Expenditures By Function
Last Ten Fiscal Years

Fiscal Year	General Government	Public Safety	Public Works	Recreation and Human Services
2013-14	4,938,101	32,069,172	5,395,817	6,086,777
2014-15	5,108,064	32,542,544	5,352,388	6,135,402
2015-16	4,886,467	34,674,068	5,584,816	6,498,830
2016-17	4,914,416	36,977,198	4,064,485	8,631,034
2017-18	5,025,047	37,851,314	4,012,134	9,194,054
2018-19	6,004,196	45,783,773	8,058,427	6,138,238
2019-20	6,576,421	41,295,066	8,372,502	6,155,882
2020-21	5,325,270	37,558,085	6,776,073	6,232,436
2021-22	5,296,661	41,545,473	7,868,811	7,318,062
2022-23	6,208,151	42,327,977	8,435,997	8,221,690

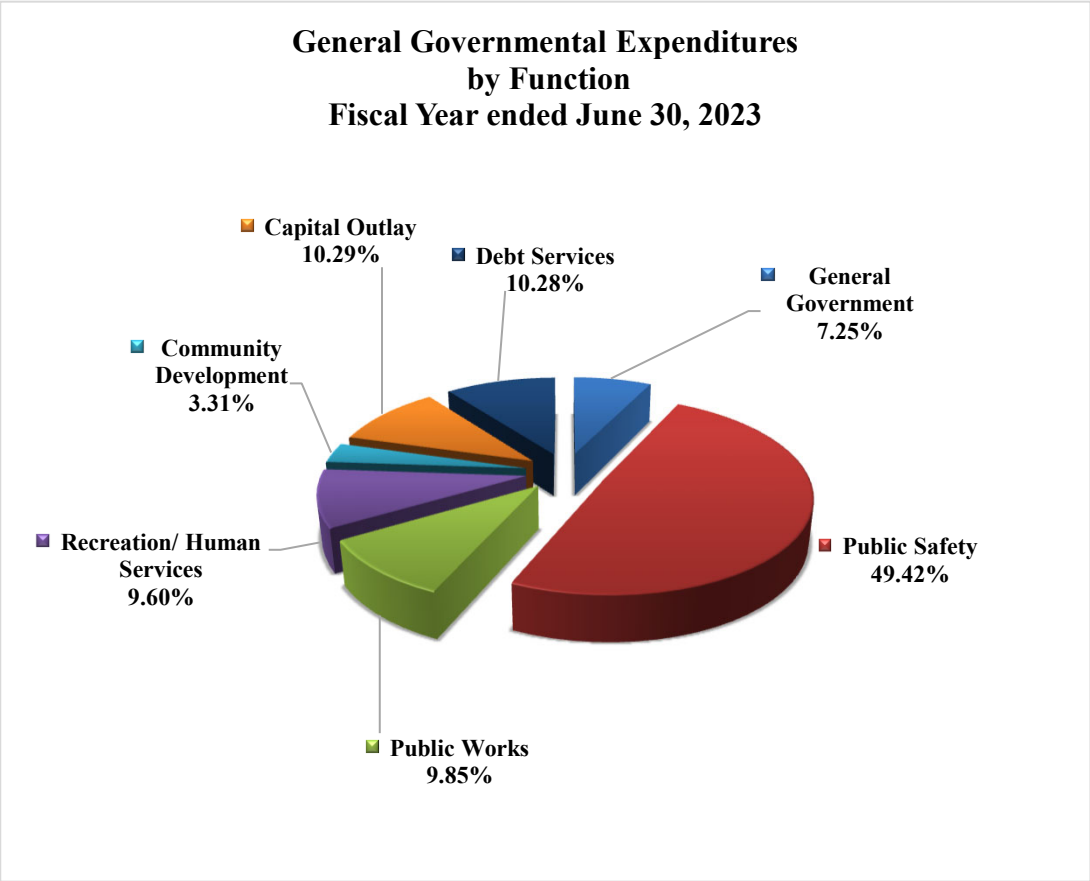

Note: These figures include all governmental fund types and exclude other financing sources (uses).
(General, Special Revenue, Capital Projects and Debt Service Funds)

(1) These figures include Lease/Bonds, Payments for Debt Services and excluding Cost of bonds issuance and escrow payments.

(2) 2021 cost of bond issuance was reclassified into debt service from other financing uses

Source: City of Gardena, Administrative Services Department - Finance Division

City of Gardena
General Governmental Expenditures By Function (Continued)
Last Ten Fiscal Years

Fiscal Year	Community Development	Capital Outlay	Debt Service [1][2]	Total
2013-14	7,499,226	6,075,302	2,326,888	64,391,283
2014-15	2,594,007	8,064,783	11,257,918	71,055,106
2015-16	2,533,734	8,332,649	2,124,094	64,634,658
2016-17	2,757,861	3,349,481	4,134,746	64,829,221
2017-18	2,734,299	3,794,206	1,855,557	64,466,611
2018-19	2,382,263	6,127,264	2,101,066	76,595,227
2019-20	2,474,928	3,636,782	2,123,510	70,635,091
2020-21	2,789,072	5,199,699	3,513,803	67,394,438
2021-22	3,061,632	8,929,107	7,750,627	81,770,373
2022-23	2,837,108	8,816,842	8,803,856	85,651,621

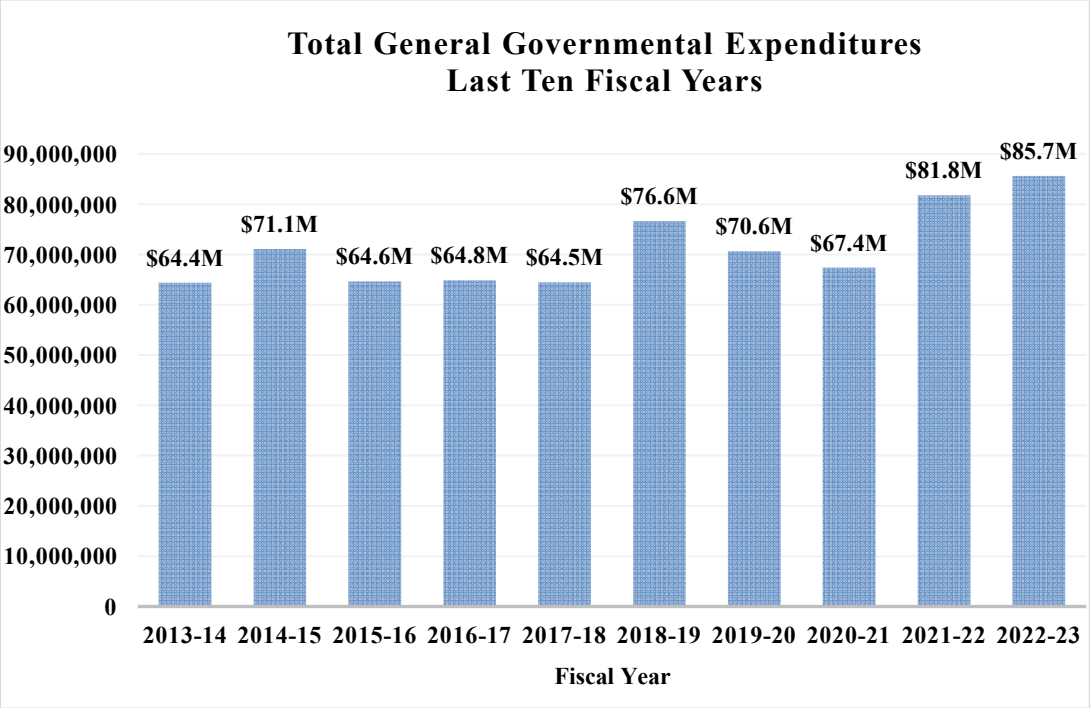

Note: These figures include all governmental fund types and exclude other financing sources (uses). (General, Special Revenue, Capital Projects and Debt Service Funds)

[1] These figures include Lease/Bonds, Payments for Debt Services and excluding Cost of bonds issuance and escrow payments.

[2] 2021 cost of bond issuance was reclassified into debt service from other financing uses

Source: City of Gardena, Administrative Services Department - Finance Division

City of Gardena

Assessed Valuation [1] and Actual Value of Taxable Property
Last Ten Fiscal Years

	STATE ASSESSED				LOCALLY ASSESSED				
	SECURED -UTILITY				SECURED				
Fiscal Year	Land	Improve-ments	Personal Property	Total	Land	Improve-ments	Personal Property	Other Exemptions	Total
2013-14	3,447,381	500	0	3,447,881	2,610,426,775	2,096,160,323	20,014,837	(93,299,293)	4,633,302,642
2014-15	3,447,381	500	0	3,447,881	2,733,522,040	2,198,829,256	21,125,783	(101,657,690)	4,851,819,389
2015-16	256,548	500	0	257,048	2,901,287,675	2,302,898,593	21,733,418	(100,791,312)	5,125,128,374
2016-17	256,548	500	0	257,048	3,059,313,278	2,408,565,245	21,982,639	(101,483,543)	5,388,377,619
2017-18	256,548	500	0	257,048	3,259,570,366	2,534,031,367	22,671,336	(97,785,800)	5,718,487,269
2018-19	256,548	500	0	257,048	3,514,987,541	2,674,639,058	22,263,329	(106,481,118)	6,105,408,810
2019-20	256,548	500	0	257,048	3,745,803,302	2,836,862,048	22,530,962	(99,222,153)	6,505,974,159
2020-21	379,899	4,167	0	384,066	4,005,949,237	3,004,367,152	24,551,498	(105,940,809)	6,928,927,078
2021-22	213,049	0	0	213,049	4,213,320,667	3,080,008,549	27,201,792	(100,843,365)	7,219,687,643
2022-23	213,049	0	0	213,049	4,581,077,862	3,256,656,564	27,312,819	(83,188,820)	7,781,858,425

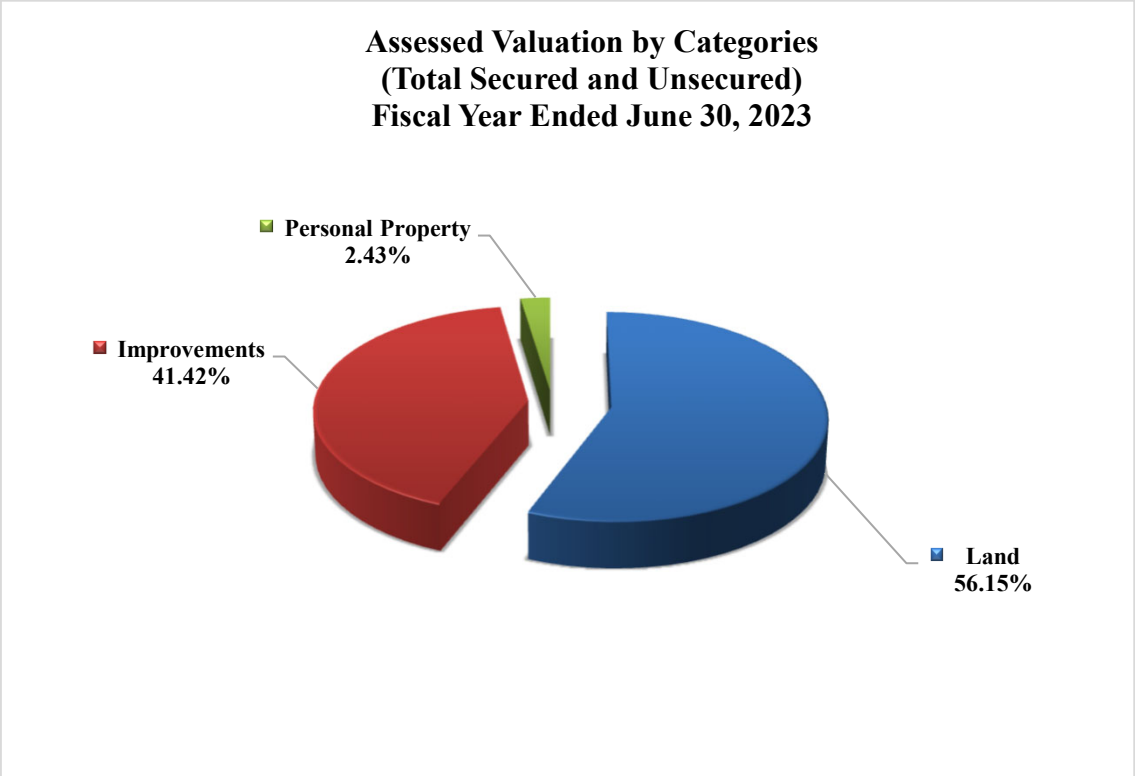

In 1978, California voters passed Proposition 13 which set the property tax at a 1.00% fixed amount. This 1.00% is shared by all the taxing agencies for which the subject property resides within. In addition to 1.00% fixed amount, property owners are charged taxes as a percentage of assessed property values for the payment of any voter approved bonds.
Assessed valuation is based on 100% of full value in accordance with Section 135 of the California Revenue and Taxation Code.

Source: [1] L.A. County Assessor 2022/23 Combined Tax Rolls
[2] Hdl Coren & Cone.

City of Gardena

Assessed Valuation [1] and Actual Value of Taxable Property (Continued)
Last Ten Fiscal Years

Fiscal Year	LOCALLY ASSESSED UNSECURED Improvements	Personal Property	Other Exemptions	Total	TOTALS Before Other Exemptions	Taxable Assessed Value	% INCR. (DECR.)	Total Direct Rate [2]	Home-Owner Property Tax Relief
2013-14	145,965,185	175,158,651	(108,000)	321,015,836	5,051,173,652	4,957,766,359	3.61%	0.11856%	50,015,653
2014-15	140,748,595	174,403,010	(89,000)	315,062,605	5,272,076,565	5,170,329,875	4.29%	0.11837%	49,327,059
2015-16	149,004,701	178,788,974	(82,000)	327,711,675	5,553,970,409	5,453,097,097	5.47%	0.11809%	48,873,792
2016-17	130,722,770	167,676,863	(82,000)	298,317,633	5,788,517,843	5,686,952,300	4.29%	0.11790%	48,088,576
2017-18	125,455,566	161,242,825	(47,000)	286,651,391	6,103,228,508	6,005,395,708	5.60%	0.11766%	47,602,798
2018-19	125,099,278	166,925,685	(77,300)	291,947,663	6,504,171,939	6,397,613,521	6.53%	0.11737%	46,936,370
2019-20	123,980,060	170,442,727	(73,400)	294,349,387	6,899,876,147	6,800,580,594	6.30%	0.11711%	46,368,399
2020-21	119,705,782	174,999,947	(36,400)	294,669,329	7,329,957,682	7,223,980,473	6.23%	0.11685%	45,437,387
2021-22	120,700,759	169,061,580	(1,154,249)	288,608,090	7,610,506,396	7,508,508,782	3.94%	0.11672%	44,954,554
2022-23	122,253,280	171,000,192	(1,151,403)	292,102,069	8,158,513,766	8,074,173,543	7.53%	0.11644%	44,725,326

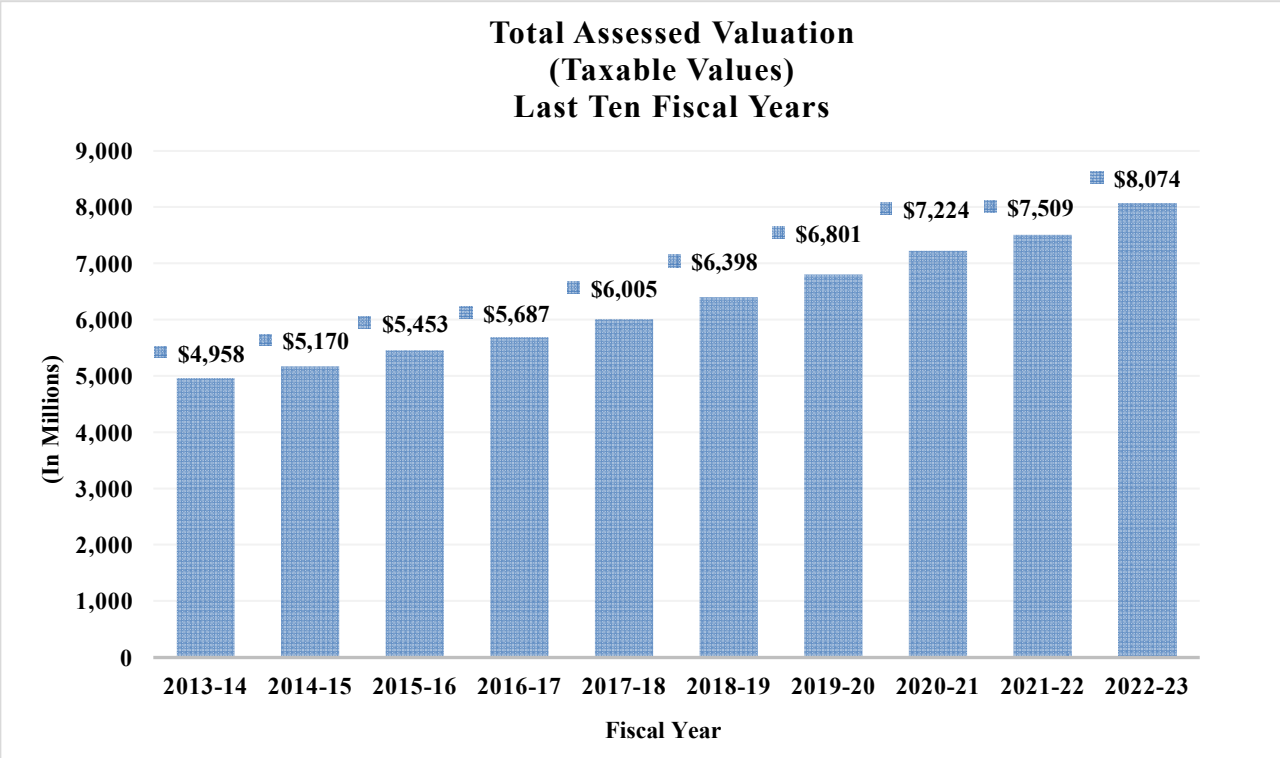

In 1978, California voters passed Proposition 13 which set the property tax at a 1.00% fixed amount. This 1.00% is shared by all the taxing agencies for which the subject property resides within. In addition to 1.00% fixed amount, property owners are charged taxes as a percentage of assessed property values for the payment of any voter approved bonds.
Assessed valuation is based on 100% of full value in accordance with Section 135 of the California Revenue and Taxation Code.

Source: [1] L.A. County Assessor 2022/23 Combined Tax Rolls
[2] Hdl Coren & Cone.

City of Gardena
Assessed Value of Property by User Code
Last Ten Fiscal Years

CATEGORY	Fiscal Year 2022-23	2021-22	2020-21	2019-20	2018-19
Residential	$5,247,758,428	$4,857,419,242	$4,671,664,590	$4,397,530,388	$4,139,852,554
Commercial	1,074,201,133	1,027,450,526	1,006,453,482	936,892,089	888,959,749
Industrial	1,208,490,671	1,117,152,653	1,037,251,905	964,891,072	889,298,836
Govt. Owned	22	-	-	-	-
Recreational	42,678,387	41,518,155	40,966,262	40,263,960	39,491,086
Institutional	114,427,704	94,990,583	89,836,280	76,976,001	74,813,850
Miscellaneous	88	-	-	-	-
Vacant land	66,945,560	66,349,257	69,851,264	75,744,666	62,990,225
SBE Nonunitary	213,049	213,049	384,066	257,048	257,048
Possessory Int.	27,356,432	14,807,227	12,903,295	13,675,983	10,002,510
Unsecured	292,102,069	288,608,090	294,669,329	294,349,387	291,947,663
Unknown	-	-	-	-	-
	8,074,173,543	7,508,508,782	7,223,980,473	6,800,580,594	6,397,613,521
Homeowner Exemption (1)	-	-	-	-	-
TOTALS:	$8,074,173,543	$7,508,508,782	$7,223,980,473	$6,800,580,594	$6,397,613,521

Notes: In 1978 the voters of the State of California passed Proposition 13 which limited taxes to a total maximum rate of 1% based upon the assessed value of the property being taxed. Each year, the assessed value of property may be increased by an "inflation factor" (limited to a maximum of 2%). With few exemptions, property is only reassessed as a result of new construction or at the time it is sold to a new owner. At that point, the property is reassessed based upon the added value of the construction or at the purchase price (market value) or economic value of the property sold. The assessed valuation data shown above represents the only data currently available with respect to the actual market value of taxable property and is subject to the limitation just mentioned.

-Exempt values are not included in Total.

(1) In 2006-07 certain report formatting changes have been made to comply with GASB 44 standard reporting requirements; therefore, the net of Homeowner Exemption is separated from previous years.

Source: L.A. County Assessor 2013/14-2022/23 Combined Tax Rolls, HdL, Coren & Cone

City of Gardena
Assessed Value of Property by User Code (Continued)
Last Ten Fiscal Years

CATEGORY	Fiscal Year 2017-18	2016-17	2015-16	2014-15	2013-14
Residential	$3,879,882,318	$3,623,545,163	$3,441,407,499	$3,247,456,567	$3,069,926,331
Commercial	831,348,140	791,527,339	750,255,119	715,396,379	680,433,002
Industrial	834,753,358	796,231,706	763,622,835	735,316,073	726,907,557
Govt. Owned	-	5,250,000	-	-	-
Recreational	38,342,794	38,760,141	39,348,412	38,689,706	38,596,521
Institutional	78,834,725	69,798,622	65,412,639	62,243,721	68,337,737
Miscellaneous	451,519	442,667	-	-	-
Vacant land	46,086,466	54,308,182	57,298,803	46,471,775	43,043,588
SBE Nonunitary	257,048	257,048	257,048	3,447,881	3,447,881
Possessory Int.	8,787,949	8,513,799	7,783,045	6,245,168	6,057,906
Unsecured	286,651,391	298,317,633	327,711,675	315,062,605	321,015,836
Unknown	-	-	22	-	-
	6,005,395,708	5,686,952,300	5,453,097,097	5,170,329,875	4,957,766,359
Homeowner Exemption (1)	-	-	-	-	-
TOTALS:	$6,005,395,708	$5,686,952,300	$5,453,097,097	$5,170,329,875	$4,957,766,359

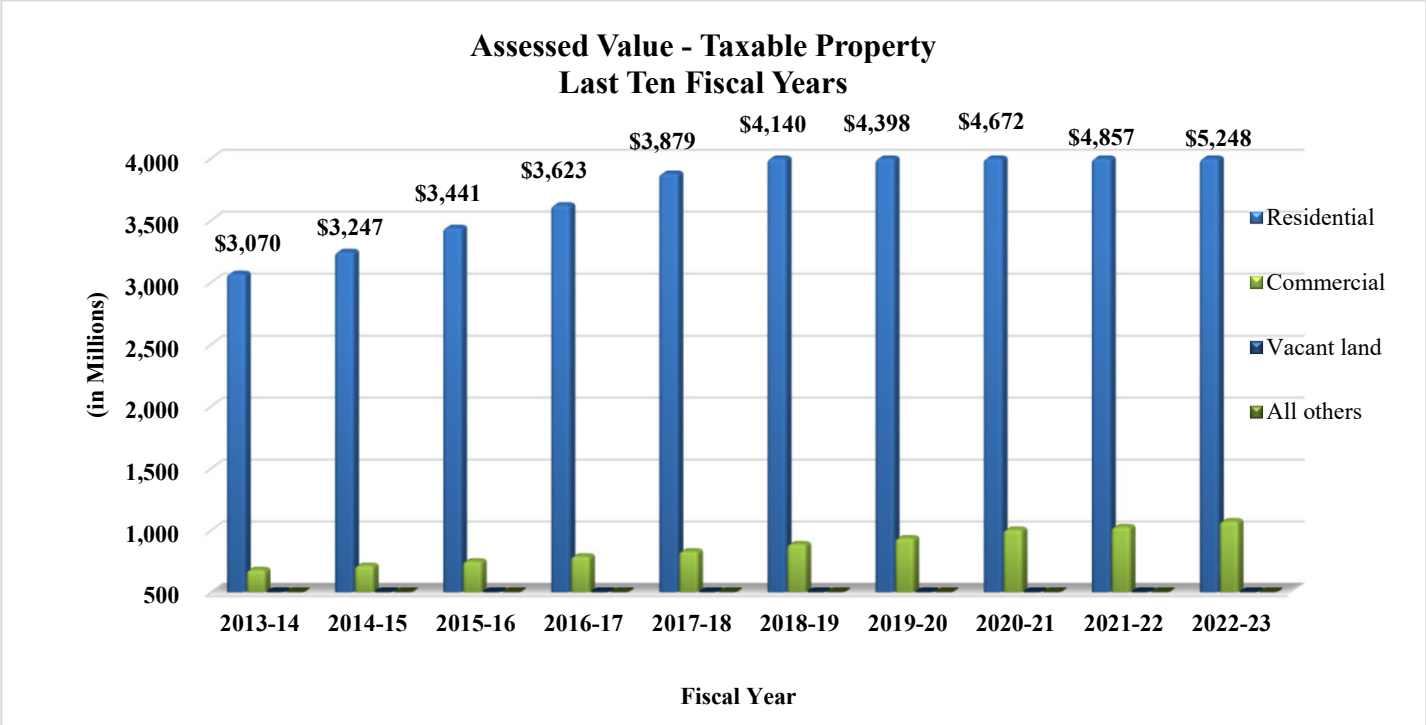

Notes: In 1978 the voters of the State of California passed Proposition 13 which limited taxes to a total maximum rate of 1% based upon the assessed value of the property being taxed. Each year, the assessed value of property may be increased by an "inflation factor" (limited to a maximum of 2%). With few exemptions, property is only reassessed as a result of new construction or at the time it is sold to a new owner. At that point, the property is reassessed based upon the added value of the construction or at the purchase price (market value) or economic value of the property sold. The assessed valuation data shown above represents the only data currently available with respect to the actual market value of taxable property and is subject to the limitation just mentioned.

-Exempt values are not included in Total.

(1) In 2006-07 certain report formatting changes have been made to comply with GASB 44 standard reporting requirements; therefore, the net of Homeowner Exemption is separated from previous years.

Source: L.A. County Assessor 2013/14-2022/23 Combined Tax Rolls, HdL, Coren & Cone

City of Gardena
Assessed Value and Estimated Value of Taxable Property
Last Ten Fiscal Years
(in thousands)

Fiscal Year	Residential	Commercial	Industrial	Agriculture	Recreational	Institutional	Govt. Owned	Vacant land
2013-14	3,069,926	680,433	726,908	-	38,597	68,338	-	43,043
2014-15	3,247,457	715,396	735,316	-	38,690	62,244	-	46,472
2015-16	3,441,407	750,255	763,623	-	39,348	65,413	-	57,299
2016-17	3,623,545	791,527	796,232	-	38,760	69,798	5,250	54,308
2017-18	3,879,882	831,348	834,753	-	38,342	78,834	-	46,086
2018-19	4,139,853	888,960	889,299	-	39,491	74,814	-	62,990
2019-20	4,397,530	936,892	964,891	-	40,264	76,976	-	75,745
2020-21	4,671,665	1,006,453	1,037,252	-	40,967	89,836	-	69,851
2021-22	4,857,419	1,027,451	1,117,153	-	41,518	94,991	-	66,349
2022-23	5,247,759	1,074,201	1,208,491	-	42,678	114,428	-	66,946

NOTES: Report formatting changes have been made to comply with GASB 44 standard reporting requirements.
Public Utility values are not included in this report.

(1) Tax Rate Areas: TRA 000576
-Tax rate limit: A state constitutional amendment (Proposition 13) provided that the tax rate was limited to 1% of full cash values, levied only by the County and shared with all other jurisdictions. All other jurisdictions and the County can levy a tax rate for voter-approved debt.

(2) Estimated Actual Value is derived from a series of calculations comparing median assessed values from 1940 to current median sales price and the Factor of Taxable Assessed Value is the result. This factor is changing from year to year; however, since the previous fiscal years calculating data is not available, the fiscal year 2007-08 factor is used.

Source: L.A. County Assessor 2013/14-2022/23 Combined Tax Rolls, HdL, Coren & Cone

City of Gardena
Assessed Value and Estimated Value of Taxable Property (Continued)
Last Ten Fiscal Years
(in thousands)

Fiscal Year	SBE Nonunitary	Possessory Int.	Unsecured	Misc.	TOTAL	Total Direct Tax Rate [1]	Estimated Taxable Value [2]	Factor of Taxable Assessed Value
2013-14	3,448	6,058	321,015	-	4,957,766	0.11856	6,612,222	1.33371
2014-15	3,448	6,245	315,062	-	5,170,330	0.11837	6,895,721	1.33371
2015-16	257	7,783	327,712	-	5,453,097	0.11809	7,272,850	1.33371
2016-17	257	8,514	298,317	442	5,686,950	0.11790	7,584,742	1.33371
2017-18	257	8,787	286,651	-	6,004,940	0.11790	8,008,849	1.33371
2018-19	257	10,002	291,948	-	6,397,614	0.11737	8,532,562	1.33371
2019-20	257	13,676	294,349	-	6,800,580	0.11711	9,070,002	1.33371
2020-21	384	12,903	294,669	-	7,223,980	0.11685	9,634,694	1.33371
2021-22	213	14,807	288,608	-	7,508,509	0.11672	10,014,174	1.33371
2022-23	213	27,356	292,102	-	8,074,174	0.11644	10,768,607	1.33371

NOTES: Report formatting changes have been made to comply with GASB 44 standard reporting requirements. Public Utility values are not included in this report.

[1] Tax Rate Areas: TRA 000576
-Tax rate limit: A state constitutional amendment (Proposition 13) provided that the tax rate was limited to 1% of full cash values, levied only by the County and shared with all other jurisdictions. All other jurisdictions and the County can levy a tax rate for voter-approved debt.

[2] Estimated Actual Value is derived from a series of calculations comparing median assessed values from 1940 to current median sales price and the Factor of Taxable Assessed Value is the result. This factor is changing from year to year; however, since the previous fiscal years calculating data is not available, the fiscal year 2007-08 factor is used.

Source: L.A. County Assessor 2013/14-2022/23 Combined Tax Rolls, HdL, Coren & Cone

City of Gardena
Construction and Bank Deposits
(Miscellaneous Information)
Last Ten Fiscal Years

	CONSTRUCTION[1]					
	Residential		Commercial		Industrial	
Fiscal Year	No. of Permits	Valuation	No. of Permits	Valuation	No. of Permits	Valuation
2013-14	650	11,943,363	232	10,733,859	2	225,600
2014-15	785	11,173,245	295	10,524,008	2	63,500
2015-16	1,126	18,042,192	253	12,303,725	2	26,500
2016-17	1,161	10,988,165	269	16,919,670	9	7,091,565
2017-18	964	18,379,450	264	25,034,187	15	1,069,280
2018-19	1,107	23,699,914	220	10,676,880	11	437,850
2019-20	927	33,001,214	164	11,378,321	10	88,468
2020-21	737	82,991,894	105	10,605,434	5	1,712,440
2021-22	1,041	49,722,116	146	20,804,846	2	320,000
2022-23	1,070	30,141,588	122	13,599,849	5	1,862,509

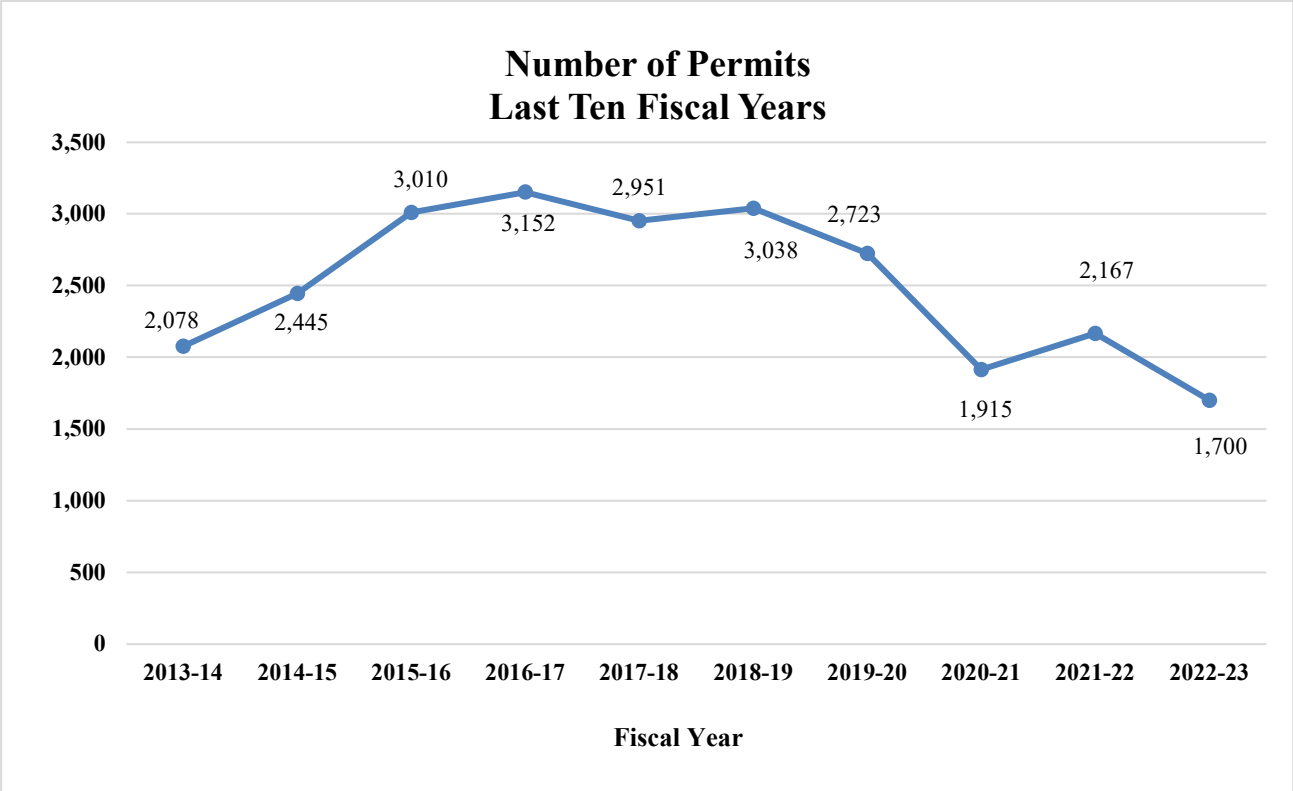

Sources: [1] City of Gardena, Community Development Department.

[2] City of Gardena-FDIC-Insured Institutions as of 06/30/2023

City of Gardena
Construction and Bank Deposits (Continued)
(Miscellaneous Information)
Last Ten Fiscal Years

Fiscal Year	CONSTRUCTION [1] All others No. of Permits	All others Valuation	Total No. of Permits	Total Valuation	Bank Deposits [2] (in Thousands)
2013-14	1,194	10,000	2,078	22,912,822	1,694,573
2014-15	1,363	966,527	2,445	22,727,280	1,656,979
2015-16	1,629	-	3,010	30,372,417	2,311,146
2016-17	1,713	-	3,152	34,999,400	1,913,039
2017-18	1,708	-	2,951	44,482,917	1,913,039
2018-19	1,700	-	3,038	34,814,644	1,980,803
2019-20	1,622	-	2,723	44,468,003	2,285,338
2020-21	1,068	310,030	1,915	95,619,798	2,483,396
2021-22	978	109,000	2,167	70,955,962	2,618,588
2022-23	503	117,273	1,700	45,721,219	2,484,565

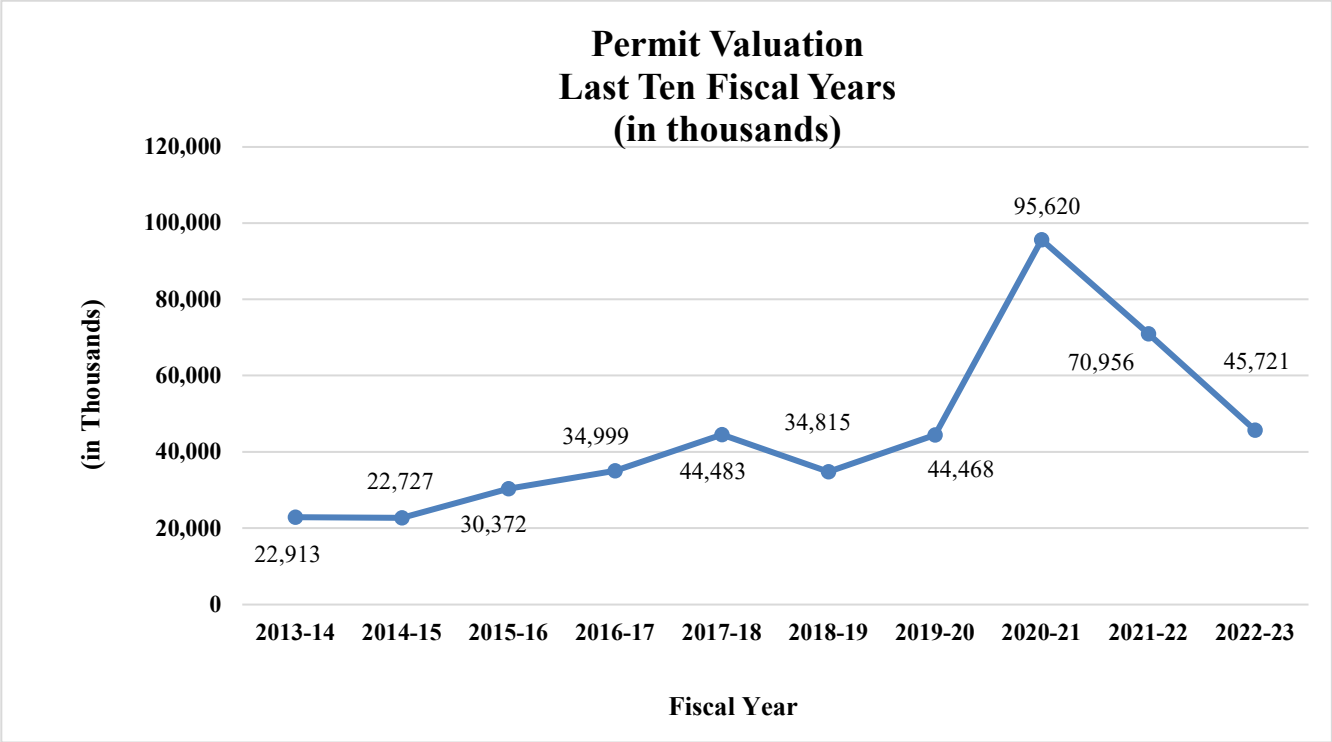

Sources: [1] City of Gardena, Community Development Department.

[2] City of Gardena-FDIC-Insured Institutions as of 06/30/2023

City of Gardena

Property Tax Rates [1] - All Overlapping Governments
Last Ten Fiscal Years
(Rate per $100 of Taxable Value)

Fiscal Year	General	Los Angeles County	Los Angeles Unified School District
2013-14	1.000000	0.000000	0.146440
2014-15	1.000000	0.000000	0.146880
2015-16	1.000000	0.000000	0.129710
2016-17	1.000000	0.000000	0.131100
2017-18	1.000000	0.000000	0.122190
2018-19	1.000000	0.000000	0.123230
2019-20	1.000000	0.000000	0.125520
2020-21	1.000000	0.000000	0.139930
2021-22	1.000000	0.000000	0.113230
2022-23	1.000000	0.000000	0.121070

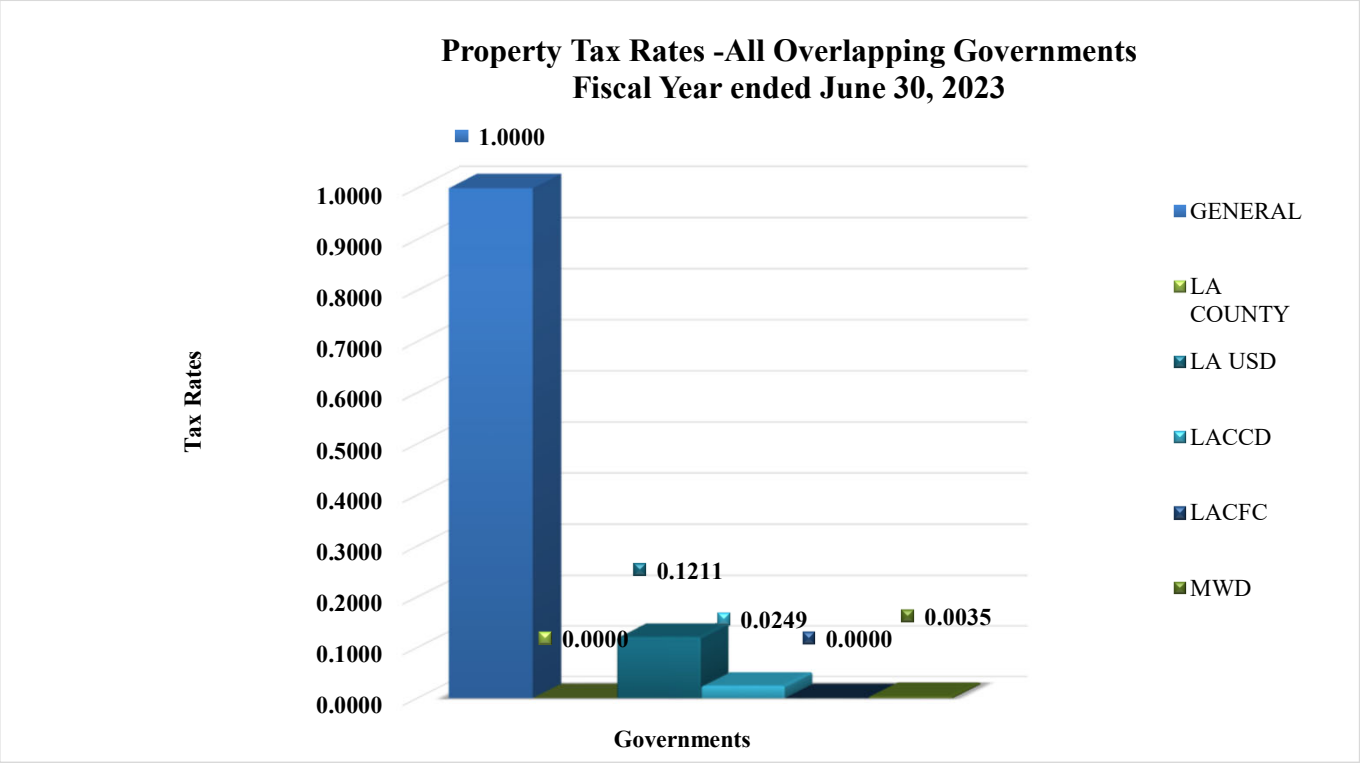

[1] Tax Rate Areas: TRA 000576

-Tax rate limit: A state constitutional amendment (Proposition 13) provided that the tax rate was limited to 1% of full cash values, levied only by the County and shared with all other jurisdictions. All other jurisdictions and the County can levy a tax rate for voter-approved debt.

Source: L.A. County Assessor 2013/14-2022/23 Combined Tax Rolls, HdL, Coren & Cone

City of Gardena

Property Tax Rates [1] - All Overlapping Governments (Continued)
Last Ten Fiscal Years
(Rate per $100 of Taxable Value)

Fiscal Year	Los Angeles Community College District	Los Angeles County Flood Control	Metropolitan Water District	Total
2013-14	0.044540	0.000000	0.003500	1.194480
2014-15	0.040170	0.000000	0.003500	1.190550
2015-16	0.035750	0.000000	0.003500	1.168960
2016-17	0.035960	0.000000	0.003500	1.170560
2017-18	0.045990	0.000000	0.003500	1.171680
2018-19	0.046210	0.000000	0.003500	1.172940
2019-20	0.027170	0.000000	0.003500	1.156190
2020-21	0.040160	0.000000	0.003500	1.183590
2021-22	0.043760	0.000000	0.003500	1.160490
2022-23	0.024880	0.000000	0.003500	1.149450

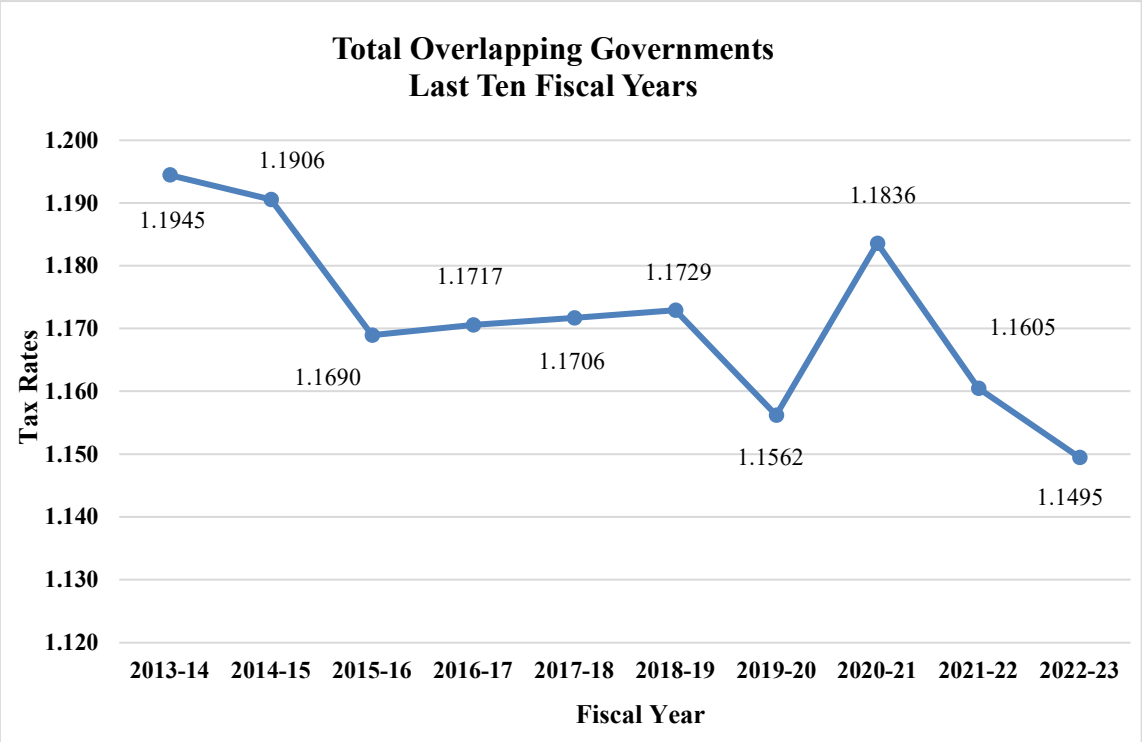

[1] Tax Rate Areas: TRA 000576

-Tax rate limit: A state constitutional amendment (Proposition 13) provided that the tax rate was limited to 1% of full cash values, levied only by the County and shared with all other jurisdictions. All other jurisdictions and the County can levy a tax rate for voter-approved debt.

Source: L.A. County Assessor 2013/14-2022/23 Combined Tax Rolls, HdL, Coren & Cone

City of Gardena
Direct and Overlapping Property Tax Rates
(rate per $100 of assessed value)
Ten Fiscal Year Detail of Rates for Largest General Fund Tax Rates Area 00576
(Proposition 13 Rate)

	FISCAL YEAR				
Agency	22-23	21-22	20-21	19-20	18-19
City of Gardena Tax District 1	0.11160 %	0.11160 %	0.11160 %	0.11160 %	0.11160 %
Children's Institutional Tuition Fund	0.00285 %	0.00285 %	0.00285 %	0.00285 %	0.00285 %
County Sanitation District No. 5 Operations	0.01256 %	0.01256 %	0.01256 %	0.01256 %	0.01256 %
County School Services	0.00144 %	0.00144 %	0.00144 %	0.00144 %	0.00144 %
County School Service Fund Los Angeles	0.00001 %	0.00001 %	0.00001 %	0.00001 %	0.00001 %
Development Center for Handicapped Minors -LA Unified School District	0.00127 %	0.00127 %	0.00127 %	0.00127 %	0.00127 %
Educational Augmentation Fund Impound	0.16240 %	0.16240 %	0.16240 %	0.16240 %	0.16240 %
Educational Augmentation Fund (ERAF) Impound	0.07820 %	0.07820 %	0.07820 %	0.07820 %	0.07820 %
LA City Community College District	0.03070 %	0.03070 %	0.03070 %	0.03070 %	0.03070 %
LA County Community College Children's Center Fund	0.00000 %	0.00032 %	0.00032 %	0.00032 %	0.00032 %
LA County Accumulative Capital Outlays	0.00012 %	0.00012 %	0.00012 %	0.00012 %	0.00012 %
LA County Fire - Ffw	0.00747 %	0.00747 %	0.00747 %	0.00747 %	0.00747 %
LA County Flood Control Dr. Improvement District	0.00178 %	0.00178 %	0.00178 %	0.00178 %	0.00178 %
LA County Library	0.02380 %	0.02380 %	0.02380 %	0.02380 %	0.02380 %
LA County Flood Control Maintenance	0.01007 %	0.01007 %	0.01007 %	0.01007 %	0.01007 %
Los Angeles Children's Center Fund	0.00371 %	0.00371 %	0.00371 %	0.00371 %	0.00371 %
LA County General	0.32520 %	0.32520 %	0.32520 %	0.32520 %	0.32520 %
Los Angeles Unified School District	0.22590 %	0.22590 %	0.22590 %	0.22590 %	0.22590 %
Greater L A Co Vector Control	0.00038 %	0.00038 %	0.00038 %	0.00038 %	0.00038 %
Water Replacement District of Southern California	0.00018 %	0.00018 %	0.00018 %	0.00018 %	0.00018 %
Total Prop. 13 Rate:	1.00000 %	1.00000 %	1.00000 %	1.00000 %	1.00000 %
TOTAL DIRECT RATE (Producing Revenue for The City)[(1)]:	0.11644 %	0.11672 %	0.11685 %	0.11711 %	0.11737 %
County of Los Angeles [(1)]	0.00000 %	0.00000 %	0.00000 %	0.00000 %	0.00000 %

Notes: General fund tax rates are representative and based upon the direct and overlapping rates for the largest General Fund tax rates area (TRA) by net taxable value.

Total Direct Rate [(1)] is weighted average of all individual direct rates applied by the government preparing the statistical section information. The percentages presented in the columns above do not sum across rows.

RDA rate is based on the largest RDA tax rate area (TRA) and includes only rate(s) from indebtedness adopted prior to 1989 per California State statute. RDA direct and overlapping rates are applied only to the incremental property values.

In 1978, California voters passed Proposition 13 which set the property tax at a 1.00% fixed amount. This 1.00% is shared by all the taxing agencies for which the subject property resides within. In addition to 1.00% fixed amount, property owners are charged taxes as a percentage of assessed property values for the payment of any voter approved bonds.

Source: [(1)] L.A. County Assessor 2013/14-2022/23 Combined Tax Rolls, HdL, Coren & Cone

City of Gardena
Direct and Overlapping Property Tax Rates (Continued)
(rate per $100 of assessed value)
Ten Fiscal Year Detail of Rates for Largest General Fund Tax Rates Area 00576
(Proposition 13 Rate)

	FISCAL YEAR				
Agency	17-18	16-17	15-16	14-15	13-14
City of Gardena Tax District 1	0.11160 %	0.11160 %	0.11160 %	0.11157 %	0.11157 %
Children's Institutional Tuition Fund	0.00285 %	0.00285 %	0.00285 %	0.00285 %	0.00285 %
County Sanitation District No. 5 Operations	0.01256 %	0.01256 %	0.01256 %	0.01256 %	0.01256 %
County School Services	0.00144 %	0.00144 %	0.00144 %	0.00144 %	0.00144 %
County School Service Fund of Angeles -LAUSD	0.00001 %	0.00001 %	0.00001 %	0.00001 %	0.00001 %
Development Center for Handicapped Minors -LA Unified School District	0.00127 %	0.00127 %	0.00127 %	0.00127 %	0.00127 %
Educational Augmentation Fund Impound	0.16240 %	0.16240 %	0.16240 %	0.16240 %	0.16240 %
Educational Augmentation Fund (ERAF) Impound	0.07820 %	0.07820 %	0.07820 %	0.07820 %	0.07820 %
LA County Community College District	0.03070 %	0.03070 %	0.03070 %	0.03070 %	0.03070 %
LA County Community College Children's Center Fund	0.00032 %	0.00032 %	0.00032 %	0.00032 %	0.00032 %
LA County Accumulative Capital Outlays	0.00012 %	0.00012 %	0.00012 %	0.00012 %	0.00012 %
LA County Fire - Ffw	0.00747 %	0.00747 %	0.00747 %	0.00747 %	0.00747 %
LA County Flood Control Improvement District	0.00178 %	0.00178 %	0.00178 %	0.00178 %	0.00178 %
LA County Library	0.02380 %	0.02380 %	0.02380 %	0.02380 %	0.02380 %
LA County Flood Control Maintenance	0.01007 %	0.01007 %	0.01007 %	0.01007 %	0.01007 %
Los Angeles Children's Center Fund	0.00371 %	0.00371 %	0.00371 %	0.00371 %	0.00371 %
LA County General	0.32520 %	0.32520 %	0.32520 %	0.32520 %	0.32520 %
Los Angeles Unified School District	0.22590 %	0.22590 %	0.22590 %	0.22590 %	0.22590 %
Greater L A Co Vector Control	0.00038 %	0.00038 %	0.00038 %	0.00038 %	0.00038 %
Water Replacement District of Southern California	0.00018 %	0.00018 %	0.00018 %	0.00018 %	0.00018 %
Total Prop. 13 Rate:	1.00000 %	1.00000 %	1.00000 %	1.00000 %	1.00000 %
TOTAL DIRECT RATE (Producing Revenue for The City) [(1)]:	0.11766 %	0.11790 %	0.11809 %	0.11837 %	0.11856 %
County of Los Angeles [(1)]	0.00000 %	0.00000 %	0.00000 %	0.00000 %	0.00000 %

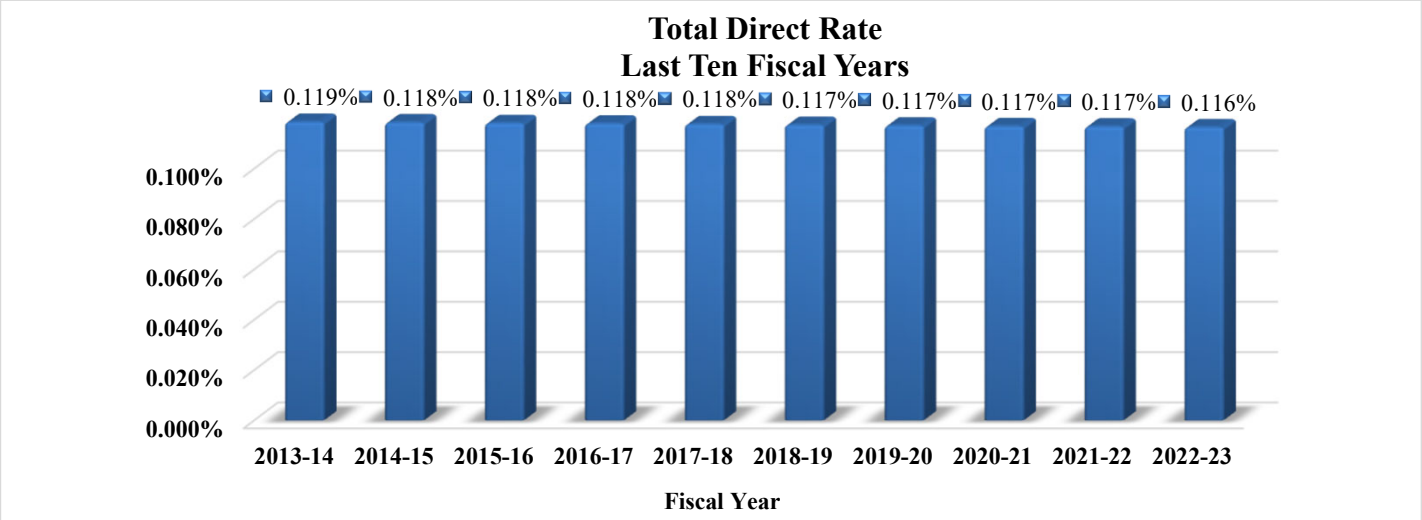

City of Gardena
Ten Largest Property Taxpayers
Current Year and Nine Years Ago

Owner/Taxpayer	Business Type	Fiscal Year 2022-23 Total Assessed Value	Fiscal Year 2022-23 Percent of Total City Assessed Value	Fiscal Year 2013-14 Total Assessed Value	Fiscal Year 2013-14 Percent of Total City Assessed Value
Nissin Foods USA Company Inc	Manufacturing	$57,461,147	0.71 %		
MPT of Gardena PHS LP	Hospital services	55,650,620	0.69		
Terreno 139th LLC	Non-residential property owners	40,261,187	0.50		
JSL Gardena LLC	Non-residential property owners	32,825,414	0.41		
14215 Normandie LLC	Property management	32,277,508	0.40		
Avcorp Composite Fabrication	Manufacturing	30,402,129	0.38		
SGL Composites Inc	Manufacturing	28,035,305	0.35		
Majestic Properties Inc	Property management	25,761,925	0.32		
PK I Garena Gateway Center LP	Retail sales	23,356,530	0.29		
Ray Pellegrino Trust	Property management	23,191,266	0.29		
Hitco Carbon Composites Inc	Manufacturing			104,864,559	2.12 %
Nissin Foods USA Company Inc	Manufacturing			58,420,769	1.18
GA HC Reit II Gardena CA Hospital LLC	Hospital services			42,000,000	0.85
JSL Gardena LLC	Non-residential property owners			28,287,948	0.57
Majestic Properties Inc	Property management			25,629,793	0.52
Brek Manufacturing Company Lessee	Manufacturing			25,389,938	0.51
Gramercy Properties LLC	Non-residential property owners			21,267,305	0.43
Target Corporation	Retail sales			20,395,329	0.41
Sams Real Estate Business Trust	Retail sales			18,395,734	0.37
Russmar Investment Corporation	Property management			18,047,106	0.36
Top Ten Totals (secured and unsecured):		**349,223,031**	**4.33 %**	**362,698,481**	**7.32 %**
All Others (secured)		**7,724,950,512**	**95.67**	**4,595,067,878**	**92.68**
Total All Assessed Valuation (secured):		**$8,074,173,543**	**100.00 %**	**$4,957,766,359**	**100.00 %**

Source: L.A. County Assessor 2013/14-2022/23 Combined Tax Rolls and the SBE Non Unitary Tax Roll

City of Gardena

Top 25 Sales Tax Producers [(1)]
(Miscellaneous Information)
Current Calendar Year and Nine Years Ago

	Calendar Year 2022		Calendar Year 2013	
	Tax Payers	Business Type	Tax Payers	Business Type
1	76	Service Stations	76	Service Stations
2	A&A Chevron	Service Stations	A&A Chevron	Service Stations
3	Albertsons	Grocery Stores	Beacon Roofing Supply	Building Materials
4	Arco AM PM	Service Stations	Crenshaw Lumber Co	Building Materials
5	Beacon Roofing Supply	Building Materials	Crenshaw Wholesale Electric Supply	Plumbing/Electrical Supplies
6	Chick Fil A	Quick-Service Restaurants	Enterprise Rent A Car	Transportation/Rentals
7	Crenshaw Lumber Co	Building Materials	Food 4 Less	Grocery Stores
8	Crenshaw Wholesale Electric Supply	Plumbing/Electrical Supplies	G & C Equipment Finders Corp	Contractors
9	Enterprise Rent A Car	Transportation/Rentals	Gardena Blue Water	Service Stations
10	Food 4 Less	Grocery Stores	Gardena Honda	New Motor Vehicle Dealers
11	G & C Equipment Finders Corp	Contractors	Gardena Nissan	New Motor Vehicle Dealers
12	Gardena Honda	New Motor Vehicle Dealers	Hitco Technologies	Heavy Industrial
13	Gardena Honda	New Motor Vehicle Dealers	Marukai Market	Grocery Stores
14	Honda Lease Trust	Auto Lease	McDonald's	Quick-Service Restaurants
15	In N Out Burger	Quick-Service Restaurants	Mobil Gardena	Service Stations
16	Marukai Market	Grocery Stores	Nader's Furniture	Home Furnishings
17	McDonald's	Quick-Service Restaurants	New York Times Sales	Light Industrial/Printers
18	Nissan of Gardena	New Motor Vehicle Dealers	Pam's Shell	Service Stations
19	Raising Cane's	Quick-Service Restaurants	Sam's Club w/Fuel	Discount Dept Stores
20	Ralphs	Grocery Stores	Samrdan Hatcher Co	Plumbing/Electrical Supplies
21	Sam's Club w/Fuel	Discount Dept Stores	Target	Discount Dept Stores
22	Smardan Hatcher Co	Plumbing/Electrical Supplies	United Oil Company	Service Stations
23	Target	Discount Dept Stores	Vons Fuel	Service Stations
24	Vons Fuel	Service Stations	Wood Oil Company	Petroleum Prod/Equipment
25	Wood Oil Company	Petroleum Prod/Equipment	Z Gallerie	Home Furnishings

-Account for 55.99% of the total sales tax collected.

-Account for 55.86% of the total sales tax collected.

*** The names are listed in alphabetical order, not sales tax volume.

Source: SBOE, CDTFA, SCO, HdL Companies

(1) Period: from January to December

City of Gardena
Property Tax Levies, Tax Collections, and Delinquency
Last Ten Fiscal Years

Fiscal Year	Taxes Levied for the Fiscal Year	COLLECTED WITHIN THE FISCAL YEAR OF LEVY		Collections in Subsequent Years	TOTAL COLLECTIONS TO DATE	
		Amount	Percent of Levy		Amount	Percent of Levy
2013-14	5,698,386	5,695,450	99.95%	2,936	5,698,386	100.00%
2014-15	5,948,939	5,946,829	99.96%	2,109	5,948,939	100.00%
2015-16	6,208,056	6,192,921	99.76%	15,134	6,208,056	100.00%
2016-17	6,447,952	6,433,016	99.77%	14,936	6,447,952	100.00%
2017-18	6,832,148	6,816,038	99.76%	16,110	6,832,148	100.00%
2018-19	7,198,451	7,164,319	99.53%	34,132	7,198,451	100.00%
2019-20	7,660,514	7,640,236	99.74%	20,278	7,660,514	100.00%
2020-21	8,233,669	8,207,649	99.68%	26,020	8,233,669	100.00%
2021-22	8,540,847	8,524,459	99.81%	16,388	8,540,847	100.00%
2022-23	9,123,832	9,071,698	99.43%	52,134	9,123,832	100.00%

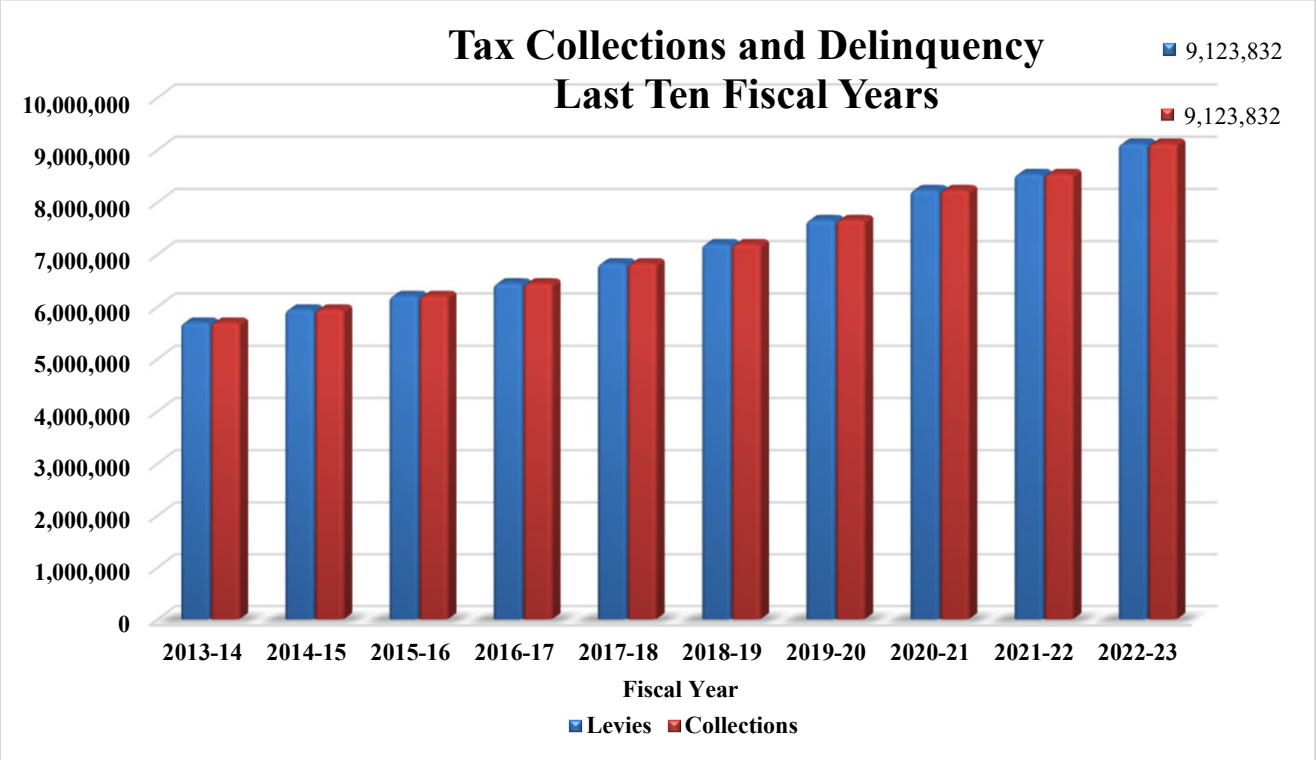

NOTE: Article XIII-A of the Constitution of the State of California adopted by the electorate in June 1978, precludes the City from a local property tax levy. All general-purpose property taxes are levied by the County and allocated to other governmental entities on a predetermined formula.

Sources: City of Gardena, Administrative Services Department - Finance Division

City of Gardena
Card Club Gross Revenue Fee
Last Ten Fiscal Years

Fiscal Year	Card Club Revenue [1]	General Fund Gross Revenue	Percent of General Fund Revenue
2013-14	9,467,078	51,004,568	18.56%
2014-15	9,517,550	54,413,202	17.49%
2015-16	9,057,202	54,092,710	16.74%
2016-17	8,975,991	56,237,621	15.96%
2017-18	8,071,001	55,972,281	14.42%
2018-19	8,101,583	60,267,575	13.44%
2019-20	4,718,691	55,906,560	8.44%
2020-21	4,154,913	79,772,701	5.21%
2021-22	10,544,948	80,865,048	13.04%
2022-23	8,633,145	83,114,369	10.39%

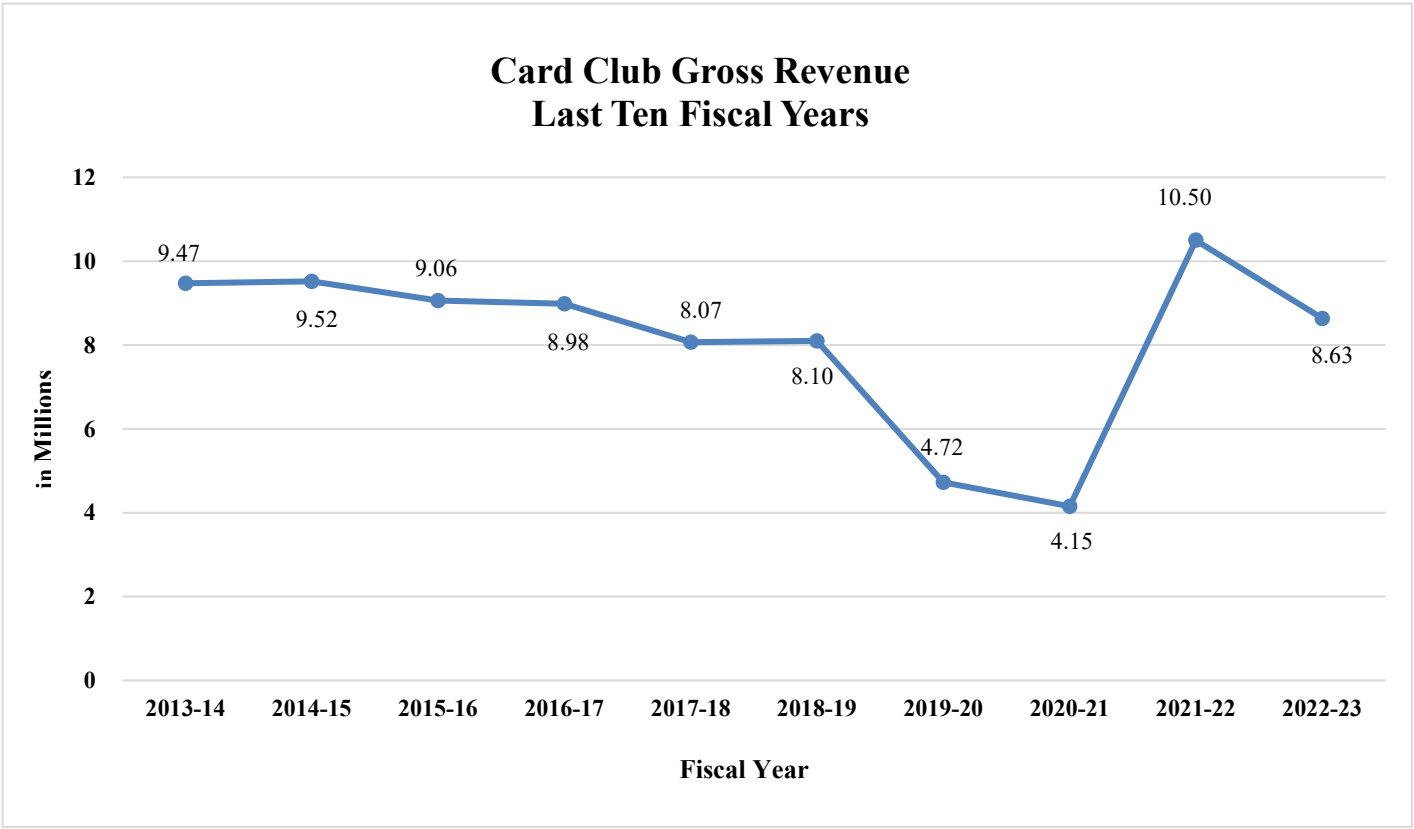

[1] Two card clubs: Lucky Lady Casino & Hustler Casino
City receives 12% of the total monthly gross revenue of the card game business.

City of Gardena
Utility Users Tax Received
Last Five Fiscal Years

	Fiscal Year Ended June 30				
	2023	2022	2021	2020	2019
Utility Users Tax Electric	$ 3,072,555	$ 2,584,392	$ 2,331,492	$ 2,110,227	$ 2,215,028
Utility Users Tax Gas	1,177,694	837,674	648,472	616,341	585,308
Utility Users Tax Electric Service Provider	324,189	323,978	199,496	217,700	171,490
Utility Users Tax Gas-Non Core	127,587	111,839	88,421	91,533	90,338
UUT-Mobile/Cellular Telephones	240,469	216,708	181,548	313,603	425,866
UUT-Long Distance Telephone/Non Cellular	439,504	417,966	458,602	490,588	535,347
Utility Users Tax Water	898,171	930,300	947,276	902,866	859,531
UUT-Prepaid Mobile Telephone	37,681	58,537	115,493	58,372	72,738
TOTAL	$ 6,317,851	$ 5,481,395	$ 4,970,799	$ 4,801,230	$ 4,955,645

Sources: City of Gardena, Administrative Services Department - Finance Division

City of Gardena
Taxable Sales by Category
Calendar Years 2018 through 2022
(in thousands)

	2022	2021	2020	2019	2018
Apparel Stores	$ 12,949	$ 13,672	$ 9,294	$ 12,209	$ 11,198
General Merchandise	167,192	152,741	127,475	125,857	94,324
Food Stores	48,848	46,211	47,768	43,371	42,878
Eating and Drinking Places	234,938	208,968	169,214	193,841	177,599
Building Materials	269,039	239,730	167,875	151,241	186,340
Auto Dealers and Supplies	164,795	161,851	135,897	152,752	146,417
Service Stations	117,173	92,424	68,200	93,644	93,104
Other Retail Stores	84,895	95,332	89,564	86,799	83,241
All Other Outlets	464,851	405,954	149,872	192,907	214,047
TOTAL	$ 1,564,680	$ 1,416,883	$ 965,159	$ 1,052,621	$ 1,049,148

Source: State Board of Equalization, California Department of Taxes and Fees Administration, State Controller's Office, HdL Companies

City of Gardena
Ratio of Outstanding Debt by Type
Last Ten Fiscal Years

		GOVERNMENTAL ACTIVITIES								
Fiscal Year	Population [1]	Certificates of Participation [2]	Revenue Bonds	Pension Obligation Bonds	Leases Payable	Loan Payable	Subscription Liabilities	Direct Purchase Lease	Other	Total
2013-14	60,082	21,455,000	2,095,000	-	130,661	2,521,577	-	-	-	26,202,238
2014-15	60,414	12,370,000	10,835,639	-	67,125	2,930,317	-	-	-	26,203,081
2015-16	60,785	11,770,000	10,764,523	-	-	3,114,763	-	-	124,548	25,773,834
2016-17	60,721	9,170,000	10,688,407	-	-	3,200,986	-	1,635,000	111,443	24,805,836
2017-18	61,246	8,710,000	10,552,291	-	-	3,287,209	-	1,635,000	93,545	24,278,045
2018-19	61,042	8,220,000	10,411,175	-	-	3,373,432	-	1,390,000	80,741	23,475,348
2019-20	60,937	7,700,000	10,260,059	-	-	3,459,655	-	1,120,000	68,045	22,607,759
2020-21	60,344	7,150,000	10,103,943	79,029,723	381,696	3,545,880	-	845,000	53,749	101,109,991
2021-22	59,947	6,565,000	24,826,484	76,692,725	337,409	3,632,103	755,138	565,000	43,361	113,417,220
2022-23	59,809	5,940,000	24,108,714	73,832,926	459,635	3,718,327	1,032,161	285,000	29,065	109,405,828

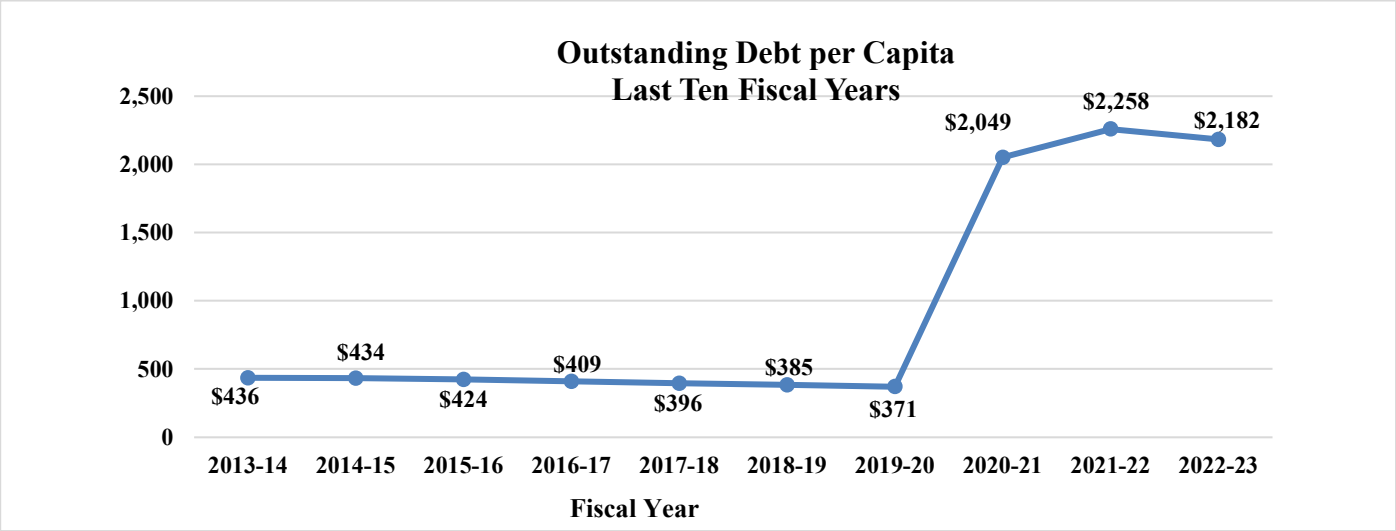

NOTES:

[1] State of California, Finance Department

[2] The City of Gardena had 6 Certificates of Participations at the end of fiscal year 1996-97. At the end of fiscal year 2005-06, there were only two Certificates of Participation Series 2001A and 2006AB&C. During the fiscal year 2005-06, the City refunded the Certificates of Participation Series 1994 and 1999 A & B by Series 2006 A B & C.

In fiscal year 2006-07, the City refunded Certificates of Participation Series 2001A by the Refunding Revenue COPs series 2007A.

In fiscal year 2014-15, the City refunded Certificates of Participation Series 2006 B by the Taxable Lease Revenue Refunding Bonds 2014.

In fiscal year 2016-17, the City refunded Certificates of Participation Series 2006 C by the 2017 Direct Purchase Lease.

-Refer to Notes in the Financial Statement for details of the City's outstanding debt

[3] Assessed value has been used because the actual value of taxable property is not readily available in the State of California

[4] Income data was provided by HDL Coren & Cone using City of Gardena Average per Capita Personal Income.

Sources: City of Gardena, Administrative Services Department - Finance Division
County of Los Angeles, Auditor-Controller Office/Tax Division
HdL Coren & Cone

City of Gardena
Ratio of Outstanding Debt by Type (Continued)
Last Ten Fiscal Years

Fiscal Year	BUSINESS-TYPE ACTIVITIES				Taxable Assessed Value [3]	Percent of Taxable Assessed Value	Debt per Capita	Average per Capita Personal Income [4]	Percent of Debt by Personal Income
	Pension Obligation Bonds	Lease Payable	Subscription Liabilities	Total					
2013-14	-	-	-	-	4,957,766,359	0.53%	436	23,037	1.89%
2014-15	-	-	-	-	5,170,329,875	0.51%	434	23,032	1.88%
2015-16	-	-	-	-	5,453,097,097	0.47%	424	22,808	1.86%
2016-17	-	-	-	-	5,686,952,300	0.44%	409	23,246	1.76%
2017-18	-	-	-	-	6,005,395,708	0.40%	396	23,584	1.68%
2018-19	-	-	-	-	6,397,613,521	0.37%	385	24,282	1.58%
2019-20	-	-	-	-	6,800,580,594	0.33%	371	25,991	1.43%
2020-21	22,250,277	304,112	-	22,554,389	7,223,980,473	1.71%	2,049	27,372	7.49%
2021-22	21,592,275	158,923	205,064	21,956,262	7,508,508,782	1.80%	2,258	28,211	8.00%
2022-23	20,787,074	13,353	279,567	21,079,994	8,074,173,543	1.62%	2,182	30,493	7.15%

NOTES:

[1] State of California, Finance Department

[2] The City of Gardena had 6 Certificates of Participations at the end of fiscal year 1996-97. At the end of fiscal year 2005-06, there were only two Certificates of Participation Series 2001A and 2006AB&C. During the fiscal year 2005-06, the City refunded the Certificates of Participation Series 1994 and 1999 A & B by Series 2006 A B & C.

In fiscal year 2006-07, the City refunded Certificates of Participation Series 2001A by the Refunding Revenue COPs series 2007A.

In fiscal year 2014-15, the City refunded Certificates of Participation Series 2006 B by the Taxable Lease Revenue Refunding Bonds 2014.

In fiscal year 2016-17, the City refunded Certificates of Participation Series 2006 C by the 2017 Direct Purchase Lease.

-Refer to Notes in the Financial Statement for details of the City's outstanding debt

[3] Assessed value has been used because the actual value of taxable property is not readily available in the State of California

[4] Income data was provided by HDL Coren & Cone using City of Gardena Average per Capita Personal Income.

Sources: City of Gardena, Administrative Services Department - Finance Division
County of Los Angeles, Auditor-Controller Office/Tax Division

City of Gardena

Annual Comprehensive Financial Report
For the Year Ended June 30, 2023

(***This page is intentionally left blank)***

City of Gardena
Pledged-Revenue Coverage
Last Five Fiscal Years

Fiscal Year	Revenue	Operating Expenses	Net Available Revenue	Refunding Certificates of Participation [1] Debt Service Principal	Refunding Certificates of Participation [1] Debt Service Interest	Percent Coverage
2018-19	60,267,575	67,269,131	(7,001,556)	100,000	88,075	(37.23)
2019-20	55,906,560	61,786,869	(5,880,309)	105,000	83,075	(31.27)
2020-21	79,772,701	61,625,048	18,147,653	110,000	77,825	96.62
2021-22	80,865,048	67,821,502	13,043,546	115,000	72,325	69.63
2022-23	84,162,512	75,849,689	8,312,823	120,000	66,575	44.55

NOTES:

[1] **On January 24, 2007, the City issued the Refunding Revenue Bonds, Series 2007A to refund the Certificates of Participation Series 2001A. No principal and interest were paid during the fiscal year 2006-07.**

-Details regarding the City's outstanding debt can be found in the notes to the financial statements.

-Shortfall in net available revenue was covered by the general fund balance

Sources: City of Gardena, Administrative Services Department - Finance Division

City of Gardena
Ratio of General Bonded Debt Outstanding
Last Ten Fiscal Years

Fiscal Year	Population [1]	OUTSTANDING GENERAL BONDED DEBT				Total	Taxable Assessed Value	Percent of Taxable Assessed Value	Debt per Capita
		Certificates of Participation	Less: Amounts Available in Debt Service Fund [2]	Pension Obligation Bonds	Less: Amounts Available in Debt Service Fund [3]				
2013-14	60,082	21,455,000	570,000	-	-	20,885,000	4,784,812,315	0.44%	348
2014-15	60,414	12,370,000	600,000	-	-	11,770,000	4,957,766,359	0.24%	195
2015-16	60,785	11,770,000	640,000	-	-	11,130,000	5,170,329,875	0.22%	183
2016-17	60,721	9,170,000	460,000	-	-	8,710,000	5,453,097,097	0.16%	143
2017-18	61,246	8,710,000	490,000	-	-	8,220,000	5,686,952,300	0.14%	134
2018-19	61,042	8,220,000	520,000	-	-	7,700,000	6,397,613,521	0.12%	126
2019-20	60,937	7,700,000	550,000	-	-	7,150,000	6,800,580,594	0.11%	117
2020-21	60,344	7,150,000	585,000	101,280,000	2,995,000	104,850,000	7,223,980,473	1.45%	1,738
2021-22	59,947	6,565,000	625,000	98,285,000	3,665,001	100,559,999	7,508,508,782	1.34%	1,677
2022-23	59,809	5,940,000	665,000	94,620,000	4,210,000	95,685,000	8,074,173,543	1.19%	1,600

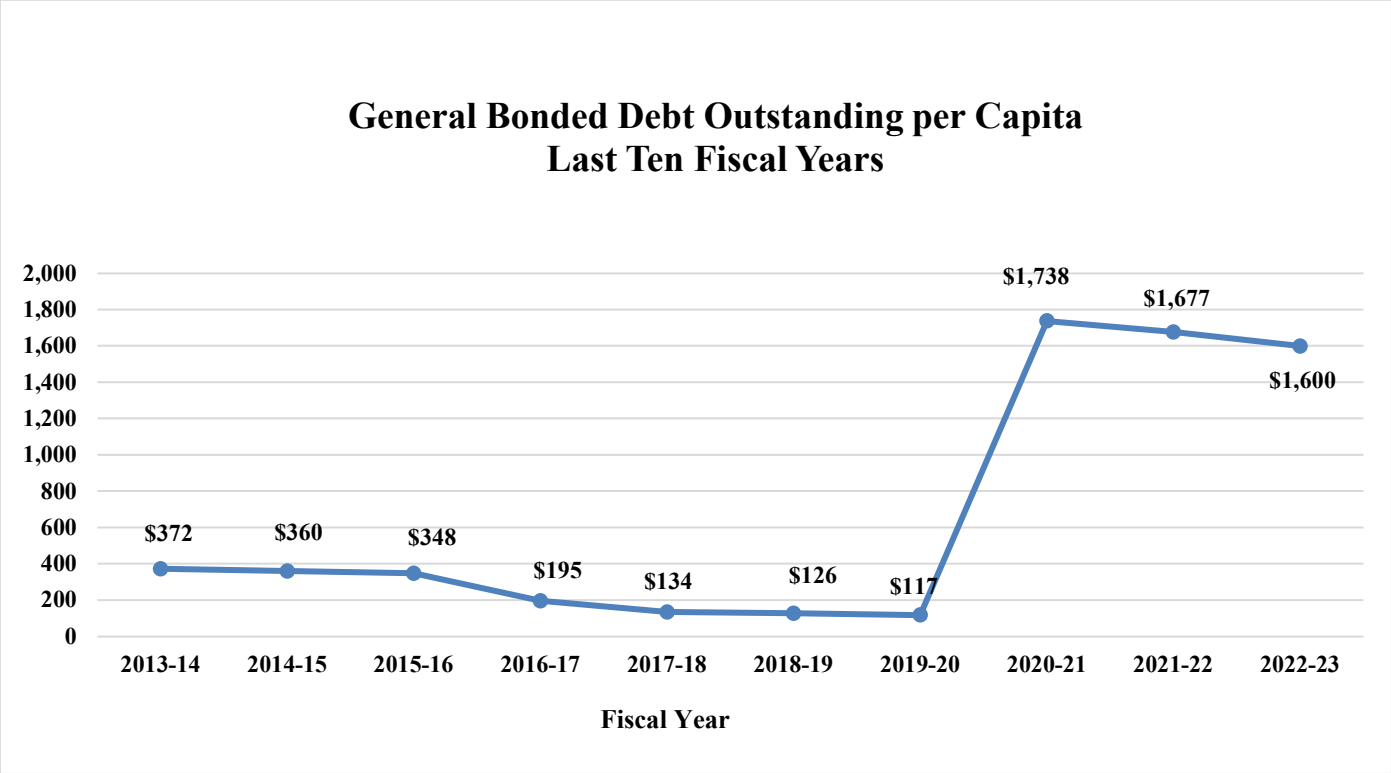

Source: [1] State of California, Finance Department.

[2] This is the amount for the COP debt service principal payments in the current fiscal year.

[3] This is the amount for the POB debt service principal payments in the current fiscal year.

City of Gardena
Direct and Overlapping Bonded Debt
June 30, 2023

2022-23 Assessed Valuation: **$8,074,173,543**

Overlapping Tax and Assessment Debt:	**Total Debt 06/30/2023**	**Percent Applicable To City** [(1)]	**City's Share of Debt 06/30/2023**
Metropolitan Water District	$ 19,215,000	0.222 %	$ 42,657
Los Angeles Community College District	4,500,730,000	0.753 %	33,890,497
Los Angeles Unified School District	10,704,725,000	0.920 %	98,483,470
California Statewide Communities Development Authority 1915 Act Bonds	6,375,000	100.000 %	6,375,000
TOTAL GROSS OVERLAPPING TAX AND ASSESSMENT DEBT			$ 138,791,624
Less: Los Angeles Unified School District supported general obligation bonds			2,755,183
TOTAL NET OVERLAPPING TAX AND ASSESSMENT DEBT			$ 136,036,441
Direct and Overlapping General Fund Debt			
Los Angeles County General Fund Obligations	$ 2,601,551,282	0.426 %	$ 11,082,608
Los Angeles County Superintendent of Schools Certificates of Participation	3,403,487	0.426 %	14,499
Los Angeles Unified School District Certificates of Participation	97,870,000	0.920 %	900,404
City of Gardena General Fund Obligations	28,610,000	100.000 %	28,610,000
City of Gardena Pension Obligation Bonds	94,620,000	100.000 %	94,620,000
Los Angeles County Sanitation District No. 5 Authority	1,269,835	5.971 %	75,822
TOTAL DIRECT AND OVERLAPPING GENERAL FUND DEBT			$ 135,303,333
TOTAL DIRECT DEBT			$ 123,230,000
TOTAL GROSS OVERLAPPING DEBT			$ 150,864,957
TOTAL NET OVERLAPPING DEBT			$ 148,109,774
GROSS COMBINED TOTAL DEBT			$ 274,094,957 [(2)]
NET COMBINED TOTAL DEBT			$ 271,339,774

(1) The percentage of overlapping debt applicable to the City is estimated using taxable property value. Applicable percentages were estimated by determining the portion of the overlapping district's assessed value that is within the boundaries of the City divided by the district's total taxable assessed value.

(2) Excludes tax and revenue anticipation notes, enterprise revenue, mortgage revenue, non-bonded capital lease obligations, and sales tax revenue bonds.

Ratios to 2022-23 Assessed Valuation:

Direct Debt ($123,230,000)….	1.53%
Total Gross Overlapping Tax and Assessment Debt….	1.72%
Total Net Overlapping Tax and Assessment Debt….	1.68%
Gross Combined Total Debt….	3.39%
Net Combined Total Debt….	3.36%

City of Gardena
Legal Debt Margin Information
Last Ten Fiscal Years

	Fiscal Year				
	21-22	**21-22**	**20-21**	**19-20**	**18-19**
Assessed valuation	$8,074,173,543	$7,508,508,782	$7,223,980,473	$6,800,580,594	$6,397,613,521
Conversion percentage	25%	25%	25%	25%	25%
Adjusted assessed valuation	2,018,543,386	1,877,127,196	1,805,995,118	1,700,145,149	1,599,403,380
Debt limit percentage	15%	15%	15%	15%	15%
Debt limit	$302,781,508	$281,569,079	$270,899,268	$255,021,772	$239,910,507
Total net debt applicable to limit:					
General obligation bonds	-	-	-	-	-
Legal debt margin	$302,781,508	$281,569,079	$270,899,268	$255,021,772	$239,910,507
Total debt applicable to the limit as a percentage of debt limit	- 0%	- 0%	- 0%	- 0%	- 0%

Section 43605 of the Government Code of the State of California provides for a legal debt limit of 15% of gross assessed valuation. However, this provision was enacted when assessed valuation was based upon 25% OF MARKET VALUE. Effective with 1981-82 fiscal year, each parcel is now assessed at 100% of market value (as of the most recent change in ownership for that parcel). The Computations shown above reflect a conversion of assessed valuation data for each fiscal year from current full valuation perspective to the 25% level that was in effect at the time the legal debt margin was enacted by the State of California for local governments located within the State.

Source: City of Gardena, Administrative Services Department - Finance Division

City of Gardena
Legal Debt Margin Information (Continued)
Last Ten Fiscal Years

	Fiscal Year				
	17-18	16-17	15-16	14-15	13-14
Assessed valuation	$6,005,395,708	$5,686,952,300	$5,453,097,097	$5,170,329,875	$4,957,766,359
Conversion percentage	25%	25%	25%	25%	25%
Adjusted assessed valuation	1,501,348,927	1,421,738,075	1,363,274,274	1,292,582,469	1,239,441,590
Debt limit percentage	15%	15%	15%	15%	15%
Debt limit	$225,202,339	$213,260,711	$204,491,141	$193,887,370	$185,916,238
Total net debt applicable to limit:					
General obligation bonds	-	-	-	-	-
Legal debt margin	$225,202,339	$213,260,711	$204,491,141	$193,887,370	$185,916,238
Total debt applicable to the limit as a percentage of debt limit	- 0%	- 0%	- 0%	- 0%	- 0%

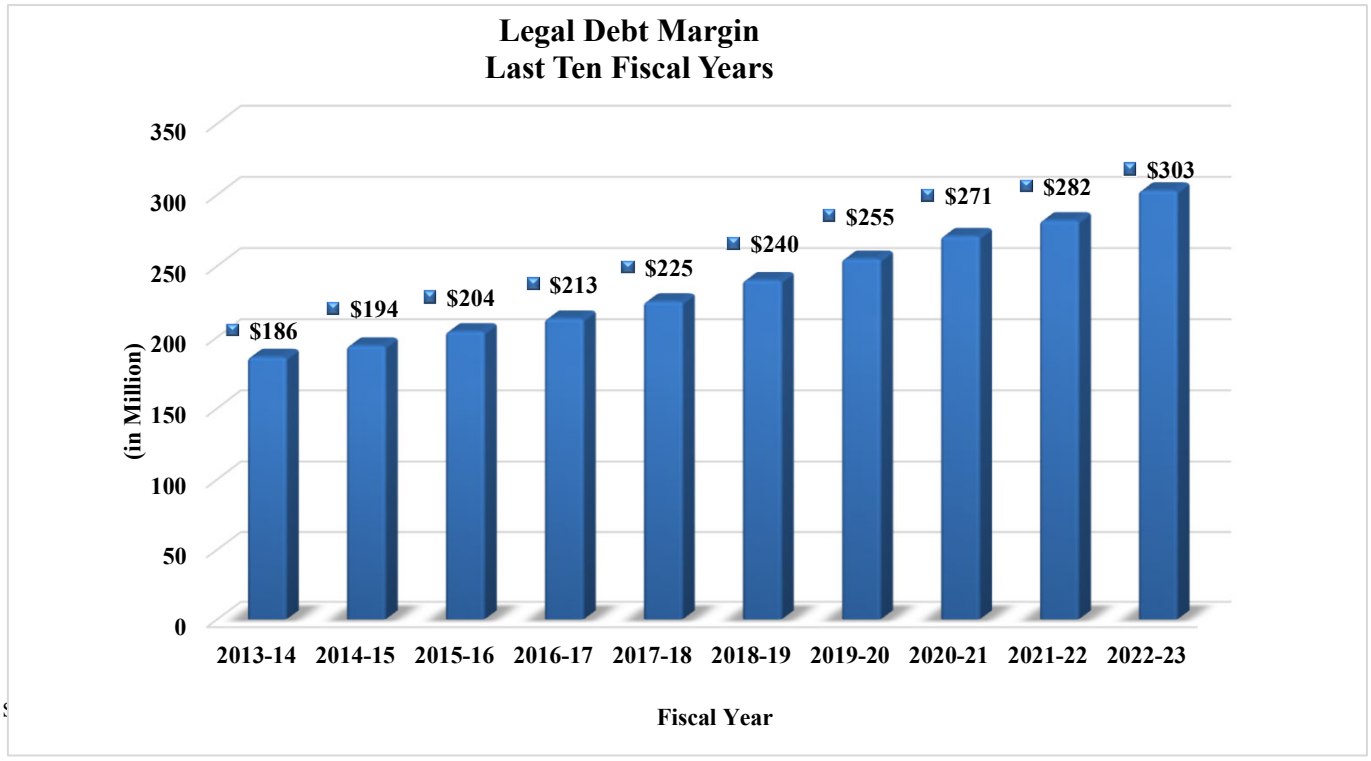

City of Gardena
Debt Service Payment Schedule

FISCAL YEAR	2006 A REF COPS			2014 TAXABLE LEASE BONDS			2007A REV REF BONDS		
	PRINCIPAL	INTEREST	TOTAL	PRINCIPAL	INTEREST	TOTAL	PRINCIPAL	INTEREST	TOTAL
2022-2023	$ 625,000	$ 398,910	$ 1,023,910	$ 65,000	$ 438,366	$ 503,366	$ 120,000	$ 66,575	$ 186,575
2023-2024	665,000	357,759	1,022,759	70,000	435,799	505,799	125,000	60,575	185,575
2024-2025	705,000	314,056	1,019,056	70,000	433,034	503,034	130,000	54,325	184,325
2025-2026	750,000	267,641	1,017,641	75,000	429,709	504,709	135,000	47,825	182,825
2026-2027	800,000	218,196	1,018,196	75,000	426,148	501,148	145,000	41,075	186,075
2027-2028	850,000	165,561	1,015,561	80,000	422,586	502,586	155,000	33,825	188,825
2028-2029	905,000	109,577	1,014,577	85,000	418,787	503,787	160,000	25,881	185,881
2029-2030	965,000	49,924	1,014,924	815,000	414,750	1,229,750	170,000	17,681	187,681
2030-2031	300,000	9,570	309,570	1,175,000	374,000	1,549,000	175,000	8,969	183,969
2031-2032				1,235,000	315,250	1,550,250			
2032-2033				1,295,000	253,500	1,548,500			
2033-2034				1,355,000	188,750	1,543,750			
2034-2035				1,430,000	121,000	1,551,000			
2035-2036				990,000	49,500	1,039,500			
2036-2037									
2037-2038									
2038-2039									
2039-2040									
2040-2041									
TOTAL	**$ 6,565,000**	**$ 1,891,192**	**$ 8,456,192**	**$ 8,815,000**	**$ 4,721,178**	**$13,536,178**	**$ 1,315,000**	**$ 356,731**	**$ 1,671,731**

City of Gardena
Debt Service Payment Schedule (Continued)

FISCAL YEAR	2017 DIRECT LEASE			) TAXABLE PENSION OBLIGATION BO			2021 LEASE REVENUE BONDS		
	PRINCIPAL	INTEREST	TOTAL	PRINCIPAL	INTEREST	TOTAL	PRINCIPAL	INTEREST	TOTAL
2022-2023	$ 280,000	$ 8,798	$ 288,798	$ 3,665,000	$ 2,938,951	$ 6,603,951	$ 440,000	$ 498,000	$ 938,000
2023-2024	285,000	2,950	287,950	4,210,000	2,891,196	7,101,196	465,000	476,000	941,000
2024-2025				4,800,000	2,827,962	7,627,962	490,000	452,750	942,750
2025-2026				5,075,000	2,746,266	7,821,266	510,000	428,250	938,250
2026-2027				5,175,000	2,641,416	7,816,416	540,000	402,750	942,750
2027-2028				5,295,000	2,518,976	7,813,976	565,000	375,750	940,750
2028-2029				5,440,000	2,377,970	7,817,970	595,000	347,500	942,500
2029-2030				5,590,000	2,227,663	7,817,663	620,000	317,750	937,750
2030-2031				5,750,000	2,067,621	7,817,621	655,000	286,750	941,750
2031-2032				5,920,000	1,897,249	7,817,249	685,000	254,000	939,000
2032-2033				6,105,000	1,714,143	7,819,143	715,000	226,600	941,600
2033-2034				6,295,000	1,521,042	7,816,042	740,000	198,000	938,000
2034-2035				6,500,000	1,315,636	7,815,636	765,000	175,800	940,800
2035-2036				6,720,000	1,097,041	7,817,041	790,000	152,850	942,850
2036-2037				6,975,000	838,052	7,813,052	810,000	129,150	939,150
2037-2038				7,245,000	569,236	7,814,236	835,000	104,850	939,850
2038-2039				7,525,000	290,014	7,815,014	860,000	79,800	939,800
2039-2040							885,000	54,000	939,000
2040-2041							915,000	27,450	942,450
TOTAL	**$ 565,000**	**$ 11,747**	**$ 576,747**	**$98,285,000**	**$32,480,434**	**$130,765,434**	**$12,880,000**	**$ 4,988,000**	**$17,868,000**

City of Gardena
Debt Service Payment Schedule (Continued)

FISCAL YEAR	ANNUAL BOND OBLIGATIONS		
	PRINCIPAL	INTEREST	TOTAL
2022-2023	$ 5,195,000	$ 4,349,599	$ 9,544,599
2023-2024	5,820,000	4,224,278	10,044,278
2024-2025	6,195,000	4,082,126	10,277,126
2025-2026	6,545,000	3,919,691	10,464,691
2026-2027	6,735,000	3,729,585	10,464,585
2027-2028	6,945,000	3,516,698	10,461,698
2028-2029	7,185,000	3,279,715	10,464,715
2029-2030	8,160,000	3,027,768	11,187,768
2030-2031	8,055,000	2,746,910	10,801,910
2031-2032	7,840,000	2,466,499	10,306,499
2032-2033	8,115,000	2,194,243	10,309,243
2033-2034	8,390,000	1,907,792	10,297,792
2034-2035	8,695,000	1,612,436	10,307,436
2035-2036	8,500,000	1,299,391	9,799,391
2036-2037	7,785,000	967,202	8,752,202
2037-2038	8,080,000	674,086	8,754,086
2038-2039	8,385,000	369,814	8,754,814
2039-2040	885,000	54,000	939,000
2040-2041	915,000	27,450	942,450
TOTAL	**$128,425,000**	**$ 44,449,282**	**$172,874,282**

City of Gardena
Demographic and Economic Statistics
Last Ten Calendar Years

Year	City of Gardena Housing Units	City of Gardena Population [1]	Average Annual Percentage Increase	Los Angeles County Population [1]	Average Annual Percentage Increase	Gardena Personal Income (1,000s) [2]	Per Capita Personal Income [2]	LAUSD Enrollment [3]	Gardena Employment [4]	Gardena Unemployment Rate [4]
2014	21,629	60,082	0.87%	10,041,797	0.84%	1,384,109	23,037	651,322	27,700	8.20%
2015	21,649	60,414	0.55%	10,136,559	0.94%	1,384,454	23,032	643,493	28,200	6.70%
2016	21,714	60,785	0.61%	10,400,000	2.60%	1,386,384	22,808	664,774	29,000	5.20%
2017	21,815	60,721	-0.11%	10,271,018	-1.24%	1,411,571	23,246	713,871	29,500	4.40%
2018	21,815	61,246	0.86%	10,163,507	-1.05%	1,444,440	23,584	694,096	29,300	4.80%
2019	22,092	61,042	-0.33%	10,105,518	-0.57%	1,482,260	24,282	673,849	29,000	4.70%
2020	22,137	60,937	-0.17%	10,079,000	-0.26%	1,583,855	25,991	464,731	24,900	4.50%
2021	22,371	60,344	-0.97%	10,044,458	-0.34%	1,651,792	27,372	628,468	27,400	9.80%
2022	22,761	59,947	-0.66%	9,861,224	-1.82%	1,691,219	28,211	565,479	27,900	4.80%
2023	22,933	59,809	-0.23%	9,761,210	-1.01%	1,823,814	30,493	563,083	27,900	4.80%

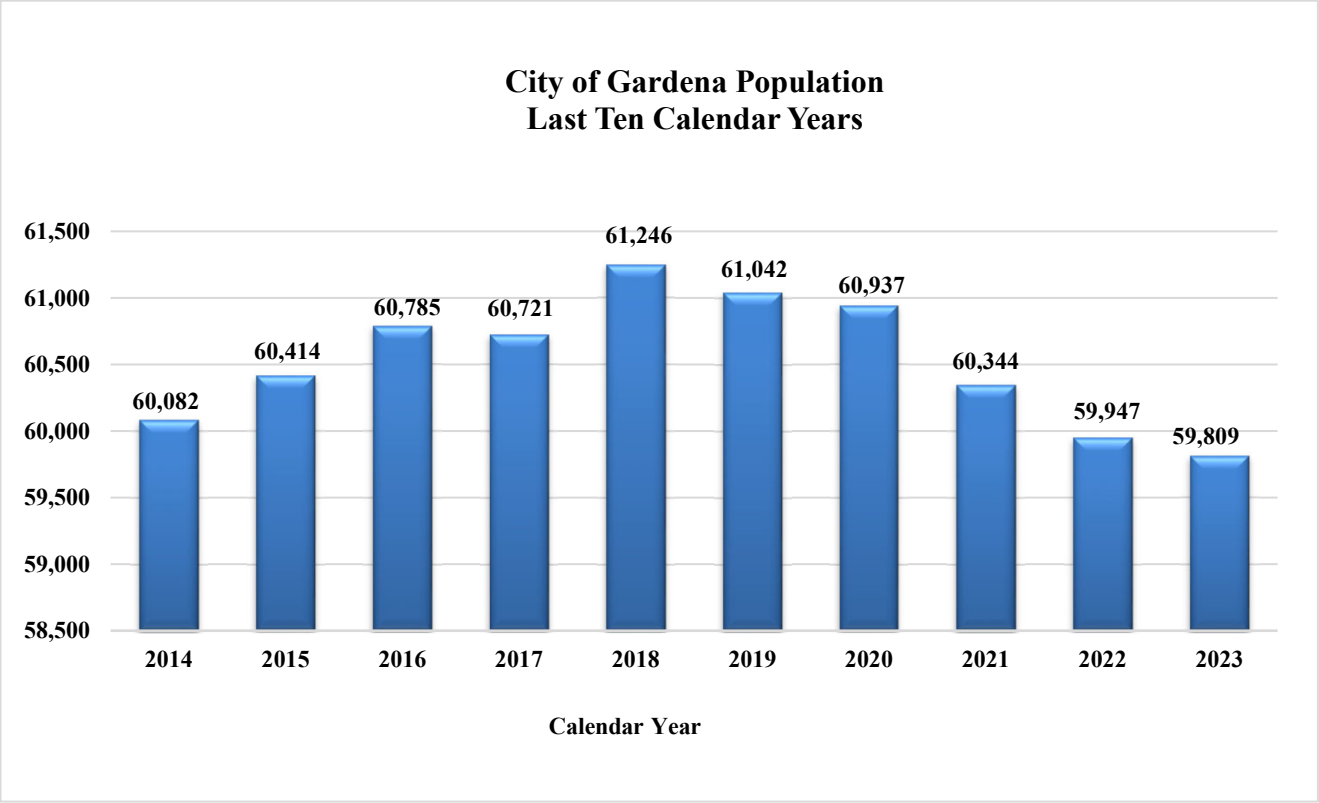

NOTES:

[1] State of California, Finance Department.

[2] Income data was provided by HDL Coren & Cone using City of Gardena Average per Capita Personal Income.

[3] Student Enrollment is from LAUSD website. LAUSD does not have breakdown per City count.

[4] Employment and Unemployment rates are provided by the EDD's Labor Market Information Division.

City of Gardena
Ten Principal Employers
Current Year and Nine Years Ago

Employer	Business Type	2020*		2014	
		Number of Employees	Percent of Total Employment	Number of Employees	Percent of Total Employment
United Parcel Service Inc.	Delivery	789	2.83%		
Gardena Memorial Hospital	Hospital services	750	2.69%		
Nissin Foods Company	Manufacturing	550	1.97%		
Hustler Casino	Casino	465	1.67%		
Air Fayre	Airline caterers	289	1.04%		
Avcorp	Manufacturing parts	289	1.04%		
Larry Flynt's Lucky Lady Casino	Casino	245	0.88%		
Southwest Offset Printing	Book binding and printing	235	0.84%		
Kindred Hospital South Bay	Hospital services	225	0.81%		
Target	Retail	200	0.72%		
Hustler Casino	Casino			744	2.69%
Gardena Memorial Hospital	Hospital services			740	2.67%
United Parcel Service Inc.	Delivery			348	1.26%
Hitco Carbon Composites, Inc.	Manufacturing parts			486	1.75%
Normandie Club, LP	Casino			430	1.55%
Southwest Offset Printing	Book binding and printing			365	1.32%
Target	Retail			217	0.78%
Ramona's Mexican Food	Food			150	0.54%
Sam's Club	Retail			150	0.54%
Gardena Honda	Auto Sales			122	0.44%
Total top ten employers		4,037		3,752	
Total City Employment[1]		27,900		27,700	

*Used 2020 employment data as 2023 was unavailable

NOTE: Non-Governmental Employers.

Several potential businesses that may qualify for Top 10 ranking. However, current employee counts were unattainable at the time of report preparation. Previous historical data is not available.

[1]Total City employment provided by EDD-Labor Market Information Division.

SOURCE: Economic Development Staff

City of Gardena
Unemployment Rates
Last Five Calendar Years

Employment

The following table shows unemployment information for the United States (the "Federal"), California (the "State"), Los Angeles County (the "County") and the City of Gardena (the "City") for calendar years 2018 through 2022.

	2023	2022	2021	2020	2019
Federal Unemployment Rate	3.8%	3.5%	4.8%	8.4%	3.7%
State Unemployment Rate	4.6	3.9	6.4	10.8	4.0
County Unemployment Rate	5.0	4.8	9.7	15.1	4.5
City Unemployment Rate	4.7	4.8	9.8	15.2	4.7

Source: State of California Employment Development Department; Los Angeles-Long Beach Metropolitan Statistical Area and United States Bureau of Labor Statistics.

City of Gardena
Full-Time and Part-Time City Employees
by Function
Last Ten Fiscal Years

	Fiscal Year									
Function	**2022-23**	**2021-22**	**2020-21**	**2019-20**	**2018-19**	**2017-18**	**2016-17**	**2015-16**	**2014-15**	**2013-14**
General government	130	120	115	151	181	209	186	181	181	181
Public safety	125	124	126	149	140	142	154	160	157	162
Public works	45	46	44	56	47	31	51	50	50	47
Community development	21	15	12	15	18	15	19	18	17	16
Transit - Bus line	143	141	136	165	148	140	140	144	147	143
Total	464	446	433	536	534	537	550	553	552	549

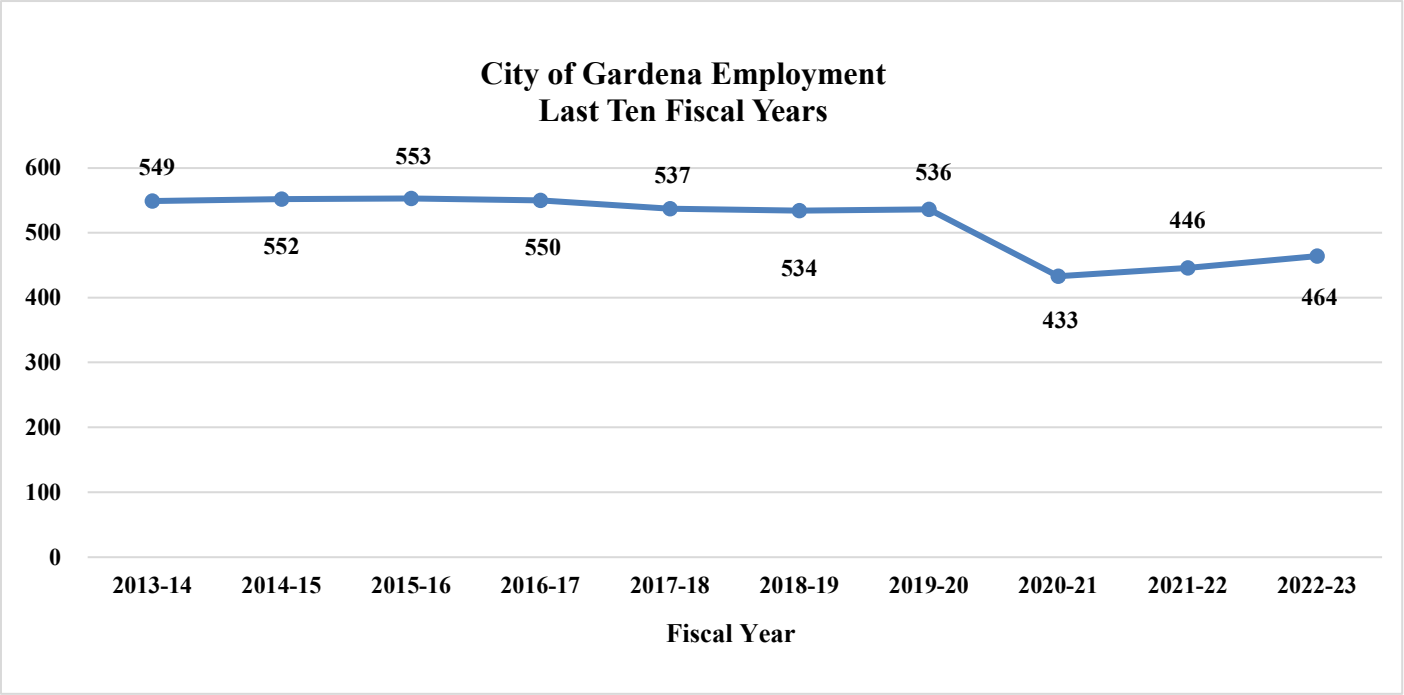

Source: City of Gardena, Administrative Services Department - Finance Division

City of Gardena
Employee Union Representation

Name of Union	Number of Employees Represented as of June 30, 2023	Number of Employees Represented as of June 30, 2022	Number of Employees Represented as of June 30, 2021	Number of Employees Represented as of June 30, 2020	Expiration of Contract
Gardena Municipal Employees Association	239	224	220	253	6/30/2025
Gardena Management Employees Organization	19	19	21	19	6/30/2025
Gardena Police Officers Association	89	84	86	79	7/31/2024
Gardena Police Executive Association	6	6	6	7	N/A
	353	333	333	358	

Source: City of Gardena

City of Gardena
Operating Indicators by Function
Last Ten Fiscal Years

	Fiscal Year									
Function	**2022-23**	**2021-22**	**2020-21**	**2019-20**	**2018-19**	**2017-18**	**2016-17**	**2015-16**	**2014-15**	**2013-14**
Police:										
Arrests	1,921	1,674	1,547	1,761	2,183	2,901	2,642	2,423	4,499	3,251
Number of parking citations issued	17,942	20,293	30,000	27,568	29,868	29,254	23,145	22,665	11,203	24,622
Public works:										
Street resurfacing (miles)	4.17	3.58	2.25	5.68	19.06	0.49	4.52	2.95	7.00	3.38
Traffic lights and signals	91	91	91	91	91	91	91	90	89	88
Parks and recreation:										
Number of recreation classes	216	272	0	432	1,374	1,226	1,410	1,466	1,150	1,080
Number of facility rentals	2,717	584	0	53	1,977	1,112	1,222	1,221	1,164	1,072
Transit:										
Number of customers served [(1)]	1,910,285	1,606,377	1,203,880	2,406,910	2,943,363	3,110,354	3,094,180	3,610,718	3,687,038	3,689,142

NOTE:
[(1)] Fiscal Year 2017-18 data includes Fixed Route and Demand Response customers. Prior Year data includes Fixed Route only.

Source: City of Gardena, Administrative Services Department

City of Gardena
Capital Asset Statistics
by Function
Last Ten Fiscal Years

	Fiscal Year									
Function	**2022-23**	**2021-22**	**2020-21**	**2019-20**	**2018-19**	**2017-18**	**2016-17**	**2015-16**	**2014-15**	**2013-14**
Police:										
Stations	1	1	1	1	1	1	1	1	1	1
Public works:										
Streets (miles)										
-Two lanes street	83.0	83.0	83.0	83.0	83.0	83.0	83.0	83.0	83.0	83.0
-Four lanes street	25.0	25.0	25.0	25.0	25.0	25.0	25.0	25.0	50.0	50.0
-Alley	5.0	5.0	5.0	5.0	5.0	5.0	5.0	5.0	5.0	5.0
-Sidewalks	113.5	113.5	113.5	113.5	113.5	113.5	113.5	113.5	113.5	113.5
Street lights										
-Edison maintenance [(1)]	3,250	3,250	3,337	3,337	3,392	3,327	3,321	3,350	3,319	3,181
-City maintenance	194	194	193	193	194	191	198	385	197	192
Traffic signals	69	69	69	69	69	69	69	70	69	68
Traffic signals (shared)	22	22	22	22	22	22	22	23	20	20
Parks and recreation:										
Number of parks	6	6	6	6	6	6	6	6	6	6
Number of parkette	1	1	1	1	1	1	1	1	1	1
Number of municipal pool	1	1	1	1	1	1	1	1	1	1
Number of gymnasiums	2	2	2	2	2	2	2	2	2	2
Community center	1	1	1	1	1	1	1	1	1	1
Transit:										
Stations	1	1	1	1	1	1	1	1	1	1
Bus stops	492	492	492	492	492	492	595	595	595	595

NOTES:
[(1)] Streetlights maintained by Southern California Edison Company.

Source: City of Gardena, Administrative Services Department - Finance Division

City of Gardena

Annual Comprehensive Financial Report
For the Year Ended June 30, 2023

(***This page is intentionally left blank)***

THE PUN GROUP
ACCOUNTANTS & ADVISORS

200 E. Sandpointe Avenue, Suite 600
Santa Ana, California 92707

www.pungroup.cpa

REPORT ON INTERNAL CONTROL OVER FINANCIAL REPORTING AND ON COMPLIANCE AND OTHER MATTERS BASED ON AN AUDIT OF FINANCIAL STATEMENTS PERFORMED IN ACCORDANCE WITH *GOVERNMENT AUDITING STANDARDS*

Independent Auditors' Report

To the Honorable Mayor and the Members of the City Council
of the City of Gardena
Gardena, California

We have audited, in accordance with the auditing standards generally accepted in the United States of America and the standards applicable to financial audits contained in *Government Auditing Standards* issued by the Comptroller General of the United States, the financial statements of the governmental activities, the business-type activities, each major fund, and the aggregate remaining fund information of the City of Gardena, California ("City"), as of and for the year ended June 30, 2023, and the related notes to the basic financial statements, which collectively comprise the City's basic financial statements, and have issued our report thereon dated December 7, 2023.

Report on Internal Control Over Financial Reporting

In planning and performing our audit of the financial statements, we considered the City's internal control over financial reporting ("internal control") as a basis for designing audit procedures that are appropriate in the circumstances for the purpose of expressing our opinions on the financial statements, but not for the purpose of expressing an opinion on the effectiveness of the City's internal control. Accordingly, we do not express an opinion on the effectiveness of the City's internal control.

A *deficiency in internal control* exists when the design or operation of a control does not allow management or employees, in the normal course of performing their assigned functions, to prevent, or detect and correct, misstatements, on a timely basis. A *material weakness* is a deficiency, or a combination of deficiencies, in internal control, such that there is a reasonable possibility that a material misstatement of the City's financial statements will not be prevented, or detected and corrected, on a timely basis. A *significant deficiency* is a deficiency, or a combination of deficiencies, in internal control that is less severe than a material weakness, yet important enough to merit attention by those charged with governance.

Our consideration of internal control was for the limited purpose described in the first paragraph of this section and was not designed to identify all deficiencies in internal control that might be material weaknesses or significant deficiencies. Given these limitations, during our audit we did not identify any deficiencies in internal control that we consider to be material weaknesses. However, material weaknesses may exist that were not identified.

Report on Compliance and Other Matters

As part of obtaining reasonable assurance about whether the City's financial statements are free from material misstatement, we performed tests of its compliance with certain provisions of laws, regulations, contracts, and grant agreements, noncompliance with which could have a direct and material effect on the determination of financial statement. However, providing an opinion on compliance with those provisions was not an objective of our audit, and accordingly, we do not express such an opinion. The results of our tests disclosed no instances of noncompliance or other matters that are required to be reported under *Government Auditing Standards*.

Purpose of this Report

The purpose of this report is solely to describe the scope of our testing of internal control and compliance and the results of that testing, and not to provide an opinion on the effectiveness of the City's internal control or on compliance. This report is an integral part of an audit performed in accordance with *Government Auditing Standards* in considering the City's internal control and compliance. Accordingly, this communication is not suitable for any other purpose.

The Pun Group, LLP

Santa Ana, California
December 7, 2023

City of Gardena
Family Child Care Program

Gardena, California

Independent Auditors' Reports and Financial Statements

For the Year Ended June 30, 2023

THE PUN GROUP
ACCOUNTANTS & ADVISORS

City of Gardena Family Child Care Program
For the Year Ended June 30, 2023

Table of Contents

Page

General Information i

Independent Auditors' Report on the Financial Statements 1

Financial Statements:

Balance Sheet 7

Statement of Revenues, Expenditures, and Change in Fund Balance 8

Notes to the Financial Statements. 11

Supplementary Information:

Reserve Fund Calculation – Center Based Program 17

Schedule of Expenditures by State Categories 18

Schedule of Claimed Administrative Costs 19

Schedule of Claimed Equipment Expenditures 20

Schedule of Claimed Expenditures for Renovations and Repairs 21

Audited Enrollment, Attendance and Fiscal Report for Child Care and Development Programs 23

Child Care and Development Programs Certified Children Days of Enrollment and Attendance 27

Audited Reserve Account Activity Report 29

Notes to the Child Care and Development Programs Supplemental Information 31

Other Required Information:

Independent Auditors' Report on Internal Control Over Financial Reporting and on Compliance (Including Those Contained in the *CDSS Audit Guide*) and Other Matters Based on an Audit of the Program's Financial Statements Performed in Accordance with *Government Auditing Standards* 33

Independent Auditors' Report on Compliance for the Family Child Care Program Required by California Department of Social Services Audit Guide and Report on Internal Control Over Compliance 35

Schedule of Findings and Questioned Costs 38

This page intentionally left blank.

City of Gardena Family Child Care Program
For the Year Ended June 30, 2023

General Information

Name of Agency

City of Gardena
Recreation and Human Services Department
1651 West 162nd Street
Gardena, California 90247

Program Numbers

19-2180-00-2 (CCTR-2085)

Director of Recreation and Human Services Department

Stephany Santin

City Manager

Clint Osorio

Period Covered

The Fiscal Year Ended June 30, 2023

Days of Operation

255

Hours of Operation

Family day care homes' hours are slightly flexible, generally opening at 6:00 am and closing at 6:00 pm.

This page intentionally left blank.

THE PUN GROUP
ACCOUNTANTS & ADVISORS

200 E. Sandpointe Avenue, Suite 600
Santa Ana, California 92707

www.pungroup.cpa

INDEPENDENT AUDITORS' REPORT

To the Honorable Mayor and the Members of the City Council
of the City of Gardena
Gardena, California

Report on the Audit of the Financial Statements

Opinion

We have audited the accompanying financial statements of the City of Gardena, California (the "City") Family Child Care Program (the "Program"), which comprise the balance sheet as of June 30, 2023 and the related statement of revenues, expenditures, and change in fund balance for the year then ended, and the related notes to the financial statements, as listed in the table of contents.

In our opinion, the financial statements referred to above present fairly, in all material respects, the financial position of the Program as of June 30, 2023, and the respective changes in financial position thereof for the year then ended in accordance with accounting principles generally accepted in the United States of America.

Basis for Opinion

We conducted our audit in accordance with auditing standards generally accepted in the United States of America ("GAAS") and the standard applicable to financial audits contained in *Governmental Auditing Standards*, issued by the Comptroller General of the United States. Our responsibilities under those standards are further described in the Auditors' Responsibilities for the Audit of the Financial Statements section of our report. We are required to be independent of the City and the Program and to meet our other ethical responsibilities, in accordance with the relevant ethical requirements relating to our audit. We believe that the audit evidence we have obtained is sufficient and appropriate to provide a basis for our audit opinion.

Emphasis of Matter

As discussed in Note 1, the financial statements present only the Program and do not purport to, and do not, present fairly the financial position of the City of Gardena, California, as of June 30, 2023, the changes in its financial position, or where applicable, its cash flows for the year then ended in accordance with accounting principles generally accepted in the United States of America. Our opinion is not modified with respect to this matter.

Responsibilities of Management for the Financial Statements

Management is responsible for the preparation and fair presentation of these financial statements in accordance with accounting principles generally accepted in the United States of America, and for the design, implementation, and maintenance of internal control relevant to the preparation and fair presentation of financial statements that are free from material misstatement, whether due to fraud or error.

In preparing the financial statements, management is required to evaluate whether there are conditions or events, considered in the aggregate, that raise substantial doubt about Program's ability to continue as a going concern for twelve months beyond the financial statement date, including any currently known information that may raise substantial doubt shortly thereafter.

Auditors' Responsibilities for the Audit of the Financial Statements

Our objectives are to obtain reasonable assurance about whether the financial statements as a whole are free from material misstatement, whether due to fraud or error, and to issue an auditors' report that includes our opinion. Reasonable assurance is a high level of assurance but is not absolute assurance and therefore is not a guarantee that an audit conducted in accordance with GAAS and *Government Auditing Standards* will always detect a material misstatement when it exists. The risk of not detecting a material misstatement resulting from fraud is higher than for one resulting from error, as fraud may involve collusion, forgery, intentional omissions, misrepresentations, or the override of internal control. Misstatements are considered material if there is a substantial likelihood that, individually or in the aggregate, they would influence the judgment made by a reasonable user based on the financial statements.

In performing an audit in accordance with GAAS and G*overnment Auditing Standards*, we:

- Exercise professional judgment and maintain professional skepticism throughout the audit.
- Identify and assess the risks of material misstatement of the financial statements, whether due to fraud or error, and design and perform audit procedures responsive to those risks. Such procedures include examining, on a test basis, evidence regarding the amounts and disclosures in the financial statements.
- Obtain an understanding of internal control relevant to the audit in order to design audit procedures that are appropriate in the circumstances, but not for the purpose of expressing an opinion on the effectiveness of the City's internal control. Accordingly, no such opinion is expressed.
- Evaluate the appropriateness of accounting policies used and the reasonableness of significant accounting estimates made by management, as well as evaluate the overall presentation of the financial statements.
- Conclude whether, in our judgment, there are conditions or events, considered in the aggregate, that raise substantial doubt about the City's Program's ability to continue as a going concern for a reasonable period of time.

We are required to communicate with those charged with governance regarding, among other matters, the planned scope and timing of the audit, significant audit findings, and certain internal control-related matters that we identified during the audit.

Required Supplementary Information

Management has omitted Management's Discussion and Analysis that accounting principles generally accepted in the United States of America require to be presented to supplement the basic financial statements. Such missing information, although not a part of the basic financial statements, is required by the Governmental Accounting Standards Board, who considers it to be an essential part of financial reporting for placing the basic financial statements in an appropriate operational, economic, or historical context. Our opinion on the basic financial statements is not affected by this missing information.

Supplementary Information

Our audit was conducted for the purpose forming an opinion on the financial statements of the Program. The Supplementary Information are presented for purposes of additional analysis and are not a required part of the financial statements of the Program. The Supplementary Information consists of the Reserve Fund Calculation – Center Based Program, the Schedule of Expenditures by State Categories, the Schedule of Claimed Administrative Costs, the Schedule of Claimed Equipment Expenditures, the Schedule of Claimed Expenditures for Renovations and Repairs, the Audited Enrollment, Attendance and Fiscal Report for Child Care and Development Programs, Child Care and Development Programs Certified Children Days of Enrollment and Attendance, and the Audited Reserve Account Activity Report, are the responsibility of management and was derived from and relates directly to the underlying accounting and other records used to prepare the Program's financial statements.

The information has been subjected to the auditing procedures applied in the audit of the Program's financial statements and certain additional procedures, including comparing and reconciling such information directly to the underlying accounting and other records used to prepare the financial statements or to the financial statements themselves, and other additional procedures in accordance with auditing standards generally accepted in the United States of America. In our opinion, the Reserve Fund Calculation – Center Based Program, the Schedule of Expenditures by State Categories, the Schedule of Claimed Administrative Costs, the Schedule of Claimed Equipment Expenditures, the Schedule of Claimed Expenditures for Renovations and Repairs, the Audited Enrollment, Attendance and Fiscal Report for Child Care and Development Programs, Child Care and Development Programs Certified Children Days of Enrollment and Attendance, and the Audited Reserve Account Activity Report are fairly stated, in all material respects, in relation to the Program's financial statements as a whole.

Other Information

Management is responsible for the other information included in the Program's financial statements. The other information comprises the introductory and general information but does not include the Program's financial statements and our auditors' report thereon. Our opinion on the Program's financial statements do not cover the other information and we do not express an opinion or any form of assurance thereon.

In connection with our audit of the Program's financial statements, our responsibility is to read the other information and consider whether a material inconsistency exists between the other information and the Program's financial statements, or the other information otherwise appears to be materially misstated. If, based on the work performed, we conclude that an uncorrected material misstatement of the other information exists, we are required to describe it in our report.

Other Reporting Required by *Government Auditing Standards*

In accordance with *Government Auditing Standards*, we have also issued our report dated November 1, 2023, on our consideration of the City's internal control over the Program's financial reporting and on our tests of its compliance with certain provisions of laws, regulations, contracts, and grant agreements and other matters. The purpose of that report is solely to describe the scope of our testing of internal control over financial reporting and compliance and the results of that testing, and not to provide an opinion on the effectiveness of the City's internal control over Program's financial reporting or on compliance. That report is an integral part of an audit performed in accordance with *Government Auditing Standards* in considering the City's internal control over the Program's financial reporting and compliance.

The Pun Group, LLP

Santa Ana, California
November 1, 2023

This page intentionally left blank.

FINANCIAL STATEMENTS

This page intentionally left blank.

City of Gardena Family Child Care Program
Balance Sheet
June 30, 2023

ASSETS:		
Cash and investments	$	144,874
Cash and investments - reserve fund		502,087
Due from other governments		78,295
Prepaid items		1,624
Total assets	$	726,880
LIABILITIES, DEFERRED INFLOWS OF RESOURCES, AND FUND BALANCE		
LIABILITIES:		
Accounts payable	$	202,018
Accrued liabilities		3,046
Salaries and benefits payable		10,144
Total liabilities		215,208
DEFERRED INFLOWS OF RESOURCES:		
Unavailable revenue		78,295
Total deferred inflows of resources		78,295
FUND BALANCE:		
Restricted		433,377
Total fund balance		433,377
Total liabilities, deferred inflows of resources, and fund balance	$	726,880

See accompanying Notes to the Financial Statements.

City of Gardena Family Child Care Program
Statement of Revenues, Expenditures, and Change in Fund Balance
For the Year Ended June 30, 2023

REVENUES:		
Intergovernmental	$	3,041,050
Interest income		18,071
Miscellaneous		350
Total revenues		3,059,471
EXPENDITURES:		
Current:		
Salaries		510,237
Employee benefits		212,393
Books and supplies		40,126
Services, building and occupancy		64,799
Payments to providers		2,190,639
Other operating expenditures		83,337
Debt service:		
Principal retirement		5,808
Interest and fiscal charges		5
Total expenditures		3,107,344
NET CHANGE IN FUND BALANCE		(47,873)
FUND BALANCE:		
Beginning of Year		481,250
End of Year	$	433,377

See accompanying Notes to the Financial Statements.

NOTES TO THE FINANCIAL STATEMENTS

This page intentionally left blank.

Note 1 – Summary of Significant Accounting Policies

A. Reporting Entity

The accompanying financial statements of the City of Gardena, California (the "City") Family Child Care Program (the "Program") includes the financial activities of the City's child care program. The financial operations of the Program are accounted for in the Family Child Care Special Revenue Fund (the "Fund") of the City. The City's child care program provides funding to child care facilities for children that are ages infant to thirteen years.

B. Measurement Focus Basis of Accounting

The financial statements are prepared in accordance with accounting principles generally accepted in the United States of America ("U.S. GAAP") and to meet the requirements of the California Department of Social Services ("CDSS").

The Program's financial activities are reported using "current financial resources" measurement focus and the modified accrual basis of accounting where revenues are recognized in the accounting period in which they become measurable and available to pay liabilities of the current period. Revenues considered susceptible to accrual include charges for services, federal and state grants and interest. For these purposes, the Program considers revenues to be available if they are collected within 60 days of the end of the current fiscal year. Expenditures are recognized in the accounting period in which the liability is incurred.

The accompanying financial statements are not intended to and does not present the financial position or results of operations of the City.

C. Cash and Investments

The Program's cash is pooled with the City's internal investment pool, which is considered to be cash on hand, demand deposits, and short-term investments with original maturity of three months or less from the date of acquisition.

D. Prepaid items

Certain payments to vendors reflect costs applicable to future accounting periods and are reported as prepaid items in the financial statements.

E. Deferred Inflows of Resources

In addition to liabilities, the balance sheet will sometimes report a separate section for deferred inflows of resources. This separate financial statement element, deferred inflows of resources, represents an acquisition of fund balance that applies to a future period(s) and so will not be recognized as an inflow of resources (revenue) until that time. The Program has one item reported in this category. The item arises only under a modified accrual basis of accounting for unavailable revenue. The governmental funds report unavailable revenues from one source: grant revenues. This amount is deferred and recognized as an inflow of resources in the period that the amounts become available.

Note 1 – Summary of Significant Accounting Policies (Continued)

F. Fund Balance

The Program only has restricted fund balance as defined below:

Restricted – Restricted fund balances encompass the portion of net fund resources subject to externally enforceable legal restrictions. This includes externally imposed restrictions by creditors, grantors, laws or regulations of other governments, as well as restrictions imposed by law through constitutional provisions or enabling legislation.

G. Use of Estimates

The preparation of the financial statements is prepared in accordance with U.S. GAAP and it requires management to make estimates and assumptions that affect certain reported amounts and disclosures. Accordingly, actual results could differ from those estimates.

Note 2 – Cash and Investments

The Program's share of the City's cash and investments at June 30, 2023 was $646,961.

Cash is deposited in the City's internal investment pool, which is reported at the amortized cost. The Program does not own specifically identifiable securities in the City's pool. Interest income is allocated based on average cash balances. Investment policies and associated risk factors applicable to the Program are those of the City and are included in the City's basic financial statements.

Note 3 – Reserve account

Child care and development contractors are allowed, with the CDSS approval, to maintain a reserve account from earned but unexpended child development contract funds. Only direct service child care and development programs that are funded under contract with the CDSS can expend the funds. In accordance with the stipulations of the Social Services Code, the Program maintains its reserve account in an interest-bearing account, and all interest earned is recorded in the appropriate reserve account. The reserve account balance at June 30, 2023 was $502,177. Upon termination of all child care contracts between the City and CDSS, the reserve account balance must be returned to CDSS.

The reserve account is restricted for child care and development programs but may be applied to any contracts that are eligible to contribute to that particular program type.

Note 4 – Parent Fees

Parent fees represent the portion of child care expenses that are paid by parents who do not qualify for the full subsidy. The parents pay the Program directly for their portion of the child care expenses. Due to the COVID-19 pandemic, the CDSS waived all parent fees for the year ended June 30, 2023.

Note 5 – Child Care and Development Contracts

The Program contracts with the CDSS to conduct a child care and development programs. Program reimbursement is the lesser of allowable costs incurred and a maximum funding amount. For the year ended June 30, 2023, the Program recognized $3,041,050 (excluding the $18,421 of $18,071 interest income and $350 of miscellaneous income) of the maximum contract amount of $3,696,440 from contract number CCTR-2085. The program reported total program revenues in the amount of $3,059,470 from contract numbers CCTR-2085 for the year ended June 30, 2023.

The Program had the following grant expenditures and corresponding grant receipts for the year ended June 30, 2023 for contract numbers CCTR-2085.

	Contract Number	Grant Award Amount	Grant Revenues Recognized	Miscellaneous and Interest Income	Grant Expenditures
Federal Grants:					
Child Development	CCTR-2085	$ 1,564,920	$ 1,495,932	$ 18,421	$ 1,514,353
Total federal grants		1,564,920	1,495,932	18,421	1,514,353
State Grants:					
Child Development	CCTR-2085	$ 2,131,520	$ 1,545,118	$ -	$ 1,592,991
Total state grants		2,131,520	1,545,118	-	1,592,991
Total		$ 3,696,440	$ 3,041,050	$ 18,421	$ 3,107,344

Note 6 – Pension Plan

The Program, as part of the City, contributes to the California Public Employees Retirement System ("CalPERS"), an agent multiple-employer defined benefit pension plan. CalPERS acts as a common investment and administrative agent for participating public entities within the State of California. The Program is charged by the City for its share of pension contributions based upon rates established by CalPERS for the City's general employees. For the year ended June 30, 2023, the Program reported $109,574 in pension contribution, including unfunded accrued liability contribution allocated to the Program.

For more detailed information about the City's CALPERS pension plan, refer to the City's 2023 Annual Comprehensive Financial Report.

Note 7 – Indirect Cost Allocation

Certain general and administrative costs are allocated to the Program by the City. The City's indirect cost rate of 10% was determined through a cost allocation plan and met the CDSS maximum allowed rate.

For the year ended June 30, 2023, the indirect cost allocated to the Program amounted to $83,337.

Note 8 – Self-Insurance Program

The Program is part of the City's self-insurance program for state unemployment insurance and employee long-term disability. The City is self-insured for the first $750,000 on each workers' compensation claims, and $750,000 on each general liability claim against the City. During the year ended June 30, 2023, the Program was not charged by the City's Self-Insurance Liability Fund for liability claims.

Note 9 – Commitments and Contingencies

The Program receives state and federal funds for child development services that are subject to review and audit by the grantors. Although such audits could result in disallowed expenditures under terms of the grants, it is believed that any repayments resulting from disallowances will not be material.

Note 10 – Reconciliation from Restricted Fund Balance to Reserve Ending Balance

The following is the reconciliation of restricted fund balance from the financial statements to CDSS Form 9530-A for the year ended June 30, 2023:

Restricted Fund Balance	$	433,377
Plus: Carryover reserve from prior year earned contract amount		68,710
Reserve Ending Balance	$	502,087

Note 11 – Subsequent Events

As of May 30, 2023, per *Section-General Provisions, Sub Section-L. Contractor's Termination for Convenience (5 CCR 18024*) of the CDSS Funding Terms and Conditions, the City provided the CDSS it's 90 days' notice of intent to terminate the Agreement. The contract between CDSS and the Program was terminated effective August 31, 2023, with the Program's last day being August 31, 2023.

SUPPLEMENTARY INFORMATION

This page intentionally left blank.

City of Gardena Family Child Care Program
Vendor Number: 2180
Reserve Fund Calculation - Center Based Program
For the Year Ended June 30, 2023

	Reserve Amount
Project No. 19-2180-00-2 (Center Based)	
Contract No. CCTR-2085	

The allowable amount to transfer to (from) the Center Based Reserve Fund is the lesser of the following three calculations:

1. $ 3,696,440 (MRA) + $ 350 (Miscellaneous) + $ 8,833 (Interest) - $ 3,107,344 (Net cost) = $ 598,279 (Possible Reserve Amount)

2. ($ 3,413,684 (Service Earnings) - $ 350 (Miscellaneous) - $ 8,833 (Interest)) - ($ 3,107,344 (Net costs) - $ 350 (Miscellaneous) - $ 8,833 (Interest)) = $ 306,340 (Possible Reserve Amount)

3. $ 3,696,440 (MRA) x 15% (State Allowed %)) - $ 492,849 (Beginning Reserve) = $ 61,617 (Possible Reserve Amount)

Transfer to reserve for the year ended June 30, 2023	$ 61,617

City of Gardena Family Child Care Program
Schedule of Expenditures by State Categories
For the Year Ended June 30, 2023

Expenditures	Center Based Program General Program CCTR-2085
Direct payments to providers	$ 2,190,639
1000 Certificated salaries	91,338
2000 Classified salaries	418,899
3000 Employee benefits	212,393
4000 Books and supplies	40,126
5000 Services and other operating expenses	70,612
6100/6200 Other approved capital outlays	-
6400 New equipment	-
6500 Replacement equipment	-
Depreciation or use allowance	-
Indirect costs	83,337
Total expenditures claimed for reimbursement	3,107,344
Total supplemental expenses	-
Total Expenditures	$ 3,107,344

City of Gardena Family Child Care Program
Schedule of Claimed Administrative Costs
For the Year Ended June 30, 2023

		Center Based Program
		General Program CCTR-2085
2000	Classified salaries	$ 146,257
	Total salaries	146,257
3000	Employee benefits	56,957
	Total employee benefits	56,957
	Postage	763
	Office supplies	3,222
4000	**Total books and supplies**	3,985
	Contract services	18,779
	Equipment maintenance	10,036
	Professional services	10,032
	Wireless Communications	1,393
	Dues and subscriptions	768
	Conferences and meetings	5,053
	Rental charges	3,622
	Software maintenance	3,297
	Indirect costs	83,337
5000	**Total contracted services and other operating expenditures**	136,317
	Total administrative expenditures	$ 343,516

City of Gardena Family Child Care Program
Schedule of Claimed Equipment Expenditures
For the Year Ended June 30, 2023

Capitalized Equipment Expensed on the AUD with Prior Written Approval	Start-Up CCTR2085	Subcontract	Non-CD Programs	Total
Nonoe	$ -	$ -	$ -	$ -
Subtotal	-	-	-	-
Capitalized Equipment Expensed on the AUD without Prior Written Approval				
Nonoe	-	-	-	-
Subtotal	-	-	-	-
Total	$ -	$ -	$ -	$ -

City of Gardena Family Child Care Program
Schedule of Claimed Expenditures for Renovations and Repairs
For the Year Ended June 30, 2023

Expenditures Under $10,000 Unit Cost		Expenditures Over $10,000 Unit Cost With CDSS Approval		Expenditures Over $10,000 Unit Cost Without CDSS Approval	
Cost	Item	Cost	Item	Cost	Item
$ -	No renovation and repair expenditures using contract funds	$ -	No renovation and repair expenditures using contract funds	$ -	No renovation and repair expenditures using contract funds

This page intentionally left blank.

AUDITED ENROLLMENT, ATTENDANCE AND FISCAL REPORT FOR CHILD CARE AND DEVELOPMENT PROGRAMS

Fiscal Year Ending June 30, 2023
Contract Number CCTR-2085
Vendor Code 2180

Full Name of Contractor City of Gardena

Section 1 - Number of Counties Where Services are Provided

Number of counties where the agency provided services to certified children (Form AUD 9500.1): 1

Number of counties where the agency provided mental health consultation services to certified children (Form AUD 9500.2):

Number of counties where the agency provided services to non-certified children (Form AUD 9500.3):

Number of counties where the agency provided mental health consultation services to non-certified children (Form AUD 9500.4):

Total enrollment and attendance forms to attach: 1

Note: For each of the above categories, submit one form for each service county for the fiscal year.

Section 2 - Days of Enrollment, Attendance and Operation

	Column A Cumulative FY CDNFS 9500	Column B Audit Adjustments	Column C Cumulative per Audit	Column D Adjusted Days per Audit
Total Certified Days of Enrollment	40,179	2	40,181	54,479.4765
Total Certified Days of Enrollment with Mental Health Consultation Services	0			
Days of Attendance (including MHCS)	38,719	191	38,910	**N/A**
Total Non-Certified Days of Enrollment	0			
Total Non-Certified Days of Enrollment with Mental Health Consultation Services	0			
Days of Operation	255		255	**N/A**

Full Name of Contractor City of Gardena **Contract Number** CCTR-2085

Section 3 - Revenue

	Column A Cumulative FY CDNFS 9500	Column B Audit Adjustments	Column C Cumulative per Audit
Restricted Income - Child Nutrition Programs			
Restricted Income - County Maintenance of Effort (WIC Section 10308.5)			
Restricted Income - American Rescue Plan Act (ARPA)			
Restricted Income - Other: Field Trips		350	350
Restricted Income - Subtotal		**350**	**350**
Transfer From Reserve			
Waived Family Fees for Certified Children	160,220		160,220
Interest Earned on Child Development Apportionment Payments	5,164	3,669	8,833
Unrestricted Income - Fees for Non-Certified Children			
Unrestricted Income - Head Start			
Unrestricted Income - Other:			
Total Revenue	**165,384**	**4,019**	**169,403**

Comments:

Audit Report Page 24

Full Name of Contractor City of Gardena **Contract Number** CCTR-2085

Section 4 - Reimbursable Expenses

	Column A Cumulative FY CDNFS 9500	Column B Audit Adjustments	Column C Cumulative per Audit
Direct Payments to Providers (FCCH only)	2,195,040	-4,401	2,190,639
1000 Certificated Salaries	91,338		91,338
2000 Classified Salaries	418,899		418,899
3000 Employee Benefits	152,778	59,615	212,393
4000 Books and Supplies	29,182	10,944	40,126
5000 Services and Other Operating Expenses	70,624	-12	70,612
6100/6200 Other Approved Capital Outlay			
6400 New Equipment (program-related)			
6500 Equipment Replacement (program-related)			
Depreciation or Use Allowance			
Start-up Expenses (service level exemption)			
Budget Impasse Credit			
Indirect Costs (include in Total Administrative Cost)	76,282	7,055	83,337
Non-Reimbursable (State use only)			
Total Reimbursable Expenses	**3,034,143**	**73,201**	**3,107,344**
Total Administrative Cost (included in Section 4 above)	317,194	26,322	343,516
Total Staff Training Cost (included in Section 4 above)			

Approved Indirect Cost Rate: 10 %

☑ NO SUPPLEMENTAL REVENUE / EXPENSES Check this box and omit page 4.

Audit Report Page 25

Full Name of Contractor City of Gardena **Contract Number** CCTR-2085

Section 7 - Summary

	Column A Cumulative FY CDNFS 9500	Column B Audit Adjustments	Column C Cumulative per Audit
Total Certified Days of Enrollment (including MHCS)	40,179	2	40,181
Days of Operation	255		255
Days of Attendance (including MHCS)	38,719	191	38,910
Restricted Program Income		350	350
Transfer from Reserve			
Waived Family Fees for Certified Children	160,220		160,220
Interest Earned on Child Development Apportionment Payments	5,164	3,669	8,833
Direct Payments to Providers	2,195,040	-4,401	2,190,639
Start-up Expenses (service level exemption)			
Total Reimbursable Expenses	3,034,143	73,201	3,107,344
Total Administrative Cost	317,194	26,322	343,516
Total Staff Training Cost			

Total Certified Adjusted Days of Enrollment (including MHCS) 54,479.4765

Total Non-Certified Adjusted Days of Enrollment (including MHCS)

Independent auditor's assurances on agency's compliance with contract funding terms and conditions and program requirements for programs that transferred to the California Department of Social Services on July 1, 2021 pursuant to WIC Section 10203(b):

Eligibility, enrollment and attendance records are being maintained as required (select YES or NO from the drop-down box): Yes

Reimbursable expenses claimed on page 3 are eligible for reimbursement, reasonable, necessary, and adequately supported (select YES or NO from the drop-down box): Yes

Include any comments in the comments box on page 2. If necessary, attach additional sheets to explain adjustments.

Audit Report Page 26

CHILD CARE AND DEVELOPMENT PROGRAMS CERTIFIED CHILDREN DAYS OF ENROLLMENT AND ATTENDANCE

Fiscal Year Ending June 30, 2023
Contract Number CCTR-2085
Vendor Code 2180

Full Name of Contractor City of Gardena

Service County: Los Angeles

	Column A Cumulative FY CDNFS 9500	Column B Audit Adjustments	Column C Cumulative per Audit	Column D Adjustment Factor	Column E Adjusted Days per Audit
Infants (up to 18 months) Full-time-plus	695		695	2.8792	2,001.0440
Infants (up to 18 months) Full-time	3,399		3,399	2.4400	8,293.5600
Infants (up to 18 months) One-half-time	681		681	1.5455	1,052.4855
Toddlers (18 up to 36 months) Full-time-plus	781		781	2.1240	1,658.8440
Toddlers (18 up to 36 months) Full-time	9,373		9,373	1.8000	16,871.4000
Toddlers (18 up to 36 months) One-half-time	2,445		2,445	1.1401	2,787.5445
Three Years and Older Full-time-plus	722		722	1.1800	851.9600
Three Years and Older Full-time	14,262		14,262	1.0000	14,262.0000
Three Years and Older One-half-time	4,505	2	4,507	0.6334	2,854.7338
Exceptional Needs Full-time-plus	0			1.8172	
Exceptional Needs Full-time	357		357	1.5400	549.7800
Exceptional Needs One-half-time	178		178	0.9754	173.6212

Full Name of Contractor City of Gardena **Contract Number** CCTR-2085

	Column A Cumulative FY CDNFS 9500	Column B Audit Adjustments	Column C Cumulative per Audit	Column D Adjustment Factor	Column E Adjusted Days per Audit
Dual Language Learner Full-time-plus	872		872	1.2980	1,131.8560
Dual Language Learner Full-time	1,675		1,675	1.1000	1,842.5000
Dual Language Learner One-half-time	234		234	0.6334	148.2156
At Risk of Abuse or Neglect Full-time-plus	0			1.2980	
At Risk of Abuse or Neglect Full-time	0			1.1000	
At Risk of Abuse or Neglect One-half-time	0			0.6334	
Severely Disabled Full-time-plus	0			2.2774	
Severely Disabled Full-time	0			1.9300	
Severely Disabled One-half-time	0			1.2225	
Total Certified Days of Enrollment	**40,179**	**2**	**40,181**	**N/A**	**54,479.5446**
Days of Attendance	**38,910**		**38,910**	**N/A**	**N/A**

Enter the sum of Total Certified Days of Enrollment from Form AUD9500.1(s) in the Total Certified Days of Enrollment line of AUD 9500, Section 2.

Enter the sum of Days of Attendance from all Form AUD9500.2(s) and Form AUD9500.2(s) in the Days of Attendance line of AUD 9500, Section 2.

AUDITED RESERVE ACCOUNT ACTIVITY REPORT

Fiscal Year End	June 30, 2023
Reserve Account Type	Center-Based
Vendor Code	2180

Full Name of Contractor **City of Gardena**

Section 1 - Prior Year Reserve Account Activity

1. Beginning Balance (2021–22 AUD 9530A Ending Balance)	140,989
2. Plus Transfers to Reserve Account:	Per 2021–22 Post-Audit CDNFS 9530
Contract No.CCTR-2085	351,860
Contract No.	
Contract No.	
Contract No.	
Contract No.	
Contract No.	
Total Transferred from 2021–22 Contracts to Reserve	**351,860**
3. Less Excess Reserve to be Billed	
4. Ending Balance per 2021-22 Post-Audit CDNFS 9530	**492,849**

Section 2 - Current Year (2022–23) Reserve Account Activity

	Column A CDNFS 9530A	Column B Audit Adjustments	Column C per Audit
5. Plus Interest Earned This Year on Reserve:	9,238		9,238
6. Less Transfers to Contracts from Reserve:			
Contract No.			
Contract No.			
Contract No.			
Contract No.			
Contract No.			
Contract No.			
Total Transferred to Contracts from Reserve Account			
7. Ending Balance on June 30, 2023	**502,087**		**502,087**

COMMENTS - If necessary, attach additional sheets to explain adjustments.

Audit Report Page 29

This page intentionally left blank.

City of Gardena Family Child Care Program
Notes to the Child Care and Development Programs Supplemental Information
For the Year Ended June 30, 2023

In accordance with the applicable requirements from the Funding Terms & Conditions:

1. Interest expense is only allowable as a reimbursable cost in certain circumstances when it has been preapproved by the administering state department or relates to the lease purchase, acquisition, or repair or renovation of early learning and care facilities owned or leased by the contractor. No interest expense was claimed to a child care and development contract for the year ended June 30, 2023.

2. All expenses claimed for reimbursement under a related party rent transaction must be supported by a fair market rental estimate from an independent appraiser, licensed by the California Office of Real Estate Appraisers. Related party rent expense claimed as a reimbursable expense for the year ended June 30, 2023, was $0.

3. Bad debt expense is unallowable unless it relates to uncollected family fees where documentation of adequate collection attempts exists. No bad debt expense was claimed to a child care and development contract for the year ended June 30, 2023.

This page intentionally left blank.

THE PUN GROUP
ACCOUNTANTS & ADVISORS

200 E. Sandpointe Avenue, Suite 600
Santa Ana, California 92707

www.pungroup.cpa

REPORT ON INTERNAL CONTROL OVER FINANCIAL REPORTING AND ON COMPLIANCE (INCLUDING THOSE CONTAINED IN THE *CDSS AUDIT GUIDE*) AND OTHER MATTERS BASED ON AN AUDIT OF THE PROGRAM'S FINANCIAL STATEMENTS PERFORMED IN ACCORDANCE WITH *GOVERNMENT AUDITING STANDARDS*

Independent Auditors' Report

To the Honorable Mayor and the Members of the City Council
of the City of Gardena
Gardena, California

We have audited, in accordance with auditing standards generally accepted in the United States of America, the standards applicable to financial audits contained in *Government Auditing Standards*, issued by the Comptroller General of the United States, and *California Department of Social Services Audit Guide* (the "*CDSS Audit Guide*"), issued by the California Department of Social Services, the financial statements of the City of Gardena, California (the "City") Family Child Care Program (the "Program"), which comprise the balance sheet as of June 30, 2023 and the related statement of revenues, expenditures, and change in fund balance for the year then ended, and the related notes to the financial statements, and have issued our report thereon dated November 1, 2023.

Report on Internal Control Over Financial Reporting

In planning and performing our audit of the Program's financial statements, we considered the City's internal control over the Program's financial reporting ("internal control") as a basis for designing audit procedures that are appropriate in the circumstances for the purpose of expressing our opinion on the financial statements, but not for the purpose of expressing an opinion on the effectiveness of the City's internal control. Accordingly, we do not express an opinion on the effectiveness of the City's internal control.

A *deficiency in internal control* exists when the design or operation of a control does not allow management or employees, in the normal course of performing their assigned functions, to prevent, or detect and correct, misstatements, on a timely basis. A *material weakness* is a deficiency, or a combination of deficiencies, in internal control, such that there is a reasonable possibility that a material misstatement of the Program's financial statements will not be prevented, or detected and corrected, on a timely basis. A *significant deficiency* is a deficiency, or a combination of deficiencies, in internal control that is less severe than a material weakness, yet important enough to merit attention by those charged with governance.

Our consideration of internal control was for the limited purpose described in the first paragraph of this section and was not designed to identify all deficiencies in internal control that might be material weaknesses or, significant deficiencies. Given these limitations, during our audit we did not identify any deficiencies in internal control that we consider to be material weaknesses. However, material weaknesses or significant deficiencies may exist that were not been identified.

Report on Compliance and Other Matters

As part of obtaining reasonable assurance about whether the Program's financial statements are free of material misstatement, we performed tests of the its compliance with certain provisions of laws, regulations, contacts and grant agreements, noncompliance with which could have a direct and material effect on the financial statements. However, providing an opinion on compliance with those provisions was not an objective of our audit, and accordingly, we do not express such an opinion. The results of our tests disclosed no instances of noncompliance or other matters that are required to be reported under *Government Auditing Standards.*

Purpose of this Report

The purpose of this report is solely to describe the scope of our testing of internal control and compliance and the results of that testing, and not to provide an opinion on the effectiveness of the City's internal control or on compliance. This report is an integral part of an audit performed in accordance with *Government Auditing Standards* and the *CDSS Audit Guide* in considering the City's internal control and compliance. Accordingly, this communication is not suitable for any other purpose.

The Pun Group, LLP

Santa Ana, California
November 1, 2023

THE PUN GROUP
ACCOUNTANTS & ADVISORS

200 E. Sandpointe Avenue, Suite 600
Santa Ana, California 92707

www.pungroup.cpa

REPORT ON COMPLIANCE FOR THE FAMILY CHILD CARE PROGRAM REQUIRED BY CALIFORNIA DEPARTMENT OF SOCIAL SERVICES AUDIT GUIDE AND REPORT ON INTERNAL CONTROL OVER COMPLIANCE

Independent Auditors' Report

To the Honorable Mayor and the Members of the City Council
of the City of Gardena
Gardena, California

Report on Compliance for Family Child Care Program Required by California Department of Social Services

Opinion on Family Child Care Program

We have audited the City of Gardena, California's (the "City") compliance with the types of compliance requirements identified as subject to audit in the *California Department of Social Services Audit Guide* (the "*CDSS Audit Guide*"), issued by the California Department of Social Services, that could have a direct and material effect on the City's Family Child Care Program (the "Program") for the year ended June 30, 2023.

In our opinion, the City complied, in all material respects, with the types of compliance requirements referred to above that could have a direct and material effect on the Family Child Care Program for the year ended June 30, 2023.

Basis for Opinion on Family Child Care Program

We conducted our audit of compliance in accordance with auditing standards accepted in the United States of America; the standards applicable to financial audits contained in *Government Auditing Standards* issued by the Comptroller General of the United States, and the *CDSS Audit Guide*, issued by the California Department of Social Services. Our responsibilities under those standards and the *CDSS Audit Guide* are further described in the Auditors' Responsibilities for the Audit of Compliance section of our report.

We are required to be independent of City and to meet our other ethical responsibilities, in accordance with relevant ethical requirements relating to our audit. We believe that the audit evidence we have obtained is sufficient and appropriate to provide a basis for our opinion on compliance for the Program. Our audit does not provide a legal determination of City's compliance with the compliance requirements referred to above.

Responsibilities of Management for Compliance

Management is responsible for compliance with the requirements referred to above and for the design, implementation, and maintenance of effective internal control over compliance with the requirements of laws, statutes, regulations, rules, and provisions of contracts or grant agreements applicable to the Program.

Auditors' Responsibilities for the Audit of Compliance

Our objectives are to obtain reasonable assurance about whether material noncompliance with the compliance requirements referred to above occurred, whether due to fraud or error, and express an opinion on the City's compliance based on our audit. Reasonable assurance is a high level of assurance but is not absolute assurance and therefore is not a guarantee that an audit conducted in accordance with auditing standards generally accepted in the United States of America, *Government Auditing Standards*, and the *CDSS Audit Guide* will always detect material noncompliance when it exists. The risk of not detecting material noncompliance resulting from fraud is higher than for that resulting from error, as fraud may involve collusion, forgery, intentional omissions, misrepresentations, or the override of internal control. Noncompliance with the compliance requirements referred to above is considered material if there is a substantial likelihood that, individually or in the aggregate, it would influence the judgment made by a reasonable user of the report on compliance about City's compliance with the requirements of the Program as a whole.

In performing an audit in accordance with auditing standards generally accepted in the United States of America, *Government Auditing Standards*, and the *CDSS Audit Guide*, we:

- Exercise professional judgment and maintain professional skepticism throughout the audit.

- Identify and assess the risks of material noncompliance, whether due to fraud or error, and design and perform audit procedures responsive to those risks. Such procedures include examining, on a test basis, evidence regarding City's compliance with the compliance requirements referred to above and performing such other procedures as we considered necessary in the circumstances.

- Obtain an understanding of City's internal control over compliance relevant to the audit in order to design audit procedures that are appropriate in the circumstances and to test and report on internal control over compliance in accordance with the *CDSS Audit Guide*, but not for the purpose of expressing an opinion on the effectiveness of City's internal control over compliance. Accordingly, no such opinion is expressed.

We are required to communicate with those charged with governance regarding, among other matters, the planned scope and timing of the audit and any significant deficiencies and material weaknesses in internal control over compliance that we identified during the audit.

Report on Internal Control Over Compliance

A *deficiency in internal control over compliance* exists when the design or operation of a control over compliance does not allow management or employees, in the normal course of performing their assigned functions, to prevent, or detect and correct, noncompliance with a compliance requirement on a timely basis. A *material weakness in internal control over compliance* is a deficiency, or combination of deficiencies, in internal control over compliance, such that there is a reasonable possibility that material noncompliance with a compliance requirement will not be prevented, or detected and corrected, on a timely basis. A *significant deficiency in internal control over compliance* is a deficiency, or a combination of deficiencies, in internal control over compliance with a compliance requirement that is less severe than a material weakness in internal control over compliance, yet important enough to merit attention by those charged with governance.

Our consideration of internal control over compliance was for the limited purpose described in the Auditors' Responsibilities for the Audit of Compliance section and was not designed to identify all deficiencies in internal control over compliance that might be material weaknesses or significant deficiencies in internal control over compliance. Given these limitations, during our audit we did not identify any deficiencies in internal control over compliance that we consider to be material weaknesses, as defined above. However, material weaknesses may exist that have not been identified.

Our audit was not designed for the purpose of expressing an opinion on the effectiveness of internal control over compliance. Accordingly, no such opinion is expressed.

The purpose of this report on internal control over compliance is solely to describe the scope of our testing on internal control over compliance and the results of that testing based on the requirements of the *CDSS Audit Guide*. Accordingly, this report is not suitable for any other purpose.

The Pun Group, LLP

Santa Ana, California
November 1, 2023

City of Gardena Family Child Care Program
Schedule of Findings and Questioned Costs
For the Year Ended June 30, 2023

Audit Findings and Questioned Costs

A. Current Year Findings and Questioned Costs

No current year findings were noted.

B. Prior Year Findings and Questioned Costs

No prior year findings were noted.

The GTrans Enterprise Fund of the City of Gardena

Gardena, California

Independent Auditors' Reports and Financial Statements

For the Year Ended June 30, 2023

THE PUN GROUP
ACCOUNTANTS & ADVISORS

The GTrans Enterprise Fund of the City of Gardena
For the Year Ended June 30, 2023

Table of Contents

Page

Independent Auditors' Reports:

Report on the Financial Statements 1

Report on Internal Control Over Financial Reporting and on Compliance (Including Those Contained in the TDA Statutes and California Codes of Regulations) and Other Matters Based on an Audit of the GTrans' Financial Statements Performed in Accordance with *Government Auditing Standards* 5

Report on Compliance for the Transit Operator Required by the Transportation Development Act and Report on Internal Control Over Compliance 7

Independent Accountants' Report on Compliance for Measure R 11

Financial Statements:

Statement of Net Position 15

Statement of Revenues, Expenses, and Changes in Net Position 16

Statement of Cash Flows 17

Notes to the Financial Statements 19

Required Supplementary Information (Unaudited):

Schedule of GTrans' Proportionate Share of the Net Pension Liability 42

Schedule of Contributions – Pensions 44

Schedule of Changes in Net OPEB Liability and Related Ratios 46

Schedule of Contributions – Other Postemployment Benefits 48

Supplementary Information:

Schedule of Farebox Recovery Ratio Calculation 53

Schedules of Proceeds Received and Expended 54

This page intentionally left blank.

THE PUN GROUP
ACCOUNTANTS & ADVISORS

200 E. Sandpointe Avenue, Suite 600
Santa Ana, California 92707

www.pungroup.cpa

INDEPENDENT AUDITORS' REPORT

To the Honorable Mayor and the Members of City Council
of the City of Gardena
Gardena, California

Report on the Financial Statements

Opinion

We have audited the accompanying financial statements of the GTrans Enterprise Fund ("GTrans") of the City of Gardena, California (the "City") as of and for the year ended June 30, 2023, and the related notes to the financial statements, as listed in the table of contents.

In our opinion, the financial statements referred to above present fairly, in all material respects, the financial position of GTrans's as of June 30, 2023, and the changes in financial position, and, cash flows thereof for the year then ended in accordance with accounting principles generally accepted in the United States of America.

Basis for Opinion

We conducted our audit in accordance with auditing standards generally accepted in the United States of America ("GAAS"), and the standards applicable to financial audits contained in *Government Auditing Standards*, issued by the Comptroller General of the United States ("*Government Auditing Standards*"). Our responsibilities under those standards are further described in the Auditors' Responsibilities for the Audit of the Financial Statements section of our report. We are required to be independent of the City and to meet our other ethical responsibilities, in accordance with the relevant ethical requirements relating to our audit. We believe that the audit evidence we have obtained is sufficient and appropriate to provide a basis for our audit opinion.

Emphasis of Matters

Financial Statements Presentation

As discussed in Note 1B, the financial statements present only the GTrans and do not purport to, and do not present fairly the financial position of the City as of June 30, 2023, the changes in its financial positions, or where applicable, its cash flows for the year then ended in accordance with accounting principles generally accepted in the United States of America. Our opinion is not modified with respect to this matter.

Change in Accounting Principle

As described in Note 1Q to the financial statements, in 2023, GTrans adopted new accounting guidance, GASB Statement No. 96, *Subscription-based Information Technology Arrangements*. Our opinion is not modified with respect this matter.

Responsibility of Management for the Financial Statements

Management is responsible for the preparation and fair presentation of these financial statements in accordance with accounting principles generally accepted in the United States of America; and for the design, implementation, and maintenance of internal control relevant to the preparation and fair presentation of financial statements that are free from material misstatement, whether due to fraud or error.

In preparing the financial statements, management is required to evaluate whether there are conditions or events, considered in the aggregate, that raise substantial doubt about GTran's ability to continue as a going concern for twelve months beyond the financial statement date, including any currently known information that may raise substantial doubt shortly thereafter.

Auditors' Responsibilities for the Audit of the Financial Statements

Our objectives are to obtain reasonable assurance about whether the financial statements as a whole are free from material misstatement, whether due to fraud or error, and to issue an auditors' report that includes our opinion. Reasonable assurance is a high level of assurance but is not absolute assurance and therefore is not a guarantee that an audit conducted in accordance with GAAS and *Government Auditing Standards* will always detect a material misstatement when it exists. The risk of not detecting a material misstatement resulting from fraud is higher than for one resulting from error, as fraud may involve collusion, forgery, intentional omissions, misrepresentations, or the override of internal control. Misstatements are considered material if there is a substantial likelihood that, individually or in the aggregate, they would influence the judgment made by a reasonable user based on the financial statements.

In performing an audit in accordance with GAAS and *Government Auditing Standards*, we:

- Exercise professional judgment and maintain professional skepticism throughout the audit.

- Identify and assess the risks of material misstatement of the financial statements, whether due to fraud or error, and design and perform audit procedures responsive to those risks. Such procedures include examining, on a test basis, evidence regarding the amounts and disclosures in the financial statements.

- Obtain an understanding of internal control relevant to the audit in order to design audit procedures that are appropriate in the circumstances, but not for the purpose of expressing an opinion on the effectiveness of the City's internal control. Accordingly, no such opinion is expressed.

- Evaluate the appropriateness of accounting policies used and the reasonableness of significant accounting estimates made by management, as well as evaluate the overall presentation of the financial statements.

- Conclude whether, in our judgment, there are conditions or events, considered in the aggregate, that raise substantial doubt about the GTrans' ability to continue as a going concern for a reasonable period of time.

We are required to communicate with those charged with governance regarding, among other matters, the planned scope and timing of the audit, significant audit findings, and certain internal control-related matters that we identified during the audit.

Required Supplementary Information

Accounting principles generally accepted in the United States of America required that the Schedule of the GTrans' Proportionate Share of Net Pension Liability, the Schedule of Contributions – Pensions, the Schedule of Changes in Net Other Postemployment Benefits Liability and Related Ratios, and the Schedule of Contributions – Other Postemployment Benefits as listed in the table of contents be presented to supplement the financial statements. Such information, although not a part of the financial statements, is required by Governmental Accounting Stands Board ("GASB"), who considers it to be an essential part of financial reporting for placing the financial statements in an appropriate operational, economic, or historical context. We have applied certain limited procedures to the Required Supplementary Information in accordance with auditing standards generally accepted in the United States of America, which consisted of inquiries of management about the methods of preparing the information and comparing the information for consistency with management's responses to our inquiries, the financial statements, and other knowledge we obtained during our audit of the financial statements. We do not express an opinion or provide any assurance on the information because the limited procedures do not provide us with sufficient evidence to express an opinion or provide any assurance.

Management has omitted the Management's Discussion and Analysis ("MD&A") that accounting principles generally accepted in the United States of America require to be presented to supplement the financial statements. Such missing information, although not a part of the financial statements, is required by the GASB, who considers it to be an essential part of financial reporting for placing the financial statements in an appropriate operational, economic, or historical context. Our opinion on the financial statements is not affected by this missing information.

Supplementary Information

Our audit was conducted for the purpose of forming an opinion on the GTrans of the City' financial statements. The Schedule of Farebox Recovery Ratio Calculation and the Schedule of Proceeds Received and Expended are presented for purposes of additional analysis and are not a required part of the financial statements. Such information is the responsibility of management and was derived from and relates directly to the underlying accounting and other records used to prepare the GTrans' financial statements. Such information has been subjected to the auditing procedures applied in the audit of the GTrans' financial statements and certain additional procedures, including comparing and reconciling such information directly to the underlying accounting and other records used to prepare the financial statements or to the financial statements themselves, and other additional procedures in accordance with auditing standards generally accepted in the United States of America. In our opinion, the Schedule of Farebox Recovery Ratio Calculation and the Schedule of Proceeds Received and Expended are fairly stated, in all material respects, in relation to the GTrans' financial statements as a whole.

Other Reporting Required by *Government Auditing Standards*

In accordance with *Government Auditing Standards*, we have also issued our report dated December 7, 2023, on our consideration of the City's internal control over GTrans' financial reporting and on our tests of its compliance with certain provisions of laws, regulations, contracts, and grant agreements and other matters. The purpose of that report is solely to describe the scope of our testing of internal control over GTrans' financial reporting and compliance and the results of that testing, and not to provide an opinion on the effectiveness of the City's internal control over GTrans' financial reporting or on compliance. That report is an integral part of an audit performed in accordance with *Government Auditing Standards* in considering the City's internal control over GTrans' financial reporting and compliance.

The Pun Group, LLP

Santa Ana, California
December 7, 2023

THE PUN GROUP
ACCOUNTANTS & ADVISORS

200 E. Sandpointe Avenue, Suite 600
Santa Ana, California 92707

www.pungroup.cpa

REPORT ON INTERNAL CONTROL OVER FINANCIAL REPORTING AND ON COMPLIANCE (INCLUDING THOSE CONTAINED IN THE TDA STATUTES AND CALIFORNIA CODES OF REGULATIONS) AND OTHER MATTERS BASED ON AN AUDIT OF THE GTRANS' FINANCIAL STATEMENTS PERFORMED IN ACCORDANCE WITH *GOVERNMENT AUDITING STANDARDS*

Independent Auditors' Report

To the Honorable Mayor and the Members of City Council
of the City of Gardena
Gardena, California

We have audited, in accordance with the auditing standards generally accepted in the United States of America, the standards applicable to financial audits contained in *Government Auditing Standards* issued by the Comptroller General of the United States and the TDA Statutes and California Codes of Regulations, issued by California Department of Transportation, the financial statements of the GTrans Enterprise Fund ("GTrans") of the City of Gardena, California ("City"), as of and for the year ended June 30, 2023, and the related notes to the financial statements, and have issued our report thereon dated December 7, 2023.

Report on Internal Control Over Financial Reporting

In planning and performing our audit of the GTrans' financial statements, we considered the City's internal control over the GTrans' financial reporting ("internal control") as a basis for designing audit procedures that are appropriate in the circumstances for the purpose of expressing our opinion on the financial statements, but not for the purpose of expressing an opinion on the effectiveness of the City's internal control. Accordingly, we do not express an opinion on the effectiveness of the City's internal control.

A *deficiency in internal control* exists when the design or operation of a control does not allow management or employees, in the normal course of performing their assigned functions, to prevent, or detect and correct, misstatements on a timely basis. A *material weakness* is a deficiency, or a combination of deficiencies, in internal control, such that there is a reasonable possibility that a material misstatement of the GTrans' financial statements will not be prevented, or detected and corrected on a timely basis. A *significant deficiency* is a deficiency, or a combination of deficiencies, in internal control that is less severe than a material weakness, yet important enough to merit attention by those charged with governance.

Our consideration of internal control was for the limited purpose described in the first paragraph of this section and was not designed to identify all deficiencies in internal control that might be material weaknesses or significant deficiencies. Given these limitations, during our audit we did not identify any deficiencies in internal control that we consider to be material weaknesses. However, material weaknesses or significant deficiencies may exist that were not identified.

Report Compliance and Other Matters

As part of obtaining reasonable assurance about whether the GTrans' financial statements are free of material misstatement, we performed tests of the City's compliance with certain provisions of laws, regulations, contracts and grant agreements, noncompliance with which could have a direct and material effect on the determination of the GTrans' financial statement amounts. However, providing an opinion on compliance with these provisions was not an objective of our audit, and accordingly, we do not express such an opinion. The results of our tests disclosed no instances of noncompliance or other matters that are required to be reported under *Government Auditing Standards*.

Purpose of this Report

The purpose of this report is solely to describe the scope of our testing of internal control and compliance and the results of that testing, and not to provide an opinion on the effectiveness of the City's internal control or on compliance. This report is an integral part of an audit performed in accordance with *Government Auditing Standards* in considering the City's internal control and compliance. Accordingly, this communication is not suitable for any other purpose.

The Pun Group, LLP

Santa Ana, California
December 7, 2023

THE PUN GROUP
ACCOUNTANTS & ADVISORS

200 E. Sandpointe Avenue, Suite 600
Santa Ana, California 92707

www.pungroup.cpa

REPORT ON COMPLIANCE FOR THE TRANSIT OPERATOR REQUIRED BY THE TRANSPORTATION DEVELOPMENT ACT AND REPORT ON INTERNAL CONTROL OVER COMPLIANCE

Independent Auditors' Report

To the Honorable Mayor and the Members of City Council
of the City of Gardena
Gardena, California

Report on Compliance for the Transit Operator Required by the Transportation Development Act

Opinion on the City as the Transit Operator

We have audited the City of Gardena, California's (the "City") compliance with the types of compliance requirements described in §6667 of the California Code of Regulation, Title 21, Division 3, Chapter 3, Article 5.5 applicable to the City's compliance as a Transit Operator for the year ended June 30, 2023.

In our opinion, the City complied, in all material respects, with the compliance requirements referred to above that are applicable to the City as transit operator for the year ended June 30, 2023.

Basis for Opinion on the Compliance for the Transit Operator Required by the Transportation Development Act

We conducted our audit of compliance in accordance with auditing standards generally accepted in the United States of America ("GAAS"); the standards applicable to financial audits contained in *Government Auditing Standards*, issued by the Comptroller General of the United States ("Government Auditing Standards"); and Transportation Development Act ("TDA") Statutes and California Code of Regulations, July 2018 ("TDA Guidebook"), issued by the California Department of Transportation Division of Rail and Mass Transportation. Our responsibilities under those standards and the TDA Guidebook are further described in the Auditors' Responsibilities for the Audit of Compliance section of our report.

We are required to be independent of the City and to meet our other ethical responsibilities, in accordance with relevant ethical requirements relating to our audit. We believe that the audit evidence we have obtained is sufficient and appropriate to provide a basis for our opinion on compliance for the City as a transit operator. Our audit does not provide a legal determination of the City's compliance with the compliance requirements referred to above.

Responsibilities of Management for Compliance

Management is responsible for compliance with the requirements referred to above and for the design, implementation, and maintenance of effective internal control over compliance with the requirements of laws, statutes, regulations, rules, and provisions of contracts or grant agreements applicable to the City as a transit operator.

Auditors' Responsibilities for the Audit of Compliance

Our objectives are to obtain reasonable assurance about whether material noncompliance with the compliance requirements referred to above occurred, whether due to fraud or error, and express an opinion on the City's compliance based on our audit. Reasonable assurance is a high level of assurance but is not absolute assurance and therefore is not a guarantee that an audit conducted in accordance with GAAS, *Government Auditing Standards*, and the TDA Guidebook will always detect material noncompliance when it exists. The risk of not detecting material noncompliance resulting from fraud is higher than for that resulting from error, as fraud may involve collusion, forgery, intentional omissions, misrepresentations, or the override of internal control. Noncompliance with the compliance requirements referred to above is considered material if there is a substantial likelihood that, individually or in the aggregate, it would influence the judgment made by a reasonable user of the report on compliance about the City's compliance with the requirements of the transit operator as a whole.

In performing an audit in accordance with GAAS, *Government Auditing Standards*, and the TDA Guidebook, we:

- Exercise professional judgment and maintain professional skepticism throughout the audit.

- Identify and assess the risks of material noncompliance, whether due to fraud or error, and design and perform audit procedures responsive to those risks. Such procedures include examining, on a test basis, evidence regarding the City's compliance with the compliance requirements referred to above and performing such other procedures as we considered necessary in the circumstances.

- Obtain an understanding of the City's internal control over compliance relevant to the audit in order to design audit procedures that are appropriate in the circumstances and to test and report on internal control over compliance in accordance with the TDA Guidebook, but not for the purpose of expressing an opinion on the effectiveness of the City's internal control over compliance. Accordingly, no such opinion is expressed.

We are required to communicate with those charged with governance regarding, among other matters, the planned scope and timing of the audit and any significant deficiencies and material weaknesses in internal control over compliance that we identified during the audit.

Report on Internal Control Over Compliance

A *deficiency in internal control over compliance* exists when the design or operation of a control over compliance does not allow management or employees, in the normal course of performing their assigned functions, to prevent, or detect and correct, noncompliance with a compliance requirement on a timely basis. A *material weakness in internal control over compliance* is a deficiency, or combination of deficiencies, in internal control over compliance, such that there is a reasonable possibility that material noncompliance with a compliance requirement of the transit operator will not be prevented, or detected and corrected, on a timely basis. A *significant deficiency in internal control over compliance* is a deficiency, or a combination of deficiencies, in internal control over compliance with a compliance requirement that is less severe than a material weakness in internal control over compliance, yet important enough to merit attention by those charged with governance.

Our consideration of internal control over compliance was for the limited purpose described in the Auditors' Responsibilities for the Audit of Compliance section above and was not designed to identify all deficiencies in internal control over compliance that might be deficiencies, significant deficiencies, or material weakness in internal control over compliance. Given these limitations, during our audit we did not identify any deficiencies in internal control over compliance that we consider to be material weaknesses, as defined above. However, material weaknesses or significant deficiencies may exist that were not identified.

Our audit was not designed for the purpose of expressing an opinion on the effectiveness of internal control over compliance. Accordingly, no such opinion is expressed.

The purpose of this report on internal control over compliance is solely to describe the scope of our testing on internal control over compliance and the results of that testing based on the requirements of the §6667 of the California Codes of Regulation, Title 21, Division 3, Chapter 3, Article 5.5. Accordingly, this report is not suitable for any other purpose.

The Pun Group, LLP

Santa Ana, California
December 7, 2023

This page intentionally left blank.

THE PUN GROUP
ACCOUNTANTS & ADVISORS

200 E. Sandpointe Avenue, Suite 600
Santa Ana, California 92707

www.pungroup.cpa

INDEPENDENT ACCOUNTANTS' REPORT

To the Honorable Mayor and the Members of City Council
of the City of Gardena
Gardena, California

We have examined the City of Gardena, California's ("City") compliance with the compliance requirements for Measure R as described in Los Angeles County's the Traffic Relief and Rail Expansion Ordinance #08-01 for the year ended June 30, 2023. The City's management is responsible for City's compliance with those requirements. Our responsibility is to express an opinion on the City's compliance based on our examination.

Our examination was conducted in accordance with attestation standards established by the American Institute of Certified Public Accountants. Those standards require that we plan and perform the examination to obtain reasonable assurance about whether the City complied, in all material respects, with the compliance requirements referenced above. An examination involves performing procedures to obtain evidence about the City's compliance with those requirements. The nature, timing, and extent of the procedures selected dependent on our judgment, including an assessment of the risks of material noncompliance, whether due to fraud or error. We believe that the evidence we obtained is sufficient and appropriate to provide a reasonable basis for our opinion.

Attestation standards established by the American Institute of Certified Public Accountants require that we request a written statement from the City stating that the City's compliance that we examined has been accurately measured or evaluated.

We are required to be independent and to meet our other ethical responsibilities in accordance with relevant ethical requirements relating to the engagement.

Our examination does not provide a legal determination of the City's compliance with these requirements.

In our opinion, the City complied with the aforementioned requirements for the year ended June 30, 2023, is fairly stated, in all material respects.

This report is intended solely for the information and use of the members of the Measure R Independent Taxpayer Oversight Committee, the City Council, and management and is not intended to be and should not be used by anyone other than these specified parties. However, this report is a matter of public record, and its distribution is not limited.

The Pun Group, LLP

Santa Ana, California
December 7, 2023

This page intentionally left blank.

FINANCIAL STATEMENTS

This page intentionally left blank.

The GTrans Enterprise Fund of the City of Gardena
Statement of Net Position
June 30, 2023

ASSETS	
Current assets:	
Cash and cash equivalents	$ 21,522,326
Due from other governments	3,525,434
Accounts receivable, net	248,542
Inventories	744,644
Prepaid items	71,866
Total current assets	26,112,812
Noncurrent assets:	
Capital assets, net	59,036,668
Total assets	85,149,480
DEFERRED OUTFLOWS OF RESOURCES	
Deferred outflows of resources related to pensions	7,026,121
Deferred outflows of resources related to other postemployment benefits	2,510,479
Total deferred outflows of resources	9,536,600
LIABILITIES	
Current liabilities:	
Accounts payable	1,183,962
Accrued expenses	109,128
Accrued payroll and related taxes	229,701
Due to City of Gardena	7,093,382
Unearned revenues	17,386,473
Compensated absences - due within one year	360,173
Lease payable, due within one year	13,353
Subscription payable, due within one year	100,280
Bonds payable, due within one year	883,679
Total current liabilities	27,360,131
Noncurrent liabilities:	
Compensated absences - due in more than one year	1,440,692
Subscription payable, due in more than one year	128,304
Bonds payable, due in more than one year	18,981,156
Net pension liability	3,046,867
Net other postemployment benefits liability	7,726,172
Total noncurrent liabilities	31,323,191
Total liabilities	58,683,322
DEFERRED INFLOWS OF RESOURCES	
Deferred inflows of resources related to pensions	1,800,304
Deferred inflows of resources related to other postemployment benefits	739,416
Total deferred inflows of resources	2,539,720
NET POSITION	
Net investment in capital assets	57,966,058
Unrestricted (deficit)	(24,503,020)
Total net position	$ 33,463,038

See accompanying Notes to the Financial Statements.

The GTrans Enterprise Fund of the City of Gardena
Statement of Revenues, Expenses, and Changes in Net Position
For the Year Ended June 30, 2023

OPERATING REVENUES:	
Passenger fares	$ 1,571,058
Service charges for maintenance of City vehicles	126,831
Other	69,035
Total operating revenues	1,766,924
OPERATING EXPENSES:	
Salaries and benefits	15,950,503
Material and operations	6,223,928
Other operating expenses	2,305,674
Depreciation and amortization	3,504,186
Total operating expenses	27,984,291
OPERATING (LOSS)	(26,217,367)
NONOPERATING REVENUES (EXPENSES):	
Local transportation fund	7,023,418
Other local assistance	10,192,921
Federal transit assistance	4,100,000
State transit assistance fund	1,428,103
Interest income	361,480
Interest expense	(622,323)
Gain on disposal of assets	26,656
Total nonoperating revenues (expenses)	22,510,255
(LOSS) BEFORE CONTRIBUTIONS	(3,707,112)
CONTRIBUTIONS:	
Capital contributions	3,186,920
Transfers out	(1,967)
Total contributions and transfer	3,184,953
Changes in net position	(522,159)
NET POSITION:	
Beginning of year	33,985,197
End of year	$ 33,463,038

See accompanying Notes to the Financial Statements.

The GTrans Enterprise Fund of the City of Gardena
Statement of Cash Flows
For the Year Ended June 30, 2023

CASH FLOWS FROM OPERATING ACTIVITIES:	
Cash received from customers and users	$ 1,647,206
Cash payments to suppliers for goods and services	(8,633,791)
Cash payments to employees	(16,188,619)
Other receipts	195,866
Net cash used in operating activities	(22,979,338)
CASH FLOWS FROM NONCAPITAL FINANCING ACTIVITIES:	
Transferred (to) from the City	5,299,628
Principal payment on long term debt	(1,043,789)
Interest paid	(622,323)
Transit assistance funds received	25,139,678
Net cash provided by noncapital financing activities	28,773,194
CASH FLOWS FROM CAPITAL AND RELATED FINANCING ACTIVITIES:	
Cash received from capital contributions	3,186,920
Proceeds from sale of capital assets	26,656
Acquisition of capital assets	(3,186,920)
Net cash provided by capital and related financing activities	26,656
CASH FLOWS FROM INVESTING ACTIVITIES:	
Interest received	361,480
Net cash provided by investing activities	361,480
Net change in cash and cash equivalents	6,181,992
CASH AND CASH EQUIVALENTS:	
Beginning of year	15,340,334
End of year	$ 21,522,326
RECONCILIATION OF OPERATING (LOSS) TO NET CASH PROVIDED BY OPERATING ACTIVITIES:	
Operating (loss)	$ (26,217,367)
Adjustments to reconcile operating (loss) to net cash used in operating activities:	
Depreciation and amortization	3,504,186
Changes in operating assets, deferred outflows of resources, liabilities, and deferred inflows of resources:	
Decrease (increase) in accounts receivable	76,148
Decrease (increase) in inventories	81,743
Decrease (increase) in prepaid items	(19,848)
Decrease (increase) in deferred outflows of resources related to pensions	(5,799,993)
Decrease (increase) in deferred outflows of resources related to other postemployment benefits	(1,396,023)
Increase (decrease) in accounts payable	(106,353)
Increase (decrease) in accrued expenses	(59,731)
Increase (decrease) in accrued payroll and related liabilities	(459,134)
Increase (decrease) in compensated absences	18,091
Increase (decrease) in net pension liabilities	13,202,012
Increase (decrease) in net other postemployment benefits liabilities	1,813,748
Increase (decrease) in deferred inflows of resources related to pensions	(7,286,224)
Increase (decrease) in deferred inflows of resources related to other postemployment benefits	(330,593)
Net cash used in operating activities	$ (22,979,338)

See accompanying Notes to the Financial Statements.

This page intentionally left blank.

Note 1 – Summary of Significant Accounting Policies

A. The Reporting Entity

The financial statements of GTrans, previously known as the Municipal Bus Lines, Enterprise Fund ("GTrans") of the City of Gardena, California (the "City") are intended to present the financial position and results of the operations of the bus line services. The financial statements of the GTrans are included in the basic financial statements of the City. The Annual Comprehensive Financial Report can be obtained from the City's Finance Department (1700 West 162nd Street, Gardena, CA 90247) and the City's website (www.cityofgardena.org).

As an operator of a public transportation system, the City is eligible for Transportation Development Act ("TDA") Public Utilities Code Section 99260 ("TDA Section 99260") funds. These funds were allocated by the Los Angeles County Metropolitan Transportation Authority ("MTA") to supplement the City's transit operations.

B. Financial Statements Presentation, Measurement Focus, and Basis of Accounting

The accompanying financial statements present only the GTrans and are not intended to present the financial position, changes in financial position, or cash flows of the City in accordance with accounting principles generally accepted in the United States of America ("U.S. GAAP").

The accounting policies of the GTrans are in accordance with U.S. GAAP applicable to governmental units. The Governmental Accounting Standards Board ("GASB") is the accepted standard-setting body for establishing accounting and financial reporting principles.

The financial statements are prepared using the *"economic resources"* measurement focus and the accrual basis of accounting. Accordingly, all assets, deferred outflows of resources, liabilities, and deferred inflows of resources (whether current or noncurrent) are included on the Statement of Net Position. The Statement of Revenues, Expenses, and Changes in Net Position present increases (revenues) and decreases (expenses) in total net position. Under accrual basis of accounting, revenues are recognized in the accounting period in which they are earned and expenses are recognized in the period when a liability is incurred.

Operating revenues are those revenues that are generated from the primary operations of the GTrans. All other revenues are reported as nonoperating revenues. Operating expenses are those expenses that are essential to the primary operations of the GTrans. All other expenses are reported as nonoperating expenses.

C. Cash and Cash Equivalents

GTrans' cash is pooled with the City's internal investment pool. Cash on hand and demand deposits pooled with the City are considered as cash and cash equivalents.

D. Grants

Grant revenues and receivables are recorded when earned on grants that have been approved and funded by the grantor. Grant sources include Federal Transit Administration, Transportation Development Act, State Transit Assistance, Measure R, Measure M, Proposition 1B, Proposition A, and Proposition C.

Note 1 – Summary of Significant Accounting Policies (Continued)

E. Inventories

Inventories consist of materials and supplies which are valued at cost on a first-in, first-out basis. Inventories are recorded as an expense when consumed for financial statement purposes, but recorded as inventory when purchased.

F. Prepaid items

Certain payments to vendors reflect costs applicable to future accounting periods and are recorded as prepaid items in the financial statements.

G. Capital Assets

GTrans' capital assets include buildings, buses, vehicles, furniture and equipment which are recorded at historical cost or estimated historical cost if actual cost is not available. Donated capital assets are valued at their acquisition value. GTrans' policy is to capitalize all assets with a unit cost of $5,000 or more, and a useful life of more than one year. Capital assets used in operations are depreciated over their estimated useful lives using the straight-line method. The lives used for depreciation purposes are as follows:

The intangible right-to-use asset includes lease asset or subscription-based information technology arrangements ("SBITA") asset ("subscription asset"). These intangible assets are recorded at the amount of the initial measurement of the lease liabilities or SBITA liabilities ("subscription liabilities") and adjusted by any lease made to the lessor or subscription payments to the SBITA vendor at or before the commencement of the lease or subscription term, less any incentives received from the lessor or SBITA vendor at or before the commencement of the lease or subscription term along with any initial direct costs that are ancillary charges necessary to place the lease assets into service or subscription implementation costs. Lease assets are amortized using the straight-line method over the shorter of the lease term or the useful life of the underlying asset, unless the lease contains a purchase option that GTrans has determined is reasonably certain of being exercised. In this case, the lease asset is amortized over the useful life of the underlying asset. Subscription assets are amortized over the shorter of the subscription term or the useful life of the underlying IT assets.

Buildings/structures and improvements	40 years
Machinery and equipment	3-15 years
Buses	12 years
Furniture and fixtures	3-10 years
Infrastructure	30-60 years

H. Deferred Outflows and Inflows of Resources

The statement of net position reports separate sections for deferred outflows of resources and deferred inflows of resources, when applicable.

Deferred Outflows of Resources represent a consumption of net assets that applies to future periods.

Deferred Inflows of Resources represent an acquisition of net assets that applies to future periods.

I. Unearned Revenue

Unearned revenue is recognized for transactions for which revenue has not yet been earned. Typical transactions recorded as unearned revenues are prepaid charges for services; grants received but not yet earned.

Note 1 – Summary of Significant Accounting Policies (Continued)

J. Compensated Absences

It is the City's policy to accrue annual leave when incurred. A liability is recorded for unused sick leave balances only to the extent that it is probable that the unused balances will result in termination payments. This is estimated by including in the liability the unused balances of employees currently entitled to receive termination benefits, as well as those who are expected to become eligible to receive termination benefits as a result of continuing their employment with the City. Other amounts of unused sick leave are excluded from the liability since their payment is contingent solely upon the occurrence of a future event (illness) which is outside the control of the City and the employee.

K. Leases

Lessee

GTrans has a policy to recognize a lease liability and a right-to-use asset (lease asset) in the financial statements with an initial, individual value of $5,000 or more with a lease term greater than one year. Variable payments based on future performance or usage of the underlying assets are not included in the measurement of the lease liability.

At the commencement of a lease, the lease liability is measured at the present value of payments expected to be made during the lease term. Subsequently, the lease liability is reduced by the principal portion of lease payments made.

Lease assets are recorded at the amount of the initial measurement of the lease liabilities and modified by any lease payments made to the lessor at or before the commencement of the lease term, less any lease incentives received from the lessor at or before the commencement of the lease term along with any initial direct costs that are ancillary charges necessary to place the lease assets into service. Lease assets are amortized using the straight–line method over the shorter of the lease term or the useful life of the underlying asset, unless the lease contains a purchase option that the State has determined is reasonably certain of being exercised. In this case, the lease asset is amortized over the useful life of the underlying asset.

Key estimates and judgments related to leases include how GTrans determines (1) the discount rate it uses to discount the expected lease payments to present value, (2) lease term, and (3) lease payments.

- GTrans uses the interest rate charged by the lessor as the discount rate. When the interest rate charged by the lessor is not provided, GTrans generally uses its estimated incremental borrowing rate as the discount rate for leases.
- The lease term includes the noncancelable period of the lease, plus any option periods that are reasonably certain to be exercised.
- Lease payments included in the measurement of the lease liability are composed of fixed payments and purchase option price that GTrans is reasonably certain to exercise. GTrans monitors changes in circumstances that would require a remeasurement of a lease and will remeasure any lease asset and liability if certain changes occur that are expected to significantly affect the amount of the lease liability.

Lease assets are reported as right-to-use along with other capital assets and lease liabilities are reported on the statement of net position.

Note 1 – Summary of Significant Accounting Policies (Continued)

L. Subscription Based Information Technology Arrangements Liabilities

GTrans recognizes subscription liabilities with an initial, individual value of $5,000 or more with a subscription term greater than one year. Variable payments based on future performance, usage of the underlying IT assets, or number of user seats are not included in the measurement of the subscription liability.

At the commencement of a subscription, GTrans initially measures the subscription liability at the present value of subscription payments expected to be made during the subscription term. Subsequently, the lease liability is reduced by the principal portion of subscription payments made.

Subscription assets are recorded at the amount of the initial measurement of the subscription liabilities, less any payments made to the SBITA vendor before the commencement of the subscription term, and capitalizable initial implementation cost, less any incentives received from the SBITA vendor at or before the commencement of the subscription term.

- Preliminary Project Stage: Outlays are expensed as incurred.
- Initial Implementation Stage: Outlays are capitalized as an addition to the subscription asset.
- Key estimates and judgments related to subscription liabilities include how the City determines (1) the discount rate it uses to discount the expected subscription payments to present value, (2) subscription term, and (3) subscription payments.
- Operation and Additional Implementation Stage: Outlays are expensed as incurred unless they meet specific capitalization criteria.

Upon adoption, GTrans elected to exclude the capitalizable outlays associated with the initial implementation stage and the operation and additional implementation stage that were incurred prior to the implementation of this Statement in the measurement of subscription assets as of July 1, 2022.

Subscription assets are reported in capital assets and subscription liabilities are reported with long-term liabilities on the statement of net position. Subscription assets are amortized using the straight-line method over the shorter of the subscription term or the useful life of the underlying IT asset, unless the subscription contains a purchase option that GTrans has determined is reasonably certain of being exercised. In this case, the subscription asset is amortized over the useful life of the underlying IT asset.

- GTrans uses the interest rate charged by the SBITA vendor as the discount rate. When the interest rate charged by the lessor is not provided, GTrans generally uses its estimated incremental borrowing rate as the discount rate for subscription liabilities.
- The subscription term includes the noncancellable period of the SBITA. Subscription payments included in the measurement of the subscription liability are composed of fixed payments.

GTrans monitors changes in circumstances that would require a remeasurement of its SBITA and will remeasure any subscription asset or liability if certain changes occur that are expected to significantly affect the amount of the subscription liability.

Note 1 – Summary of Significant Accounting Policies (Continued)

M. Pensions

For purposes of measuring the net pension liability, deferred outflows of resources and deferred inflows of resources related to pensions, and pension expense, information about the fiduciary net position of the plans and additions to/deductions from the plans' fiduciary net position have been determined on the same basis as they are reported by the plans. For this purpose, benefit payments (including refunds of employee contributions) are recognized when due and payable in accordance with benefit terms. Investments are reported at fair value in the CalPERS trust.

The following timeframes are used for pension reporting:

CalPERS	June 30, 2023
Valuation Date	June 30, 2021
Measurement Date	June 30, 2022
Measurement Period	July 1, 2021 to June 30, 2022

Gains and losses related to changes in total pension liability and fiduciary net position are recognized in pension expense systematically over time. The first amortized amounts are recognized in pension expense for the year the gain or loss occurs. The remaining amounts are categorized as deferred outflows and deferred inflows of resources related to pensions and are to be recognized in future pension expense. The amortization period differs depending on the sources of the gain or loss. The difference between projected and actual earnings is amortized on a straight-line basis over 5 years. All other amounts are amortized on a straight-line basis over the average expected remaining service lives of all members that are provided with benefits (active, inactive, and retired) as of the beginning of the measurement period.

N. Other Postemployment Benefits ("OPEB") Plan

For the purpose of measuring the net OPEB liability, deferred outflows of resources and deferred inflows of resources related to OPEB, and OPEB expense, information about the fiduciary net position of the City's OPEB Plan and additions to/deductions from the OPEB Plan's fiduciary net position have been determined on the same basis as they are reported by the Plan. For this purpose, the OPEB Plan recognizes benefit payments when due and payable in accordance with the benefit terms. Investments are reported at fair value in the CalPERS trust.

The following timeframes are used for OPEB reporting:

OPEB	June 30, 2023
Valuation Date	June 30, 2022
Measurement Date	June 30, 2022
Measurement Period	July 1, 2021 to June 30, 2022

Gains and losses related to changes in total OPEB liability and fiduciary net position are recognized in OPEB expense systematically over time. The first amortized amounts are recognized in OPEB expense for the year the gain or loss occurs. The remaining amounts are categorized as deferred outflows and deferred inflows of resources related to OPEB and are to be recognized in future OPEB expense. The amortization period differs depending on the sources of the gain or loss. The difference between projected and actual earnings is amortized on a straight-line basis over 5 years. All other amounts are amortized on a straight-line basis over the average expected remaining service lives of all members that are provided with benefits (active, inactive, and retired) as of the beginning of the measurement period.

Note 1 – Summary of Significant Accounting Policies (Continued)

O. Net Position

Net position is classified as follows:

Net Investment in Capital Assets – This component of net position consists of capital assets, net of accumulated depreciation and amortization, reduced by the outstanding balances of accounts payable, retention payable, and debt that are attributable to the acquisition, construction, or improvement of those assets.

Restricted – This component of net position consists of restricted assets reduced by liabilities and deferred outflows and inflows of resources related to those assets.

Unrestricted – This component of net position is the net amount of the assets, deferred outflows of resources, liabilities, and related inflows of resources that are not included in the determination of net investment in capital assets or the restricted component of net position.

At June 30, 2023, there was no "restricted" component of net position for the GTrans.

P. Use of Estimates

The preparation of financial statements in accordance with U.S. GAAP requires management to make estimates and assumptions. These estimates and assumptions affect certain reported amounts and disclosures. Accordingly, actual results could differ from these estimates and assumptions.

Q. Implementation of New GASB Pronouncements

During the fiscal year ended June 30, 2023, implemented the following new GASB pronouncements:

In May 2020, GASB issued Statement No. 96, Subscription-Based Information Technology Arrangements (GASB Statement No. 96), to better meet the information needs of financial statement users by (a) establishing uniform accounting and financial reporting requirements for SBITAs; (b) improving the comparability of financial statements among governments that have entered into SBITAs; and (c) enhancing the understandability, reliability, relevance, and consistency of information about SBITAs. Under this Statement, a government is required to recognize a subscription liability and an intangible right-to-use subscription asset. The effective date of GASB Statement No. 96 is for fiscal years beginning after June 15, 2022. Implementation of this Statement resulted in restatement of beginning balance of capital assets (Note 4) and long-term debt liabilities (Note 6) at July 1, 2022.

Note 2 – Cash and Investments

Petty cash and the GTrans' share of the City's cash and investments at June 30, 2023 was $21,522,326.

Cash is deposited in the City's internal investment pool, which is reported at the amortized cost. GTrans does not own specifically identifiable securities in the City's pool. Interest income is allocated based on average cash balances. Investment policies and associated risk factors applicable to GTrans are those of the City and are included in the City's basic financial statements. Please refer to the City's Annual Comprehensive Financial Report for related disclosures for cash and investments.

Note 3 – Due from Other Governments

Due from other governments consisted of the following at June 30, 2023:

Los Angeles County Metropolitan Transportation Authority	$ 2,467,295
South Coast Air Quality Management District	350,000
U.S. Department of Transportation Federal Transit Administration	708,139
Total	$ 3,525,434

Note 4 – Capital Assets

Summary of changes in capital assets of the GTrans for the year ended June 30, 2023 is as follows:

	Balance July 1, 2022 (As Restated)	Additions	Deletions	Reclassification	Balance June 30, 2023
Nondepreciable assets:					
Land	$ 12,956,405	$ -	$ -	$ -	$ 12,956,405
Construction in progress	4,870,249	3,182,735		(248,550)	7,804,434
Total nondepreciable assets	17,826,654	3,182,735	-	(248,550)	20,760,839
Capital assets, being depreciated:					
Building	26,962,077	-	-	-	26,962,077
Building improvements	12,931,350	-	-	-	12,931,350
Buses	44,887,488	-	(1,536,982)	24,765	43,375,271
Machinery and equipment	9,787,371	-	(30,508)	196,935	9,953,798
Furniture and fixtures	1,625,521	-	(12,482)	26,850	1,639,889
Infrastructure	1,010,673	-	-	-	1,010,673
Total capital assets, being depreciated	97,204,480	-	(1,579,972)	248,550	95,873,058
Less accumulated depreciation:	(56,182,590)	(3,253,834)	1,579,972	-	(57,856,452)
Total capital assets, being depreciated, net	41,021,890	(3,253,834)	-	248,550	38,016,606
Intangible assets, being amortized:					
Right-to-use lease assets	304,112	26,484	(304,112)	-	26,484
Right-to-use subscription assets	167,231	163,804	-	-	331,035
Total intangible assets, being amortized	471,343	190,288	(304,112)	-	357,519
Less accumulated amortization:	(152,056)	(250,352)	304,112	-	(98,296)
Total intangible assets, being amortized, net	319,287	(60,064)	-	-	259,223
Total capital assets, net	$ 59,167,831	$ (131,163)	$ -	$ -	$ 59,036,668

Depreciation and amortization expenses of the GTrans were in the amounts of $3,253,834 and $250,352, respectively for the year ended June 30, 2023.

Note 5 – Unearned Revenues

Unearned revenues represent excess operating and excess capital assistance. The following represents the amount at June 30, 2023:

Proposition A - Local Return	$ 4,073,233
Proposition A - Fare Subsidy	2,731,309
Measure M - Local Return	5,098,086
Measure R - Bus Operations	4,775,307
Measure R - Capital	361,499
California Department of Transportation - Low Carbon Transit Operation Program	269,739
Others	77,300
Total	$ 17,386,473

Note 6 – Long-Term Liabilities

Summary of changes in long-term liabilities of the GTrans for the year ended June 30, 2023 are as follows:

	Balance July 1, 2022 (As Restated)	Additions	Deletions	Balance June 30, 2023	Due within One Year	Due in more One Year
2020 Taxable Pension Obligation Bonds - publicly offered	$20,634,119	$ -	$ (769,284)	$19,864,835	$ 883,679	$18,981,156
Lease payable	158,923	26,484	(172,054)	13,353	13,353	-
Subscription payable	167,231	163,804	(102,451)	228,584	100,280	128,304
Compensated absences	1,782,774	1,038,967	(1,020,876)	1,800,865	360,173	1,440,692
Total	$22,743,047	$ 1,229,255	$ (2,064,665)	$21,907,637	$ 1,357,485	$20,550,152

2020 Taxable Pension Obligation Bonds – Original Issuance $101,490,000 ($22,296,415 for Business-Type Activities)

In November 2020, the City issued the Taxable Pension Obligation Bonds, Series 2020 in the amount of $101,490,000. The purpose of the bonds was to finance a portion of the City's unfunded accrued actuarial liability to the California Public Employees' Retirement System (CalPERS) for the benefit of the City's employees and to pay the costs of issuance of the bonds. Of the original $101,490,000 of bond principal issued $21,306,850 was allocated to GTrans.

The bonds accrue interest at rates between 1.081% and 3.363%. Interest on the bonds is payable semiannually on each April 1 and October 1, commencing April 1, 2021. Principal payments are due in annual installments ranging from $210,000 and $7,525,000, commencing April 1, 2021 through April 1, 2039. The bonds are not subject to optional and mandatory redemption prior to maturity. The bond debt service payments will be made from the debt service funds.

The amount outstanding at June 30, 2023 totaled $19,864,835. The annual debt service requirement on these bonds are as follows:

Note 6 – Long-Term Liabilities (Continued)

2020 Taxable Pension Obligation Bonds – Original Issuance $101,490,000 ($22,296,415 for Business-Type Activities) (Continued)

Fiscal Year	Principal	Interest	Total
2024	$ 883,679	$ 606,862	$ 1,490,541
2025	1,007,520	593,589	1,601,109
2026	1,065,243	576,441	1,641,684
2027	1,086,233	554,433	1,640,666
2028	1,111,421	528,733	1,640,154
2029-2033	6,046,170	2,158,747	8,204,917
2034-2038	7,080,977	1,121,078	8,202,055
2039	1,583,592	60,874	1,644,466
Total	$19,864,835	$ 6,200,757	$26,065,592

Lease Payable

GTrans has entered leases for the machine and equipment uses. The terms of the agreement was 24 months. The calculated interest rate used was 2.024%.

Principal and interest payments to maturity at June 30, 2023 are as follows:

Fiscal Year	Principal	Interest	Total
2024	$ 13,353	$ 147	$ 13,500

Subscription Payable

GTrans has entered into subscriptions for information technology arrangements. The terms of the arrangements range from 24 to 60 months with implicit rates used between 0.552% to of 3.305%. Principal and interest to maturity are as follows:

Principal and interest payments to maturity at June 30, 2023 are as follows:

Fiscal Year	Principal	Interest	Total
2024	$ 100,280	$ 5,775	$ 106,055
2025	100,924	3,329	104,253
2026	16,097	850	16,947
2027	11,283	373	11,656
Total	$ 228,584	$ 10,327	$ 238,911

Compensated Absences

All vested vacation and compensatory leave time are recognized as an expense and as a liability in the business-type funds at the time the liability vests. GTrans funds have been used to liquidate the liability. The balance outstanding at June 30, 2023 was $1,800,865.

Note 7 – Employees' Retirement Plan

General Information about the Pension Plan

Plan Description

The GTrans participates in the City's pension plan. The City contributes to the California Public Employees Retirement System ("CalPERS") miscellaneous plan, an agent multiple-employer defined benefit pension plan. CalPERS acts as a common investment and administrative agent for participating public entities within the State of California. Benefit provisions and all other requirements are established by state statue and City ordinance. A full description of the pension plan regarding number of employees covered, benefit provisions, assumptions (for funding, but not accounting purposes), and membership information are listed in the Annual Actuarial Valuation Report. This report and CalPERS' audited financial statements are publicly available reports that can be obtained at CalPERS' website under Forms and Publications (www.calpers.ca.gov/page/forms-publications).

Benefit Provided

CalPERS provides retirement and disability benefits, annual cost-of-living adjustments, and death benefits to plan members and beneficiaries. A classic CalPERS member becomes eligible for service retirement upon attainment of age 50 with at least 5 years of credited service. PEPRA miscellaneous members become eligible for service retirement upon attainment of age 52 with at least 5 years of service. The service retirement benefit is a monthly allowance equal to the product of the benefit factor, years of service, and final compensation. The final compensation is the monthly average of the member's highest 36 or 12 consecutive months' full-time equivalent monthly pay. Retirement benefits for classic miscellaneous employees are calculated as 2% of average final 12 months compensation. Retirement benefits for PEPRA miscellaneous employees are calculated as 2% of the average final 36 months compensation.

Participant is eligible for non-industrial disability retirement if the participant becomes disabled and has at least 5 years credited service. There is no special age requirement. The standard non-industrial disability retirement benefit is a monthly allowance equal to 1.8 percent of final compensation, multiplied by service.

Industrial disability benefits are not offered to miscellaneous employees.

An employee's beneficiary may receive the basic death benefit if the employee becomes deceased while actively employed. The employee must be actively employed with the City to be eligible for this benefit. An employee's survivor who is eligible for any other pre-retirement death benefit may choose to receive that death benefit instead of this basic death benefit. The basic death benefit is a lump sum in the amount of the employee's accumulated contributions, where interest is currently credited at 7.65 percent per year, plus a lump sum in the amount of one month's salary for each completed year of current service, up to a maximum of six months' salary. For purposes of this benefit, one month's salary is defined as the member's average monthly full-time rate of compensation during the 12 months preceding death. Upon the death of a retiree, a one-time lump sum payment of $500 will be made to the retiree's designated survivor(s), or to the retiree's estate.

Benefit terms provide for annual cost-of-living adjustments to each employee's retirement allowance. Beginning the second calendar year after the year of retirement, retirement and survivor allowances will be annually adjusted on a compound basis by 2 percent.

Note 7 – Employees' Retirement Plan (Continued)

General Information about the Pension Plan (Continued)

Employees Covered by Benefit Terms

At June 30, 2021, the valuation date, the following GTrans' employees were covered by the benefit terms under the City's miscellaneous plan:

Active employees	130
Transferred and terminated employees	66
Retired Employees and Beneficiaries	74
Total	270

Contributions

Section 20814(c) of the California Public Employees' Retirement Law ("PERL") requires that the employer contribution rates for all public employers are determined on an annual basis by the actuary and shall be effective on the July 1 following notice of a change in the rate. The total plan contributions are determined through CalPERS' annual actuarial valuation process. The actuarially determined rate is the estimated amount necessary to finance the costs of benefits earned by employees during the year, with an additional amount to finance any unfunded accrued liability. The employer is required to contribute the difference between the actuarially determined rate and the contribution rate of employees. For the measurement period ended June 30, 2022, the employer's contribution rates were 9.25%. The active classic miscellaneous employee contribution rate was 7% of annual pay and the active PEPRA miscellaneous employee contribution rate was 6.75% of annual pay.

Net Pension Liability

Actuarial Methods and Assumption Used to Determine Total Pension Liability

For the measurement period ended June 30, 2022, the total pension liability was determined by rolling forward the June 30, 2021 total pension liability. The June 30, 2021 total pension liabilities were based on the following actuarial methods and assumptions:

Actuarial Cost Method	Entry Age Normal
Actuarial Assumptions:	
Discount Rates	6.90%
Inflation	2.30%
Salary Increases	Varies by Entry Age and Service
Mortality Rate Table[1]	Derived using CalPERS's Membership Data for all Funds.
Post Retirement Benefit Increase	In 2021, the lesser of contract COLA or 2.30% until Purchasing Power Protection allowance floor on purchasing power applies, 2.30% thereafter

[1] The mortality table used was developed based on CalPERS-specific data. The probabilities of mortality are based on the 2021 CalPERS Experience Study for the period from 2001 to 2019. Pre-retirement and Post-retirement mortality rates include generational mortality improvement using 80% of Scale MP-2020 published by the Society of Actuaries. For more details on this table, please refer to the CalPERS Experience Study and Review of Actuarial Assumptions report from November 2021 that can be found on the CalPERS website.

Note 7 – Employees' Retirement Plan (Continued)

Net Pension Liability (Continued)

Change of Assumptions

Effective with the June 30, 2021 valuation date (2022 measurement date), the accounting discount rate was reduced from 7.15% to 6.90%. in determining the long-term expected rate of return, CalPERS took into account long-term market return expectations as well as the expected pension and fund cash flows. Projected returns for all asset classes are estimated, combined with risk estimates, and are used to project compound (geometric) returns over the long term. The discount rate used to discount liabilities was informed by the long-term projected portfolio return. In addition, demographic assumptions and the inflation rate assumption were changed in accordance with the 2021 CalPERS Experience Study and Review of Actuarial Assumptions.

Long-Term Expected Rate of Return

The long-term expected rate of return on pension plan investments was determined using a building-block method in which expected future real rates of return (expected returns, net of pension plan investment expense and inflation) are developed for each major asset class.

In determining the long-term expected rate of return, CalPERS took into account both short-term and long-term market return expectations. Using historical returns of all of the funds' asset classes, expected compound (geometric) returns were calculated over the next 20 years using a building-block approach. The expected rate of return was then adjusted to account for assumed administrative expenses of 10 Basis points.

The expected real rates of return by asset class for 2022 are as follows:

Asset Class[1]	Assumed Asset Allocation	Real Return[1, 2]
Global Equity - Cap-weighted	30.00%	4.54%
Global Equity - Non-Cap-weighted	12.00%	3.84%
Private Equity	13.00%	7.28%
Treasury	5.00%	0.27%
Mortgage-backed Securities	5.00%	0.50%
Investment Grade Corporates	10.00%	1.56%
High Yield	5.00%	2.27%
Emerging Market Debt	5.00%	2.48%
Private Debt	5.00%	3.57%
Real Assets	15.00%	3.21%
Leverage	-5.00%	-0.59%
	100.00%	

[1]An expected inflation of 2.30% used for this period.

[2]Figures are based on the 2021 Asset Liability Management study.

Discount Rate

The discount rate used to measure the total pension liability was 6.90%. The projection of cash flows used to determine the discount rate assumed that contributions from plan members will be made at the current member contribution rates and that contributions from employers will be made at statutorily required rates, actuarially determined. Based on those assumptions, the Plan's fiduciary net position was projected to be available to make all projected future benefit payments of current plan members. Therefore, the long-term expected rate of return on plan investments was applied to all periods of projected benefit payments to determine the total pension liability.

Note 7 – Employees' Retirement Plan (Continued)

Changes in the Net Pension Liability

Proportionate Share of Net Pension Liability

GTrans' proportionate share of net pension liability of the City's miscellaneous plan is determined by the City's CalPERS long term projected contribution made by GTrans over the total miscellaneous plan contribution. The following table shows GTrans' proportionate share of the City's miscellaneous plan net pension liability over the measurement period ended June 30, 2022.

	Increase (Decrease)		
	Total Pension Liability (a)	Plan Fiduciary Net Position (b)	Net Pension Liability (c) = (a) - (b)
Balance at June 30, 2021 (Valuation Date)	$ 85,386,294	$ 95,541,439	$ (10,155,145)
Balance at June 30, 2022 (Measurement Date)	85,617,067	82,570,200	3,046,867
Net Changes during 2021-2022	230,773	(12,971,239)	13,202,012

The GTrans' proportionate shares of the net pension liabilities are as follows:

Measurement Date	2022
June 30, 2021	46.7030%
June 30, 2022	45.3608%
Change - Increase (Decrease)	-1.3422%

Sensitivity of the Net Pension Liability to Changes in the Discount Rate

The following presents the net pension liability of the Plan as of the measurement date of June 30, 2022, calculated using the discount rate of 6.90%, as well as what the net pension liability would be if it were calculated using a discount rate that is 1 percentage-point lower (5.90%) or 1 percentage-point higher (7.90%) than the current rate:

	Plan's Net Pension Liability		
Measurement Date	Discount Rate - 1% (5.90%)	Current Discount Rate (6.90%)	Discount Rate + 1% (7.90%)
June 30, 2022	$ 14,315,195	$ 3,046,867	$ (6,210,181)

Pension Plan Fiduciary Net Position

Detailed information about the plan's fiduciary net position is available in the separately issued CalPERS financial report.

Pension Expense and Deferred Outflows and Inflows of Resources Related to Pensions

For the measurement period ended June 30, 2022, the GTrans incurred a pension expense of $993,526.

Note 7 – Employees' Retirement Plan (Continued)

Pension Expense and Deferred Outflows and Inflows of Resources Related to Pensions (Continued)

As of measurement date of June 30, 2022, GTrans had deferred outflows and deferred inflows of resources related to pensions as follows:

	Measurement Date June 30, 2022	
	Deferred outflows of resources	Deferred inflows of resources
Contribution made after the measurement date	$ 877,731	$ -
Difference between expected and actual experience	-	(1,800,304)
Changes in assumption	1,668,613	-
Net difference between projected and actual earning on pension plan investments	4,479,777	-
Total	$ 7,026,121	$ (1,800,304)

The amounts above are net of outflows and inflows of resources recognized in the 2021-2022 measurement period expense.

The expected average remaining service lifetime ("EARSL") is calculated by dividing the total future service years by the total number of plan participants (active, inactive, and retired). The EARSL for the miscellaneous plan for the 2021-2022 measurement periods is 3.2 years, which was obtained by dividing the total service years of 3,447 (the sum of remaining service lifetimes of the active employees) by 1,087 (the total number of participants: active, inactive, and retired), respectively.

$877,731 reported as deferred outflows of resources related to pensions resulting from the GTrans' portion of the City's contributions subsequent to the measurement date are recognized as a reduction of the net pension liability in the year ending June 30, 2024. Other amounts reported as deferred outflows and deferred inflows of resources related to pensions will be recognized in the future pension expense as follows:

Deferred Outflows/ (Inflows) of Resources Miscellaneous Plan	
Year Ended June 30	Amounts
2023	$ 559,626
2024	697,340
2025	455,398
2026	2,635,722
2027	-
Thereafter	-
Total	$ 4,348,086

Note 8 – Net Other Postemployment Benefits Liability ("OPEB")

General Information about the OPEB Plan

Plan Description

Plan Administration

The City's governing board administers the Postemployment Benefits Plan (the "Plan"). The Plan is a single employer defined benefit plan that is used to provide postemployment benefits other than pensions ("OPEB") for eligible retirees. The Plan provides medical insurance benefits to eligible retirees of the transportation enterprises. Benefits are provided through the City's self-insured plan and Kaiser. The City's governing board has the authority to establish and amend the benefit terms as contained within the labor agreements.

Benefits Provided

The City provides retiree health benefits to eligible retirees and dependents based on employment group and the employee's classification as either Classic or PEPRA under CalPERS.

Gardena Municipal Employees Association (GMEA) members:

Tier 1: Classic employees hired before July 1, 2002 are eligible to retire at age 55 with 13 years of service. City paid health coverage is at the two-party plan rate.

Tier 2: Employees hired between July 1, 2002 and July 1, 2021:

a) Classic employees hired on or after July 1, 2002 and before January 1, 2013 may retire at age 55 with 20 years of service. City paid health coverage is at the retiree only plan rate.

b) PEPRA employees hired on or after January 1, 2013 and before July 1, 2021, are eligible to retire at age 62 with 20 years of service. City paid health coverage is at the retiree only plan rate.

Tier 3: Employees hired on or after July 1, 2021 earn benefits by the following minimum requirements:

a) Twenty (20) years of full-time service with the City earns 75% of single party rate; or

b) Twenty-five (25) years of full-time service earns 100% of the single party rate; and

c) Enrollment in an any health insurance plan offered by the City for the minimum years of service; and

d) Age fifty-five (55) years for Classic employees or sixty-two (62) years for PEPRA employees for full CalPERS service retirement; and

e) Retiree coverage shall terminate upon the date the retiree becomes Medicare eligible or death of the retiree, whichever occurs first.

Gardena Municipal Employees Organization (GMEO) members:

Tier 1: Classic employees hired before March 15, 2000 are eligible to retire at age 55 with 13 years of service. City paid health coverage is at the two-party plan rate.

Note 8 – Net Other Postemployment Benefits Liability ("OPEB") (Continued)

General Information about the OPEB Plan (Continued)

Plan Description (Continued)

Benefits Provided (Continued)

Tier 2: Employees hired between March 15, 2000 and January 1, 2013:

a) Classic employees hired between March 15, 2000 and December 31, 2008 may retire at age 55 with 13 years of service. City paid health coverage is at the retiree only plan rate. Spousal coverage is available with an employee contribution of $175 per month.

b) Classic employees hired on or after January 1, 2009, are eligible to retire at age 55 with 13 years of service. City paid health coverage is at the retiree only plan rate. Spousal coverage is available with an employee contribution of $250 per month.

Tier 3: PEPRA employees hired on or after January 1, 2013, are eligible to retire at age 62 with 20 years of service. City paid health coverage is at the retiree only plan rate. Spousal coverage is available with an employee contribution of $250 per month

Tier 4: Employees hired on or after July 1, 2021 earn benefits by the following minimum requirements:

a) Twenty (20) years of full-time service with the City earns 75% of single party rate; or

b) Twenty-five (25) years of full-time service earns 100% of the single party rate; and

c) Enrollment in an any health insurance plan offered by the City for the minimum years of service; and

d) Age fifty-five (55) years for Classic employees and age sixty-two (62) for PEPRA employees for full CalPERS service retirement; and

e) Retiree coverage shall terminate upon the date the retiree becomes Medicare eligible or death of the retiree, whichever occurs first.

The benefits provided for retirees are the same as for active employees of the City. Lifetime benefits are provided for eligible GMEA and GMEO members hired before July 1, 2021. Benefits cease at age 65 for all members hired on or after July 1, 2021. The City contributes to the cost of health premiums up to the applicable cap of $1,498 and $1,329 per month for the calendar years 2023 and 2022.

Eligibility

All of the Plan's employees became participants in accordance with a negotiated Memorandum of Understanding ("MOU") as negotiated by each group or bargaining unit. In order to receive benefits, eligible employees must meet the minimum requirements defined in their MOU. At June 30, 2022, measurement date, the following numbers of participants were covered by the benefit terms:

Note 8 – Net Other Postemployment Benefits Liability ("OPEB") (Continued)

General Information about the OPEB Plan (Continued)

Eligibility (Continued)

Inactive plan members or beneficiaries currently receiving benefit payments	43
Active employees	101
Total	144

Contributions

As the plan sponsor, the City determines the contributions needed to fund the OPEB Plan. The City pays the liability on a pay-as-you-go basis. The City participates in the California Employers' Retiree Benefit Trust (CERBT) in accordance with GASB 75, which provides a means to fund the annual OPEB costs.

Net OPEB Liability

The GTrans net OPEB liabilities were measured as of June 30, 2022, and total liabilities used to calculate the net OPEB liabilities were determined by actuarial valuation as of June 30, 2022.

Significant Actuarial Assumptions Used for Total OPEB Liability

The net OPEB liability, measured as of June 30, 2022 was determined using the following actuarial assumptions:

Actuarial Cost Method	Entry Age, Level Percent of Pay
Actuarial of Fiduciary Net Position	Fair value of assets
Recognition of deferred inflows and outflows of resources	Closed period equal to the average of the expected remaining service lives of all employees provided with OPEB
Salary Increases	2.75%
Inflation Rate	2.50%
Investment Rate of Return	6.25%, net of OPEB plan investment expense
Healthcare Cost Trend Rate (City Plan)	6.50% for 2022, 6.00% for 2023, 5.50% for 2024, 5.25% for 2025-2029, 5.00% for 2030-2039, 4.75% for 2040-2049, 4.50% for 2050-2069 and 4.00% for 2070 and later years. Medicare ages: 6.00% for 2022, 5.50 precent for 2023, 5.00% for 2024, 4.50% for 2025-2029, 4.25% for 2030-20269, and 4.00% for 2070 and later years.
Healthcare Cost Trend Rate (Kaiser)	6.50% for 2022, 6.00% for 2023, 5.50% for 2024, 5.25% for 2025-2029, 5.00% for 2030-2039, 4.75% for 2040-2049, 4.50% for 2050-2069 and 4.00% for 2070 and later years. Medicare ages: 4.50% for 2022-2029 and 4.00% for 2030 and later years.
Preretirement Mortality	Preretirement Mortality Rates for Public Agency Miscellaneous from CalPERS Experience Study (2000-2019).
Postretirement Mortality	Post-retirement Mortality Rates for Public Agency Miscellaneous from CalPERS Experience Study (2000-2019).

Note 8 – Net Other Postemployment Benefits Liability ("OPEB") (Continued)

Net OPEB Liability (Continued)

Long-Term Expected Rate of Return

The long-term expected rate of return on OPEB plan investments was determined using a building-block method in which expected future real rates of return (expected returns, net of investment expense and inflation) are developed for each major asset class. The calculated investment rate of return was set equal to the expected ten-year compound (geometric) real return plus inflation (rounded to the nearest 25 basis points, where appropriate). The table below provides the long-term expected real rates of return by asset class (based on published capital market assumptions).

Asset Class	Assumed Asset Allocation	Real Rate of Return
Global ex-U.S. Equity	59.00%	4.80%
Fixed Income	25.00%	1.80%
TIPS	5.00%	1.60%
Real Estate	8.00%	3.70%
Commodities	3.00%	1.90%
	100.00%	

Discount Rate

GASB 75 requires a discount rate that reflects the following: a) The long-term expected rate of return on OPEB plan investments – to the extent that the OPEB plan's fiduciary net position (if any) is projected to be enough to make projected benefit payments and assets are expected to be invested using a strategy to achieve that return. b) A yield or index rate for 20-year, tax-exempt general obligation municipal bonds with an average rating of AA/Aa or higher – to the extent that the conditions in (a) are not met.

To determine a resulting single (blended) rate, the amount of the plan's projected fiduciary net position (if any) and the amount of projected benefit payments is compared in each period of projected benefit payments. The discount rate used to measure the GTrans's total OPEB liability is based on these requirements and the following information:

Long-Term Expected Return of Plan Investments	Fidelity GO AA 20 Years Municipal Index	Discount Rate
6.25%	3.54%	6.25%

Note 8 – Net Other Postemployment Benefits Liability ("OPEB") (Continued)

Net OPEB Liability (Continued)

Change in Net OPEB Liability

The following tables show the GTrans' Change in Net OPEB Liability over the measurement period ended June 30, 2022.

	2023 Increase (Decrease)		
	Total OPEB Liability (a)	Plan Fiduciary Net Position (b)	Net OPEB Liability (c) = (a) - (b)
Balance at June 30, 2021	$ 11,625,436	$ 5,713,012	$ 5,912,424
Changes recognized for the measurement period:			
Service Cost	300,182	-	300,182
Interest on the total OPEB liability	718,462	-	718,462
Difference between expected and actual experience	1,378,033	-	1,378,033
Changes of assumptions	(475,092)	-	(475,092)
Contributions - employer	-	873,696	(873,696)
Net investment income	-	(764,412)	764,412
Benefits payment	(873,696)	(873,696)	-
Administrative expenses	-	(1,447)	1,447
Net changes during July 1, 2021 to June 30, 2022	1,047,889	(765,859)	1,813,748
Balance at June 30, 2022 (Measurement Date)	$ 12,673,325	$ 4,947,153	$ 7,726,172

[1]Amount includes any implicit subsidy associated with benefits paid.

Sensitivity of the net OPEB Liability to Changes in the Discount Rate

The following tables present the total OPEB liability of the GTrans, as well as what the GTrans' total OPEB liability would be if it were calculated using a discount rate that is 1-percentage-point lower (5.25 percent) or 1-percentage-point higher (7.25 percent) than the current discount rate.

	Plan's Net OPEB Liability		
Measurement Date	Discount Rate - 1% (5.25%)	Current Discount Rate (6.25%)	Discount Rate + 1% (7.25%)
June 30, 2022	$ 9,418,573	$ 7,726,172	$ 6,324,936

Sensitivity of the Total OPEB Liability to Changes in the Health Care Cost Trend Rates

The following tables present the total OPEB liability of the GTrans, as well as what the GTrans' total OPEB liability would be if it were calculated using healthcare cost trend rates that are 1-percentage-point lower or 1-percentage-point higher than the current healthcare cost trend rates for measurement dates June 30, 2022.

	Plan's Net OPEB Liability		
Measurement Date	1% Decrease	Current Trend	1% Increase
June 30, 2022	$ 6,123,471	$ 7,726,172	$ 9,712,583

Note 8 – Net Other Postemployment Benefits Liability ("OPEB") (Continued)

OPEB Expense and Deferred Outflows of Resources and Deferred Inflows of Resources Related to OPEB

For the measurement period ended June 30, 2022, the GTrans recognized OPEB expenses of $811,910. At June 30, 2023, the GTrans reported deferred outflows of resources and deferred inflows of resources related to OPEB from the following sources:

	2023	
	Deferred outflows of resources	Deferred inflows of resources
Difference between expected and actual experience	$ 1,325,250	$ (185,400)
Changes of assumptions	73,830	(554,016)
Net difference between projected and actual earnings on plan investments	386,621	-
Employer contributions made subsequent to the measurement date	724,778	-
Total	$ 2,510,479	$ (739,416)

$724,778 reported as deferred outflows of resources related to OPEB resulting from the GTrans' portion of the City's contributions subsequent to the measurement date are recognized as a reduction of the net OPEB liability in the year ending June 30, 2024. Other amounts reported as deferred outflows and deferred inflows of resources related to other postemployment benefits will be recognized in the future other postemployment benefits expense as follows:

Deferred Outflows/ (Inflows) of Resources	
Year Ending June 30	2023
2023	$ 147,837
2024	143,094
2025	115,226
2026	311,828
2027	294,691
Thereafter	33,609
Total	$ 1,046,285

Note 9 – Capital Contributions

The following represents the different sources of capital contributions for the year ended June 30, 2023:

Proposition 1B - Security Bridge	$ 7,015
Municipal Operator Service Improvement Program ("MOSIP")	877,150
Federal Transit Assistance Funds	1,281,673
State Transit Assistance	27,804
The Los Angeles County Metropolitan Transportation Authority:	
Information Technology Systems	586,877
Bus Signal	154,328
Solar Project	811
Mobile Source Air Pollution Reduction Review Committee ("MSRC")	
Natural Gas Infrastructure Program	251,178
Low Carbon Transit Program	84
Total	$ 3,186,920

Note 10 – Related Party Transactions

Certain general and administrative costs are allocated to the GTrans by the City based upon an approved cost allocation plan. Such allocated costs were $2,305,675 was included as other operating expenses in the accompanying statement of revenues, expenses, and changes in net position for the year ended June 30, 2023.

Due to the City in the amount of $7,093,382 reported in the accompanying statement of net position was resulted from the short-term cash borrowing.

Note 11 – Net Investment In Capital Assets

The following is the calculation of net investment in capital assets at June 30, 2023.

	2023
Capital assets, net of accumulated depreciation and amortization	$ 59,036,668
Less: capital assets related accounts payable	(828,673)
Less: lease payable	(228,584)
Less: subscription payable	(13,353)
Total	$ 57,966,058

Note 12 – Commitments & Contingencies

A. Lawsuits

The GTrans is presently involved in certain matters of litigation that have arisen in the normal course of conducting the GTrans' business. Management believes, based upon consultation with attorneys that these cases, in the aggregate, are not expected to result in a material adverse financial impact on the GTrans. Additionally, the GTrans' management believes that the GTrans' insurance programs are sufficient to cover any potential losses should an unfavorable outcome materialize.

Note 12 – Commitments & Contingencies (Continued)

B. Federal and State Grant Programs

The City participates in Federal and State grant programs for GTrans, the principal of which are subject to program compliance audits pursuant to the Single Audit Act as amended and applicable State requirements. Accordingly, the City's compliance with applicable grant requirements will be established at a future date. The amount of expenditures which may be disallowed by the granting agencies cannot be determined at this time, although GTrans management anticipates such amounts, if any, will be immaterial.

REQUIRED SUPPLEMENTARY INFORMATION (UNAUDITED)

The GTrans Enterprise Fund of the City of Gardena
Required Supplementary Information (Unaudited)
Schedule of the GTrans' Proportionate Share of the Net Pension Liability
For the Year Ended June 30, 2023

Last Ten Fiscal Years[1]

California Public Employees' Retirement System ("CalPERS") - GTrans

Measurement Date	June 30,2022	June 30,2021	June 30, 2020	June 30, 2019	June 30, 2018
GTrans Proportion of the Net Pension Liability	45.36080%	46.70000%	46.70000%	47.80000%	46.05480%
GTrans's Proportionate Share of the Net Pension Liability (Asset)	$ 3,046,867	$ (10,155,145)	$ 22,722,142	$ 20,652,115	$ 17,636,461
GTrans's Covered Payroll	$ 9,856,478	$ 8,986,120	$ 10,165,752	$ 9,725,277	$ 9,297,404
GTrans's Proportionate Share of the Net Pension Liability (Asset) as a Percentage of Its Covered Payroll	30.91%	-113.01%	223.52%	212.36%	189.69%
GTrans's Proportionate Share of the Fiduciary Net Position as a Percentage of the Total Pension Liability	96.44%	111.89%	73.56%	74.28%	76.06%

[1] Historical information is presented only for measurement periods after GASB 68 implementation in 2013-14.

Notes to Schedule:

Change in Benefit Terms: There were no changes in benefit terms.

Changes of Assumptions: In 2022, the accounting discount rate was reduced from 7.15% to 6.90%. In determining the long-term expected rate of return, CalPERS took into account long-term market return expectations as well as the expected pension fund cash flows. Projected returns for all asset classes are estimated, combined with risk estimates, and are used to project compound (geometric) returns over the long term. The discount rate used to discount liabilities was informed by the long-term projected portfolio return. In addition, demographic assumptions and the inflation rate assumption were changed in accordance with the 2021 CalPERS Experience Study and Review of Actuarial Assumptions. In 2021, 2020 and 2019, there were no changes. In 2018, demographic assumptions and inflation rate were changed in accordance to the CalPERS Experience Study and Review of Actuarial Assumptions December 2017. There were no changes in the discount rate. In 2017, the discount rate was reduced from 7.65 percent to 7.15 percent. In 2016, there were no changes. In 2015, amounts reported reflect an adjustment of the discount rate from 7.5 percent (net of administrative expense) to 7.65 percent (without a reduction for pension plan administrative expense.) In 2014, amounts reported were based on the 7.5 percent discount rate.

The GTrans Enterprise Fund of the City of Gardena
Required Supplementary Information (Unaudited)
Schedule of the GTrans' Proportionate Share of the Net Pension Liability (Continued)
For the Year Ended June 30, 2023

Last Ten Fiscal Years

California Public Employees' Retirement System ("CalPERS") - Gtrans (Continued)

Measurement Date	June 30, 2017	June 30, 2016	June 30, 2015	June 30, 2014[1]
GTrans Proportion of the Net Pension Liability	44.79196%	50.31818%	50.31818%	50.31818%
GTrans's Proportionate Share of the Net Pension Liability	$ 19,931,911	$ 16,916,479	$ 12,394,309	$ 12,288,210
GTrans's Covered Payroll	$ 8,881,850	$ 8,766,851	$ 9,049,080	$ 8,756,618
GTrans's Proportionate Share of the Net Pension Liability (Asset) as a Percentage of Its Covered Payroll	224.41%	192.96%	136.97%	140.33%
GTrans's Proportionate Share of the Fiduciary Net Position as a Percentage of the Total Pension Liability	75.13%	76.80%	82.27%	84.97%

The GTrans Enterprise Fund of the City of Gardena
Required Supplementary Information (Unaudited)
Schedule of Contributions - Pensions
For the Year Ended June 30, 2023

Last Ten Fiscal Years

California Public Employees' Retirement System ("CalPERS") - GTrans

Fiscal Year	2022-23	2021-2022	2020-21	2019-18	2018-19
Actuarially determined contribution	$ 877,731	$ 981,092	$ 2,102,021	$ 1,993,187	$ 1,651,631
Contributions in relation to the actuarially determined contribution	(877,731)	(981,092)	(22,470,696)	(1,993,187)	(1,651,631)
Contribution deficiency (excess)	$ -	$ -	$ (20,368,675)	$ -	$ -
Covered Payroll[1]	$ 10,241,478	$ 9,856,478	$ 8,986,120	$ 10,165,752	$ 9,725,277
Contributions as a percentage of covered payroll[2]	8.57%	9.95%	250.06%	19.61%	16.98%

[1] Covered payroll represented above is based on pensionable earnings.

Notes to Schedule:

Benefit Changes: There were no changes in benefit terms.

Changes of Assumptions: In 2022, the accounting discount rate was reduced from 7.15% to 6.90%. In determining the long-term expected rate of return, CalPERS took into account long-term market return expectations as well as the expected pension fund cash flows. Projected returns for all asset classes are estimated, combined with risk estimates, and are used to project compound (geometric) returns over the long term. The discount rate used to discount liabilities was informed by the long-term projected portfolio return. In addition, demographic assumptions and the inflation rate assumption were changed in accordance with the 2021 CalPERS Experience Study and Review of Actuarial Assumptions. In 2021, 2020 and 2019, there were no changes. In 2018, demographic assumptions and inflation rate were changed in accordance to the CalPERS Experience Study and Review of Actuarial Assumptions December 2017. There were no changes in the discount rate. In 2017, the discount rate was reduced from 7.65 percent to 7.15 percent. In 2016, there were no changes. In 2015, amounts reported reflect an adjustment of the discount rate from 7.5 percent (net of administrative expense) to 7.65 percent (without a reduction for pension plan administrative expense.) In 2014, amounts reported were based on the 7.5 percent discount rate.

The GTrans Enterprise Fund of the City of Gardena
Required Supplementary Information (Unaudited)
Schedule of Contributions - Pensions (Continued)
For the Year Ended June 30, 2023

Last Ten Fiscal Years

California Public Employees' Retirement System ("CalPERS") - Gtrans (Continued)

Fiscal Year	2017-18	2016-17	2015-16	2014-15	2013-14
Actuarially determined contribution	$ 1,517,116	$ 1,329,405	$ 1,163,588	$ 1,014,203	$ 819,390
Contributions in relation to the actuarially determined contribution	(1,517,116)	(1,329,405)	(1,163,588)	(1,014,203)	(819,390)
Contribution deficiency (excess)	$ -	$ -	$ -	$ -	$ -
Covered Payroll	$ 9,297,404	$ 8,881,850	$ 8,766,851	$ 9,049,080	$ 8,756,818
Contributions as a percentage of covered payroll	16.32%	14.97%	13.27%	11.21%	9.36%

The GTrans Enterprise Fund of the City of Gardena
Required Supplementary Information (Unaudited)
Schedule of Changes in Net OPEB Liability and Related Ratios
For the Year Ended June 30, 2023

Last Ten Fiscal Years

GTrans Retiree Healthcare Plan

Measurement period	2021-2022[1]	2020-2021	2019-2020	2018-19	2017-18
Total OPEB liability					
Service cost	$ 300,182	$ 340,578	$ 299,863	$ 291,129	$ 238,960
Interest	718,462	691,860	706,976	661,199	629,344
Changes of benefit terms		-	-	-	-
Changes of assumptions	(475,092)	-	117,261	-	(357,602)
Differences between expected and actual experience	1,378,033	-	(294,459)	-	301,185
Benefit payments, including refunds	(873,696)	(272,358)	(276,271)	(289,528)	(494,701)
Other - funding rates used by benefits paid		-	-	-	-
Net change in total OPEB liability	1,047,889	760,080	553,370	662,800	317,186
Total OPEB liability - beginning of year	11,625,436	10,865,356	10,311,986	9,649,186	9,332,000
Total OPEB liability - end of year (a)	$ 12,673,325	$ 11,625,436	$ 10,865,356	$ 10,311,986	$ 9,649,186
OPEB fiduciary net position					
Contributions - employer	$ 873,696	$ 272,358	$ 276,271	$ 289,528	$ 4,516,245
Contributions - employee		-	-	-	-
Net investment income	(764,412)	1,231,806	152,987	251,747	60,118
Benefit payments, including refunds	(873,696)	(272,358)	(276,271)	(289,528)	(494,701)
Administrative expense	(1,447)	(1,696)	(2,115)	(874)	(505)
Other changes	-	-	-	-	-
Net change in plan fiduciary net position	(765,859)	1,230,110	150,872	250,873	4,081,157
Plan fiduciary net position - beginning of year	5,713,012	4,482,902	4,332,030	4,081,157	-
Plan fiduciary net position - end of year (b)	$ 4,947,153	$ 5,713,012	$ 4,482,902	$ 4,332,030	$ 4,081,157
Plan net OPEB liability - end of year (a) - (b)	$ 7,726,172	$ 5,912,424	$ 6,382,454	$ 5,979,956	$ 5,568,029
Plan fiduciary net position as a percentage of the total OPEB liability	39.04%	49.14%	41.26%	42.01%	42.30%
Covered employee payroll	$ 10,652,412	$ 8,791,518	$ 10,811,701	$ 9,798,690	$ 10,316,000
Plan net OPEB liability as a percentage of covered employee payroll	72.53%	67.25%	59.03%	61.03%	53.97%

[1]Historical information is presented only for measurement periods after GASB 75 implementation in 2016-17.

Notes to Schedule:

Changes of assumptions: In 2022, there were no changes in discount rate; however, the demographic assumptions and the inflation rate assumption were changed in accordance with the 2002-2019 CalPERS Experience Study and Review of Actuarial Assumptions . In 2020, the discount rate changed from 6.75 percent to 6.25 percent and the inflation assumption was changed from 2.75 percent per year to 2.50 percent. In 2019, There were no changes in assumptions. In 2018, medical plan at retirement assumption updated, trend rate updated, demographic assumptions were updated to CalPERS 1997-2015 Experience Study, and mortality improvement scale was updated to Scale MP-2018. In 2017, there were no changes.

Changes of benefit terms: There were no changes of benefit terms in 2022.

The GTrans Enterprise Fund of the City of Gardena
Required Supplementary Information (Unaudited)
Schedule of Changes in Net OPEB Liability and Related Ratios (Continued)
For the Year Ended June 30, 2023

Last Ten Fiscal Years

GTrans Retiree Healthcare Plan (Continued)

Measurement period	2016-17
Total OPEB liability	
Service cost	$ 232,000
Interest	598,000
Changes of benefit terms	-
Changes of assumptions	-
Differences between expected and actual experience	-
Benefit payments, including refunds	(462,000)
Other - funding rates used by benefits paid	190,000
Net change in total OPEB liability	558,000
Total OPEB liability - beginning of year	8,774,000
Total OPEB liability - end of year (a)	$ 9,332,000
OPEB fiduciary net position	
Contributions - employer	$ 462,000
Contributions - employee	-
Net investment income	-
Benefit payments, including refunds	(462,000)
Administrative expense	-
Other changes	-
Net change in plan fiduciary net position	-
Plan fiduciary net position - beginning of year	-
Plan fiduciary net position - end of year (b)	$ -
Plan net OPEB liability - end of year (a) - (b)	$ 9,332,000
Plan fiduciary net position as a percentage of the total OPEB liability	0.00%
Covered employee payroll	$ 9,759,000
Plan net OPEB liability as a percentage of covered employee payroll	95.62%

The GTrans Enterprise Fund of the City of Gardena
Required Supplementary Information (Unaudited)
Schedule of Contributions - Other Postemployment Benefits
For the Year Ended June 30, 2023

Last Ten Fiscal Years

GTrans Retiree Healthcare Plan

Fiscal Year	2022-23[1]	2021-22	2020-21	2019-20	2018-19
Actuarially determined contribution	$ 957,996	$ 899,000	$ 848,000	$ 776,000	$ 721,000
Contributions in relation to the actuarially determined contribution	(724,778)	(873,696)	(272,358)	(276,271)	(532,056)
Contribution deficiency (excess)	$ 233,218	$ 25,304	$ 575,642	$ 499,729	$ 188,944
Covered payroll	$ 10,945,353	$ 10,494,293	$ 8,791,518	$ 10,811,701	$ 9,798,690
Contributions as a percentage of covered payroll	6.62%	8.33%	3.10%	2.56%	5.43%

[1] Historical information is presented only for measurement periods after GASB 75 implementation in 2016-17.

Notes to Schedule:

The actuarial methods and assumptions used to set the actuarially determined contributions for Fiscal Year 2022-23 were derived from the June 30,

Methods and assumptions used to determine contribution rates:

Actuarial cost method	Entry Age Normal, Level % of pay
Discount Rate:	
Long-term Expected Return	6.25%
Municipal Bond Index	3.54%
GASB 75	6.25%
Salary Increases:	2.75%
Withdrawal:	Terminated Refund and Terminated Vested Rates for Public Agency Miscellaneous from CalPERS Experience Study (2000-2019)
Pre-retirement Mortality:	Preretirement Mortality Rates for Public Agency Miscellaneous from CalPERS Experience Study (2000-2019).
Postretirement Mortality:	Post-retirement Mortality Rates for Public Agency Miscellaneous from CalPERS Experience Study (2000-2019).
Retirement:	
Miscellaneous – Classic	Service Retirement Rates for Public Agency Miscellaneous—2.00% at 55—from CalPERS Experience Study (2000-2019).
Miscellaneous – PEPRA	Service Retirement Rates for Public Agency Miscellaneous—2.00% at 62—from CalPERS Experience Study (2000-2019).
Medical Trend:	Pre-Medicare - 6.5% for 2022, decreasing on an ultimate rate of 4.00% in 2070+ Medicare City Plan - 6.0% for 2022, decreasing on an ultimate rate of 4.00% in 2070+
Preretirement Mortality	Preretirement Mortality Rates for Public Agency Miscellaneous from CalPERS Experience Study (2000-2019).
Postretirement Mortality	Post-retirement Mortality Rates for Public Agency Miscellaneous from CalPERS Experience Study (2000-2019).

The GTrans Enterprise Fund of the City of Gardena
Required Supplementary Information (Unaudited)
Schedule of Contributions - Other Postemployment Benefits (Continued)
For the Year Ended June 30, 2023

Last Ten Fiscal Years

GTrans Retiree Healthcare Plan (Continued)

Fiscal Year	2017-18	2016-17
Actuarially determined contribution	$ 785,000	$ 848,000
Contributions in relation to the actuarially determined contribution	(4,516,544)	(462,000)
Contribution deficiency (excess)	$ (3,731,544)	$ 386,000
Covered payroll	$ 10,316,000	$ 9,759,000
Contributions as a percentage of covered payroll	43.78%	4.73%

This page intentionally left blank.

SUPPLEMENTARY INFORMATION

This page intentionally left blank.

The GTrans Enterprise Fund of the City of Gardena
Supplementary Information
For the Year Ended June 30, 2023

Schedule of Farebox Recovery Ratio Calculation

The GTrans is subject to the provisions of TDA Section 99268.3 and must maintain a minimum fare ratio of 20%.

For the year ended June 30, 2023, the GTrans' Farebox recovery ratios of operating revenues to operating expenses were as follows:

Operating revenues:	
Bus operation related passenger fares	$ 1,303,375
Local support:	
Proposition A - Local Return	1,738,572
Service charges for maintenance of City's vehicles	126,179
Measure R Local Return	933,379
Measure M Local Return	1,889,268
Proposition C - MOSIP	184,390
Other revenues	34,737
Total operating revenues	$ 6,209,901
Operating expenses	$27,984,291
Less: Depreciation/amortization expense	(3,504,186)
Total operating expenses, excluding depreciation/amortization	$24,480,105
Farebox recovery ratio	25%

Schedules of Proceeds Received and Expended

Measure R

Unexpended proceeds at beginning of the year	$ 3,206,268
Proceeds received/expended:	
Measure R Allocation	2,863,918
Interest income	96,392
Expense incurred	(1,029,772)
Unexpended proceeds at end of the Year	$ 5,136,806

City of Gardena

Gardena City Council Meeting

AGENDA REPORT SUMMARY

Agenda Item No. 12.C
Section: DEPARTMENTAL ITEMS - ADMINISTRATIVE SERVICES
Meeting Date: December 12, 2023

TO: THE HONORABLE MAYOR AND MEMBERS OF THE GARDENA CITY COUNCIL

AGENDA TITLE: Approve contracts with AT&T Business and AT&T Corp (AT&T Consulting) for the purchase of Voice Over Internet Protocol (VOIP) services and AT&T Consulting Services for an estimated total of $30,213 for the period January 1, 2024 through June 30, 2025

COUNCIL ACTION REQUIRED:

S**taff Recommendation: Approve Purchase and Contract**

RECOMMENDATION AND STAFF SUMMARY:

At the October 24, 2023 City Council Meeting, the City Council authorized the City Manager to execute the authorization to order forms for cellular and data services, enabling the City of Gardena to participate in the State of California Network and Telecommunications (CALNET) program through June 30, 2025. The City conducted various meetings with AT&T, to analyze our existing phone infrastructure and setup, to see how the City could utilize new technology and the CALNET program to save City funds.

The City determined, with the assistance of a professional consultant with AT&T, it could revitalize its current phone infrastructure and replace this with a fully operating VOIP system. In doing these changes the City would save an estimated $486,000 for the 18 month period from January 1, 2024 through June 30, 2025.

Therefore staff recommends, that the City Council approve the purchase of VOIP services and AT&T Consulting Services for an estimated total of $30,213 for the period January 1, 2024 through June 30, 2025, to save an estimated $486,000 compared to our current rates.

FINANCIAL IMPACT/COST:

Fund Type	**FY 2023-2024**	**FY 2023-2024**	**Total**
General Fund	$16,190	$12,381	$28,571
GTrans Fund	$547	$1,095	$1,642
Total	$16,737	$13,476	$30,213

ATTACHMENTS:

12-12-23-City of Gardena IP Flex proposal.pdf
12-12-23-AT& T Consulting Proposal.pdf

APPROVED:



_____
Clint Osorio, City Manager

Proposal for a VOIP solution

Presented to City of Gardena

Alexander Pinto
1700 W 162nd St
GARDENA, CA 90247
APinto@cityofgardena.org
Office: 310.217.9500

by AT&T

Sean Simpson, CLIENT SOLUTIONS EXECUTIVE
3580 ORANGE ST, N/A
RIVERSIDE, CA 92501, United States
sean.e.simpson@att.com
Office: +1 714.651.9665 Cell: +1 714.651.9665

Solution

We've assessed your information and developed a VOIP solution that addresses your business needs. The solution includes the following components:

- **IP Flexible Reach** is a managed Voice over IP (VoIP) solution that provides inbound and outbound calling on your data network, giving you long distance and international calling for all your sites globally and local calling for your U.S. and Most of World (MoW) sites. IP Flexible Reach adds VoIP calling capabilities to your data network.

December 06, 2023

Copyright Notice and Statement of Confidentiality—© 2023 AT&T Intellectual Property. AT&T and globe logo are registered trademarks and service marks of AT&T Intellectual Property and/or AT&T affiliated companies. All other marks are the property of their respective owners. The contents of the Proposal (except for pricing applicable to E-Rate funded services) are unpublished, proprietary, and confidential and may not be copied, disclosed, or used, in whole or in part, without the express written permission of AT&T Intellectual Property or affiliated companies, except to the extent required by law and insofar as is reasonably necessary in order to review and evaluate the information contained herein.

IP Flexible Reach Enhanced Features Package—The Enhanced Features Package option can help you boost employee productivity, enhance disaster recovery, optimize your network, and maximize the experience of your customers.

Management Options

A web-based Customer Portal is available for feature self-management and reporting

- Max DID Policing
- Anonymous Call Rejection
- Account Codes
- Authorization Codes
- Sequential Ringing
- Simultaneous Ringing

Appearance Option

- Configurable Calling Line ID

Authorization/Restriction Options

- Operator Assistance / Directory Assistance
- Domestic
- International
- Toll-Free

Call Forwarding Options

Set by user with Feature Access Codes (FAC) or through the Portal

- Call Forwarding Always
- Call Forwarding Selective
- Call Forwarding Busy
- Call Forwarding Not reachable
- Call Forwarding No Answer

Call Transfer Options

Controlled from customer IP-PBX

- Call Transfer Blind (SIP REFER)
- Call Transfer Consult (SIP REFER)

© 2023 AT&T Intellectual Property—AT&T Proprietary—Not for use or disclosure outside of AT&T companies and its third-party representatives except under written agreement.

IP Flexible Reach for TDM and IP PBXs—This diagram shows a typical IP Flexible Reach configuration for TDM and IP PBXs.

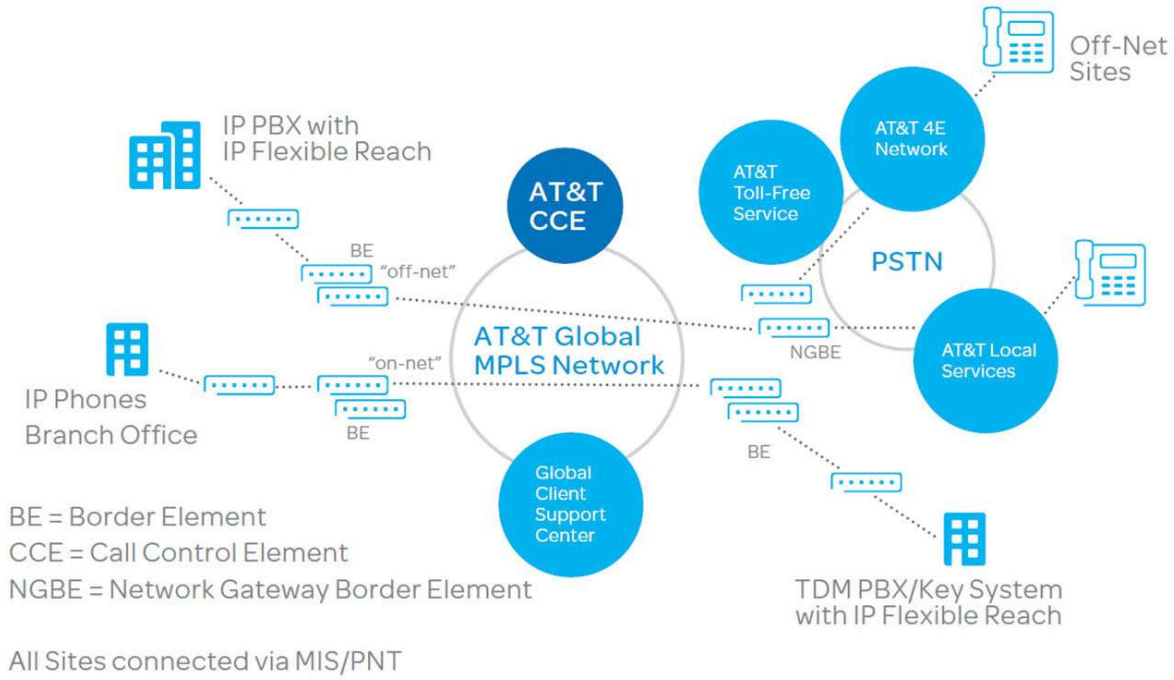

© 2023 AT&T Intellectual Property—AT&T Proprietary—Not for use or disclosure outside of AT&T companies and its third-party representatives except under written agreement.

Pricing (CALNET NextGen Month to Month)

The VOIP solution includes the following components and pricing (note: NRC = non-recurring charge and MRC = monthly recurring charge):

Main Circuit 1700 W 162nd St
10mbps At&t Dedicated Internet MRC $446.44 NRC $0.00

23 Concurrent Call Paths Calling Plan A MRC $165.02 NRC $0.00

Failover Circuit 13999 S Western Ave

10mbps At&t Dedicated Internet MRC $446.44 NRC $0.00

23 Concurrent Call Paths Calling Plan A MRC $165.02 NRC $0.00 Total Monthly $1,122.92

Total Monthly $1,122.92

© 2023 AT&T Intellectual Property—AT&T Proprietary—Not for use or disclosure outside of AT&T companies and its third-party representatives except under written agreement.

AT&T Advantages

AT&T gives you the following advantages:

- **#1 in Customer Satisfaction**—AT&T is tops in customer satisfaction for business wireline service delivered to large enterprise customers for the fifth straight year in the J.D. Power Business Wireline Satisfaction study.[1]
- **Global Business Communications Leader**—Nearly 2.5 million businesses, from small businesses to the largest global companies, turn to AT&T. This includes approximately 2,000 of the largest multinational customers (MNCs) that do business on more than two continents and have significant networking requirements in the U.S.
- **Investing in Our Network**—AT&T is consistently one of the top annual investors of capital in the U.S. Over the past five years (2018-2022), we invested more than $140 billion in our wireless and wireline networks, including capital investments and acquisition of wireless spectrum.

You've seen from our proposal that we understand your objectives and have the expertise and resources to support them. We look forward to working with you to implement the VOIP solution and help you achieve your business goals.

Important Information

IP Flexible Reach is provided by AT&T Corp.
Proposal Validity Period—The information and pricing contained in this proposal is valid for a period of 30 days from the date written on the proposal cover page unless rescinded or extended in writing by AT&T.
Terms and Conditions—This Proposal is conditioned upon negotiation of mutually acceptable terms and conditions.
Proposal Pricing—Pricing proposed herein is based upon the specific product/service mix and locations outlined in this Proposal. Any changes or variations in the proposed terms and conditions, the products/services/quantities, length of term, locations, and/or design described herein may result in different pricing. Prices quoted do not include applicable taxes, surcharges, or fees. In accordance with the tariffs or other applicable service agreement terms, Customer is responsible for payment of such charges.
Providers of Service—Subsidiaries and affiliates of AT&T Inc. provide products and services under the AT&T brand. Either AT&T Corp. or AT&T Mobility National Accounts LLC is the proposer for itself and on behalf of its service-providing affiliates.
Software—Any software used with the products and services provided in connection with this Proposal will be governed by the written terms and conditions applicable to such software. Title to software remains with AT&T or its supplier. Customer must comply with all such terms and conditions, and they will take precedence over any agreement between the parties as relates to such software.
Copyright Notice and Statement of Confidentiality—© 2023 AT&T Intellectual Property. AT&T and globe logo are registered trademarks and service marks of AT&T Intellectual Property and/or AT&T affiliated companies. All other marks are the property of their respective owners. The contents of the Proposal (except for pricing applicable to E-Rate funded services) are unpublished, proprietary, and confidential and may not be copied, disclosed, or

[1] AT&T received the highest score among large enterprises in the J.D. Power 2018-2022 U.S. Business Wireline Satisfaction Studies of customers' satisfaction with their business wireline data and voice service provider. Visit jdpower.com/awards for more details.

© 2023 AT&T Intellectual Property—AT&T Proprietary—Not for use or disclosure outside of AT&T companies and its third-party representatives except under written agreement.

used, in whole or in part, without the express written permission of AT&T Intellectual Property or affiliated companies, except to the extent required by law and insofar as is reasonably necessary in order to review and evaluate the information contained herein.

© 2023 AT&T Intellectual Property—AT&T Proprietary—Not for use or disclosure outside of AT&T companies and its third-party representatives except under written agreement.

Signature Page

Vendor:	**AT&T Corp. ("AT&T Consulting")**
Customer:	**City of Gardena**
Engagement Number:	**2739-02-4D60**
Engagement Name:	**SIP Transformation**
AT&T Contract Number:	**20190515-9399**
Date of Submission:	**December 5, 2023**
Primary Work Site:	**Remote & Gardena, CA**

AT&T Corp. provides services under the brand AT&T Consulting.

This Statement of Work (SOW) constitutes an offer by AT&T Consulting to perform the services described herein. This offer may, at AT&T Consulting's option, be withdrawn if not signed and returned by City of Gardena within 15 days from the date of submission shown above.

This SOW is an attachment to the Agreement 20190515-9399 and is hereby incorporated into said Agreement. This SOW may only be modified by a written Change Order executed by the parties hereto.

IN WITNESS WHEREOF, the parties hereto have caused this SOW to be duly executed. Each party warrants and represents that its respective signatories whose signatures appear below have been and are on the date of signature duly authorized to execute this SOW.

AUTHORIZED SIGNATURE
City of Gardena

Signature

Name Printed

Title

Date

ACCEPTANCE SIGNATURE
AT&T Corp.

Signature

Name Printed

Title

Date

FOR AT&T Consulting INTERNAL USE ONLY _____ _____
ATTUID Initials

Confidential Information: This agreement is for use by authorized employees of the Parties hereto only and is not for general distribution within or outside their companies.
© 2023 AT&T Intellectual Property. All rights reserved. AT&T and the AT&T logo are trademarks of AT&T Intellectual Property.

Table of Contents

1. Introduction 3
2. Description of Work 3
3. Deliverables 3
4. Approach 4
5. Project Dependencies 4
6. Assumptions 5
7. Completion Criteria 6
8. Customer Responsibilities 6
9. Communications Plan 8
   a) Kickoff Meeting 8
   b) Project Schedule 8
   c) Status Reports 8
   d) Status Meetings 8
10. Escalation Process 9
   a) AT&T Consulting Escalation Path 9
   b) City of Gardena Escalation Path 9
11. Initiation of Work 9
12. Timeline 9
13. Charges, Expenses and Invoicing 10
14. Change Order Process 11
15. Engagement Contacts 12

Confidential Information: This agreement is for use by authorized employees of the Parties hereto only and is not for general distribution within or outside their companies.
© 2023 AT&T Intellectual Property. All rights reserved. AT&T and the AT&T logo are trademarks of AT&T Intellectual Property.

1. Introduction

AT&T Consulting is pleased to provide this Scope of Work (SoW) to the City of Gardena (CoG) to address specific initiatives related to their existing premise-based Cisco Unified Communications infrastructure.

2. Description of Work

AT&T Consulting will implement IP Flexible Reach (SIP trunks) to replace the existing ISDN PRI service for access to the PSTN. Migration to SIP is done in stages and requires the use of a Session Border Controller (SBC). An SBC must be used to terminate carrier provisioned SIP trunks for voice traffic. The installation of an SBC is important as it provides a demarcation point between the carrier and the City's network. It also provides added security by preventing the carrier from terminating SIP trunks directly to CoG's UCM cluster. Existing Cisco voice gateways can be used as SBCs. It is assumed that two locations will receive SIP trunks to provide automatic failover capabilities for all CoG locations.

The migration to SIP is a multi-step process. First, AT&T Consulting will configure the existing Cisco voice gateways to terminate AT&T circuits connected to an AT&T managed router. In addition, these voice gateways (routers) will be configured to conform to the requirements established for IP Flex Reach service terminating on Cisco Unified Border Element (CUBE).

AT&T Consulting will make the appropriate additions and modifications to the City of Garden's UCM cluster to allow for inbound and outbound calling over IP Flex Reach. The IP Flex Reach turn up will include test numbers that will be used to validate call routing.

After the turn-up is completed, Trunk Call Routing (TCR) must be configured to ensure automatic failover occurs between both SIP trunks. AT&T Consulting will test both SIP trunks to ensure TCR is in place and failover occurs successfully for both circuits.

Once TCR has been tested successfully, telephone numbers can be ported. The City of Gardena will provide a list of Direct Inward Dial (DID) telephone numbers to port to SIP. AT&T Consulting will be an active participant during the porting process to ensure telephone numbers have been migrated to SIP and to ensure any applicable configuration changes are made to the UCM cluster.

3. Deliverables

The following deliverables are expected outcomes of this engagement:

- Configuration of existing Cisco voice gateways
- Configuration of existing UCM cluster
- Completion of IP Flex turn-up

Confidential Information: This agreement is for use by authorized employees of the Parties hereto only and is not for general distribution within or outside their companies.
© 2023 AT&T Intellectual Property. All rights reserved. AT&T and the AT&T logo are trademarks of AT&T Intellectual Property.

- Trunk Call Routing configuration
- Testing of SIP and Trunk Call Routing
- Support for number porting

4. Approach

AT&T Consulting will sponsor a project kick-off meeting to review this SOW, obtain any information required from City of Gardena but not yet received, and discuss working arrangements not defined in this SOW.

Each party will designate a Single Point of Contact (SPOC) that has the authority to represent such party and has decision-making authority for most matters. All material communications should be conducted through the SPOCs. Such communications should either be in writing or summed up in writing. However, it is recognized that for the sake of efficiency, there will need to be direct communications between AT&T Consulting team members and various City of Gardena employees. Any conversation that may have a material outcome on the success of the engagement will need to be documented and sent to the SPOCs.

A project schedule will be developed and agreed to early in the engagement. This project schedule will highlight key milestones, deliverable dates, responsible parties, and any predecessor activities. The project schedule will be maintained throughout the engagement and progress will be tracked against it.

During the course of this effort, AT&T Consulting will apply its proprietary methodology to leverage its knowledge gained in similar engagements.

AT&T Consulting, in coordination with City of Gardena, will establish a mutually agreeable working schedule and delivery plan as the first phase of this engagement.

5. Project Dependencies

To manage any necessary changes to scope, deliverables, resource availability, or underlying project assumptions, we will use AT&T's standard Change Control Process.

- Timely access to network devices, systems, locations, documentation, and key stakeholders who are vital to the information collection phase of this project
- Scheduling of meetings or receiving timely feedback
- Other than authorized Denial of Service (DoS) attacks, testing activities performed by AT&T Consulting in connection with AT&T Consulting's services are not intended to interfere with or in any way disrupt any activities of City of Gardena before, during, or after the activities. Nevertheless, testing services may cause interruptions in network service.

Confidential Information: This agreement is for use by authorized employees of the Parties hereto only and is not for general distribution within or outside their companies.
© 2023 AT&T Intellectual Property. All rights reserved. AT&T and the AT&T logo are trademarks of AT&T Intellectual Property.

- Appropriate access to customer personnel, vendors, or other entities, or the receipt of current, accurate data, documentation, or systems
- Product vendor(s) are able to remedy hardware or software that fails to perform to specification and be remedied in the timeframe required to meet the engagement schedule.
- Product vendor(s) are able to deliver all necessary hardware and software in a commercially reasonable timeframe.

6. Assumptions

The assumptions below were used by AT&T Consulting to scope this engagement based on information provided to it by City of Gardena. If any of these assumptions prove to be invalid, the parties agree to resolve the situation via the Change Order Process. Notwithstanding the foregoing, neither of the principal parties is bound to use the Change Order Process in the event of a material breach by the other party.

- Unless mutually agreed otherwise between the parties, working hours for this engagement will be City of Gardena's normal workday (Monday to Friday, 8AM to 5PM, excluding holidays), with the exception of any work that would interfere with City of Gardena’s business or operations, such as upgrades to live equipment.
- There will not be any special conditions or restrictions that would affect a productive workday.
- Delays caused by factors outside of the reasonable control of AT&T will be addressed via the Change Order Process.
- Unless otherwise specified in this Statement of Work, Deliverables will be furnished using Microsoft Office products (Word, Excel, PowerPoint, Project, Visio) or in PDF form as appropriate.
- City of Gardena’s other vendors and their personnel will be cooperative and forthcoming with information.
- All items listed in the Customer Responsibilities section of the SOW are met, delivered, or provided (as appropriate) in a timely manner.
- AT&T Consulting estimates that approximately 0-25% of the consultant work required will be performed on site, depending on City of Gardena requirements. Consultants work 40 hours per week during local standard business hours, with travel time allotted during the work week for on-site activities.
- City of Gardena has ordered the necessary circuits by the start of the Detailed Design phase.
- AT&T Consulting implementation activities will cover up to 2 locations.

Confidential Information: This agreement is for use by authorized employees of the Parties hereto only and is not for general distribution within or outside their companies.
© 2023 AT&T Intellectual Property. All rights reserved. AT&T and the AT&T logo are trademarks of AT&T Intellectual Property.

- If required, AT&T Consulting's consultants will have access to systems, hardware, computer rooms, wiring closets, etc. that are necessary to accomplish the deliverables of this engagement.

- AT&T Consulting will not provide, test or be responsible for interoperability between or to systems not identified in this SOW.

- All environmental conditions (e.g., power, air conditioning, rack, and floor space) are either currently available or will be provided by City of Gardena within the agreed upon schedule for this engagement.

- All equipment is in working order, performs appropriately, and is at currently supported software, hardware, and firmware revision levels.

- All communications facilities (e.g., WAN circuits, LAN cabling) between locations that are necessary for this engagement are either currently available or will be provided by City of Gardena within the agreed upon schedule for this engagement.

- All required hardware, firmware, and software that are necessary for this engagement are either currently available or will be provided by City of Gardena within the agreed upon schedule for this engagement.

- All test and system configuration work will be started when all equipment at all sites has been installed.

7. Completion Criteria

This engagement will be deemed completed when the following items have been accomplished:

- All Deliverables specified in this SOW have been submitted to the City of Gardena SPOC.

8. Customer Responsibilities

City of Gardena agrees to provide timely access to all personnel, resources (including all necessary hardware, software, network access, adequate and secure workspace, and telephone access) and requested information that is deemed necessary by AT&T Consulting to ensure that AT&T Consulting can fulfill its commitments stated herein. When possible, AT&T Consulting will make reasonable efforts to provide lead-time to City of Gardena. Typically, this notification will occur at the weekly status meetings. However, it may be necessary from time to time to have a faster response level. In these cases, City of Gardena agrees to respond within 3 business days.

City of Gardena also specifically agrees to:

Confidential Information: This agreement is for use by authorized employees of the Parties hereto only and is not for general distribution within or outside their companies.
© 2023 AT&T Intellectual Property. All rights reserved. AT&T and the AT&T logo are trademarks of AT&T Intellectual Property.

- Assign a Single Point of Contact (SPOC) to represent City of Gardena. The SPOC will have decision-making authority for most matters that may arise. Ensure that customer's SPOC be available to meet with AT&T Consulting a minimum of once a week for progress updates. The City of Gardena SPOC will be responsible to:
    - Facilitate the scheduling of interviews and information gathering sessions within City of Gardena's organization, unless other arrangements are agreed upon by the SPOCs.
    - Identify and coordinate with the appropriate individuals to review draft deliverables. These reviews must be within the agreed upon timeframe in order to maintain the engagement schedule.
- Provide stakeholder contact information, relevant to this project, prior to the start of the engagement.
- Identify primary on-site contacts and key personnel necessary to conduct required assessment activities in accordance with the project schedule.
- Provide input to and approval of the project schedule.
- Ensure that City of Gardena provided materials will be available on or before the date required as per the project schedule.
- Make City of Gardena resources (e.g., network, application, personnel, and third party vendors) available at appropriate points in this engagement.
- Make appropriate representatives available for the presentation of the final deliverables.
- Provide AT&T Consulting with all relevant documentation and information as it pertains to the business requirements and current network environment at the kickoff meeting.
- Provide all information and materials required for this Statement of Work on a timely basis. To the best of City of Gardena's ability, all information will be complete and accurate.
- Provide all required access (logins, passwords, facilities, personnel, etc.) to AT&T Consulting at the start of the engagement.

If City of Gardena fails to perform any of the responsibilities set forth herein, the parties agree to resolve the situation via the Change Order Process. Notwithstanding the foregoing, neither of the principal parties is bound to use the Change Order Process in the event of a material breach by the other party.

Confidential Information: This agreement is for use by authorized employees of the Parties hereto only and is not for general distribution within or outside their companies.
© 2023 AT&T Intellectual Property. All rights reserved. AT&T and the AT&T logo are trademarks of AT&T Intellectual Property.

9. Communications Plan

a) Kickoff Meeting

- This SOW will be reviewed and any questions or issues will either be resolved at the meeting or will be documented and the results communicated in writing as soon as practical.
- All key stakeholders within City of Gardena will be identified and their email and phone numbers provided for future reference. Ideally, most if not all of these stakeholders will attend the kickoff meeting.
- All individuals that are to receive the weekly status reports will be identified. The agreed upon form of delivery (e.g., hard copy, email) should also be specified.

b) Project Schedule

AT&T Consulting, in coordination with City of Gardena, will jointly develop a project schedule that will, at a minimum, identify milestones and deliverable dates.

c) Status Reports

A status report will be provided weekly and reviewed in the status review meeting.

d) Status Meetings

- The initial expectation is that they will be held weekly, although the timing may be adjusted based on the needs of the engagement.
- At a minimum, the City of Gardena and AT&T Consulting SPOCs will be in attendance. Additional parties will be invited based on the needs of the engagement.
- AT&T Consulting will provide an update as to the overall status of the engagement and plans for the coming week that will involve City of Gardena personnel or resources.
- Discussion and resolution of any non-critical issues that are occurring.
- Review of any issues that have been escalated.
- Notification to the other party of any planned absences of key personnel.
- Review of the Project Schedule.

Confidential Information: This agreement is for use by authorized employees of the Parties hereto only and is not for general distribution within or outside their companies.
© 2023 AT&T Intellectual Property. All rights reserved. AT&T and the AT&T logo are trademarks of AT&T Intellectual Property.

10. Escalation Process

In the event of any issues arising under this SOW, either party may initiate the escalation process by contacting the representative of the other party. If the individuals at any level cannot resolve a performance deficiency to the parties' reasonable satisfaction within the specified period following referral, a party may require that the matter be escalated to the next level. At each level, the parties' representatives will attempt in good faith to address the issue as expeditiously as feasible.

a) AT&T Consulting Escalation Path

Name	Title	Phone Number
CHRISTOPHER GILMORE	MANAGER PROFESSIONAL SERVICES ATC	(760) 889-6905
KRISTEN FITZGERALD	BUSINESS DEVELOPMENT MANAGER 1 ATC	(424) 225-4294
JAMES THOMAS	SALES DIRECTOR CONSULTING SERVICES ATC	(213) 880-0910

b) City of Gardena Escalation Path

To be completed at engagement kickoff.

Name	Title	Phone Number
	SPOC	

11. Initiation of Work

In order for work to begin, AT&T Consulting will require receipt of the fully executed SOW and any required documents (e.g., purchase order, professional services attachment) 30 days prior to the initiation of work. The kickoff meeting will mark the official start of this engagement.

If for any reason both parties agree to start the engagement (i.e., conduct the kickoff meeting) later than 15 Jan 2024, any reference in this SOW to a specific start or completion date of a deliverable or other event shall be extended by one business day for each business day that the kickoff meeting is delayed.

12. Timeline

Based on the information provided to AT&T Consulting by City of Gardena and on our professional experience, AT&T Consulting estimates that the work will be completed in approximately 40 hours over a 6-month period. During the course of this engagement, additional information may be available about the

Confidential Information: This agreement is for use by authorized employees of the Parties hereto only and is not for general distribution within or outside their companies.
© 2023 AT&T Intellectual Property. All rights reserved. AT&T and the AT&T logo are trademarks of AT&T Intellectual Property.

engagement that may impact the estimated timeline. Changes to the estimated timeline will be addressed via the Change Order Process.

13. Engagement Team

Title	Qty	Responsibility
Sr. Consultant – UC	1	The Sr. Consultant - UC is an expert in Unified Communications, including SIP migrations.

14. Charges, Expenses and Invoicing

As consideration for providing the Services detailed in this SOW, UCI will pay AT&T on a time-and-materials basis in accordance with the standard CalNet NextGen rates as indicated in the table below.

The rate structure for this engagement is:

Title	CalNet4 ID #	Number of Resources	Hourly Rate per Person	Estimated Hours	Estimated Labor Charge
Sr. Consultant - UC	ATTSC	1	$250	40	$10,000
Total					**$10,000**

Both parties agree and acknowledge that this engagement is a variable cost offering and should not be considered a “fixed price bid” nor a “not to exceed” quote. The estimated cost of the work defined in this SOW is **$10,000.00**. Changes to the cost may occur only through the Change Order Process.

The above charges and fees exclude travel and travel-related expenses such as hotel accommodations, meal, transportation (airfare, taxi, rental car, mileage, airport parking), etc., taking into account the locale, duration, and timing of the travel. The charges also do not include any taxes or other governmental charges that may apply. All quotes are in US dollars.

Customer agrees to reimburse AT&T Consulting for all travel and travel-related costs incurred in accordance with the above guidelines and the AT&T Contract.

Pricing is based on the defined scope of work as set forth in this SOW. Any additions or changes to this SOW may necessitate changes in pricing. Pricing herein assumes no material project delays will occur that would require AT&T to stop or delay work.

Confidential Information: This agreement is for use by authorized employees of the Parties hereto only and is not for general distribution within or outside their companies.
© 2023 AT&T Intellectual Property. All rights reserved. AT&T and the AT&T logo are trademarks of AT&T Intellectual Property.

AT&T Consulting will provide regular status updates to City of Gardena so that the budgetary impacts may be monitored as work progresses. If during the course of the engagement it is determined that the work will extend past the expected duration, then the Change Order Process will be used to provide additional funding.

15. Change Order Process

To manage any necessary changes to scope, deliverables, resource availability, or underlying project assumptions, we will utilize AT&T Consulting's standard Change Control Process. The process is summarized as follows:

1. Upon recognition of a potential change, City of Gardena and AT&T Consulting will mutually agree upon the nature of the change.

2. AT&T Consulting will determine the effect of the potential change and document the specifics of the change using AT&T Consulting's standard Change Request template. Change Requests will be assigned a unique control number for convenient reference and management.

3. The Change Request will be provided in draft form to City of Gardena's primary project contact for review in a timely manner. Any immediate and unavoidable impact on the Services, such as critical path delays being caused by the potential Change Request, will be communicated as soon as possible to City of Gardena leadership.

4. City of Gardena and AT&T Consulting will come to agreement on the terms of the Change Request and City of Gardena will sign the Change Request document. Prior to incurring any additional effort or cost related to the Change Request, AT&T Consulting must be in receipt of a signed Change Request document.

Confidential Information: This agreement is for use by authorized employees of the Parties hereto only and is not for general distribution within or outside their companies.
© 2023 AT&T Intellectual Property. All rights reserved. AT&T and the AT&T logo are trademarks of AT&T Intellectual Property.

16. Engagement Contacts

City of Gardena
[Contact Name], [Role]
[Address]
[Email] / [Phone]

AT&T Consulting
KRISTEN FITZGERALD, BUSINESS DEVELOPMENT MANAGER 1 ATC
195 S DOUGLAS ST, N/A
EL SEGUNDO CA 90245 United States
kf9158@att.com / +1 4242254294

AT&T Consulting Alternate Contact
CHRISTOPHER GILMORE, MANAGER PROFESSIONAL SERVICES ATC
7337 TRADE ST, N/A
SAN DIEGO CA 92121 United States
cg3503@att.com / +1 7608896905

Confidential Information: This agreement is for use by authorized employees of the Parties hereto only and is not for general distribution within or outside their companies.
© 2023 AT&T Intellectual Property. All rights reserved. AT&T and the AT&T logo are trademarks of AT&T Intellectual Property.

City of Gardena

Gardena City Council Meeting

AGENDA REPORT SUMMARY

Agenda Item No. 13.A
Section: DEPARTMENTAL ITEMS - COMMUNITY DEVELOPMENT
Meeting Date: December 12, 2023

TO: THE HONORABLE MAYOR AND MEMBERS OF THE GARDENA CITY COUNCIL

AGENDA TITLE: INTRODUCTION OF ORDINANCE NO. 1863, Making minor amendments to Ordinance No. 1851 which adopted by reference the 2022 Edition of the California Building Standards Code relating to fence permits and rodent-proofing, amending Section 18.42.070.f of the Gardena Municipal Code and finding the action is exempt from the California Environmental Quality Act pursuant to the Common Sense Exemption of CEQA Guidelines Section 15061(b)(3)

COUNCIL ACTION REQUIRED:

Staff Recommendation: Introduce Ordinance No. 1863 and set a public hearing on the adoption for the meeting of January 9, 2024.

RECOMMENDATION AND STAFF SUMMARY:

On May 23, 2023, the City Council adopted Ordinance No. 1851 adopting these Codes and making certain amendments. The Ordinance was then sent to the California Building Standards Code (CBSC).

On August 3, 2023, the City received notice from the CBSC rejecting changes that were made with regard to the Appendix on rodent proofing and the requirement for permits for fences and retaining walls. In response, staff is recommending that the Appendix on rodent proofing that was previously adopted be deleted and that changes be made with regard to fences and retaining walls as shown in the redline of the Ordinance attached.

The Ordinance includes a determination that adoption is not subject to CEQA pursuant to the common sense exemption set forth in CEQA Guidelines section 15061(b)(3).

FINANCIAL IMPACT/COST:

ATTACHMENTS:

Staff Report - 2022 Building Code Adoption.pdf
Ordinance No. 1863.pdf
Resolution No. 6649.pdf

APPROVED:



_____

Clint Osorio, City Manager

City of Gardena
City Council Meeting

AGENDA STAFF REPORT

AGENDA TITLE:

INTRODUCTION OF ORDINANCE 1863, AN ORDINANCE OF THE CITY OF GARDENA, CALIFORNIA, MAKING MINOR AMENDMENTS TO ORDINANCE NO. 1851 WHICH ADOPTED BY REFERENCE THE 2022 EDITION OF THE CALIFORNIA BUILDING STANDARDS CODE RELATING TO FENCE PERMITS AND RODENTPROOFING, AMENDING SECTION 18.42.070F OF THE GARDENA MUNICIPAL CODE AND FINDING THE ACTION EXEMPT FROM THE CALIFORNIA ENVIRONMENTAL QUALITY ACT PURSUANT TO THE COMMON SENSE EXEMPTION OF CEQA GUIDELINES SECTION 15061(b)(3)

RECOMMENDATION:

Staff respectfully recommends that the City Council introduce Ordinance No. 1863 and set a public hearing on the adoption for the meeting of January 9, 2024.

BACKGROUND:

California law requires cities to adopt the California Building Standards Code (CBSC) which is set forth in Title 24 of the California Code of Regulations. On May 23, 2023 the City Council adopted Ordinance No. 1851 adopting these Codes and making certain amendments. The Ordinance was then sent to the CBSC.

On August 3, 2023, the City received notice from the BSC rejecting changes that were made with regard to the Appendix on rodent proofing and the requirement for permits for fences and retaining walls. In response, staff is recommending that the Appendix on rodent proofing that was previously adopted be deleted and that changes be made with regard to fences and retaining walls as shown in the redline of the Ordinance attached hereto.

When adopting the California State Building Standards Code by reference, state law requires that it first be introduced and then the City Council set a public hearing date, after

which the City Council may adopt the Ordinance. Additionally, prior to adoption the City Council is required to adopt a resolution setting for the findings and rationale for the amendments to the California Building Standards Code as required by law. The same procedure is being followed for the amendment to the Building and Residential Codes. A resolution justifying the changes to the Building Code is attached, but will be adopted at the same time as the Ordinance is adopted. Upon adoption, the Ordinance and Resolution will again be sent to the California Building Standards Commission in accordance with State law.

In addition to amending Title 15, the Ordinance eliminates section 18.42.070F from the Zoning Code. This section created confusion as it erroneously implied that there was a separate fence permit that was issued by the Planning Division in addition to the building permit.

CEQA

The Ordinance includes a determination that adoption is not subject to CEQA pursuant to the common sense exemption set forth in CEQA Guidelines section 15061(b)(3). Rodent proofing is not an Appendix that is adopted by the California Building Standards Code and the changes to the fence permit requirements are being adopted are for the protection of the public health and safety and will not have any environmental effects.

FISCAL REVIEW/COST

There will be no fiscal impact as a result of the adoption of the subject Ordinance.

IN CONCLUSION, Staff respectfully recommends that the City Council introduce Ordinance No. 1863 and set a public hearing on its adoption for its regularly scheduled meeting of January 9, 2024, at which time Resolution No. 6649 will also be adopted.

Submitted by: Greg Tsujiuchi Date: December 12, 2023

Attachments:
Ordinance No. 1863
Resolution No. 6649

ORDINANCE NO. 1863

AN ORDINANCE OF THE CITY OF GARDENA, CALIFORNIA, MAKING MINOR AMENDMENTS TO ORDINANCE NO. 1851 WHICH ADOPTED BY REFERENCE THE 2022 EDITION OF THE CALIFORNIA BUILDING STANDARDS CODE RELATING TO FENCE PERMITS AND RODENTPROOFING, AMENDING SECTION 18.42.070.F OF THE GARDENA MUNICIPAL CODE AND FINDING THE ACTION IS EXEMPT FROM THE CALIFORNIA ENVIRONMENTAL QUALITY ACT PURSUANT TO THE COMMON SENSE EXEMPTION OF CEQA GUIDELINES SECTION 15061(b)(3)

WHEREAS, California Health & Safety Code Section 18901 et seq. provides that the Building Standards Commission shall adopt a California Building Standards Code ("CBSC") based on specified uniform codes with input from various State Departments; and

WHEREAS, the City is required to adopt the CBSC and may make changes if certain findings are met; and

WHEREAS, on May 23, 2023, the City Council of the City of Gardena adopted Ordinance No. 1851 and sent a copy to the California Building Standards Commission ("Commission"); and

WHEREAS, the City received a letter from the Commission regarding certain changes to the CBSC that were made which were not found to be acceptable; and

WHEREAS, the City Council would like to revise certain provisions that it adopted in Ordinance No. 1851 consistent with the direction of the Commission and make a corresponding change to the Zoning Code relating to fence permits as the language erroneously indicates that there is a separate permit required; and

WHEREAS, on December 12, 2023 the City Council introduced this Ordinance and set a public hearing for January 9, 2024; and

WHEREAS, Gardena Municipal Code section 18.52.030 which incorporates the state planning and zoning law for how zoning changes should be processed; and

WHEREAS, Government Code section 65853 provides that an ordinance which does not change property from one zone to another or imposes, modifies, or removes a regulation may be processed as an ordinary ordinance and need not comply with the zoning amendment procedures; and

WHEREAS, the deletion of section 18.42.070F simply eliminates language which created confusion, but does not eliminate the requirement to obtain permits for fences and retaining walls in accordance with the California Building Code and California Residential

Code so that the zoning procedures are not applicable; and

WHEREAS, on January 9, 2024, the City Council held a duly noticed public hearing on this Ordinance; and

WHEREAS, the City Council took into account all evidence presented, both written and oral;

NOW, THEREFORE, THE CITY COUNCIL OF THE CITY OF GARDENA DOES ORDAIN AS FOLLOWS:

SECTION 1. Section 15.06.010 of the Gardena Municipal Code is hereby amened to read as follows:

15.06.010 Adoption of Building Code.

Except as may otherwise be provided in this Title, the California Building Code, 2022 Edition (Parts 1 and 2 of Title 24 of the California Code of Regulations), and only Appendices ~~F (Rodentproofing),~~ J (Grading)~~,~~ and P (Emergency Housing). are hereby adopted by reference and made a part of this chapter as though set forth in full herein. These provisions of Title 24, Parts 1 and 2 shall comprise the Building Code of the City of Gardena.

SECTION 2. Section 15.06.020 of the Gardena Municipal Code which amended Section 105.2, item 2 of the California Building Code is hereby amended to read as follows:

15.06.020 Work exempt from permits.

Section 105.2, items 2 and 4 are hereby amended to read as follows:

2. Fences ~~Wood, chain-link, plastic, metal or similar fences~~ not over 6 feet in height ~~or masonry, concrete fence not over 3 feet in height above the lowest adjacent grade unless supporting a surcharge or impounding class I, II or III-A liquids~~.

4. Retaining walls that are not over ~~4~~ 3 feet ~~(1219 mm)~~ in height measured from the bottom of the footing to the top of the wall, unless supporting a surcharge or impounding Class I, II or IIIA liquids.

SECTION 3. Section 15.10.010 of the Gardena Municipal Code which amended Section R105.2 of the California Residential Code, is hereby amended to read as follows:

15.10.020 Work exempt from permits.

Section R105.2 of the 2022 California Residential Code, items 2 and 4 under “Building” are hereby amended to read as follows:

2. ~~Wood, chain-link, plastic, metal or similar~~ Ffences not over 6 feet in height. ~~or masonry, concrete fence not over 3 feet in height above the lowest adjacent grade unless supporting a surcharge or impounding class I, II or III-A liquids.~~

4. Retaining walls that are not over ~~4~~ 3 feet ~~(1219 mm)~~ in height measured from the bottom of the footing to the top of the wall, unless supporting a surcharge or impounding Class I, II or IIIA liquids.

SECTION 4. Section 18.42.070F of the Gardena Municipal Code is hereby deleted:

~~F. Permit Procedure. No person shall erect, construct or alter a fence or wall unless a permit therefor has been issued by the building and safety division. No permit shall be issued until all fences, walls and hedges on the property conform to the provisions of this section.~~

~~1. Applications. An application for a permit shall be filed by the owner or other person having the right to the possession of the land for which the permit is sought.~~

~~2. Fees. All permit applications shall be accompanied by a filing fee in an amount established by city council resolution, payable to the city to defray the costs incurred by the city in processing the application.~~

SECTION 5. CEQA. The City Council finds that the adoption of the California Buildings Standards Code and local amendments thereof is exempt from the California Environmental Quality Act ("CEQA") under CEQA Guideline section 15061(b)(3) (the commonsense exemption). The action is largely administrative in nature and designed to improve and not degrade environmental quality such that there is no possibility that adopting this Ordinance would adversely affect the environment in any manner that could be significant. Further, except for the amendments that have been adopted, these Codes apply by default.

SECTION 6. Severability. If any provision of this Ordinance is declared to be invalid by a court of competent jurisdiction, it shall not affect any remaining provision hereof. The City Council of the City of Gardena hereby declares that it would have adopted this Ordinance despite any partial invalidity of its provisions.

SECTION 7. Effective Date. This Ordinance shall take effect on the 31st day after adoption.

SECTION 8. Certification. The City Clerk is directed to certify the passage and adoption of this Ordinance; cause it to be entered into the City's book of original ordinances; make a note of the passage and adoption in the records of this meeting; and, within fifteen (15)

days after the passage and adoption of this Ordinance, cause it to be published or posted in accordance with California law.

Passed, approved, and adopted this 9th day of January, 2024.

TASHA CERDA, Mayor

ATTEST:

MINA SEMENZA, City Clerk

APPROVED AS TO FORM:

LISA E. KRANITZ, Assistant City Attorney

RESOLUTION NO. 6649

A RESOLUTION OF THE CITY COUNCIL OF THE CITY OF GARDENA, CALIFORNIA, SETTING FORTH FINDINGS FOR REQUIRED AMENDMENTS TO THE 2022 CALIFORNIA STATE BUILDING CODE RELATIVE TO LOCAL CLIMATIC, TOPOGRAPHIC AND GEOLOGIC CONDITIONS RELATING TO PERMITS FOR FENCES

WHEREAS, California Health & Safety Code Section 18901 et seq. provides that the Building Standards Commission shall adopt a California Building Standards Code ("CBSC") based on specified uniform codes with input from various State Departments; and

WHEREAS, the City is required to adopt the CBSC and may make changes if certain findings are met; and

WHEREAS, on May 23, 2023, the City Council of the City of Gardena adopted Ordinance No. 1851 and sent a copy to the California Building Standards Commission ("CBSC"); and

WHEREAS, the City received a letter from the Commission regarding certain changes to the CBSC that were made which were not found to be acceptable; and

WHEREAS, the City Council would like to revise certain provisions of the Codes that it adopted in Ordinance No. 1851 consistent with the direction of the CBSC and make a corresponding change to the Zoning Code relating to fence permits as the language erroneously indicates that there is a separate permit required; and

WHEREAS, Health and Safety Code Section 17958.7 requires that the City Council, before making any modifications or changes to the CBSC, shall make an express finding that such changes or modifications are reasonably necessary because of local climatic, geologic, or topographic conditions;

NOW, THEREFORE, THE CITY OF GARDENA, DOES HEREBY RESOLVE AS FOLLOWS:

SECTION 1. A copy of Ordinance No. 1863 is attached hereto as Exhibit A.

SECTION 2. Findings Justifying Changes.

A. The change to section 15.06.010 is in compliance with the direction received from the California State Buildings Commission.

B. The changes to section 15.06.020, items 2 and 4 of Section 105.2 of the California Building Code and the changes to section 15.10.020, items 2 and 4 of Section 105.2 of the California Residential Code reducing the height of fences and

retaining walls which require permits are justified by the following local geological conditions. Gardena is prone to seismic activity due to the existence of active earthquake faults in the Southern California area. Due to the high geologic activities in this area, amendments are required to address and clarify special needs for structures in a seismically active area.

SECTION 2. The Community Development Department shall file copies of Resolution this Resolution with the California Building Standards Commission as required by Health and Safety Code Section 17958.7.

SECTION 3. The City Clerk shall certify to the passage and adoption of this resolution; shall cause the same to be entered among the original resolutions of said City; and shall make a minute of the passage and adoption thereof in the records of the proceedings of the City Council of said City in the minutes of the meeting at which the same is passed and adopted.

SECTION 4. This resolution shall be effective immediately.

Passed, approved, and adopted this ____ day of _____, 2024.

_____
TASHA CERDA, Mayor

ATTEST:

_____
MINA SEMENZA
City Clerk

APPROVED AS TO FORM:

_____
CARMEN VASQUEZ, City Attorney

Attachment:
Exhibit A – Ordinance No. 1863

City of Gardena

Gardena City Council Meeting

AGENDA REPORT SUMMARY

Agenda Item No. 13.B
Section: DEPARTMENTAL ITEMS - COMMUNITY DEVELOPMENT
Meeting Date: December 12, 2023

TO: THE HONORABLE MAYOR AND MEMBERS OF THE GARDENA CITY COUNCIL

AGENDA TITLE: INTRODUCTION OF ORDINANCE NO. 1860, Repealing and readopting Chapter 18.43 of the Gardena Municipal Code relating to Density Bonus laws and finding the Ordinance to be exempt pursuant to the common sense exemption of CEQA Guidelines Section 15061(b)(3)

COUNCIL ACTION REQUIRED:

Staff Recommendation: Conduct a Public Hearing and Introduce Ordinance No. 1860

RECOMMENDATION AND STAFF SUMMARY:

State law includes provisions of law known as the Density Bonus Law ("DBL") which provides incentives for developers to provide affordable housing. The DBL requires the City to adopt an ordinance regarding implementing this law and to keep the ordinance current.

Since 2012, the DBL has been amended by more than 18 bills adopted by the Legislature. Each time, the City must update its Density Bonus Ordinance to ensure that the City's regulations that are consistent with State law. For this reason, staff is recommending that the City repeal Chapter 18.43 in its entirety and adopt a new Chapter 18.43 which will adopt the State DBL by reference as it is amended from time to time.

On November 7, 2023, the Planning Commission considered the recommendation to the City on the ordinance involving repealing and readopting Chapter 18.43 of the Gardena Municipal Code relating to Density Bonus laws. At the close of the public hearing, the Commission adopted Resolution No. PC 19-23, recommending that the City Council adopt Ordinance No. 1860, by a 4-0 vote.

This zone text amendment is exempt from the California Environmental Quality Act (CEQA) pursuant to the common sense exemption set forth in Guidelines section 15061(b)(3).

FINANCIAL IMPACT/COST:

None.

ATTACHMENTS:

Staff Report - Ordinance No. 1860.pdf
PC Resolution No. PC 19-23.pdf
Ordinance No. 1860.pdf

APPROVED:



_____

Clint Osorio, City Manager

City of Gardena
City Council Meeting

AGENDA STAFF REPORT

AGENDA TITLE:

INTRODUCTION OF ORDINANCE 1860, Repealing and readopting Chapter 18.43 of the Gardena Municipal Code relating to Density Bonus laws and finding the Ordinance to be exempt pursuant to the common sense exemption of CEQA Guidelines Section 15061(b)(3)

RECOMMENDATION:

Staff Recommendation: Conduct Public Hearing and Introduce Ordinance No. 1860.

BACKGROUND:

State law includes provisions of law known as the Density Bonus Law ("DBL") which provides incentives for developers to provide affordable housing. The DBL requires the City to adopt an ordinance regarding implementing this law and to keep the ordinance current.

In July 2012, the City Council adopted Ordinance No. 1739, adding Chapter 18.43 of the Gardena Municipal Code, establishing the City's density bonus procedures in accordance with Government Code Section 65915, which Chapter has been amended numerous times as state law had been amended. Consistent with State law, the City's Density Bonus Ordinance allows a developer to increase density on a property above the maximum allowed density set forth in the City's General Plan Land Use Plan and corresponding zoning designation.

In exchange for the increased density, a certain number of new affordable dwelling units must be reserved at below market rates. A project which provides the requisite amount of affordable housing is also eligible for incentives/concessions and waivers of development standards. An incentive or concession is basically a reduction in site development standards or a modification of zoning code requirements or architectural design requirements that result in identifiable and actual cost reductions. The number of

incentives or concessions a project receives is dependent on the type and amount of affordable housing provided.

Waivers are required where the development standard would have the effect of physically precluding the construction of an affordable development. There is no limit to the number of waivers a developer may request.

While affordable housing is the usual method for an applicant to achieve a density bonus, these provisions also apply to applicants who donate land or provide childcare facilities.

Since 2012, the DBL has been amended by more than 18 bills adopted by the Legislature. Each time, the City must update its Density Bonus Ordinance to ensure that the City's regulations that are consistent with State law. For this reason, staff is recommending that the City repeal Chapter 18.43 in its entirety and adopt a new Chapter 18.43 which will adopt the State DBL by reference as it is amended from time to time. Chapter 18.43 does set forth procedures and contain certain requirements that are not included in the state law.

2023 LEGISLATIVE SESSION

This past Legislative session, there were several bills that amended the density bonus provisions. The following is a summary of the changes under these amendments, and which would be adopted by reference under Ordinance No. 1860:

- A housing project that is 100 percent affordable for lower income units is now entitled to five incentives instead of four. The lower income requirement does not apply to:
    - Managers' unit(s); and
    - Moderate income units which may account for up to 20 percent of the total units.
- A for-sale housing project that includes at least 16 percent of the units for very low income or at least 45 percent for persons and families of moderate income is entitled to four incentives.

- The language was amended to make clear that the maximum allowable residential density or base density is the greatest number of units allowed under the general plan, specific plan, or zoning ordinance.

- Allows for up to an additional 50 percent density bonus stacked on top of other density bonuses for a 100 percent combined density bonus when certain housing is provided.

- An applicant must agree and ensure that an affordable for-sale unit is sold to and occupied by an income-qualified person or family.

- The definition of what constitutes a development standard has been amended to provide that it includes a regulation that is adopted by the city or that is enacted by initiative or referendum.

COMPLIANCE WITH HOUSING PROGRAMS of 2021 – 2029 HOUSING ELEMENT

Adoption of this Ordinance will satisfy the program contained in the City's 6th Cycle Housing Element for the 2021 – 2029 period which required the City to update its Density Bonus Ordinance. Adoption will automatically incorporate the changes to the DBL that will become effective on January 1, 2025.

ENVIRONMENTAL REVIEW

This zone text amendment is exempt from the California Environmental Quality Act (CEQA) pursuant to the common sense exemption set forth in Guidelines section 15061(b)(3) that CEQA only applies to projects which have the potential for causing a significant effect on the environment and where it can be seen with certainty that there is no possibility that the activity will have a significant effect, the activity is not subject to CEQA. The primary changes in this Ordinance are to bring the City's Zoning Code into compliance with recent legislation regarding density bonus. As these requirements are already in place due to the fact that State law preempts the City's ordinances, there are no actual changes due to this clean-up.

PLANNING COMMISSION ACTION

On November 7, 2023, the Planning Commission considered the recommendation to the City on the ordinance involving repealing and readopting Chapter 18.43 of the Gardena Municipal Code relating to Density Bonus laws. At the close of the public hearing, the Commission adopted Resolution No. PC 19-23, recommending that the City Council adopt Ordinance No. 1860, by a 4-0 vote.

Since the Planning Commission meeting one non-substantive change was made to add 18.43 060G, which simply makes clear the requirement of state law requiring replacement of affordable housing. As this is already a requirement of law, it was not necessary to return the item to the Planning Commission.

Submitted by: Amanda Acuna Date: December 12, 2023

ATTACHMENTS

A – Planning Commission Resolution No. PC 19-23, recommending the City Council approve the Ordinance

B – Draft Ordinance No. 1860

RESOLUTION NO. PC 19-23

A RESOLUTION OF THE PLANNING AND ENVIRONMENTAL QUALITY COMMISSION OF THE CITY OF GARDENA, CALIFORNIA RECOMMENDING THAT THE CITY COUNCIL ADOPT ORDINANCE NO. 1860 REPEALING AND READOPTING CHAPTER 18.43 OF THE GARDENA MUNICIPAL CODE RELATING TO DENSITY BONUS LAWS AND FINDING THE ORDINANCE TO BE EXEMPT PURSUANT TO THE COMMON SENSE EXEMPTION OF CEQA GUIDELINES SECTION 15061(b)(3)

THE PLANNING COMMISSION OF THE CITY OF GARDENA, CALIFORNIA, DOES HEREBY RESOLVE AS FOLLOWS:

SECTION 1. RECITALS.

A. In February 2023 the City adopted its 6th Cycle Housing Element for the 2021-2029 period.

B. The Housing Element included a program to update the City's Density Bonus Ordinance.

C. Given the complexity of the Density Bonus Law and the frequency with which it is amended, the City desires to adopt the law by reference with local implementation procedures.

D. On November 7, 2023 the Planning Commission of the City of Gardena held a duly noticed public hearing on the draft Ordinance at which time it considered all evidence, both written and oral.

NOW, THEREFORE, THE PLANNING AND ENVIRONMENTAL QUALITY CONTROL COMMISSION OF THE CITY OF GARDENA DOES HEREBY RESOLVE AS FOLLOWS:

The Planning Commission hereby recommends that the City Council adopt the Ordinance attached hereto as Exhibit A repealing and readopting Chapter 18.43 of the Gardena Municipal Code relating to density bonus laws. For all the reasons set forth in the reasoning provided by staff, the Planning Commission believes that these changes represent good land use practices which are required by public necessity, convenience and the general welfare.

PASSED, APPROVED, AND ADOPTED this 7th day of November 2023.

Vice Chair for Stephen Langley

DERYL HENDERSON, CHAIR
PLANNING AND ENVIRONMENTAL
QUALITY COMMISSION

ATTEST:

GREG TSUJIUCHI, SECRETARY
PLANNING AND ENVIRONMENTAL QUALITY COMMISSION
STATE OF CALIFORNIA
COUNTY OF LOS ANGELES
CITY OF GARDENA

I, Greg Tsujiuchi, Planning and Environmental Quality Commission Secretary of the City of Gardena, do hereby certify that the foregoing Resolution was duly adopted by the Planning and Environmental Quality Commission of the City of Gardena at a regular meeting thereof, held the 7th day of November 2023, by the following vote:

AYES: Wright-Scherr, Langley, Kanhan, Sherman
NOES:
ABSENT: Henderson

Attachments:

Exhibit A –Ordinance No. 1860

ORDINANCE NO. 1860

AN ORDINANCE OF THE CITY COUNCIL OF THE CITY OF GARDENA, CALIFORNIA, REPEALING AND READOPTING CHAPTER 18.43 OF THE GARDENA MUNICIPAL CODE RELATING TO DENSITY BONUS LAWS AND FINDING THE ORDINANCE TO BE EXEMPT PURSUANT TO THE COMMON SENSE EXEMPTION OF CEQA GUIDELINES SECTION 15061(b)(3)

WHEREAS, in February 2023 the City adopted its 6th Cycle Housing Element for the 2021-2029 period; and

WHEREAS, the Housing Element included a program to update the City's Density Bonus Ordinance; and

WHEREAS, given the complexity of the Density Bonus Law and the frequency with which it is amended, the City desires to adopt the law by reference with local implementation procedures; and

WHEREAS, on November 7, 2023, the Planning Commission held a duly noticed public hearing on proposed Ordinance No. 1860 at which time it considered all evidence presented, both written and oral; and

WHEREAS, after the close of the public hearing the Planning Commission adopted Resolution No. PC 19-23 recommending that the City Council adopt the proposed Ordinance; and

WHEREAS, on December 12, 2023, the City Council held a duly noticed public hearing on proposed Ordinance No. 387 at which time it considered all evidence presented, both written and oral;

NOW, THEREFORE, THE CITY COUNCIL OF THE CITY OF GARDENA, CALIFORNIA, DOES HEREBY ORDAIN AS FOLLOWS:

SECTION 1. Chapter 18.43 of the Gardena Municipal Code is hereby repealed and a new Chapter 18.43 is hereby added to read as follows:

CHAPTER 18.43
DENSITY BONUS AND OTHER INCENTIVES

18.43.010 Purpose.

The purpose of this Chapter is to implement the requirements of the Density Bonus Law set forth at Government Code section 65915, *et seq*.

18.43.020 Adoption by reference.

The state Density Bonus Law, set forth at Chapter 4.3 of the Planning and Zoning law of California and found at Government Code sections 65915 through 65918,

as the same may be amended from time to time, is hereby adopted by reference as the City of Gardena's Density Bonus provisions and shall be implemented in accordance with this Chapter.

18.43.030 Definitions.

In addition to the definitions set forth in the Density Bonus Law, the following definitions shall apply to this chapter:

"Affordable housing agreement" shall mean an agreement between the city and the applicant guaranteeing the affordability of the rental or ownership affordable units in accordance with this chapter and Government Code Section 65915.

"Director" shall mean the Director of Community Development or the Director's designee.

18.43.040 Applicability.

This Chapter shall apply to any housing development that is entitled to receive a density bonus pursuant to the state Density Bonus Law.

18.43.050 Procedures.

A. Application submittal. An application for a density bonus, including an incentive or concession and waiver, shall be filed concurrently with an application for a housing development and shall be processed concurrently.

B. Application contents. An application for a density bonus shall include the following information:

1. The number of density bonus units being requested;

2. A reduced parking ratio request pursuant to Government Code section 65915(p);

3. An incentive(s) or concession(s) request pursuant to Government Code section 65915(d) that results in identifiable and actual cost reductions to provide for the affordable housing; and

4. A waiver(s) or reduction of development standard(s) request pursuant to Government Code section 65915(e) that would have the effect of physically precluding the construction of the housing development at the densities or with the allowed incentive(s) or concession(s).

C. If an application for a density bonus is incomplete, the applicant shall be timely notified of such incompleteness in accordance with the provisions of applicable law.

D. If a proposed housing development would be inconsistent with the City's Zoning Code or the state Density Bonus Law, the applicant shall be provided notice of such inconsistency in accordance with the Housing Accountability Act, Government Code section 65589.5.

E. A density bonus application shall be approved or denied in conjunction with the housing development application by the body approving such application within the time frames required for approval of such development.

18.43.060 Requirements.

A. The applicant for a density bonus shall enter into a regulatory agreement with the City in a form to be approved by the City Attorney and said agreement shall be recorded against the property. The regulatory agreement shall be approved by the body approving the underlying project. If an appeal is taken of the project, then the regulatory agreement shall be approved by the decision maker on appeal.

B. The applicant shall be required to pay the City's costs for any third-party consultants required to assist the City in drafting a regulatory agreement, developing guidelines, verifying the eligibility of owners or tenants of the affordable units, or any other matter relating to the density bonus.

C. The required affordable dwelling units shall be constructed concurrently with market-rate units unless both the body approving the underlying project and the developer agree within the affordable housing agreement to an alternative schedule for development.

D. The exterior design and construction of the affordable dwelling units shall be consistent with the exterior design and construction of the total project development and shall be consistent with any affordable residential development standards that may be prepared by the City.

1. The affordable units shall be similar in size and number of bedrooms to the market-rate units. If the development project includes a range of unit sizes, then the affordable units shall provide a range of unit sizes in proportion to the market-rate units.

2. If the project includes a subdivision, the lots with affordable units shall be of similar size to the lots with market rate units. If the development project includes a range of lot sizes, the lots with affordable units shall be no smaller than the smallest lots with market-rate units.

E. The affordable units shall have the same amenities as the market rate units, including the same access to and enjoyment of common open space, parking, storage, and other facilities in the residential development, provided at an affordable rent or at affordable ownership cost specified by Health and Safety Code section 50052.5 and California Code of Regulations Title 25, Section 6910

– 6924, as the same may be amended from time to time. Developers are strictly prohibited from discriminating against tenants or owners of affordable units in granting access to and full enjoyment of any community amenities available to other tenants or owners outside of their individual units.

F. If the development project is for units that will be sold, then the affordable dwelling units shall also be for-sale units. The regulatory agreement may make provisions for rental of the units for the same level of affordability that qualified the applicant for the density bonus if the unit is not sold within a period of time specified in the agreement.

G. The development project shall be subject to the replacement requirements for low and very-low income housing as required by Government Code section 65915(c)(3).

SECTION 2. Effective Date. This Ordinance shall take effect on the thirty-first day after passage.

SECTION 3. CEQA. This Ordinance is categorically exempt from CEQA pursuant to the common sense exemption set forth in Guidelines section 15061(b)(3) that CEQA only applies to projects which have the potential for causing a significant effect on the environment and where it can be seen with certainty that there is no possibility that the activity will have a significant effect, the activity is not subject to CEQA. This Ordinance enacts a procedure as required by state law and does not change the density, intensity, or allowed uses and passage of this Ordinance would not have other effects on the environment. The changes are not for any specific project but is regulatory in nature and therefore will not impact any environmental resource of hazardous or critical concern, will not create cumulative impacts, or impacts to scenic highways, hazardous waste sites, or historical resources. This Ordinance simply implements state law. As such, staff is directed to file a Notice of Exemption pursuant to CEQA Guidelines sections 15061(b)(3).

SECTION 4. Severability. If any provision of this Ordinance is held to be unconstitutional, it is the intent of the City Council that such portion of this Ordinance be severable from the remainder and that the remainder be given full force and effect.

SECTION 5. Certification. The City Clerk shall certify to the adoption of this Ordinance.

PASSED, APPROVED AND ADOPTED this _____ day of _____, 2023.

_____
TASHA CERDA, Mayor

ATTEST:

_____
Mina Semenza, City Clerk

APPROVED AS TO FORM:

_____

Carmen Vasquez, City Attorney

City of Gardena

Gardena City Council Meeting

AGENDA REPORT SUMMARY

Agenda Item No. 14.A
Section: DEPARTMENTAL ITEMS - ELECTED & CITY MANAGER'S OFFICES
Meeting Date: December 12, 2023

TO: THE HONORABLE MAYOR AND MEMBERS OF THE GARDENA CITY COUNCIL

AGENDA TITLE: INTRODUCTION OF ORDINANCE NO. 1861, Amending Section 2.60.100 (Open Market Procedure) of Chapter 2.60 (Purchasing System) of Title 2 (Administration and Personnel) of the Gardena Municipal Code

COUNCIL ACTION REQUIRED:

Staff Recommendation: Introduce Ordinance No. 1861, and Adopt the Ordinance at the next City Council meeting on January 9, 2024.

RECOMMENDATION AND STAFF SUMMARY:

Staff respectfully recommends that the City Council introduce Ordinance No. 1861, and adopt the ordinance at the next City Council meeting on January 9, 2024.

Ordinance No. 1861 proposes an amendment to section 2.60.100 of the Gardena Municipal Code, and is being submitted for City Council's consideration to increase the City Manager's approval limit for purchases of supplies, equipment and contractual services and the sale of personal property of an estimated value from the current limit of $30,000 to $50,000.

The last time the City increased City Manager approval limit was in 2017. In the over six years since that increase, with inflation increasing at a rapid pace, costs have consistently gone up for everything including; purchases of supplies, equipment and contract services; resulting in more projects exceeding the authority of the City Manager. In addition to the increased costs, staff completed a recent survey of cities in California and found that the average purchasing authority for cities of similar size to Gardena was $55,000.

Therefore, staff recommends increasing the City Manager's purchasing approval limit from $30,000 to $50,000.

FINANCIAL IMPACT/COST:

None

ATTACHMENTS:

ORDINANCE No. 1861.rtf.pdf

APPROVED:



_____

Clint Osorio, City Manager

DocuSign Envelope ID: 6B8DFC95-D589-4000-B26D-F9F5DAA52AF6

ORDINANCE NO. 1861

AN ORDINANCE OF THE CITY COUNCIL OF THE CITY OF GARDENA, CALIFORNIA, AMENDING SECTION 2.60.100 (OPEN MARKET PROCEDURE) OF CHAPTER 2.60 (PURCHASING SYSTEM) OF TITLE 2 (ADMINISTRATION AND PERSONNEL) OF THE GARDENA MUNICIPAL CODE

THE CITY COUNCIL OF THE CITY OF GARDENA, CALIFORNIA, DOES HEREBY ORDAIN, AS FOLLOWS:

SECTION 1. Section 2.60.100 of the Gardena Municipal Code is amended to read, as follows:

2.60.100 Open market procedure.

Except as otherwise required under federal or state law, purchases of supplies, equipment and contractual services and the sale of personal property of an estimated value of fifty thousand dollars ($50,000) or less may be made in the open market by the purchasing officer. Purchases greater than fifty thousand dollars ($50,000) shall be approved by the City Council. The purchasing officer shall attempt to obtain information relating to prices and availability of such supplies, equipment or services from different sources prior to making the purchase. Whenever possible, local vendors shall be included as sources.

SECTION 2. Severability. If any section, subsection, subdivision, paragraph, sentence, clause or phrase of this ordinance, or any part thereof is for any reason held to be unconstitutional, such decision shall not affect the validity of the remaining portion of this ordinance or any part thereof. The City Council hereby declares that it would have passed each section, subsection, subdivision, paragraph, sentence, clause or phrase thereof, irrespective of the fact that any one or more section, subsection, subdivision, paragraph, sentence, clause or phrase be declared unconstitutional.

SECTION 3. Certification. The City Clerk shall certify the passage of this ordinance and shall cause the same to be entered in the book of original ordinances of said City; shall make a minute passage and adoption thereof in the records of the meeting at which time the same is passed and adopted; and shall, within fifteen (15) days after the passage and adoption thereof, cause the same to be published as required by law, in a publication of general circulation.

DocuSign Envelope ID: 6B8DFC95-D589-4000-B26D-F9F5DAA52AF6

SECTION 4. Effective Date. This ordinance shall not become effective or be in force until thirty (30) days from and after the date of its adoption.

Passed, approved, and adopted this 9th day of January, 2024.

TASHA CERDA, Mayor

ATTEST:

MINA SEMENZA, City Clerk

APPROVED AS TO FORM:

CARMEN VASQUEZ, City Attorney

City of Gardena

Gardena City Council Meeting

AGENDA REPORT SUMMARY

Agenda Item No. 14.B
Section: DEPARTMENTAL ITEMS - ELECTED & CITY MANAGER'S OFFICES
Meeting Date: December 12, 2023

TO: THE HONORABLE MAYOR AND MEMBERS OF THE GARDENA CITY COUNCIL

AGENDA TITLE: INTRODUCTION OF ORDINANCE NO. 1862, Amending Section 3.24.020 (Delegation of claims authority to city manager) of Chapter 3.24 (Claims and Demands Against the City) of Title 3 (Revenue and Finance) of the Gardena Municipal Code

COUNCIL ACTION REQUIRED:

Staff Recommendation: Introduce Ordinance No. 1862, and Adopt the Ordinance at the next City Council meeting on January 9, 2024.

RECOMMENDATION AND STAFF SUMMARY:

Staff respectfully recommends that the City Council introduce Ordinance No. 1862, and adopt the ordinance at the next City Council meeting on January 9, 2024.

Ordinance No. 1862 proposes an amendment to section 3.24.020 of the Gardena Municipal Code, and is being submitted for City Council's consideration to increase the City Manager's authorization to allow, compromise or settle a claim against the City from the current amount of $25,000 to $50,000.

The last time the City increased City Manager authorization limit was in 2014. In the over nine years since that increase, inflation costs have consistently gone up for everything including; compromise and settlement claims against the City.

Therefore, staff recommends increasing City Manager's authority to allow, compromise, or settle a claim against the City from the current amount of $25,000 to $50,000.

FINANCIAL IMPACT/COST:

N/A

ATTACHMENTS:

ORDINANCE No. 1862.rtf.pdf

APPROVED:



_____

Clint Osorio, City Manager

DocuSign Envelope ID: 67AAA7AB-5040-4F4B-B841-54518F58AC75

ORDINANCE NO. 1862

AN ORDINANCE OF THE CITY COUNCIL OF THE CITY OF GARDENA, CALIFORNIA, AMENDING SECTION 3.24.020 (DELEGATION OF CLAIMS AUTHORITY TO CITY MANAGER) OF CHAPTER 3.24 (CLAIMS AND DEMANDS AGAINST THE CITY) OF TITLE 3 (REVENUE AND FINANCE) OF THE GARDENA MUNICIPAL CODE

WHEREAS, Section 3.24.020 of the Gardena Municipal Code, last amended in 2014, currently authorizes the City Manager to allow, compromise, or settle claims in an amount not to exceed twenty-five thousand dollars ($25,000.00); and

WHEREAS, the City Council wishes to increase the City Manager's authority with regard to claims so that claims can be more expeditiously settled;

NOW, THEREFORE, THE CITY COUNCIL OF THE CITY OF GARDENA, CALIFORNIA, DOES HEREBY ORDAIN, AS FOLLOWS:

SECTION 1. Section 3.24.020 of the Gardena Municipal Code is amended to read, as follows:

3.24.020 Delegation of claims authority to city manager.

A. The City Manager or his designee is authorized and directed to perform, on behalf of the City, all functions relating to claims against the City, in the manner provided in California Government Code section 900 et seq.

B. The City Manager or his designee is authorized to allow, compromise or settle a claim against the City, if the payment thereof does not exceed fifty thousand dollars ($50,000).

SECTION 2. Severability. If any section, subsection, subdivision, paragraph, sentence, clause or phrase of this ordinance, or any part thereof is for any reason held to be unconstitutional, such decision shall not affect the validity of the remaining portion of this ordinance or any part thereof. The City Council hereby declares that it would have passed each section, subsection, subdivision, paragraph, sentence, clause or phrase thereof, irrespective of the fact that any one or more section, subsection, subdivision, paragraph, sentence, clause or phrase be declared unconstitutional.

SECTION 3. Certification. The City Clerk shall certify the passage of this ordinance and shall cause the same to be entered in the book of original ordinances of said City; shall make a minute passage and adoption thereof in the records of the meeting at which time the same is passed and adopted; and shall, within fifteen (15) days after the passage and adoption thereof, cause the same to be published as

DocuSign Envelope ID: 67AAA7AB-5040-4F4B-B841-54518F58AC75

required by law, in a publication of general circulation.

SECTION 4. Effective Date. This ordinance shall not become effective or be in force until thirty (30) days from and after the date of its adoption.

Passed, approved, and adopted this 9th day of January, 2024.

TASHA CERDA, Mayor

ATTEST:

MINA SEMENZA, City Clerk

APPROVED AS TO FORM:

CARMEN VASQUEZ, City Attorney

City of Gardena

Gardena City Council Meeting

AGENDA REPORT SUMMARY

Agenda Item No. 14.C
Section: DEPARTMENTAL ITEMS - ELECTED & CITY MANAGER'S OFFICES
Meeting Date: December 12, 2023

TO: THE HONORABLE MAYOR AND MEMBERS OF THE GARDENA CITY COUNCIL

AGENDA TITLE: INTRODUCTION OF ORDINANCE NO. 1864, Amending Section 2.04.170 of the Gardena Municipal Code Setting the Compensation of the Mayor and Members of the City Council as Authorized by Senate Bill 329

COUNCIL ACTION REQUIRED:

Staff Recommendation: Introduce Ordinance Number 1864 and Adopt the Ordinance at the next City Council meeting on January 9, 2024.

RECOMMENDATION AND STAFF SUMMARY:

State law regulates maximum compensation for councilmembers and when those adjustments can become effective. The compensation schedule for general law cities has not been adjusted since 1984, meaning that city council compensation has not kept pace with inflation. On June 29, 2023, Governor Gavin Newsom signed into law Senate Bill 329 (“SB 329”). The bill allows cities a one-time chance to “reset” city council salaries to take into account inflation, the work done by local government officials, and the need to ensure that people are not discouraged from seeking city office due to the low pay and high demands of that office.

State Senator Dodd (who is the author of SB 329) wrote in introduction this bill:

> "City Councilmembers have one of the hardest jobs in California government. They deal with a wide range of issues, from street maintenance to emergency response duties. And all too often, they do this job with very little financial compensation. No one runs for City Council in order to make money. But the low levels of pay make it much harder for them to balance their careers and personal obligations with the calling to serve their community. The Legislature has not raised the base pay amounts for City Councilmembers since 1984. It's time those amounts caught up to the present economic reality, especially with the rapid increase in inflation we've seen recently. Raising the pay will also make it easier for members of marginalized communities to serve. City Councils should be reflective of the communities they represent and I believe raising their compensation is an important step to achieving that equitable outcome."

The City of Gardena City Council last voted for a Council salary adjustment in 2002. Gardena Municipal Code 2.04.170 sets salaries for City Council Members, including the Mayor at $650

per month. In accordance with Government Code 36516.1, GMC 2.04.170 also provides the Mayor additional compensation in the amount of $300 per month. Gardena City Council salaries have not changed since 2002 (21 years).

SB 329 increased the maximum amount of salary, based upon the population of the city that may be approved by an ordinance passed by the City Council. The new salary amount for City Council Members in Gardena and all other cities of 50,000 to 75,000 population could be $1,600 per month.

The increased limits may be applied any time after January 1, 2024. However, Government Code 36516.5 provides that changes in council compensation do not apply during the term of a councilmember's term of office. Any council salary increase may only take effect when at least one council member begins a new term. Accordingly, should the Council adopt an ordinance to increase the salary, such new salary will not take effect until after the March 2024 election.

SB 329 does not affect Government Code 36516.1, which allows the Council to approve additional compensation for an elected Mayor. There is no set maximum amount for the Mayor's compensation, per Government Code 36516.1. The City Council has the authority to adjust the Mayor's compensation at their discretion at any time.

At the November 14, 2023, city council meeting, staff presented a report on Senate Bill 329 for the City Council's discussion and consideration. At the conclusion of the City Council's discussion on November 14, 2023, the City Council directed staff to bring back an ordinance for further consideration.

Proposed Ordinance Number 1864 has been prepared for introduction to amend Gardena municipal code section 2.04.170, which would increase the compensation of each member of the City Council, including the Mayor from $650 to $1,600 per month as authorized by Government Code Section 36516 and pursuant to Senate Bill 329. In addition, the proposed Ordinance would increase the additional compensation received by the Mayor pursuant to Government Code Section 36516.1 from $300 to $1,000 per month.

FINANCIAL IMPACT/COST:

FY 24: $17,452

FY 25: $70,227

FY 26: $70,607

ATTACHMENTS:

ORDINANCE No. 1864.pdf

APPROVED:



_____

Clint Osorio, City Manager

DocuSign Envelope ID: 0C23611A-100C-4A74-80DA-F65CE831C39E

ORDINANCE NO. 1864

AN ORDINANCE OF THE CITY COUNCIL OF THE CITY OF GARDENA, CALIFORNIA, AMENDING SECTION 2.04.170 OF THE GARDENA MUNICIPAL CODE SETTING THE COMPENSATION OF THE MAYOR AND MEMBERS OF CITY COUNCIL AS AUTHORIZED BY SENATE BILL 329

WHEREAS, Senate Bill 329 was adopted to "reset" city council salaries to reflect the important work done by city council members, to take into account the impacts of inflation and economic realities on those who serve as city council members, and to encourage more persons to consider service as council members by making the compensation more reflective of the time and work being performed; and

WHEREAS, the City Council has not had an increase in compensation since 2002 therefore its salaries were no longer reflective of the time and effort put forth by an elected official in the City; and

WHEREAS, reasonable council member compensation acknowledges the civic commitment of service and provides an additional incentive for a diverse candidate pool as possible; and

WHEREAS, the City Council reviewed and discussed the value and important impacts of Senate Bill 329 on the future governance of the City and found that it agreed with the intent of the state legislature; and

WHEREAS, under Senate Bill 329, the salaries for the City Council of the City of Gardena may be set at $1,600 per month based on the City's population; and

WHEREAS, pursuant to Government Code section 36516.5, salary increases set forth herein may take effect only when at least one member of the Council commences a new term; and

WHEREAS, SB 329 does not affect Government Code 36516.1, which allows the Council to approve additional compensation for an elected Mayor. The Attorney General has ruled that the prohibition against "mid-term" salary increases applicable to Council Members (pursuant to Government Code Section 36516.5) does not apply to directly-elected Mayors. The additional compensation for performing mayoral duties is not received as "a councilperson." 89 Ops.Cal.Atty.Gen. 159 (2006); and

WHEREAS, the City Council now desires to amend the Gardena Municipal Code relating to the compensation paid to persons elected to serve the people of Gardena as City Councilmembers and Mayor as authorized by state law and pursuant to Senate Bill 329 and Government Code 36516.1.

DocuSign Envelope ID: 0C23611A-100C-4A74-80DA-F65CE831C39E

NOW, THEREFORE, THE CITY COUNCIL OF THE CITY OF GARDENA, CALIFORNIA, DOES HEREBY ORDAIN, AS FOLLOWS:

SECTION 1. Section 2.04.170 of the Gardena Municipal Code is amended to read, as follows:

2.04.170 Compensation of Mayor and City Council.

A. Pursuant to Government Code Section 36516 each member of the City Council, including the Mayor, shall receive as compensation a salary of one thousand and six hundred dollars ($1,600) per month. That the salary shall become payable only on or after the date upon which one or more members of the City Council become eligible therefore by virtue of beginning a new term of office as provided for in California Government Code Section 36516.5.

B. Pursuant to Government Code Section 36516.1 the Mayor shall receive as compensation an additional one thousand dollars ($1,000) per month.

C. Any amounts paid to the Mayor or members of the City Council for reimbursements pursuant to Government Code section 36514.5 or for retirement and health and welfare benefits shall not be included in determining salary pursuant to this section.

SECTION 2. Severability. If any section, subsection, subdivision, paragraph, sentence, clause or phrase of this ordinance, or any part thereof is for any reason held to be unconstitutional, such decision shall not affect the validity of the remaining portion of this ordinance or any part thereof. The City Council hereby declares that it would have passed each section, subsection, subdivision, paragraph, sentence, clause or phrase thereof, irrespective of the fact that any one or more section, subsection, subdivision, paragraph, sentence, clause or phrase be declared unconstitutional.

SECTION 3. Certification. The City Clerk shall certify the passage of this ordinance and shall cause the same to be entered in the book of original ordinances of said City; shall make a minute passage and adoption thereof in the records of the meeting at which time the same is passed and adopted; and shall, within fifteen (15) days after the passage and adoption thereof, cause the same to be published as required by law, in a publication of general circulation.

DocuSign Envelope ID: 0C23611A-100C-4A74-80DA-F65CE831C39E

SECTION 4. Effective Date. This ordinance shall not become effective or be in force until thirty (30) days from and after the date of its adoption.

Passed, approved, and adopted this 9th day of January, 2024.

TASHA CERDA, Mayor

ATTEST:

MINA SEMENZA, City Clerk

APPROVED AS TO FORM:

CARMEN VASQUEZ, City Attorney

City of Gardena

Gardena City Council Meeting

AGENDA REPORT SUMMARY

Agenda Item No. 15.A
Section: DEPARTMENTAL ITEMS - POLICE
Meeting Date: December 12, 2023

TO: THE HONORABLE MAYOR AND MEMBERS OF THE GARDENA CITY COUNCIL

AGENDA TITLE: Authorization to Purchase Seven (7) Patrol Vehicles from National Auto Fleet Group in the Amount of $367,104 and Expend Build-Out Costs in the Amount of $199,127 for a total of $566,231

COUNCIL ACTION REQUIRED:

Staff Recommendation: Authorize Purchase and Build-Out Costs

RECOMMENDATION AND STAFF SUMMARY:

Staff respectfully recommends that the City Council authorize the Police Department to purchase seven (7) new 2024 Dodge Durango Pursuit AWD vehicles from National Auto Fleet Group for a total cost of $367,104 which includes a 10.25% state sales tax and $8.75 tire tax for each vehicle.

The ongoing replacement of capital equipment is necessary to maintain a fleet inventory that is safe, efficient, and reliable. This purchase of seven (7) new patrol vehicles will replace the older vehicles that have reached the end of their useful service life due to age, mileage, and general wear and tear.

National Auto Fleet Group will sell and deliver the new vehicles available under the Sourcewell Master Vehicle Contract #120716, formerly known as the National Joint Powers Alliance (NJPA) contract. The total price for each vehicle, including state sales tax and tire tax, is $52,443. Terms are net 30 days, and delivery is within 120 to 180 days thereafter. Seven (7) vehicles will be assigned to patrol and will be purchased using the City's Vehicle Replacement Fund.

The total build-out costs for outfitting the vehicles with the necessary South Bay Regional Public Communications Authority (SBRPCA) equipment is approximately $28,447 for each of the seven (7) patrol vehicles. The total cost of the buildouts is $199,127.

FINANCIAL IMPACT/COST:

Fiscal Year 2023-2024- $566,231 using the City's Vehicle Replacement Fund

ATTACHMENTS:

Agenda Staff Report.pdf

National Auto Fleet.pdf
SBRPCA Quote.pdf

APPROVED:



_____
Clint Osorio, City Manager

City of Gardena
City Council Meeting

Agenda Item No.:
Department: Police
Meeting Date: December 12, 2023

AGENDA STAFF REPORT

AGENDA TITLE: AUTHORIZATION TO PURCHASE SEVEN (7) PATROL VEHICLES FROM NATIONAL AUTO FLEET GROUP IN THE AMOUNT OF $367.103.89 AND EXPEND BUILD-OUT COSTS IN THE AMOUNT OF $199,126.69.

RECOMMENDATION:

Staff respectfully recommends that Council authorize the Police Department to purchase seven (7) new 2024 Dodge Durango Pursuit AWD vehicles from National Auto Fleet Group at a total cost of $367,103.89, including a 10.25% state sales tax and an $8.75 tire tax per vehicle. Staff also requests Council authorization to expend the vehicle buildouts in the total amount of $199,126.69.

BACKGROUND:

In 2014, the Police Department transitioned our Police fleet to Police Interceptors. Unfortunately, Ford will not have any Police Interceptors available in 2024, due to their strike and backlog of vehicles owed to government contracts. The only Police vehicles available to order for this fiscal budget is the Dodge Durango Pursuit. The Dodge is the closest in vehicle similarity as the Ford Explorer.

The ongoing replacement of capital equipment is necessary to maintain a fleet inventory that is safe, efficient, and reliable. This purchase of seven new patrol vehicles will replace the older vehicles that have reached the end of their useful service life due to age, mileage, and general wear and tear. Currently, the Police Department has thirty-one (31) black-and-white patrol vehicles in the fleet, with a plan to replace five units per year through the Vehicle Replacement Fund. This year we are requesting seven (7) vehicles due to the scarcity of police vehicles in the market, the need to replace older vehicles, and two (2) vehicles damaged beyond repair. The two (2) totaled vehicles (P11 and GT1) were damaged, beyond repair, due to the actions of "at fault" suspects in Police related incidents.

Police Department staff obtained a quote via National Auto Fleet Group for seven (7) new 2024 Dodge Durango Pursuit AWD vehicles. The total cost of each vehicle, including state sales tax and tire tax, is $52,443.41 for each patrol unit. These vehicles are available

under the Sourcewell Master Vehicle Contract #09-1521-NAF, formerly known as the National Joint Powers Alliance (NJPA) contract. The seven (7) new Dodge Durango Pursuit vehicles will replace seven (7) older Police Interceptors that are currently in service or have been damaged beyond repair.

South Bay Regional Public Communications Authority is our local vendor for vehicle buildouts. The quoted price of an entirely new vehicle setup is $28,446.67 per patrol vehicle, resulting in a total build-out cost of $199,126.69.

Over the years, SBRPCA staff have worked to find the most reasonable prices on equipment that we purchase through them. However, due to us switching to Dodge Durango vehicles this year, due to the unavailability of Ford vehicles for the 2024 year, we will have to purchase all new parts for the build-outs. The price per vehicle build-out is listed below.

P-5	$28,446.67
P-7	$28,446.67
P-9	$28,446.67
P-11	$28,446.67
P-12	$28,446.67
P-20	$28,446.67
GT1	$28,446.67
Total:	**$199,126.69**

The City can take advantage of the Sourcewell Master Vehicle Contract and purchase the Dodge Durango Pursuit at a discount. MSRP for the vehicles is $49,825.00 each or a total cost of $348,775.00 for seven (7). Because of the Sourcewell Master Vehicle Contract, each of the police units will cost $47,265.00 or a total of $330,855.00, a savings of $17,920.00.

The seven (7) Ford Police Interceptor vehicles that are being replaced will have their police-related equipment removed and then sent to auction. Some of the recycled equipment is not reusable in the new patrol vehicles, as they have become incompatible with the length and width of the new police models.

CONCLUSION:

Staff respectfully recommends that the City Council approve the purchase and build-out costs for seven (7) new 2024 Dodge Durango Pursuit AWD vehicles.

Submitted by: _____ **Date:** 12/04/2023
Michael Saffell, Chief of Police

National Auto Fleet Group

A Division of Chevrolet of Watsonville

490 Auto Center Drive, Watsonville, CA 95076

(855) 289-6572 • (855) BUY-NJPA • (831) 480-8497 Fax

Fleet@NationalAutoFleetGroup.com

November 3, 2023

Lieutenant Patrick Goodpaster
City of Gardena Police Department
1718 West 162nd Street
Gardena, Ca 90247
Delivery Via Email

Dear Lieutenant Goodpaster,

In response to your inquiry, we are pleased to submit the following for your consideration:

National Auto Fleet Group will sell, service and deliver at Gardena, new/unused 2024 Dodge Durango Pursuit V-8 AWD Patrol responding to your requirement with the attached specifications for $ 47,265.00 plus State Sales Tax, and $8.75 tire tax (non-taxable). These vehicles are available under the Sourcewell (Formerly Known as NJPA) master vehicle contract# 120716-NAF. Unit to be Black and White.

	One unit MSRP	Selling Price	Total Savings	Extended units (7)	Total Savings
2024 Dodge Durango Pursuit V-8 AWD	49,825.00	47,265.00	5.14%	330,855.00	17,920.00
Black and White Paint		1,350.00		9,450.00	
Sub Total		47,265.00		330,855.00	
Sales Tax		4,844.66		33,912.64	
Transportation		325.00		2,275.00	
Tire Tax		8.75		61.25	
Total		52,443.41		367,103.89	

Terms are net 30 days.
Delivery 120-180 Days ARO
National Auto Fleet Group welcomes the opportunity to assist you in your vehicle requirements.

Kevin Buzzard
National Law Enforcement Sales Manager
National Auto Fleet Group
626-656-8431 O / 714-2641867 C

CHROMEDATA
An Autodata Solutions Brand

National Auto Fleet Group
Kevin Buzzard | 626-457-5590 OFC | Buzzard5150@gmail.com

Vehicle: [Fleet] 2024 Dodge Durango (WDEE75) Pursuit AWD

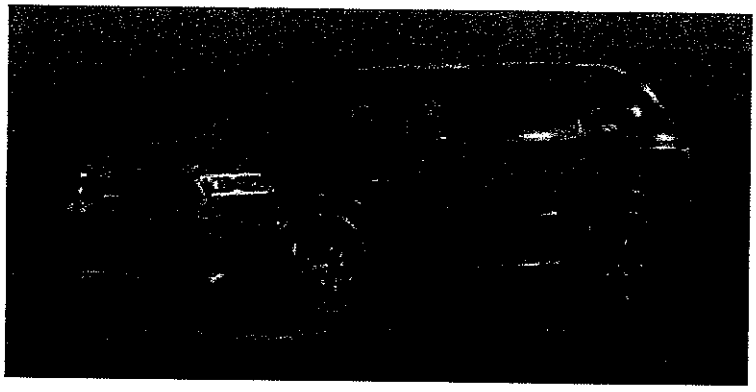

National Auto Fleet Group

Prepared By:

Kevin Buzzard
National Auto Fleet Group
626-457-5590 OFC
Buzzard5150@gmail.com

Prices, specifications, and availability are subject to change without notice, and do not include certain fees, taxes and charges that may be required by law or vary by manufacturer or region. Performance figures are guidelines only, and actual performance may vary. Photos may not represent actual vehicles or exact configurations. Content based on report preparer's input is subject to the accuracy of the input provided. Data Version: 20861, Data updated Nov 2, 2023 6:39:00 PM PDT

Vehicle: [Fleet] 2024 Dodge Durango (WDEE75) Pursuit AWD (Complete)

Selected Model and Options

MODEL

CODE	MODEL
WDEE75	2024 Dodge Durango Pursuit AWD

COLORS

CODE	DESCRIPTION
PXJ	DB Black Clearcoat

ENGINE

CODE	DESCRIPTION
EZH	Engine: 5.7L V8 HEMI MDS VVT -inc: 3.09 Rear Axle Ratio, Dual Rear Exhaust w/Bright Tips, 230MM Rear Axle, 800 Amp Maintenance Free Battery, 2 Speed On Demand Transfer Case, GVWR: 7,100 lbs

TRANSMISSION

CODE	DESCRIPTION
DFD	Transmission: 8-Speed Automatic (8HP70)

CPOS PKG

CODE	DESCRIPTION
22Z	Quick Order Package 22Z -inc: Engine: 5.7L V8 HEMI MDS VVT, Transmission: 8-Speed Automatic (8HP70)

AXLE RATIO

CODE	DESCRIPTION
DPM	3.09 Rear Axle Ratio

WHEELS

CODE	DESCRIPTION
WBN	Wheels: 18" x 8.0" Black Steel (STD)

PRIMARY PAINT

CODE	DESCRIPTION
PXJ	DB Black Clearcoat

SEAT TYPE

CODE	DESCRIPTION
C5X9	Black, Cloth Bucket Seats w/Shift Insert -inc: cloth rear seat

Prices, specifications, and availability are subject to change without notice, and do not include certain fees, taxes and charges that may be required by law or vary by manufacturer or region. Performance figures are guidelines only, and actual performance may vary. Photos may not represent actual vehicles or exact configurations. Content based on report preparer's input is subject to the accuracy of the input provided. Data Version: 20861, Data updated Nov 2, 2023 6:39:00 PM PDT

Vehicle: [Fleet] 2024 Dodge Durango (WDEE75) Pursuit AWD (✔ Complete)

GVWR

CODE	DESCRIPTION
Z6J	GVWR: 7,100 lbs

ADDITIONAL EQUIPMENT - PACKAGE

CODE	DESCRIPTION
ADL	Skid Plate Group -inc: Transfer Case Skid Plate Shield, Front Suspension Skid Plate, Fuel Tank Skid Plate Shield, Underbody Skid Plate

ADDITIONAL EQUIPMENT - EXTERIOR

CODE	DESCRIPTION
LNF	Black Left LED Spot Lamp
LNA	Black Right LED Spot Lamp

ADDITIONAL EQUIPMENT - INTERIOR

CODE	DESCRIPTION
CW6	Deactivate Rear Doors/Windows
GXF	Entire Fleet Alike Key (FREQ 1) -inc: 4 additional key alike fobs / 8 total
	Options Total

Prices, specifications, and availability are subject to change without notice, and do not include certain fees, taxes and charges that may be required by law or vary by manufacturer or region. Performance figures are guidelines only, and actual performance may vary. Photos may not represent actual vehicles or exact configurations. Content based on report preparer's input is subject to the accuracy of the input provided. Data Version: 20861, Data updated Nov 2, 2023 6:39:00 PM PDT

Vehicle: [Fleet] 2024 Dodge Durango (WDEE75) Pursuit AWD (✔ Complete)

Standard Equipment

Mechanical

Engine: 3.6L V6 24V VVT UPG I w/ESS (STD)

Transmission: 8-Speed Automatic (850RE) (STD)

3.45 Rear Axle Ratio (STD)

GVWR: 6,500 lbs (STD)

50 State Emissions

Transmission w/Sequential Shift Control

Full-Time All-Wheel

Engine Oil Cooler

650CCA Maintenance-Free Battery w/Run Down Protection

220 Amp Alternator

Trailer Wiring Harness

Class IV Towing Equipment -inc: Hitch and Trailer Sway Control

Police/Fire

1650# Maximum Payload

Nivomat Suspension

Front And Rear Anti-Roll Bars

Gas-Pressurized Front Shock Absorbers and Nivomat Brand Name Rear Shock Absorbers

HD Suspension

Electric Power-Assist Speed-Sensing Steering

24.6 Gal. Fuel Tank

Single Stainless Steel Exhaust

Permanent Locking Hubs

Short And Long Arm Front Suspension w/Coil Springs

Multi-Link Rear Suspension w/Coil Springs

4-Wheel Disc Brakes w/4-Wheel ABS, Front And Rear Vented Discs, Brake Assist and Hill Hold Control

Exterior

Wheels: 18" x 8.0" Black Steel (STD)

Tires: 255/60R18 On/Off Road

Wheels w/Chrome Hub Covers

Steel Spare Wheel

Compact Spare Tire Stored Underbody w/Crankdown

Prices, specifications, and availability are subject to change without notice, and do not include certain fees, taxes and charges that may be required by law or vary by manufacturer or region. Performance figures are guidelines only, and actual performance may vary. Photos may not represent actual vehicles or exact configurations. Content based on report preparer's input is subject to the accuracy of the input provided. Data Version: 20861, Data updated Nov 2, 2023 6:39:00 PM PDT

Vehicle: [Fleet] 2024 Dodge Durango (WDEE75) Pursuit AWD (✓ Complete)

Exterior

Clearcoat Paint

Body-Colored Front Bumper w/Colored Rub Strip/Fascia Accent

Body-Colored Rear Step Bumper w/Colored Rub Strip/Fascia Accent

Black Side Windows Trim

Body-Colored Door Handles

Chrome Bodyside Insert and Colored Wheel Well Trim

Black Power Heated Side Mirrors w/Manual Folding

Fixed Rear Window w/Fixed Interval Wiper and Defroster

Deep Tinted Glass

Speed Sensitive Variable Intermittent Wipers

Galvanized Steel/Aluminum Panels

Lip Spoiler

Black Grille

Liftgate Rear Cargo Access

Tailgate/Rear Door Lock Included w/Power Door Locks

Perimeter/Approach Lights

LED Brakelights

Auto On/Off Projector Beam Led Low/High Beam Daytime Running Headlamps w/Delay-Off

Laminated Glass

Entertainment

Radio w/Seek-Scan, Clock, Speed Compensated Volume Control, Aux Audio Input Jack, Steering Wheel Controls and Radio Data System

Radio: Uconnect 4 w/8.4" Display

Streaming Audio

6 Speakers

GPS Antenna Input

Integrated Center Stack Radio

Integrated Voice Command w/Bluetooth

2 LCD Monitors In The Front

Interior

Front Seats w/Power 4-Way Driver Lumbar

12-Way Power Driver Seat -inc: Power Recline, Height Adjustment, Fore/Aft Movement, Cushion Tilt and Power 4-Way Lumbar Support

Prices, specifications, and availability are subject to change without notice, and do not include certain fees, taxes and charges that may be required by law or vary by manufacturer or region. Performance figures are guidelines only, and actual performance may vary. Photos may not represent actual vehicles or exact configurations. Content based on report preparer's input is subject to the accuracy of the input provided. Data Version: 20861, Data updated Nov 2, 2023 6:39:00 PM PDT

Vehicle: [Fleet] 2024 Dodge Durango (WDEE75) Pursuit AWD (Complete)

Interior

4-Way Passenger Seat -inc: Manual Recline, Fore/Aft Movement and Fold Flat

60-40 Folding Split-Bench Front Facing Fold Forward Seatback Rear Seat

Manual Tilt/Telescoping Steering Column

Gauges -inc: Speedometer, Odometer, Voltmeter, Oil Pressure, Engine Coolant Temp, Tachometer, Oil Temperature, Transmission Fluid Temp, Engine Hour Meter, Trip Odometer and Trip Computer

Power Rear Windows and Fixed 3rd Row Windows

Leather Steering Wheel

Front Cupholder

Rear Cupholder

Compass

Proximity Key For Doors And Push Button Start

Valet Function

Remote Keyless Entry w/Integrated Key Transmitter, 2 Door Curb/Courtesy, Illuminated Entry and Panic Button

Cruise Control w/Steering Wheel Controls

Voice Activated Dual Zone Front Automatic Air Conditioning

Rear HVAC w/Separate Controls

HVAC -inc: Auxiliary Rear Heater, Headliner/Pillar Ducts and Console Ducts

Illuminated Locking Glove Box

Driver Foot Rest

Interior Trim -inc: Leatherette/Metal-Look Instrument Panel Insert, Metal-Look Door Panel Insert and Chrome Interior Accents

Full Cloth Headliner

Cloth Bucket Seats w/Shift Insert -inc: cloth rear seat

Day-Night Auto-Dimming Rearview Mirror

Driver And Passenger Visor Vanity Mirrors

Partial Floor Console w/Covered Storage, Mini Overhead Console w/Storage and 3 12V DC Power Outlets

Front And Rear Map Lights

Fade-To-Off Interior Lighting

Carpet Floor Trim

Full Vinyl/Rubber Floor Covering

Cargo Area Concealed Storage

Cargo Space Lights

FOB Controls -inc: Cargo Access and Windows

Prices, specifications, and availability are subject to change without notice, and do not include certain fees, taxes and charges that may be required by law or vary by manufacturer or region. Performance figures are guidelines only, and actual performance may vary. Photos may not represent actual vehicles or exact configurations. Content based on report preparer's input is subject to the accuracy of the input provided. Data Version: 20861, Data updated Nov 2, 2023 6:39:00 PM PDT

Vehicle: [Fleet] 2024 Dodge Durango (WDEE75) Pursuit AWD (✔ Complete)

Interior	
	Google Android Auto
	USB Host Flip
	Apple CarPlay
	Driver / Passenger And Rear Door Bins
	Power 1st Row Windows w/Driver And Passenger 1-Touch Up/Down
	Delayed Accessory Power
	Power Door Locks w/Autolock Feature
	Driver Information Center
	Redundant Digital Speedometer
	Trip Computer
	Outside Temp Gauge
	Digital/Analog Appearance
	Front Center Armrest w/Storage and Rear Center Armrest
	#7 Seat Foam Cushion
	Manual w/Tilt Front Head Restraints and Fixed Rear Head Restraints
	Sentry Key Immobilizer
	Air Filtration
	3 12V DC Power Outlets
Safety-Mechanical	
	Electronic Stability Control (ESC) And Roll Stability Control (RSC)
	ABS And Driveline Traction Control
Safety-Exterior	
	Side Impact Beams
Safety-Interior	
	Dual Stage Driver And Passenger Seat-Mounted Side Airbags
	Blind Spot w/Trailer Detection Blind Spot
	Collision Mitigation-Rear
	ParkSense with Stop Rear Parking Sensors
	Tire Specific Low Tire Pressure Warning
	Dual Stage Driver And Passenger Front Airbags
	Curtain 1st, 2nd And 3rd Row Airbags
	Airbag Occupancy Sensor

Prices, specifications, and availability are subject to change without notice, and do not include certain fees, taxes and charges that may be required by law or vary by manufacturer or region. Performance figures are guidelines only, and actual performance may vary. Photos may not represent actual vehicles or exact configurations. Content based on report preparer's input is subject to the accuracy of the input provided. Data Version: 20861, Data updated Nov 2, 2023 6:39:00 PM PDT

Vehicle: [Fleet] 2024 Dodge Durango (WDEE75) Pursuit AWD (Complete)

Safety-Interior

Driver Knee Airbag

Rear Child Safety Locks

Outboard Front Lap And Shoulder Safety Belts -inc: Rear Center 3 Point, Height Adjusters and Pretensioners

ParkView Back-Up Camera

Prices, specifications, and availability are subject to change without notice, and do not include certain fees, taxes and charges that may be required by law or vary by manufacturer or region. Performance figures are guidelines only, and actual performance may vary. Photos may not represent actual vehicles or exact configurations. Content based on report preparer's input is subject to the accuracy of the input provided. Data Version: 20861, Data updated Nov 2, 2023 6:39:00 PM PDT

National Auto Fleet Group
Kevin Buzzard | 626-457-5590 OFC | Buzzard5150@gmail.com

Vehicle: [Fleet] 2024 Dodge Durango (WDEE75) Pursuit AWD (✔ Complete)

Window Sticker

SUMMARY

[Fleet] 2024 Dodge Durango (WDEE75) Pursuit AWD — MSRP:$43,075.00

Interior:Black, Cloth Bucket Seats w/Shift Insert

Exterior 1:DB Black Clearcoat

Exterior 2:No color has been selected.

Engine: 5.7L V8 HEMI MDS VVT

Transmission: 8-Speed Automatic (8HP70)

OPTIONS

CODE	MODEL		MSRP
WDEE75	[Fleet] 2024 Dodge Durango (WDEE75) Pursuit AWD		$43,075.00
	OPTIONS		
22Z	Quick Order Package 22Z		$0.00
ADL	Skid Plate Group		$350.00
C5X9	Black, Cloth Bucket Seats w/Shift Insert		$0.00
CW6	Deactivate Rear Doors/Windows		$90.00
DFD	Transmission: 8-Speed Automatic (8HP70)		$0.00
DPM	3.09 Rear Axle Ratio	Inc.	
EZH	Engine: 5.7L V8 HEMI MDS VVT		$3,115.00
GXF	Entire Fleet Alike Key (FREQ 1)		$350.00
LNA	Black Right LED Spot Lamp		$610.00
LNF	Black Left LED Spot Lamp		$640.00
PXJ	DB Black Clearcoat		$0.00
WBN	Wheels: 18" x 8.0" Black Steel		$0.00
Z6J	GVWR: 7,100 lbs	Inc.	
	SUBTOTAL		**$48,230.00**
	Adjustments Total		$0.00
	Destination Charge		$1,595.00
	TOTAL PRICE		**$49,825.00**

FUEL ECONOMY

Est City:14 (2023) MPG

Est Highway:22 (2023) MPG

Prices, specifications, and availability are subject to change without notice, and do not include certain fees, taxes and charges that may be required by law or vary by manufacturer or region. Performance figures are guidelines only, and actual performance may vary. Photos may not represent actual vehicles or exact configurations. Content based on report preparer's input is subject to the accuracy of the input provided. Data Version: 20861, Data updated Nov 2, 2023 6:39:00 PM PDT

Vehicle: [Fleet] 2024 Dodge Durango (WDEE75) Pursuit AWD (✔ Complete)

Est Highway Cruising Range:541.20 mi

Prices, specifications, and availability are subject to change without notice, and do not include certain fees, taxes and charges that may be required by law or vary by manufacturer or region. Performance figures are guidelines only, and actual performance may vary. Photos may not represent actual vehicles or exact configurations. Content based on report preparer's input is subject to the accuracy of the input provided. Data Version: 20861, Data updated Nov 2, 2023 6:39:00 PM PDT

SBRPCA
4440 WEST BROADWAY HAWTHORNE CA,90250
310-973-1802 FAX: 310-978-0892

QUOTE

DATE	QUOTE #	CUST #
10/31/2023	0000002754	0000011

CUSTOMER

City Of Gardena
Attn: Accounts Payable
1700 W. 162nd Street
Gardena CA 90247

SHIP TO:

Gardena Police Dept
Attn: Gina Ayers
1718 W. 162nd Street
Gardena CA 90247

P.O. NUMBER	TERMS	JOB OR UNIT #
	NET 30	

QUAN		DESCRIPTION	PRICE EACH	AMOUNT
1.00	VALR51J-167590	2023 Valor - 51 FSJoin Lightbars	2,310.00	2,310.00
1.00	HKB-FPIU20	Hook required with hook-on mount, 44-, 45-, 46-, 51-, 53-inch bars		
1.00	PF200R	Federal Signal Pathfinder Remote Head Siren / Light Controller, 100/200 watt, OBD integration capability, integrated Rumbler capability, and integrated dual-tone capability	822.00	822.00
1.00	RUMBLER-3	INTERSECTION CLEARING SYSTEM	617.40	617.40
1.00	RB-DUR19	Mounting Instructions for a Rumbler Speaker in a 2019 Dodge Durang	35.70	35.70
2.00	ES100C	SIREN SPEAKER	197.40	394.80
2.00	ESB-U	UNIVERSAL SIREN BKT FOR ES100C	25.20	50.40
2.00	416900-RB	Corner LED Dual Color Corner LED with in-line flasher Red/Blue	54.60	109.20
14.00	MPS63U-RBW	18-LED light head, Red/Blue/White	102.90	1,440.60
10.00	MPSM6-LB	MPS 600 SERIES L BRACKET	9.45	94.50
1.00	FHL-TAIL	TAIL LIGHT FLASHER INTERCEPTOR UTILTY	63.00	63.00
2.00	416900-BW	Corner LED Dual Color Corner LED with in-line flasher, Blue/White	54.60	109.20
1.00	MPS123U-RBA	MICROPULSE ULTRA 12, TRI-COLOR, SURFACE MOUNT, 12/24 VDC, CLEAR LENS	123.00	123.00
1.00	OBDCABLE25-2	OBDCABLE25-2-25-ft OBDII interface cable,		
1.00	C-VS-1500-DUR-2	Vehicle-Specific 15" Console for 2021-2023 Dodge Durango Retail and SSV	493.29	493.29
1.00	C-DMM-3124	Heavy-Duty Dash Mount for 2021-2023 Dodge Durango	488.25	488.25
1.00	DS-GTC-902	Docking Station and LPS-140 (120W Getac Vehicle Power Supply with LPS-208) for Getac K120 Tablet	818.11	818.11
1.00	CUP2-1001	Self-Adjusting Double Cup Holder	42.01	42.01
1.00	C-AP-0325	3 INCH INTERNAL POCKET HAVIS CONSOLE	32.91	32.91
1.00	PKG-MD-ARM-06	PKG,ACTADP,ACSY,VSX,LD,SWGARM,9"l,	204.53	204.53
1.00	PKG-TTP-INUT-1	Premium Package – Raised Fold-Up Equipment Tray & Cargo Plate with 200 lbs Lift Struts	1,310.43	1,310.43
1.00	C-EB30-FSR-1P	1-Piece Equipment Mounting Bracket, 3" Mounting Space, Fits Federal Signal Pathfinder PF200R switch panel remote	20.03	20.03
1.00	C-EB25-XTL-1P	1-Piece Equipment Mounting Bracket, 2.5" Mounting Space, Fits Motorola XTL 2500, XTL5000-05, APX 7500	30.87	30.87
1.00	C-FP-25	Filler plate 2.5 inch	7.64	7.64
1.00	C-FP-1.0	Filler plate 1inch	7.63	7.63
1.00	C-FP-.5	1/2 inch faceplate	7.64	7.64
1.00	GK1028SSCA	D T-RAIL MOUNT NO LOCKS MUST PROVIDE VEHICLE INFORMATION	131.56	131.56
1.00	GK10261LSSCA	Single T-Rail,Large Lock (AR-15 Only)	227.12	227.12

SBRPCA
4440 WEST BROADWAY HAWTHORNE CA,90250
310-973-1802 FAX: 310-978-0892

QUOTE

DATE	QUOTE #	CUST #
10/31/2023	0000002754	0000011

CUSTOMER

City Of Gardena
Attn: Accounts Payable
1700 W. 162nd Street
Gardena CA 90247

SHIP TO:

Gardena Police Dept
Attn: Gina Ayers
1718 W. 162nd Street
Gardena CA 90247

P.O. NUMBER	TERMS	JOB OR UNIT #
	NET 30	

QUAN		DESCRIPTION	PRICE EACH	AMOUNT
2.00	PG3969	ADJUSTABLE GUNLOCK TIMER	32.33	64.66
1.00	TK2392DUR11	CARGO DUAL DRAWER DECK - D2K - P1K SIDE BY SIDE DRAWERS - DRIVER 2/3 PASSENGER 1/3 - T-HANDLE KEY LOCKS	1,200.36	1,200.36
1.00	36-4075	Westin 2023+ Dodge Durango push bumper	338.25	338.25
1.00	36-4075PB	Westin 2023+ Dodge Durango Pit Bar	353.63	353.63
1.00	36-6005W2	WESTIN 2020 FORD IU, Dodge Durango WHELEN 2 LIGHT CHANEL	31.45	31.45
1.00	35-17075	2023+ DEFENDER PRISONER SEAT WITH READY BUCKLE SEAT BELT SYSTEM	886.17	886.17
1.00	35-10075	2023+ Dodge Durango DEFENDER FRONT PARTITION	993.80	993.80
1.00	35-12075	2023+ Dodge Durango DEFENDER REAR PARTITION	464.75	464.75
2.00	20.1850 CLEAR	LINEAR STROBE CLEAR LENS	175.27	350.54
1.00	MXDD19I2J	2023 Dodge Durango Mirror-Beam Red/Blue Lightheads	272.16	272.16
2.00	MBI2J	MIRROR-BEAM MT ION DUO R/B	15.75	31.50
4.00	I3JC	ION TRIO ION R/B W/ WHT OVERRIDE	124.74	498.96
1.00	PE 215	STROBE PRE-EMPTION SUPPLY (OPTICOM)	433.80	433.80
1.00	MB05-19005GB-	Cradlepoint R1900-5GB - wireless router - WWAN - LTE, 802.11a/b/g/n/ac/ax,	2,934.75	2,934.75
1.00	LG-IN2447	11-in-1 5G Dome Blk Ftd Ext Cbls	614.25	614.25
1.00	AP-MMF-CCWW	two high gain cellular/LTE/MIMO antennas which support LTE Band 14 for FirstNet, three high gain dual band Wi-Fi antennas, and a GNSS antenna inside a single robust and compact housing	341.25	341.25
1.00	IK-TR-911-RED	Full Travel Keyboard with Attachment Versatility		
1.00	DEFAULT 4030	Sbrpca wire harnes	387.65	387.65
1.00	390-0042-0	KUSSMAUL POWER CENTER DISTRIBUTION	318.00	318.00
1.00	MISC PARTS	WIRE, LOOM, HARDWARE	600.00	600.00
1.00		SHIPPING COSTS	600.00	600.00
1.00	KP87S4VAXQXX	GETAC:K120G2-R i7-1165G7	4,150.00	4,150.00

SUBTOTAL	**$25,857.75**
TAX	**$2,588.92**
TOTAL	**$28,446.67**

City of Gardena

Gardena City Council Meeting

AGENDA REPORT SUMMARY

Agenda Item No. 16.A
Section: DEPARTMENTAL ITEMS - PUBLIC WORKS
Meeting Date: December 12, 2023

TO: THE HONORABLE MAYOR AND MEMBERS OF THE GARDENA CITY COUNCIL

AGENDA TITLE: Award Construction Contract for the Gardena Community Aquatic and Senior Center Project, JN 978, to New Dynasty Construction Company, in the amount of $16,870,644. Additionally Approve the Project Plans & Specifications, $34,675 Additional Services Agreement with RJM Design Group, $195,340 Additional Services Agreement with Griffin Structures, 10% of Project Contingency, and Budget Appropriation of $6,206,867 from General Fund Reserve.

COUNCIL ACTION REQUIRED:

Staff Recommendations:

- **Award Construction Contract**
- **Approve Project Plans & Specifications**
- **Approve Additional Design Services**
- **Approve Additional Construction Administration Services**
- **Approve Project Contingency**
- **Approve Additional Budget Appropriation**

RECOMMENDATION AND STAFF SUMMARY:

In March 2022, the City Council approved the conceptual design and to proceed with the final design and construction document phase for the Gardena Community Aquatic and Senior Center Project. All approved conceptual design elements have been retained, and additionally incorporated the photovoltaic infrastructure, Audio & Visual (A&V), and key card security systems into the construction documents.

The proposed Senior Center, spanning approximately 12,000 square feet on two levels, incorporates the programs identified in the grant application, community outreach, and the conceptual design development phase. The Senior Center will feature a reception/lobby, restroom, conference room, office, breakroom, storage room, and kitchen/pantry. Additionally, shared use program rooms, a study lounge, balcony, custodial and IT/electrical rooms will be available. The building will be equipped with fiber optic communication capability, an audiovisual system, security key cards, and photovoltaic system.

The new Aquatic Center will encompass 7,020 square feet and will include a 25-yard, 8-lane, ¾-meter diving stand, and pool exercise/leisure area. The Aquatic Center will feature a main entrance, outdoor showers, bleacher seating, seat walls, shade structures, a pool

equipment/mechanical room, and pool storage. The outdoor courtyard will accommodate exercise stations, ADA accessible drinking fountain, picnic tables, site lighting and furnishings, tree and shrub planting, irrigation, hardscape paving, walls, barbecue grill and lawn area, and ADA parking stalls, utility service lines and all other incidental elements.

In September 2021, the City Council selected the architectural firm RJM Design Group to develop design and construction documents for the project. Over the past 24 months, staff has been collaborating with RJM to prepare the construction documents, obtain all jurisdictional plan check approvals, complete the demolition, and relocate the franchise utility lines.
Initially, the prequalified contractor method was utilized, and bids were obtained on September 5, 2023, in the amount of $19,784,000 (Swinerton) and $21,487,701 (Morillo). The bids were approximately 40% higher than the Architect's estimate. Therefore, the City Council rejected all bids and the prequalified contractor list for the project and directed that the project be re-bid on the open market with modified requirements.

Subsequently, the Project Plans and Specifications have been modified to reduce the contractor's minimum requirements, amended to include all the Request for Information (RFI) and addenda responses from the previous bid process. Additionally, the photovoltaic, Audio/Visual/Telecommunication/Security scopes have been modified to be constructed per plan in-lieu of design and build in an effort to reduce the construction cost.

In October 2023, the revised Project Plans and Specifications were published as a bid request in CR Planwell, Gardena Valley News, and the City's website. The following two (2) bids were received on November 21, 2023:

1.	New Dynasty Construction Co., Tustin CA	$16,870,644
2.	Morillo Construction, Inc., Pasadena CA	$18,425,000

The New Dynasty Construction Company submitted the lowest responsive bid, $2,913,356 less than the previously rejected low bid in September 2023. The contractor holds a state contractor license and possesses verified successful construction experience in projects of a comparable nature. The general contractor was required to have a minimum of three (3) comparable project experience, each with a value of at least $5M. Two (2) of these projects specifically required construction of public-use aquatic centers and two-story buildings within the last 10 years.

Furthermore, the pool subcontractor was required to have a proven track record of a minimum of three (3) commercially designed municipal and/or public-use swimming pools within the last 10 years. Each of these pools must have incorporated a minimum size of 4,000 square feet of water surface area.

Established in 2011, New Dynasty Construction Co. is a general building and engineering

contractor with focus on a large and broad category across local, state, and federal infrastructure projects such as municipal buildings, education, health, recreation facilities and has completed 30 public projects.

The project is expected to commence construction in early March 2024 and is anticipated to be substantially complete by March 2025, pending inclement weather and material lead times. Staff respectfully recommends that the City Council award construction contract for the Gardena Community Aquatic and Senior Project, JN 978, to New Dynasty Construction, Company in the amount of $16,870,644 and additionally:

- Approve the plans and specifications.
- Approve $34,675 for RJM Design Group to compensate the amended scope of photovoltaic, A&V and key card security systems.
- Approve an additional $195,340 for construction administration services with Griffin Structures to amend the specialized deputy inspection services as required by the Community Development Department permits. These special inspection services include tasks such as concrete, shotcrete, masonry, structural steel welding, bolting at the fabrication plant, etc. The payments to be under Time-and-Materials (T&M) and Labor-Hour services as needed.
- Approve 10% of construction award amount, $1,690,000 to be utilized as a contingency for construction and/or consultant support services.
- Approve an additional budget appropriation of $6,206,867 from General Fund Reserve to complete the project.

FINANCIAL IMPACT/COST:

Sources of Funds:

Gardena Community Aquatic and Senior Center Project, JN 978-		
2021 Lease Revenue Bonds funded by Measure G	$7,700,000	
Prop 68	$5,976,221	
Federal Earmark (Site Furnishing & Operation Use Only)	$1,400,000	
Proposed Budget Appropriation -		
General Fund Reserve	$6,206,867	
TOTAL		$21,283,088

Estimated Expenditures:

Remaining Balance of Design Services Contract (RJM)	$86,443	
Additional Design Services by RJM	$34,675	
Edison/SCE Utility Relocation	$73,939	
Site Furnishing and Operation	$1,400,000	
Community Development Permit Fees	$100,000	
Remaining Balance of Constructability Review and		

Construction Admin Services (Griffin Structures)	$832,047	
Additional Construction Admin Services by Griffin Structures	$195,340	
Construction Contract Award	$16,870,644	
Project Contingency (10%)	$1,690,000	
TOTAL		$21,283,088

ATTACHMENTS:

JN 978 Aquatic & Senior Center CD Plans.pdf
JN 978 Aquatic & Senior Center Specifications.pdf
JN 978 - New Dynasty Construction Co Proposal. 11-21-2023.pdf
JN 978 Gardena Aquatic-Senior Ctr_Additional RJM Design Services.pdf
JN 978 Gardena Aquatic & Senior Center_Additional GS Services.pdf

APPROVED:



_____
Clint Osorio, City Manager

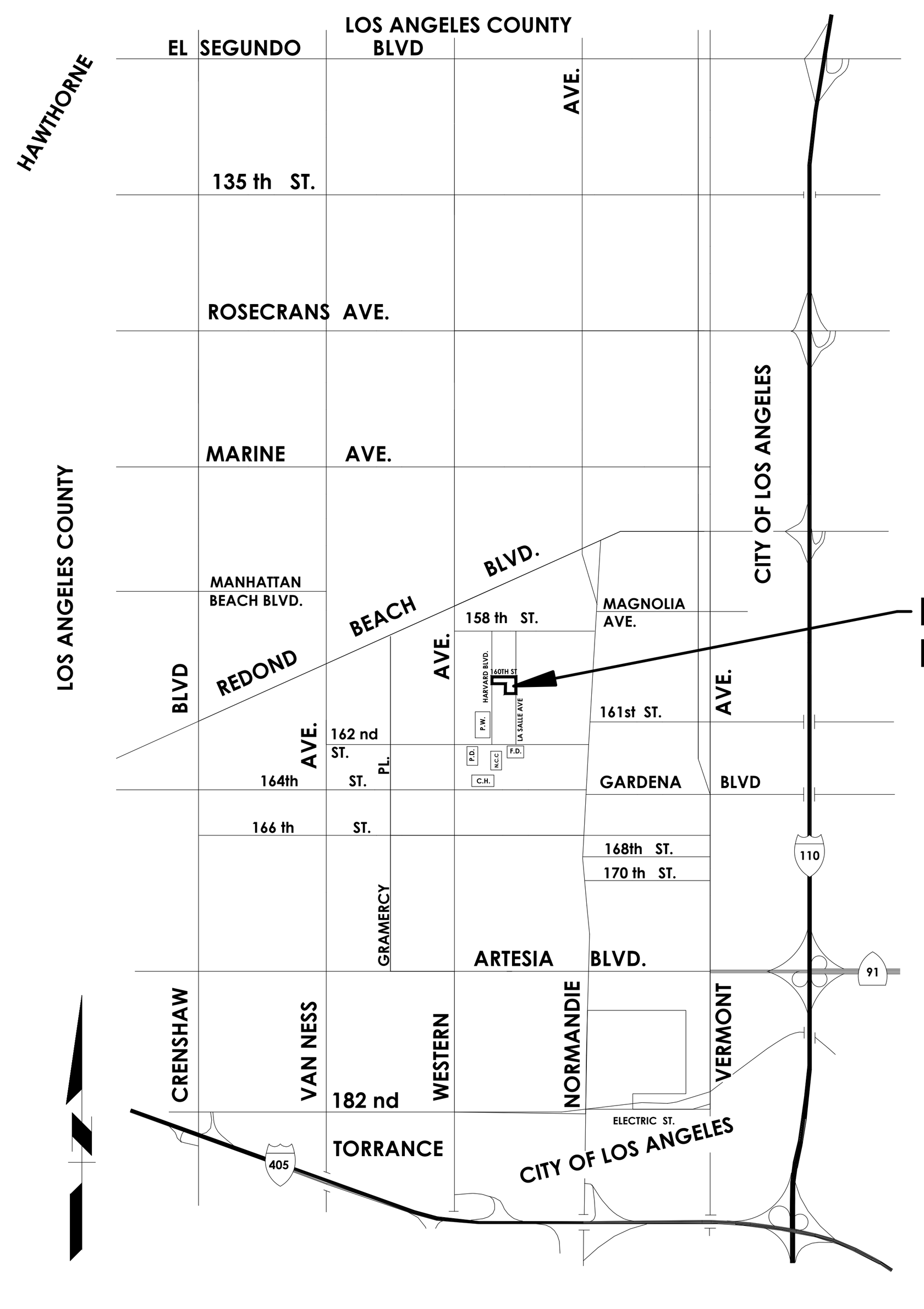

VICINITY MAP
N.T.S.

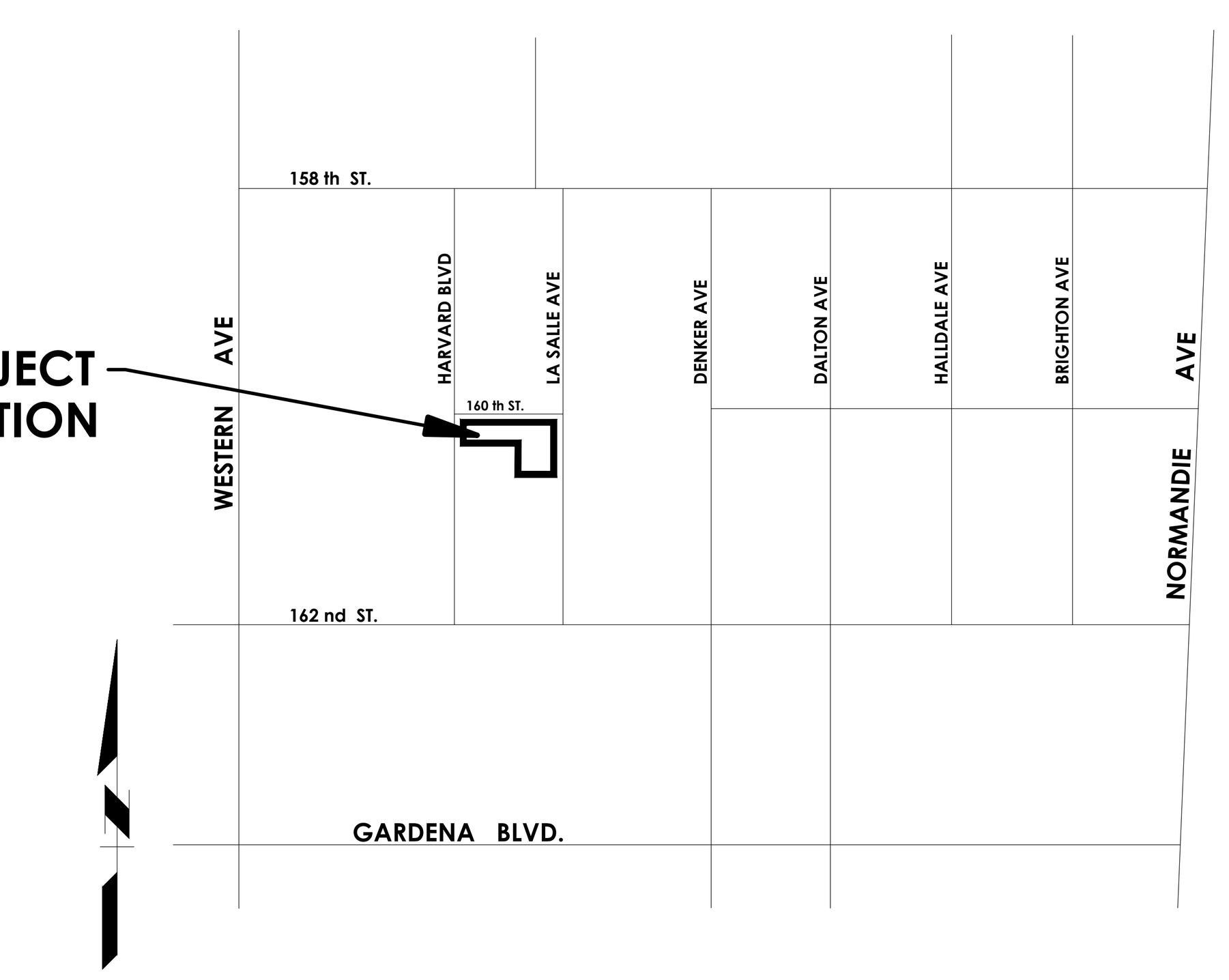

LOCATION MAP
N.T.S.

CITY OF GARDENA
FINAL CONSTRUCTION DOCUMENTS
FOR
GARDENA COMMUNITY AQUATICS AND SENIOR CENTER PROJECT
1654 W 160TH ST, GARDENA, CA 90247

JOB NUMBER - J.N. 978

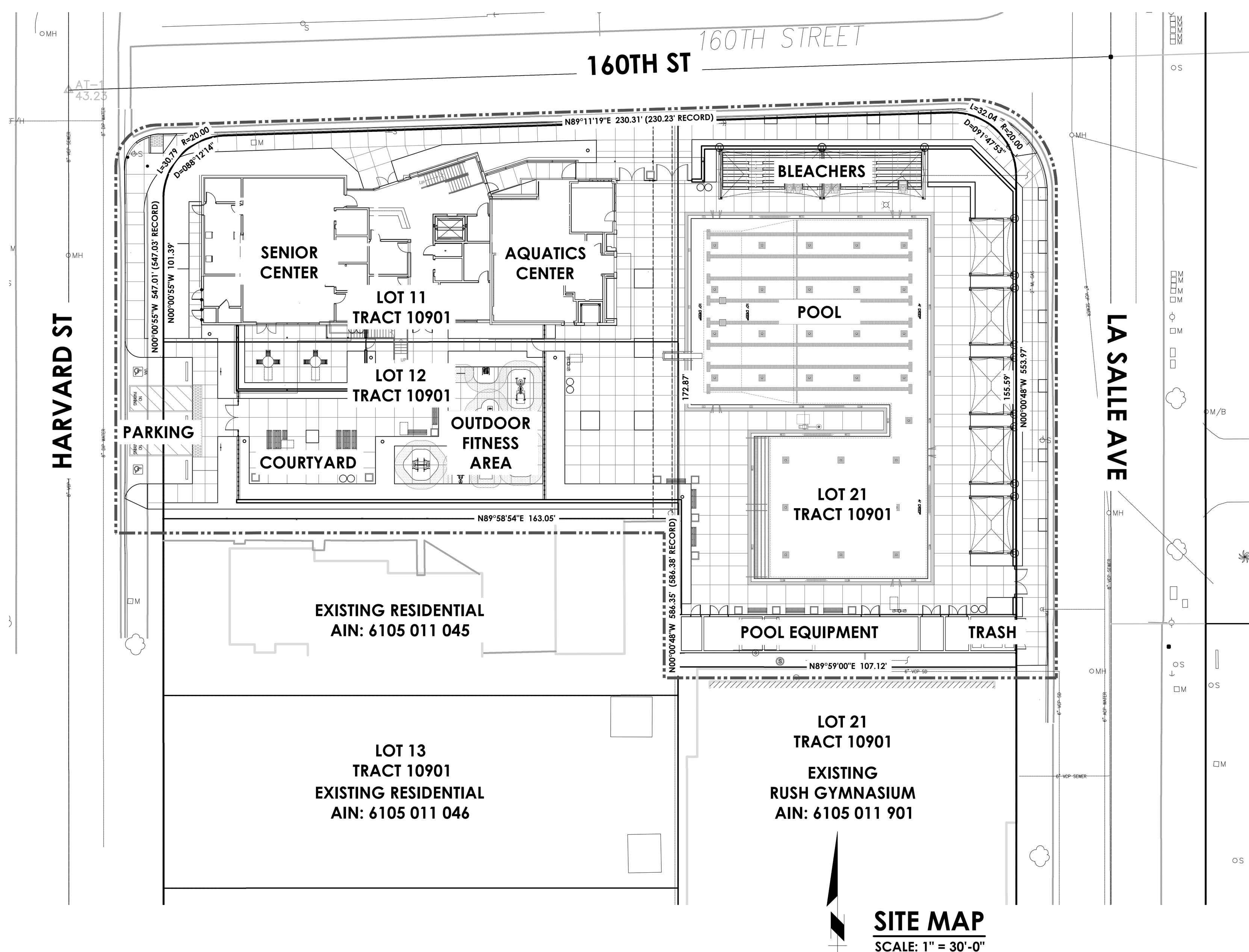

SITE MAP
SCALE: 1" = 30'-0"

SHEET INDEX

SHEET NO.		SHEET DESC.
1.	T-1.01	TITLE SHEET
2.	T-1.02	GENERAL NOTES
3.	T-1.03	SITE ACCESSIBILITY PLAN / CODE ANALYSIS
4.	T-1.04	ACCESSIBILITY GENERAL NOTES
CIVIL ENGINEERING		
5.	C-0.01	NOTE SHEET
6.	C-0.02	DETAIL SHEET
7.	C-0.03	DETAIL SHEET
8.	C-0.04	DETAIL SHEET
9.	D-1.01	DEMOLITION PLAN
10.	C-1.01	PRECISE GRADING PLAN
11.	C-2.01	WATER / SEWER PLAN
12.	C-3.01	EROSION CONTROL PLAN
13.	C-4.01	HORIZONTAL CONTROL / STRIPING PLAN
LANDSCAPE CONSTRUCTION		
14.	L-1.01	CONSTRUCTION PLAN
15.	L-1.02	CONSTRUCTION PLAN
16.	L-2.01	CONSTRUCTION DETAILS
17.	L-2.02	CONSTRUCTION DETAILS
18.	L-2.03	CONSTRUCTION DETAILS
19.	L-2.04	CONSTRUCTION DETAILS
20.	L-2.05	CONSTRUCTION DETAILS
21.	L-2.06	CONSTRUCTION DETAILS - FITNESS EQUIPMENT
22.	L-2.07	CONSTRUCTION DETAILS - BLEACHERS
23.	L-2.08	CONSTRUCTION DETAILS - BLEACHERS
24.	L-2.09	CONSTRUCTION DETAILS - BLEACHERS
25.	L-2.10	CONSTRUCTION DETAILS - SHADE STRUCTURES
26.	L-2.11	CONSTRUCTION DETAILS - SHADE STRUCTURES
27.	L-2.12	CONSTRUCTION DETAILS - SHADE STRUCTURES
28.	L-2.13	CONSTRUCTION DETAILS - SHADE STRUCTURES
29.	L-2.14	CONSTRUCTION DETAILS - SHADE STRUCTURES
30.	L-2.15	CONSTRUCTION DETAILS - SHADE STRUCTURES
31.	L-2.16	CONSTRUCTION DETAILS - SHADE STRUCTURES
32.	L-2.17	CONSTRUCTION DETAILS - SHADE STRUCTURES
IRRIGATION		
33.	L-3.01	IRRIGATION PLAN
34.	L-3.02	IRRIGATION PLAN
35.	L-4.01	IRRIGATION DETAILS
LANDSCAPE PLANTING		
36.	L-5.01	PLANTING PLAN
37.	L-5.02	PLANTING PLAN
38.	L-6.01	PLANTING DETAILS AND NOTES
ARCHITECTURE		
39.	GEN-1	PROJECT INFORMATION & SHEET INDEX
40.	GEN-2	CODE ANALYSIS & EXITING PLAN
41.	GEN-3	GENERAL NOTES
42.	GEN-4	PROJECT SIGNAGE
43.	GEN-5	ACCESSIBILITY DETAILS
44.	A1.0	SITE PLAN
45.	A1.1	FIRE MASTER PLAN
46.	A11.1	SLAB PLAN
47.	A11.2	FIRST FLOOR PLAN
48.	A11.3	SECOND FLOOR PLAN
49.	A11.4	ROOF PLAN
50.	A11.5	FIRST FLOOR RCP
51.	A11.6	SECOND FLOOR RCP
52.	A21.1	ELEVATIONS
53.	A31.1	BUILDING SECTIONS
54.	A32.1	WALL SECTIONS
55.	A32.2	WALL SECTIONS
56.	A32.3	WALL SECTIONS
57.	A34.1	ASSEMBLIES
58.	A34.2	ASSEMBLIES
59.	A40.1	POOL BUILDING PLANS, ELEVATIONS, AND SECTIONS
60.	A40.2	POOL BUILDING DETAILS
61.	A42.1	ENLARGED LOCKER ROOM PLANS AND ELEVATIONS
62.	A42.2	ENLARGED PLANS AND ELEVATIONS
63.	A43.1	INTERIOR ELEVATIONS
64.	A44.1	INTERIOR STAIR PLANS AND SECTIONS
65.	A44.2	EXTERIOR STAIR PLANS AND SECTIONS
66.	A44.3	TRELLIS PLANS AND SECTIONS
67.	A50.1	FIRST FLOOR INTERIOR FINISH SCHEDULE
68.	A50.2	SECOND FLOOR INTERIOR FINISH SCHEDULE
69.	A52.1	DOOR SCHEDULE
70.	A52.2	STOREFRONT ELEVATIONS
71.	A61.1	WALL TYPES
72.	A62.1	DETAILS WALL ASSEMBLIES
73.	A62.2	DETAILS CEILING
74.	A62.3	DETAILS CEILING
75.	A62.4	DETAILS ROOF
76.	A62.5	DETAILS ROOF
77.	A63.1	DETAILS DOOR
78.	A63.2	WINDOW AND WALL ASSEMBLY DETAILS
79.	A64.1	STAIR AND RAILING DETAILS
80.	A64.2	TRELLIS, FENCE, AND MISC. DETAILS
81.	A65.1	MISCELLANEOUS DETAILS
82.	A67.1	DETAILS CASEWORK & MISC.
83.	A67.2	TILE DETAILS
BUILDING STRUCTURAL		
84.	S-0.1	GENERAL NOTES
85.	S-0.2	GENERAL NOTES
86.	S-0.3	GENERAL NOTES
87.	S-1.1	TYPICAL DETAILS - REBAR & S.O.G.
88.	S-1.2	TYPICAL DETAILS - FOOTING & EXCAVATION
89.	S-1.3	TYPICAL DETAILS - FOOTING & EXCAVATION
90.	S-1.4	TYPICAL DETAILS - METAL STUD
91.	S-1.5	TYPICAL DETAILS - METAL STUD
92.	S-1.6	TYPICAL DETAILS - METAL STUD
93.	S-1.7	TYPICAL DETAILS - METAL STUD
94.	S-1.8	TYPICAL DETAILS - METAL DECK
95.	S-1.9	TYPICAL DETAILS - CMU
96.	S-1.10	TYPICAL DETAILS - STEEL
97.	S-1.11	TYPICAL DETAILS - STEEL
98.	S-1.12	TYPICAL DETAILS - STEEL
99.	S-1.13	TYPICAL DETAILS - MEP SUPPORT
100.	S-2.1	FOUNDATION PLAN
BUILDING STRUCTURAL (CONTINUED)		
101.	S-2.2	POOL BLDG FOUNDATION & ROOF FRAMING PLAN
102.	S-3.1	SECOND FLOOR FRAMING PLAN
103.	S-3.2	ROOF FRAMING PLAN
103A.	S-3.2A	SOLAR ROOF FRAMING PLAN
104.	S-4.1	FOUNDATION DETAILS
105.	S-5.1	FRAMING DETAILS
106.	S-5.2	FRAMING DETAILS
107.	S-5.3	STAIR DETAILS
108.	S-6.1	WALL ELEVATIONS
109.	S-6.2	WALL ELEVATIONS
MECHANICAL		
110.	M0.01	MECHANICAL LEGENDS, ABBREVIATIONS, & GENERAL NOTES
111.	M0.02	MECHANICAL TITLE 24
112.	M0.03	MECHANICAL TITLE 24
113.	M0.04	MECHANICAL TITLE 24
114.	M0.05	MECHANICAL TITLE 24
115.	M2.01	FIRST FLOOR MECHANICAL ZONING PLAN
116.	M2.02	SECOND FLOOR MECHANICAL ZONING PLAN
117.	M2.11	FIRST FLOOR MECHANICAL PLAN
118.	M2.12	SECOND FLOOR MECHANICAL PLAN
119.	M2.13	MECHANICAL ROOF PLAN
120.	M3.11	MECHANICAL PLAN - POOL BUILDING
121.	M5.01	MECHANICAL DETAILS
122.	M5.02	MECHANICAL DETAILS
123.	M5.03	MECHANICAL DETAILS
124.	M5.04	MECHANICAL DETAILS
125.	M6.01	MECHANICAL SCHEDULES
126.	M7.01	MECHANICAL CONTROL DIAGRAMS
PLUMBING		
127.	P0.01	PLUMBING LEGENDS, ABBREVIATIONS & GENERAL NOTES
128.	P1.11	PLUMBING SITE PLAN
129.	P2.11	FIRST FLOOR PLUMBING PLAN
130.	P2.12	SECOND FLOOR PLUMBING PLAN
131.	P2.13	PLUMBING ROOF PLAN
132.	P2.14	FIRST FLOOR PLUMBING PLAN - POOL EQUIPMENT
133.	P4.01	ENLARGED PLUMBING PLAN
134.	P4.02	ENLARGED PLUMBING PLAN
135.	P5.01	PLUMBING DETAILS
136.	P5.02	PLUMBING DETAILS
137.	P6.01	PLUMBING SCHEDULES
138.	P7.01	PLUMBING SCHEMATICS
139.	P8.01	PLUMBING WASTE & VENT RISER DIAGRAM
140.	P8.02	PLUMBING WATER RISER DIAGRAM
141.	P8.03	PLUMBING GAS RISER DIAGRAM
ELECTRICAL		
142.	E-0.01	SYMBOLS LIST AND GENERAL NOTES
143.	E-0.02	LIGHTING FIXTURE SCHEDULE
144.	E-0.02A	LIGHTING CONTROLS
145.	E-0.02B	LIGHTING FIXTURE CUT SHEETS
146.	E-0.02C	LIGHTING FIXTURE CUT SHEETS
147.	E-0.02D	LIGHTING FIXTURE CUT SHEETS
148.	E-0.03	SINGLE LINE DIAGRAM & DETAILS
149.	E-0.04	PANEL SCHEDULES
150.	E-0.05	TITLE 24 - INDOOR
151.	E-0.06	TITLE 24 - OUTDOOR
152.	E-1.01	SITE ELECTRICAL PLAN
153.	E-1.01A	SITE PHOTOMETRIC PLAN
154.	E-2.01	BUILDING LIGHTING PLANS
155.	E-2.01A	BUILDING EGRESS LIGHTING CALCULATIONS
156.	E-3.01	BUILDING POWER & SIGNAL PLANS
157.	E-3.02	ROOF ELECTRICAL PLAN
158.	E-3.03	POOL BUILDING LIGHTING, POWER & SIGNAL PLANS
159.	E-4.01	DETAILS AND ENLARGED ELECTRICAL PLANS
AQUATICS		
160.	SP1.1	SWIMMING POOL PLAN
161.	SP1.2	SWIMMING POOL SECTIONS
162.	SP2.1	SWIMMING POOL DETAILS
163.	SP3.11	GENERAL NOTES
164.	SP3.12	GENERAL NOTES
165.	SP3.13	TYPICAL CONCRETE DETAILS
166.	SP3.21	POOL FOUNDATION PLAN
167.	SP3.22	POOL SECTIONS
168.	SP3.31	POOL DETAILS
169.	SP3.32	EQUIPMENT ANCHORAGE DETAILS
170.	SP4.1	POOL PLUMBING PLAN
171.	SP4.2	EQUIPMENT ROOM PLAN & ELEVATIONS
172.	SP4.3	POOL EQUIPMENT DETAILS
173.	SP4.4	POOL PLUMBING DETAILS
174.	SP5.1	ELECTRICAL POOL PLAN
175.	SP5.2	ELECTRICAL POOL EQUIPMENT ROOM PLAN
176.	SP5.3	ELECTRICAL DETAILS
PHOTOVOLTAIC SYSTEM (SOLAR POWER)		
177.	PV-0.01	PV GENERAL NOTES & DETAILS
178.	PV-0.02	PV SINGLE LINE DIAGRAM
179.	PV-0.03	PV LABELS AND PLACARDS
180.	PV-0.04	PV DETAILS
181.	PV-0.05	PV DETAILS
182.	PV-1.01	PHOTOVOLTAIC ELECTRICAL PLANS
183.	PV-2.01	PHOTOVOLTAIC ROOF ELECTRICAL PLAN
TELECOMMUNICATION/AUDIO VISUAL AND SECURITY		
184.	SEC-0.01	SYMBOLS LIST, GENERAL NOTES & SCHEDULES
185.	SEC-0.02	ACCESS CONTROL NOTES, RISER DIAGRAM & DETAILS
186.	SEC-0.03	INTRUSION DETECTION NOTES, RISER DIAGRAM & DETAILS
187.	SEC-0.04	CCTV SYSTEM NOTES, RISER DIAGRAM & DETAILS
188.	SEC-1.01	SECURITY SITE PLAN
189.	SEC-3.01	BUILDING SECURITY PLANS
190.	SEC-3.03	POOL BUILDING SECURITY PLAN
191.	TE-0.01	SYMBOLS LIST, GENERAL NOTES & SCHEDULES
192.	TE-0.02	TELECOM. RISER DIAGRAM & DETAILS
193.	TE-1.01	SITE TELECOM PLAN
194.	TE-3.01	BUILDING TELECOM. PLANS
195.	TE-3.03	POOL BUILDING TELECOM. PLAN

GENERAL NOTES:

1. THE CONTRACTOR SHALL VERIFY ALL DIMENSIONS AND CONDITIONS BEFORE STARTING WORK.
2. THE ENGINEER DOES NOT WARRANT THE ACCURACY OF SCALED DIMENSIONS ON ANY PLAN. ALL DIMENSIONS SHALL BE AS DESIGNATED ON THE PLANS. THE CONTRACTOR SHALL PROTECT ALL PUBLIC AND PRIVATE PROPERTY
3. DURING THE PERFORMANCE OF WORK DONE UNDER THE CONTRACT. THE CONTRACTOR SHALL TAKE THE NECESSARY PRECAUTIONS TO AVOID ANY DAMAGE TO ANY STRUCTURES ADJACENT TO THE PROJECT BOUNDARIES.
4. EXISTING UTILITIES SHOWN ARE BASED ON AVAILABLE RECORDS OF PARENT UTILITY COMPANIES AND MAY NOT ACCURATELY REPRESENT THEIR ACTUAL LOCATIONS. PRIOR TO BEGINNING ANY CONSTRUCTION, THE CONTRACTOR SHALL VERIFY THE ACTUAL LOCATIONS (VERTICAL AND HORIZONTAL) OF ALL UTILITIES, IN THE FIELD OR COORDINATE SUCH INDEPENDENT VERIFICATION WITH THE PARENT UTILITY COMPANIES AND PROVIDE THE CITY WITH THE POTHOLE INFORMATION. THE CONTRACTOR SHALL PROTECT IN PLACE OR COORDINATE WITH PARENT COMPANY FOR THE RELOCATION OF CONFLICTING UTILITIES ENCOUNTERED DURING CONSTRUCTION.
5. ADJUST UTILITY VALVE COVERS, UTILITY BOXES, TRAFFIC SIGNAL BOXES, ETC. TO FINISH GARDE. PAYMENT SHALL BE INCLUDED IN THE APPLICABLE CONSTRUCTION BID ITEM AND REFER TO CONSTRUCTION NOTE AND/OR SPECIFICATIONS.
6. PROVIDE TRAFFIC CONTROL PER TECHNICAL PROVISIONS.
7. ALL SURVEY CENTERLINE TIES AND MONUMENTS THAT ARE DAMAGED OR REMOVED SHALL BE RE-ESTABLISHED. THE SURVEYOR SHALL ALSO ESTABLISH CENTERLINE MONUMENTS AND TIES AT ALL STREET INTERSECTIONS WITHIN THE PROJECT LIMITS WHERE NONE EXISTED PRIOR TO CONSTRUCTION. SEE TECHNICAL PROVISIONS.
8. 24 HOUR NOTICE FOR ALL INSPECTIONS REQUIRED.
9. CONTRACTORS SHALL REMOVE AND DISPOSE OF ALL TRASH AND BROKEN BRANCHES BEFORE AND AFTER PAVING.
10. PRIOR TO CUTTING OF ANY ROOTS, CALL PARKS DIVISION AT (310) 217-9564 FOR APPROVAL.
11. CONTRACTOR SHALL BE RESPONSIBLE FOR COORDINATION, OBTAINING NECESSARY APPLICABLE PERMITS WITH LOCAL AGENCIES AND OTHER OWNERS HAVING JURISDICTION AND PREPARING REQUIRED DOCUMENTATION NECESSARY FOR PERMITTING.
12. PROTECT ALL STORM DRAINS, CATCH BASINS, ETC. WITH SAND BAGS, FABRIC, AND OTHER APPROPRIATE BEST MANAGEMENT PRACTICES PER PROJECT SWPPP.
13. THE CONTRACTOR SHALL NOTIFY UNDERGROUND SERVICE ALERT (USA) AT 1-800-422-4133 TWO WORKING DAYS PRIOR TO ANY EXCAVATION WORK.
14. THE CITY OF GARDENA BUILDING DIVISION ENFORCES CBC CHAPTER 11B FOR DISABLED ACCESS COMPLIANCE AND DOES NOT REVIEW OR APPROVE PLANS FOR ADA COMPLIANCE. REFERENCE CBC CHAPTER 11B.

UTILITY CONTACT NUMBERS:

COMPANY	CONTACT	TELEPHONE NO.
CITY OF GARDENA P.W. TRAFFIC/ELECTRICAL	JEFF JALOMO	(310) 217-9430
CITY OF GARDENA P.W. SEWER	JOHN SCHERER	(310) 217-9599
METRO. WATER DISTRICT	CIVIL ENG. SUBSTRUCTURE SEC.	(213) 217-7059
L.A. COUNTY DEPARTMENT OF PUBLIC HEALTH		(626) 430-5360
L.A. DEPARTMENT OF WATER & POWER	JOSE PORRAS	(213) 367-1049
L.A. SANITATION DISTRICT	JON GANZ	(562) 908-4288
L.A. COUNTY FLOOD CONTROL DISTRICT	DARYLL CHENOWETH	(626) 458-3129
CHEVRON PIPELINE CO.	DAVE ZERLER	(310) 669-4014
CROWN CASTLE	HECTOR AGUILERA	(951) 454-5111
SOUTHERN CALIFORNIA EDISON COMPANY	JASON YAMAUCHI	(310) 738-6760
SOUTHERN CALIFORNIA GAS COMPANY	SALVADOR GONZALES	(310) 970-4844
GOLDEN STATE WATER CO.	JOSEPH SALICIDO CONDE VENTURA	(310) 660-0320 X101 (310) 701-2500
AT&T/SBC/PACIFIC BELL	RAYMOND DOVE TERENCE LITTLE CRAIG CHINEN	(310) 515-4257 (310) 515-4252 (310) 408-4518
TIME WARNER/SPECTRUM/ CHARTER COMMUNICATION	ARTURO FERNANDEZ JOSE ORTIZ	(310) 750-9099 (310) 429-3459
CALIFORNIA UNDERGROUND SERVICE ALERT (USA)		(800) 422-4133

PROJECT DIRECTORY:

OWNER:
CITY OF GARDENA
1717 W 162ND ST
GARDENA, CA 90247
PHONE: (310) 217-9694
CONTACT: ALLAN RIGG

CIVIL ENGINEER:
CIVTEC
999 CORPORATE DRIVE, SUITE 100
LADERA RANCH, CA 92694
PHONE: (949) 463-8822
CONTACT: TOM CARCELLI

UTILITIES:
MORAN UTILITIES
27127 CALLE ARROYO #1907
SAN JUAN CAPISTRANO, CA 92675
PHONE: (949) 429-5566
CONTACT: JONATHAN PYLES

SURVEYOR:
STARLIGHT SURVEYING
17955 SKY PARK CIR, SUITE F
IRVINE, CA 92614
PHONE: (949) 757-0613
CONTACT: TED KRULL
LICENSE NO.: PLS 5848
SURVEY NAME/NO.: AMC 21-266
SURVEY DATE: NOV. 2021 & JAN. 2022

LANDSCAPE ARCHITECT:
RJM DESIGN GROUP, INC.
31591 CAMINO CAPISTRANO
SAN JUAN CAPISTRANO, CA 92675
PHONE: (949) 493-2600
CONTACT: LARRY RYAN

POOL DESIGN:
JONES & MADHAVAN
100 THOUSAND OAKS BLVD #211
THOUSAND OAKS, CA 91360
PHONE: (805) 777-8449 EXT 102
CONTACT: NACHI MADHAVAN

IRRIGATION:
GLASIR DESIGN
424 NEW JERSEY LANE
PLACENTIA, CA 92870
PHONE: (714) 514-9930
CONTACT: CHRIS CURRY

ARCHITECT:
SVA ARCHITECTS
6 HUTTON CENTER DR #1150
SANTA ANA, CA 92707
PHONE: (949) 809-3380
CONTACT: DOUG BROWN

ELECTRICAL ENGINEER:
FBA ENGINEERING
150 PAULARINO AVENUE, SUITE A120
COSTA MESA, CA 92626
PHONE: (949) 852-9995
CONTACT: BILL ZAVRSNICK

GEOTECHNICAL ENGINEER:
SOUTHERN CALIFORNIA GEOTECHNICAL
22885 E. SAVI RANCH PARKWAY, SUITE E
YORBA LINDA, CA 92887
PHONE: (714) 685-1118
CONTACT: GREGORY MITCHELL
LICENSE NO.: 2364
REPORT NAME: GEOTECHNICAL INVESTIGATION AND PROPOSED COMMUNITY AQUATIC AND SENIOR CENTER
REPORT DATE: 11/18/2021

PROJECT INFORMATION:

PROJECT AREA: 32,450 S.F. (0.74 ± ACRES)

AREA DISTURBED: 41,380 S.F. (0.95 ± ACRES)

CUT: 850 CUBIC YARDS

FILL: 1,200 CUBIC YARDS

LEGAL DESCRIPTION:

A PORTION OF LOT 21 OF TRACT NO. 10901, IN THE CITY OF GARDENA, COUNTY OF LOS ANGELES, STATE OF CALIFORNIA, AS PER MAP RECORDED IN BOOK 254 PAGES 31 AND 32 OF MAPS, IN THE OFFICE OF THE COUNTY RECORDER OF SAID COUNTY.

AND

LOTS 11 AND 12 OF TRACT NO. 10901, IN THE CITY OF GARDENA, COUNTY OF LOS ANGELES, STATE OF CALIFORNIA, AS PER MAP RECORDED IN BOOK 254, PAGES 31 AND 32 OF MAPS, IN THE OFFICE OF THE COUNTY RECORDER OF SAID COUNTY.

DEFERRED SUBMITTALS:

1. ELEVATOR GUIDE RAILS AND SUPPORT BRACKETS AS DESCRIBED ON PLANS AND IN SPECIFICATIONS
2. FIRE SPRINKLER SYSTEM AS DESCRIBED ON PLANS AND IN SPECIFICATIONS
3. FIRE ALARM SYSTEM AS DESCRIBED ON PLANS AND IN SPECIFICATIONS
4. ROOF ACCESS LADDER AS DESCRIBED ON PLANS AND IN SPECIFICATIONS
5. SEISMIC BRACING OF PLUMBING PIPE AS DESCRIBED ON PLANS AND IN SPECIFICATIONS
6. SHORING PLANS AS DESCRIBED ON PLANS AND IN SPECIFICATIONS
7. BLEACHERS AS DESCRIBED ON PLANS AND IN SPECIFICATIONS

NOTE:
INSTALLATION OF DEFERRED SUBMITTAL ITEMS SHALL NOT BE STARTED UNTIL DETAILS, PLANS, AND SPECIFICATIONS ARE APPROVED BY THE OWNER AND BUILDING DEPARTMENT, ALLOW 30 DAYS FOR OWNER REVIEW. THE PLANS AND SPECIFICATIONS SHALL FIRST BE REVIEWED AND SIGNED BY THE LANDSCAPE ARCHITECT BEFORE SUBMITTAL TO THE OWNER FOR REVIEW. CONTRACTOR TO SCHEDULE DEFERRED APPROVAL SUBMITTALS WELL IN ADVANCE TO ALLOW FOR BOTH ARCHITECT AND OWNER REVIEW.

STATEMENTS:

ENGINEER OF RECORD:

ALL EASEMENTS SHOWN ON THIS PLAN ARE BASED ON PRELIMINARY TITLE REPORTS BY FIDELITY NATIONAL TITLE CO. (ORDER NO. 987-30076643-1RV, DATED OCT. 28. 2021), LAWYERS TITLE (FILE NO. 218254769, DATED SEPT. 7, 2018), AND FIDELITY NATIONAL TITLE CO. (ORDER NO. 989-30033538-D-DL1, DATED FEB. 9, 2021).

PRINT NAME: THOMAS E. CARCELLI DATE: 10/02/2023

SIGNATURE: [signature] LICENSE NO.: C-81640

GEOTECHNICAL ENGINEER:

CONSENTS THAT THESE PLANS ARE IN ACCORDANCE WITH THE GEOTECHNICAL INVESTIGATION PREPARED BY SOUTHERN CALIFORNIA GEOTECHNICAL, INC. DATED 11/18/21. THIS REPORT IS A PART OF THESE CONSTRUCTION DOCUMENTS.

PRINT NAME: GREGORY K. MITCHELL DATE: 10/02/2023

SIGNATURE: [signature] LICENSE NO.: GE 2364

REGISTERED PROFESSIONAL ENGINEER GREGORY K. MITCHELL No. 2364 GEOTECHNICAL STATE OF CALIFORNIA

JURISDICTIONAL APPROVAL PRIOR TO BUILDING PERMIT:

CITY OF GARDENA - COMMUNITY DEVELOPMENT DEPARTMENT
HILDA OLVERA, PERMIT/LICENSING TECH (310) 217-6111 OR JOSEPH FLETCHER (310) 217-9527. CONTRACTOR IS RESPONSIBLE FOR OBTAINING THE BELOW CITY PERMITS; HOWEVER CITY PERMIT FEES ARE WAIVED.

- BUILDING & MEP PERMIT NO. 50022-1389
- LANDSCAPE AND LID PERMIT NO. 50023-0021
- SITE GRADING PERMIT NO. 50023-0022
- POOL-AQUATICS PERMIT NO. 50023-0023
- SOLAR/PHOTOVOLTAIC PERMIT NO. 50023-0024

COUNTY OF LOS ANGELES - DEPARTMENT OF PUBLIC HEALTH

PLAN CHECK NUMBER: SR0324975.
CONTACT: BHARAT DUNGRANI AT (626) 430-5360

COUNTY OF LOS ANGELES - FIRE DEPARTMENT

FEPC2023-0754 - FIRE ENGINEERING - BUILDING PLAN CHECK UNIT - SITE PLAN REVIEW - WATER & ACCESS. CONTACT: MICHAEL BRAVO AT MICHAEL.BRAVO@FIRE.LACOUNTY.GOV

FEPC2023-0755 - FIRE ENGINEERING - BUILDING PLAN CHECK UNIT - SOLAR VOLTAIC ONTACT: MICHAEL BRAVO AT MICHAEL.BRAVO@FIRE.LACOUNTY.GOV

COUNTY OF LOS ANGELES - PUBLIC WORKS

INDUSTRIAL WASTE DISPOSAL PERMIT (A001035443)
ENVIRONMENTAL PROGRAM DIVISION (626) 458-3517

NOTE: CONTRACTOR IS RESPONSIBLE FOR ACQUIRING AND PAYING ALL CONSTRUCTION PERMIT FEES AS SPECIFIED, EXCEPT FOR CITY PERMIT FEES.

DIRECTOR'S SIGNATURE ON TITLEBLOCK CONSTITUTES SIGNATURES FOR ALL SHEETS IN THE PLAN SET.

DIGALERT
DIAL TOLL FREE 1-800-422-4133
AT LEAST TWO DAYS BEFORE YOU DIG
UNDERGROUND SERVICE ALERT OF SOUTHERN CALIFORNIA

BASIS OF BEARINGS:

BEARINGS SHOWN HEREON ARE BASED ON THE CENTERLINE OF 162 ND STREET (FORMERLY MARKET STREET) BEING N 89° 55' 30" E SHOWN ON TRACT NO. 10901, M.B. 254/31-32

BENCHMARK:

THE CITY OF GARDENA BENCHMARK NO. 5D-15 ELEV. = 43.508

APPROVED BY:

CITY OF GARDENA
CITY ENGINEER

DATE:

ACCEPTANCE AS TO THE CONFORMANCE WITH APPLICABLE CITY STANDARDS AND PRACTICES

CITY OF GARDENA FREEWAY CITY INCORPORATED 1930

PREPARED BY:
RJM DESIGN GROUP
31591 Camino Capistrano
San Juan Capistrano, CA 92675
www.RJMdesigngroup.com
[949] 493-2690 fax
[949] 493-2600 phone

LICENSED LANDSCAPE ARCHITECT LARRY RYAN LICENSE No. 2902
Signature
09/30/2025 Renewal Date
10/11/2023 Date
STATE OF CALIFORNIA

REVISIONS

NO.	DESCRIPTION	DATE	APPROVED
1	90% CD SUBMITTAL	12/15/2022	
2	100% CD SUBMITTAL	05/01/2023	
3	FINAL SUBMITTAL	10/02/2023	

CITY OF GARDENA
DEPARTMENT OF PUBLIC WORKS - ENGINEERING

TITLE SHEET
COMMUNITY AQUATICS & SENIOR CENTER
T-1.01

	INITAL	DATE
DESIGNED BY	EC	11/14/2022
DRAWN BY	TP	06/20/2023
CHECKED BY	EC	10/02/2023

APPROVED BY:
10/13/2023 Allan Rigg
DATE DIRECTOR OF PUBLIC WORKS

SHT. 1 OF 195 DWG. NO. 5-2606

FILE PATH: P:\301 GARDENA\301-01 GARDENA AQUATIC & SENIOR CENTER\301-01-CD\301.01 CD T-1.01.DWG
PLOT TIME: 06/30/2023 9:00 AM

GENERAL NOTES:

A. ALL WORK SHALL BE DONE IN ACCORDANCE WITH THE APPLICABLE SECTIONS OF THE 2021 "GREENBOOK" STANDARD SPECIFICATIONS FOR PUBLIC WORKS CONSTRUCTION, 2016 EDITION OF APWA STANDARD PLANS AND SPECIFICATIONS FOR PUBLIC WORKS CONSTRUCTION AND STATE STANDARD SPECIFICATIONS, CALIFORNIA BUILDING CODE, CALIFORNIA PLUMBING CODE, CALIFORNIA, CALIFORNIA MECHANICAL CODE, CALIFORNIA ENERGY CODE, CALIFORNIA GREEN BUILDING STANDARD CODE, ALL SAFETY ORDERS OF THE STATE INDUSTRIAL COMMISSION, TITLE 3, RULES AND REGULATIONS OF THE NATIONAL BOARD OF FIRE UNDERWRITING, STATE OF CALIFORNIA TITLE 24, SECTION T-20-1401 THROUGH T-20-1406, AND TITLE 20, SECTION 1401-1406 ENERGY REGULATIONS, AND CALGREEN,

B. THE DESIGN ADEQUACY AND SAFETY OF EXCAVATION, ERECTION, BRACING, SHORING, TEMPORARY SUPPORTS, ETC., IS THE SOLE RESPONSIBILITY OF THE CONTRACTOR, AND HAS NOT BEEN CONSIDERED BY THE LANDSCAPE ARCHITECT OR CONSULTANTS. THE CONTRACTOR IS RESPONSIBLE FOR PROVIDING THE NECESSARY SAFETY PRECAUTIONS AND MEASURES NECESSARY TO EXECUTE THE WORK. OBSERVATION VISITS TO THE SITE BY THE LANDSCAPE ARCHITECT OR ANY OF HIS/HER CONSULTANTS SHALL NOT INCLUDE INSPECTION OF THE ABOVE ITEMS.

C. DO NOT WILLFULLY PROCEED WITH CONSTRUCTION AS DESIGNED WHEN IT IS OBVIOUS THAT UNKNOWN AND / OR GRADE DIFFERENCES EXIST THAT MAY NOT HAVE BEEN KNOWN DURING DESIGN. SUCH CONDITIONS SHALL BE IMMEDIATELY BROUGHT TO THE ATTENTION OF THE OWNER'S REPRESENTATIVE.

D. THE CONTRACTOR SHALL NOTIFY THE OWNER'S ENGINEER TWO (2) WORKING DAYS PRIOR TO START OF CONSTRUCTION.

E. IT SHALL BE THE CONTRACTOR'S RESPONSIBILITY TO CONDUCT HIS OPERATIONS IN SUCH A MANNER SO AS TO PREVENT DAMAGE TO EXISTING SUBSTRUCTURES. IN THE EVENT OF SUBSTRUCTURE DAMAGE, THE CONTRACTOR SHALL BEAR FULL RESPONSIBILITY AND TOTAL EXPENSE FOR REPAIR AND / OR REPLACEMENT OF SAID SUBSTRUCTURE.

F. THE CONTRACTOR SHALL PROVIDE 72-HOUR NOTICE TO AFFECTED UTILITIES WHEN RELOCATION IS REQUIRED.

G. WORKING HOURS SHALL BE IN ACCORDANCE WITH THE SECTION OF THE SPECIFICATIONS AS DETERMINED BY OWNER.

H. THE CONTRACTOR SHALL NOT BLOCK DRIVEWAYS, PEDESTRIAN ACCESS, ACCESSIBLE ROUTES, OR VEHICULAR TRAFFIC DURING THE PROCESS OF CONSTRUCTION.

I. THE CONTRACTOR SHALL BE RESPONSIBLE FOR TRAFFIC CONTROL IN THE PUBLIC RIGHT OF WAY AND NEW DRIVE AISLES IN ACCORDANCE WITH ALL APPLICABLE CODES.

J. THE CONTRACTOR WILL COMPLY TO CA-MUTCD WATCH MANUAL DURING CONSTRUCTION.

K. CONTRACTOR SHALL NOTIFY UNDERGROUND SERVICE ALERT BEFORE START OF CONSTRUCTION (811).

L. THE CONTRACTOR SHALL BE RESPONSIBLE FOR ALL EROSION CONTROL DURING CONSTRUCTION AND MAINTENANCE PERIOD.

M. THE CONTRACTOR SHALL BE RESPONSIBLE FOR INSTALLING A 6' HIGH TEMPORARY CHAINLINK CONSTRUCTION FENCE WITH LOCKABLE GATES AROUND ALL CONSTRUCTION AREAS. FENCING SHALL BE PROVIDED WITH CONTINUOUS GREEN MESH WINDSCREEN. CONTRACTOR SHALL REVIEW ALIGNMENT / LOCATION OF CONSTRUCTION FENCING WITH OWNER'S REPRESENTATIVE FOR APPROVAL PRIOR TO CONSTRUCTION. CONTRACTOR SHALL MAINTAIN FENCING UNTIL OWNER'S ACCEPTANCE OF THE WORK. OR CONTRACTOR MAY CONTINUE TO USE AND TAKE OWNERSHIP OF THE EXISTING TEMPORARY CHAINLINK FENCE, AND REMOVE AND DISPOSE THEM AT THE FINAL CONSTRUCTION.

N. CONTRACTOR SHALL BE RESPONSIBLE FOR SECURING ALL NECESSARY PERMITS AND APPLICABLE FEES.

O. MAINTAIN SANITARY TOILET FACILITIES DURING CONSTRUCTION AS REQUIRED BY APPLICABLE REGULATIONS.

P. THE GENERAL CONTRACTOR WARRANTS TO THE OWNER AND THE LANDSCAPE ARCHITECT THAT ALL MATERIALS AND EQUIPMENT FURNISHED WILL BE NEW UNLESS OTHERWISE SPECIFIED, AND THAT ALL WORK WILL BE OF GOOD QUALITY, FREE FROM FAULTS AND DEFECTS.

Q. PAVING, MASONRY AND CONCRETE SUBCONTRACTORS ARE TO COORDINATE WITH THE ELECTRICIAN, DRAINLINE SUBCONTRACTOR AND IRRIGATION SUBCONTRACTOR FOR SLEEVING, PIPING AND/OR CONDUIT INSTALLATION UNDER OR THROUGH HARDSCAPE ELEMENTS. ALL WORK SHALL BE COORDINATED BY THE GENERAL CONTRACTOR.

R. VERIFY ALL EASEMENTS, PROPERTY LINES OR LIMIT OF WORK LINES PRIOR TO COMMENCING WORK.

S. IN THE CASE OF DISCREPANCIES IN THE DRAWINGS, SPECIFICATIONS SHALL TAKE PRECEDENCE OVER DETAILS, AND DETAILS SHALL TAKE PRECEDENCE OVER PLANS.

T. SUBSTITUTIONS MUST BE APPROVED IN WRITING BY THE OWNER. SEE SPECIFICATIONS.

U. THE CONTRACT DRAWINGS AND SPECIFICATIONS REPRESENT THE FINISHED PROJECT UNLESS OTHERWISE SHOWN; THEY DO NOT INDICATE THE METHOD OF CONSTRUCTION. THE GENERAL CONTRACTOR SHALL SUPERVISE AND DIRECT THE WORK, AND SHALL BE SOLELY RESPONSIBLE FOR ALL CONSTRUCTION MEANS, METHODS, TECHNIQUES, SEQUENCES AND PROCEDURES. OBSERVATION VISITS TO THE SITE BY FIELD REPRESENTATIVES OF THE LANDSCAPE ARCHITECT AND THEIR CONSULTANTS SHALL NOT INCLUDE INSPECTIONS OF THE PROTECTIVE MEASURES OR THE CONSTRUCTION PROCEDURES REQUIRED FOR SAME, WHICH ARE THE SOLE RESPONSIBILITY OF THE GENERAL CONTRACTOR. ANY SUPPORT SERVICES PERFORMED BY THE LANDSCAPE ARCHITECT AND HIS CONSULTANTS DURING CONSTRUCTION SHALL BE DISTINGUISHED FROM CONTINUOUS AND DETAILED INSPECTION SERVICES, WHICH ARE FURNISHED BY OTHERS. THESE SUPPORT SERVICES PERFORMED BY THE LANDSCAPE ARCHITECT AND HIS CONSULTANTS, WHETHER OF MATERIALS OR WORK, AND WHETHER PERFORMED PRIOR TO, DURING OR AFTER COMPLETION OF CONSTRUCTION, ARE PERFORMED SOLELY FOR THE PURPOSE OF ASSISTING IN QUALITY CONTROL AND IN ACHIEVING CONFORMANCE WITH CONTRACT DRAWINGS AND SPECIFICATIONS BUT THEY DO NOT GUARANTEE GENERAL CONTRACTOR'S PERFORMANCE, AND SHALL NOT BE CONSTRUED AS SUPERVISION OF CONSTRUCTION.

V. CONSTRUCTION ACTIVITIES SHALL NOT INTERFERE WITH ADJACENT EXISTING CONDITIONS. EXISTING SIDEWALKS/BIKEWAYS SHALL REMAIN ACCESSIBLE TO THE PUBLIC THROUGH THE DURATION OF CONSTRUCTION. ALL NECESSARY PROVISIONS SHALL BE MADE TO PROTECT THE SAFETY OF THE GENERAL PUBLIC.

W. DO NOT SCALE THESE DRAWINGS.

ABBREVIATIONS:

@	AT	GUY	GUY WIRE
A.B.	ANCHOR BOLT	H.C.	DISABLED
A.B.S	ACRYLONITRILE BUTADIENE STYRENE PIPE	HT.	HEIGHT
A.C.	ASPHALTIC CONCRETE	HDR	HEADER
AC	ACRE	HORIZ	HORIZONTAL
A.C.P.	ASBESTOS CEMENT PIPE	H.P., HP	HIGH POINT
ALT.	ALTERNATIVE	I.A.	INSIDE DIAMETER
ALUM	ALUMINUM	INV.	INVERT
APPROX.	APPROXIMATE	IRR.	IRRIGATION
AVE	AVENUE	J.A.	JUNCTION BOX
AVG	AVERAGE	JT.	JOINT
B.A.	BEGINNING OF CURVE	L.	LENGTH OF ARC
BC	BOTTOM OF CURB	L.A.	LANDSCAPE ARCHITECT
B.A.P.	BEGINNING OF CURB RETURN	LAT.	LATERAL
BLDG.	BUILDING	LF	LINEAR FEET
BLVD	BOULEVARD	L.P.	LOW POINT
B.M.	BENCH MARK	LT	LEFT
BS	BOTTOM OF STEP	MAX.	MAXIMUM
BW	BACK OF WALK	MFG.	MANUFACTURER
C	CENTER	M.H.	MANHOLE
C., COND.	CONDUIT	MIN.	MINIMUM
CB	CATCH BASIN	N	NORTH
C.F.	CURB FACE	N.I.C.	NOT IN CONTRACT
C&G	CURB AND GUTTER	NO., #	NUMBER
C.J.	CONTROL JOINT	N.T.S.	NOT TO SCALE
CIR	CIRCLE	O.C.	ON CENTER
C/L	CHAIN LINK	O.D.	OUTSIDE DIAMETER
C.L., CL	CENTER LINE	OPP.	OPPOSITE
C.I.	CAST IRON	P.A.	PLANTING AREA
C.M.P.	CORREGATED METAL PIPE	P.B.	PULL BOX
C.M.U.	CONCRETE MASONRY UNIT	P.C. CONC.	PORTLAND CEMENT CONCRETE
C.O.	CLEANOUT	P.C.C.	POINT OF COMPOUND CURVE
CONC.	CONCRETE	PL	PROPERTY LINE
CONST.	CONSTUCT/CONSTRUCTION	P.P.	POWER POLE
CONT.	CONTINUOUS	P.S.I.	POUNDS PER SQUARE INCH
C.A.	CONCRETE PIPE	PT.	POINT
C.R.	CURB RETURN	P.T.	POINT OF TANGENCY
CSK	COUNTERSINK	PVC	POLYVINAL CHLORIDE
CU.	CUBIC	R., RAD.	RADIUS
CU. FT.	CUBIC FEET	R.C.P.	REINFORCED CONCRETE PIPE
CY	CUBIC YARDS	RD	ROAD
DET., DTL.	DETAIL	R.C.V.	REMOTE CONTROL VALVE
D.F.	DRINKING FOUNTAIN	REF.	REFERENCE
DF	DOUGLAS FIR	REQ.	REQUIRED
DG	DECOMPOSED GRANITE	RR	RAILROAD
DIA., Ø	DIAMETER	RT.	RIGHT
DR.	DRIVE	RWD	REDWOOD
DS	DOWNSPOUT	R/W, R.O.W.	RIGHT OF WAY
DWY.	DRIVEWAY	ROS	ROUGH SAWN
E	EAST	S	SOUTH
EA	EACH	SCH.	SCHEDULE
E.C.	END OF CURB	SD	STORM DRAIN
E.C.R.	END OF CURB RETURN	SEC.	SECTION
E.J.	EXPANSION JOINT	SG	SUBGRADE
ELEV.	ELEVATION	SHT	SHEET
E.P.	EDGE OF PAVEMENT	SF	SQUARE FEET
EQ.	EQUAL	SPEC	SPECIFICATIONS
EST.	ESTIMATE	SQ.	SQUARE
E.W.	EACH WAY	ST.	STREET
EX.	EXISTING	STA.	STATION
EXC.	EXCAVATION	STD.	STANDARD
F.F.	FINISHED FLOOR	S4S	SURFACE FOUR SIDE
FFE	FINISH FLOOR ELEVATION	T.C., TC	TOP OF CURB
FG	FINISH GRADE	T.C.B.	TOP OF CATCH BASIN
F.H.	FIRE HYDRANT	T.F., TF	TOP OF FOOTING
F.L., FL	FLOW LINE	T.G., TG	TOP OF GRATE
F.O.B.	FACE OF BUILDING	T&G	TONGUE AND GROOVE
F.O.C.	FACE OF CURB	TOB	TOP OF BEAM
F.S., FS	FINISH SURFACE	TS	TOP OF STEP
FT	FEET/FOOT	T.W., TW	TOP OF WALL
FTG.	FOOTING	TYP.	TYPICAL
GA.	GAUGE	V.	VOLTAGE
GALV.	GALVANIZED	V.C.	VERTICAL CURVE
GC	GROUNDCOVER	VERT.	VERTICAL
G.B.	GRADE BREAK	W/	WITH
G.L.B.	GLUE LAMINATED BEAM	W	WEST
G.P.M.	GALLONS PER MINUTE	W.P.	WATERPROOFING
GR	GRADING	W.M.	WATER METER
GRND	GROUND	WWM	WELDED WIRE MESH
		W.V.	WATER VALVE

NOTICE TO CONTRACTOR:

A. THE CONTRACTOR SHALL BE RESPONSIBLE FOR EXAMINING THE SITE PRIOR TO MOBILIZATION AND THE BEGINNING OF CONSTRUCTION. ANY EXISTING ELEMENTS TO BE PROTECTED IN PLACE, WHICH SHOW ANY TYPE OF DAMAGE (E.G. CRACKED CONCRETE, DAMAGE TO TREES, ETC.), SHOULD BE BROUGHT TO THE ATTENTION OF THE city. OTHERWISE, CONTRACTOR MAY BE HELD RESPONSIBLE FOR REPAIRING OR REPLACING ANY DAMAGED EXISTING ELEMENTS-TO-REMAIN AT HIS EXPENSE.

B. A DIGITAL FILE OF THE HORIZONTAL CONTROL INCLUDING HARDSCAPE WALKWAYS AND PARKING WILL BE PROVIDED TO THE CONTRACTOR PRIOR TO THE START OF CONSTRUCTION TO ASSIST THE SURVEYOR IN THE LAYOUT OF THESE AREAS AND THE PREPARATION OF THE STAKING PLAN.

C. EXISTING UTILITIES WERE OBTAINED FROM OWNER AND AGENCY RECORDS - NOT 'AS BUILT' DRAWINGS. CONTRACTOR MUST POTHOLE AND HAND EXCAVATE WHEN COMPLETING ANY SUB-SURFACE WORK. RELOCATE, LOWER, OR REALIGN ANY UTILITY ENCOUNTERED. MINIMUM DEPTH OVER NEW OR RELOCATED UTILITY IS 24". THE CONTRACTOR SHALL ASCERTAIN THE TRUE VERTICAL AND HORIZONTAL LOCATION AND SIZE OF ANY UNDERGROUND UTILITIES AND SHALL BE RESPONSIBLE FOR DAMAGE TO ANY PUBLIC OR PRIVATE UTILITIES, SHOWN OR NOT SHOWN HEREON.

D. CONTRACTOR SHALL VERIFY ALL CONDITIONS AND DIMENSIONS AT THE JOB SITE AND NOTIFY THE LANDSCAPE ARCHITECT OR HIS REPRESENTATIVE OF ANY DIMENSIONAL ERRORS, OMISSIONS, OR DISCREPANCIES BEFORE BEGINNING OR FABRICATING ANY WORK.

E. DO NOT SCALE THESE DRAWINGS.

SURVEY RESPONSIBILITY NOTES:

A. NOTE: CONTRACTOR SHALL BE SOLELY RESPONSIBLE FOR PROVIDING COMPLETE, TIMELY AND ACCURATE FIELD LAYOUT OF THE PROPOSED SITE IMPROVEMENTS INCLUDING, BUT NOT NECESSARILY LIMITED TO, HORIZONTAL AND VERTICAL CONTROL AND DIMENSIONAL COORDINATION AS NECESSARY TO CONSTRUCT THE WORK IN ACCORDANCE WITH THE CONTRACT DOCUMENTS. REFER TO SHEET C-4.01 FOR THE HORIZONTAL CONTROL PLAN. FOR VERTICAL CONTROL, REFER TO THE BENCHMARK. THIS SURVEY WORK SHALL BE PERFORMED BY OWNER'S DESIGNATED REPRESENTATIVE AND SHALL PROVIDE FOR THE SURVEY AND STAGING OF ALL CONSTRUCTION ELEMENTS AS INDICATED IN PLANS.

B. AN AUTOCAD-COMPATIBLE .DWG FILE OF THE PROPOSED IMPROVEMENTS SHALL BE PROVIDED TO THE CONTRACTOR PRIOR TO THE START OF CONSTRUCTION FOR USE IN PREPARING THE NECESSARY FIELD SURVEYING / LAYOUT OF PROPOSED IMPROVEMENTS BY THE OWNER'S AUTHORIZED REPRESENTATIVE. THE USE OF THIS DIGITAL FILE SHALL BE THE SOLE RESPONSIBILITY OF THE CONTRACTOR AND IS INTENDED TO ASSIST THE SURVEYOR IN THE LAYOUT OF THE PROPOSED IMPROVEMENTS.

C. THESE ELECTRONIC FILES ARE NOT CONSTRUCTION DOCUMENTS. DIFFERENCES MAY EXIST BETWEEN THESE ELECTRONIC FILES AND CORRESPONDING HARD COPY CONSTRUCTION DOCUMENTS ISSUED FOR PUBLIC BID. IN THE EVENT THAT A CONFLICT ARISES BETWEEN THE SIGNED OR SEALED HARD COPY CONSTRUCTION DOCUMENTS AND THE ELECTRONIC FILES, THE SIGNED OR SEALED HARD COPY CONSTRUCTION DOCUMENTS SHALL GOVERN. THE CONTRACTOR IS RESPONSIBLE FOR DETERMINING IF ANY CONFLICT EXISTS AND SHALL BRING ANY DISCREPANCIES TO THE PROJECT LANDSCAPE ARCHITECT'S ATTENTION PRIOR TO ANY FIELD LAYOUT. BY THE CONTRACTOR'S USE OF THESE ELECTRONIC FILES, THEY ARE NOT RELIEVED OF THEIR DUTY TO FULLY COMPLY WITH THE CONTRACT DOCUMENTS, INCLUDING, AND WITHOUT LIMITATION, THE NEED TO CHECK, CONFIRM, AND COORDINATE ALL DIMENSIONS AND DETAILS, TAKE FIELD MEASUREMENTS, VERIFY FIELD CONDITIONS, AND COORDINATE THE WORK WITH THAT OF OTHER CONTRACTORS FOR THE PROJECT.

D. THE DIGITAL INFORMATION PROVIDED BY RJM DESIGN GROUP, INC. SHALL NOT BE USED FOR ANY PURPOSE OTHER THAN FOR THE PROJECT DESCRIBED ABOVE AND SHALL NOT BE RELEASED TO ANY OTHER PARTY WITHOUT THE WRITTEN CONSENT OF RJM DESIGN GROUP, INC. THE INFORMATION CONTAINED ON THE ELECTRONIC MEDIA IS AN INSTRUMENT OF PROFESSIONAL SERVICES AND SHALL REMAIN THE PROPERTY OF RJM DESIGN GROUP, INC.

E. PROJECT SURVEYOR: STARLIGHT SURVEYING
SURVEYOR ADDRESS: 17955 SKY PARK CIR, SUITE F, IRVINE, CA 92614
SURVEYOR NAME: TED KRULL
LICENSE NO.: PLS 5848
SURVEY NAME/NO: AMC 21-266
SURVEY DATE: NOV. 2021 & JAN. 2022

F. THE CONTRACTOR IS REQUIRED TO LOCATE AND TIE OUT SURVEY MONUMENTS IN THE PROJECT AREA PRIOR TO CONSTRUCTION. SEE SPECIFICATION SECTION 3-10.4, PERMANENT SURVEY MARKERS FOR FURTHER DETAILS.

DIGALERT
DIAL TOLL FREE
1-800-422-4133
AT LEAST TWO DAYS BEFORE YOU DIG
UNDERGROUND SERVICE ALERT OF SOUTHERN CALIFORNIA

BASIS OF BEARINGS:

BEARINGS SHOWN HEREON ARE BASED ON THE CENTERLINE OF 162 ND STREET (FORMERLY MARKET STREET) BEING N 89° 55' 30" E SHOWN ON TRACT NO. 10901, M.B. 254/31-32

BENCHMARK:

THE CITY OF GARDENA BENCHMARK NO. 5D-15 ELEV. = 43.508

APPROVED BY:

CITY OF GARDENA
CITY ENGINEER

DATE: ______________

ACCEPTANCE AS TO THE CONFORMANCE WITH APPLICABLE CITY STANDARDS AND PRACTICES

CITY OF GARDENA · FREEWAY CITY · INCORPORATED 1930

PREPARED BY:

RJM DESIGN GROUP
31591 Camino Capistrano
San Juan Capistrano, CA 92675
www.RJMdesigngroup.com
[949] 493-2690 fax
[949] 493-2600 phone

LICENSED LANDSCAPE ARCHITECT · STATE OF CALIFORNIA
Signature
09/30/2025
Renewal Date
10/04/2023
Date

REVISIONS

NO.	DESCRIPTION	DATE	APPROVED
1	90% CD SUBMITTAL	12/15/2022	
2	100% CD SUBMITTAL	05/01/2023	
3	FINAL SUBMITTAL	10/02/2023	

CITY OF GARDENA
DEPARTMENT OF PUBLIC WORKS - ENGINEERING

GENERAL NOTES

COMMUNITY AQUATICS & SENIOR CENTER

T-1.02

	INITAL	DATE
DESIGNED BY	EC	11/14/2022
DRAWN BY	TP	06/20/2023
CHECKED BY	EC	10/02/2023

APPROVED BY:

DATE ______ DIRECTOR OF PUBLIC WORKS

SHT. 2 OF 195 DWG. NO. 5-2606

FILE PATH: P:\301 GARDENA\301-01 GARDENA AQUATIC & SENIOR CENTER\301-01-CD\301.01 CD T-1.01.DWG
PLOT TIME: 06/30/2023 9:00 AM

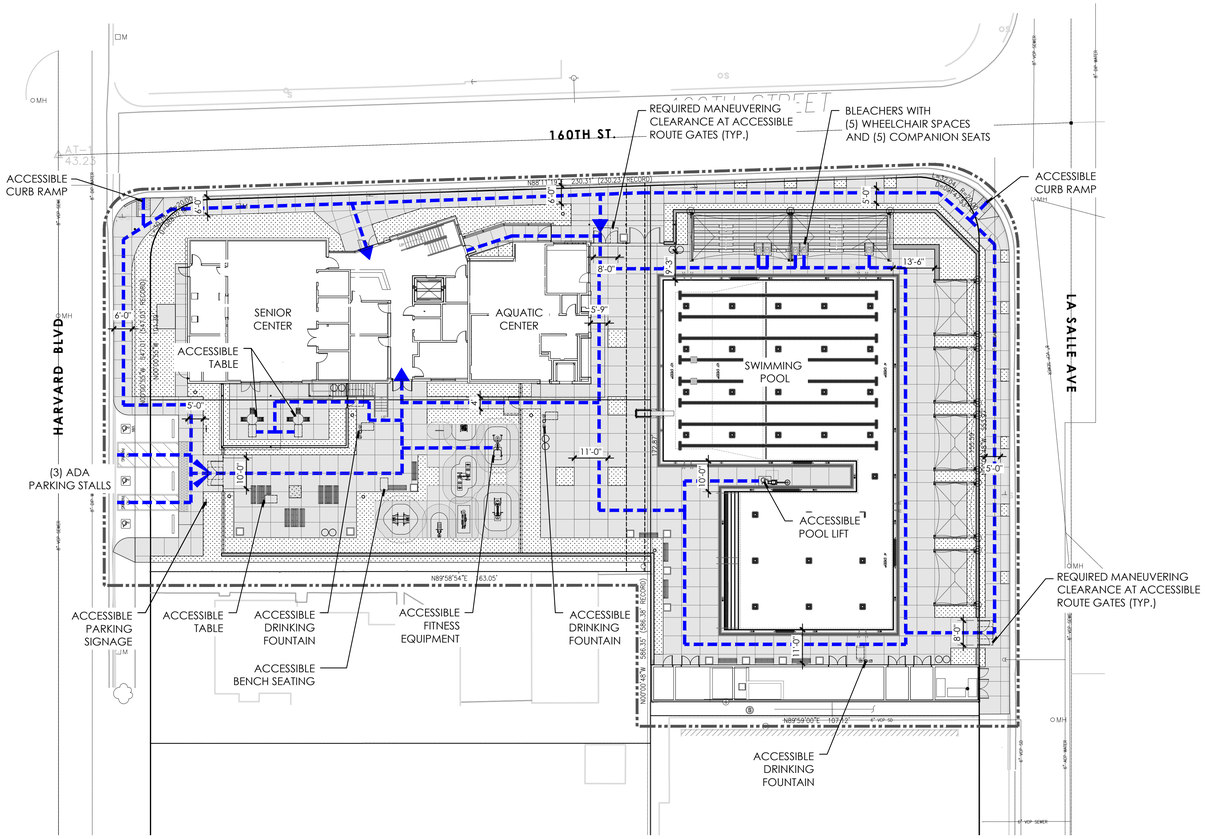

SITE ACCESSIBILITY PLAN
SCALE: **1" = 20'-0"**

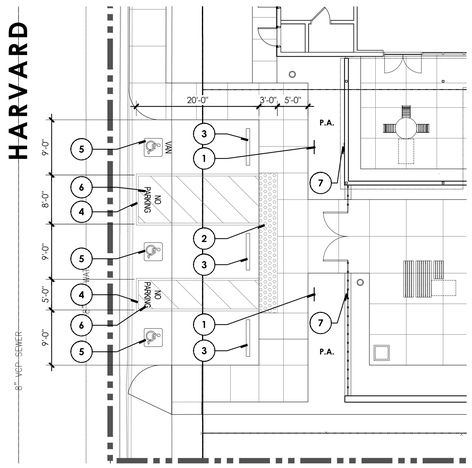

ACCESSIBLE PARKING PLAN ENLARGEMENT
SCALE: **1" = 10'-0"**

CONSTRUCTION LEGEND:

	CONSTRUCT:	DETAIL REFERENCE:
1	ADA ACCESSIBLE PARKING SIGNAGE	DETAIL: 5 SHEET: L-2.01
2	TRUNCATED DOMES - PER CIVIL	DETAIL: 9 SHEET: C-0.02
3	WHEEL STOP - PER CIVIL	DETAIL: 10 SHEET: C-0.02
4	ACCESS AISLE - PER CIVIL	DETAIL: 9 SHEET: C-0.02
5	INTERNATIONAL SYMBOL OF ACCESSIBILITY - PER CIVIL	DETAIL: 9 SHEET: C-0.02
6	"NO PARKING" IN WHITE LETTERS 12" HIGH - PER CIVIL	DETAIL: 9 SHEET: C-0.02
7	ADA ADDITIONAL PARKING SIGN PER CBC 11B-502.8 INSTALLED ON WALL/FENCE	DETAIL: 5 SHEET: L-2.01

CODE ANALYSIS

OCCUPANCY LOAD CALCULATIONS PER CBC TABLE 1004.12
POOL = 1 OCCUPANT / 50 SQ. FT.
DECK = 1 OCCUPANT / 15 SQ. FT.
BLEACHER = 1 OCCUPANT / 18" (A-5 OCCUPANCY)
DECK = 1 OCCUPANT / 15 SQ. FT.

COMPETITION POOL AND ACTIVITY POOL AREA

DECK AREA	661 OCCUPANTS
POOL SURFACE AREA	140 OCCUPANTS
PERMANENT BLEACHER SEATING	196 OCCUPANTS
	997 OCCUPANTS

997 OCCUPANTS x 0.2" = 199.4" = 16'-8" GATE WIDTH REQUIRED
20' GATE WIDTH PROVIDED WITH (5) 4' GATES

ADA ACCESSIBLE ROUTE LEGEND

- (N) LANDSCAPE AREA
- (N) PEDESTRIAN CONCRETE PAVING
- (N) WALLS / LOW WALLS
- (N) ACCESSIBLE ROUTE — NOT TO EXCEED 5% CROSS SLOPES NOT TO EXCEED 2%
- (N) MAIN ENTRY
- (N) REQUIRED MANEUVERING CLEARANCE / CLEAR FLOOR SPACE

ADA ACCESSIBLE ROUTE NOTES

* SEE ADDITIONAL COUNTY OF LOS ANGELES ACCESSIBILITY GENERAL NOTES - SHEET T-1.04

A. ACCESSIBLE ROUTE AS INDICATED IS A BARRIER-FREE ACCESS ROUTE WITHOUT ANY ABRUPT VERTICAL CHANGES EXCEEDING ¼" BEVELED AT 2 HORIZONTAL : 1 VERTICAL MAXIMUM SLOPE, EXCEPT THAT LEVEL CHANGES DO NOT EXCEED ¼" VERTICAL AND IS AT LEAST 48" WIDE. SURFACE IS SLIP RESISTANT, STABLE, FIRM AND SMOOTH. CROSS-SLOPE DOES NOT EXCEED 2% AND SLOPE IN THE OF TRAVEL IS LESS THAN 5% UNLESS OTHERWISE INDICATED. (P.O.T.) SHALL BE MAINTAINED FREE OF OVERHANGING OBSTRUCTIONS TO 80" MINIMUM (11B-307.4) AND PROTRUDING OBJECTS GREATER THAN 4" PROJECTION FROM WALL AND ABOVE 27" AND LESS THAN 80" (11B-204/11B-307). THE CONTRACTOR SHALL VERIFY THAT ALL BARRIERS IN THE PATH OF TRAVEL HAVE BEEN REMOVED OR WILL BE REMOVED UNDER THIS PROJECT, AND PATH OF TRAVEL COMPLIES WITH CBC 11B-206.

B. GATES AT PATH OF TRAVEL MUST COMPLY WITH EXIT DOOR REQUIREMENT (CBC SECTION 1010). GATES IN THE PATH OF TRAVEL SHALL HAVE PANIC HARDWARE.

C. PROVIDE DIRECTIONAL SIGNS TO IDENTIFY AN APPARENT AND CONVENIENT PATH OF TRAVEL FOR PERSONS WITH DISABILITIES. LOCATION OF ALL DIRECTIONAL SIGNS IS INDICATED ON THIS PLAN. SIGNS TO COMPLY WITH SECTION 11B-216.3 / 11B-703.

D. SURFACE SLOPES OF ACCESSIBLE PARKING SPACES SHALL BE THE MINIMUM POSSIBLE AND SHALL NOT EXCEED ONE UNIT VERTICAL TO 50-UNITS HORIZONTAL (2-PERCENT SLOPE) IN ANY DIRECTION (11B-502.4).

E. RAMP SHALL NOT ENCROACH INTO ANY ACCESSIBLE PARKING SPACE OR THE ADJACENT ACCESS AISLE. THE MAXIMUM CROSS SLOPE IN ANY DIRECTION OF AN ACCESSIBLE PARKING SPACE AND ADJACENT ACCESS AISLE SHALL NOT EXCEED 2 PERCENT (1109A.8.2).

F. PROVIDE A BUMPER OR CURB IN EACH PARKING AREA TO PREVENT ENCROACHMENT OF CARS OVER THE REQUIRED WIDTH OF WALKWAYS (11B-502.7.2).

G. PROVIDE A CONTINUOUS COMMON SURFACE FOR WALKS AND SIDEWALKS, NOT INTERRUPTED BY STEPS OR BY ABRUPT CHANGES IN LEVEL EXCEEDING 1/2". (11B-403) SHOULD CHANGE NOT EXCEEDING 1/2" OCCUR, THEY SHALL BE BEVELED WITH A SLOPE NO GREATER THAN ONE UNIT VERTICAL TO 2 UNITS HORIZONTAL (50 PERCENT), EXCEPT THAT LEVEL CHANGES NOT EXCEEDING 1/4" MAY BE VERTICAL (11B-403.4, FIG 11B-303.2 & 11B-303.3).

H. PROVIDE A CURB RAMP FOR ABRUPT CHANGES IN LEVEL GREATER THAN 1/2" (11B-303.4).

I. WALK AND SIDEWALK SURFACE CROSS SLOPES SHALL NOT EXCEED 1/4" PER FOOT (11B-403.3).

J. WALKS, SIDEWALKS, AND PEDESTRIAN WAYS SHALL BE FREE OF GRATINGS WHENEVER POSSIBLE. FOR GRATINGS LOCATED IN THE SURFACE OF ANY OF THESE AREAS, GRID OPENINGS IN GRATINGS SHALL BE LIMITED TO ½" IN THE DIRECTION OF TRAFFIC FLOW. IF GRATINGS HAVE ELONGATED OPENINGS, THEY SHALL BE PLACED SO THAT THE LONG DIMENSION IS PERPENDICULAR TO THE DOMINANT DIRECTION OF TRAVEL (11B-302.3. FIG11B-302.3).

K. MAXIMUM SLOPES OF ADJOINING GUTTERS, ROAD SURFACE IMMEDIATELY ADJACENT TO THE CURB RAMP OR ACCESSIBLE ROUTE, SHALL NOT EXCEED ONE UNIT VERTICAL TO 20 UNITS HORIZONTAL (5 PERCENT SLOPE) WITH 4 FEET OF THE TOP AND BOTTOM OF THE CURB RAMP (11B-406.2.1). THE SLOPE OF THE FANNED OR PARALLEL CURB RAMPS SHALL NOT EXCEED ONE UNIT VERTICAL TO 12 HORIZONTAL (8.3 PERCENT SLOPE)(11B-406.3.1 & 11B-406.4.1).

L. THE MAXIMUM SLOPE OF A RAMP THAT SERVES ANY EXIT WAY, PROVIDES ACCESS FOR PERSONS WITH PHYSICAL DISABILITIES, OR IS IN THE ACCESSIBLE ROUTE OF TRAVEL SHALL BE 1 FOOT RISE IN 12 FEET OF HORIZONTAL RUN (8.3 PERCENT GRADIENT). THE LEAST POSSIBLE SLOPE SHALL BE USED FOR ANY RAMP (11B-405.2).

N

GRAPHIC SCALE

(IN FEET)
1" = 20'

DIGALERT
DIAL TOLL FREE 1-800-422-4133
AT LEAST TWO DAYS BEFORE YOU DIG
UNDERGROUND SERVICE ALERT OF SOUTHERN CALIFORNIA

BASIS OF BEARINGS:
BEARINGS SHOWN HEREON ARE BASED ON THE CENTERLINE OF 162 ND STREET (FORMERLY MARKET STREET) BEING N 89° 55' 30" E SHOWN ON TRACT NO. 10901, M.B. 254/31-32

BENCHMARK:
THE CITY OF GARDENA BENCHMARK NO. 5D-15 ELEV. = 43.508

CONSULTANT:

PREPARED UNDER THE SUPERVISION OF:
RJM DESIGN GROUP
31591 Camino Capistrano
San Juan Capistrano, CA 92675
www.RJMdesigngroup.com
(949) 493-2690 fax
(949) 493-2600 phone

LICENSED LANDSCAPE ARCHITECT — 5989 — REGISTERED PROFESSIONAL — STATE OF CALIFORNIA
07.05.2023 — 06.30.2025

REVISIONS

NO.	DESCRIPTION	DATE	APPROVED
1	90% CD SUBMITTAL	12/15/2022	
2	100% CD SUBMITTAL	05/01/2023	
3	FINAL SUBMITTAL	10/02/2023	

CITY OF GARDENA
DEPARTMENT OF PUBLIC WORKS - ENGINEERING
SITE ACCESSIBILITY PLAN / CODE ANALYSIS
COMMUNITY AQUATICS & SENIOR CENTER
T-1.03

	INITAL	DATE
DESIGNED BY	EC	11/14/2022
DRAWN BY	TF	06/20/2023
CHECKED BY	EC	10/02/2023

APPROVED BY:
DATE
DIRECTOR OF PUBLIC WORKS

SHT. 3 OF 195 DWG. NO. S-2606

© 2023 GARDENA CITY OF GARDENA DEPARTMENT OF PUBLIC WORKS ALL RIGHTS RESERVED

GENERAL PROJECT INFORMATION

PLAN CHECK NO _____ DISTRICT NO _____
JOB ADDRESS _____ CITY _____ ZIP _____

NOTE: Numbers in the parenthesis ( ) refer to sections of the 2017 edition of the Los Angeles County Building Code, Table (T) & Building Code Manual (BCM).

Please blueprint these General Notes on your plans.

The State of California delegates to the local jurisdiction the authority to ensure compliance with Title 24, Part 2 of the California Code of Regulations. This correction list indicates specific areas of Title 24, Part 2 which are applicable to your project. Please be aware that the owner(s) of this building and his/her consultants are responsible for compliance with the most current Federal Regulations contained in the Americans with Disabilities Act (ADA) and Fair Housing Act (FHA). Where the ADA & FHA requirements exceed those contained in Title 24, Part 2, it is the owners responsibility and consultants to ensure compliance with the most current ADA & FHA regulations, as the County/City is not delegated the authority to plan review or inspect projects for ADA & FHA compliance.

A. APPLICATION AND ADMINISTRATION

1. Public accommodations shall maintain in operable working condition those features of facilities and equipment that are required to be accessible to and useable by persons with disabilities. Isolated or temporary interruptions in service or accessibility due to maintenance or repairs shall be permitted. **§11B-108**

B. BUILDING BLOCKS

FLOOR OR GROUND SURFACES

1. Floor and ground surfaces shall be stable, firm, and slip resistant. **§11B-302.1**
2. Carpet or carpet tile shall be securely attached and shall have a firm cushion, pad, or backing or no cushion or pad. Carpet or carpet tile shall have a level loop, textured loop, level cut pile, or level cut/uncut pile texture. Pile height shall be ½ inch maximum. **§11B-302.2, Figure 11B-302.2**

CHANGES IN LEVEL

3. Vertical changes in level for floor or ground surfaces may be ¼ inch high maximum and without edge treatment. Changes in level greater than ¼ inch and not exceeding ½ inch in height shall be beveled with a slope not steeper than 1:2. **§11B-303, Figures 11B-303.2 & 11B-303.3**
4. Changes in level greater than ½ inch in height shall be ramped and shall comply with the requirements of 11B-405 Ramps or 11B-406 Curb Ramps as applicable. **§11B-303**
5. Abrupt changes in level exceeding 4 inches in a vertical dimension between walks, sidewalks or other pedestrian ways and adjacent surfaces or features shall be identified by warning curbs at least 6 inches in height above the walk or sidewalk surface or by guards or handrails with a guide rail centered 2 inches minimum and 4 inches maximum above the surface of the walk or sidewalk. These requirements do not apply between a walk or sidewalk and an adjacent street or driveway. **§11B-303.5**

TURNING SPACE

6. Circular turning spaces shall be a space of 60 inches diameter minimum and may include knee and toe clearance complying with 11B-306 Knee and Toe Clearance. **§11B-304.3.1**
7. T-Shaped turning spaces shall be a T-shaped space within a 60 inch square minimum with arms and base 36 inches wide minimum. Each arm of the T shall be clear of obstructions 12 inches minimum in each direction and the base shall be clear of obstructions 24 inches minimum. **§11B-304.3.2, Figure 11B-304.3.2**

KNEE AND TOE CLEARANCE

8. For lavatories and built-in dining and work surfaces required to be accessible, toe clearance shall be provided that is 30 inches in width and 9 inches in height above the finish floor or ground for a depth of 19 inches minimum. **§11B-306.2.1**
9. Toe clearance shall extend 19 inches maximum under lavatories for toilet and bathing facilities and 25 inches maximum under other elements. **§11B-306.2.2**
10. At lavatories in toilet and bathing facilities, knee clearance shall be provided that is 30 inches in width for a depth of 11 inches at 9 inches above the finish floor or ground and for a depth of 8 inches at 27 inches above the finish floor or ground increasing to 29 inches high minimum above the finish floor or ground at the front edge of a counter with a built-in lavatory or at the front edge of a wall-mounted lavatory fixture. **§11B-306.3.3, Figure 11B-306.3(c)**
11. At dining and work surfaces required to be accessible, knee clearance shall be provided that is 30 inches in width at 27 inches above the finish floor or ground for a depth of at least 19 inches. **§11B-306.3**

PROTRUDING OBJECTS

12. Except for handrails, objects with leading edges more than 27 inches and less than 80 inches above the finish floor or ground shall protrude no more than 4 inches horizontally into the circulation path. Handrails may protrude 4½ inches maximum. **§11B-307.2, Figure 11B-307.2**
13. Freestanding objects mounted on posts or pylons shall overhang circulation paths no more than 12 inches when located from 27 to 80 inches above the finish floor or ground. **§11B-307.3, Figure 11B-307.3(a)**
14. Protruding objects shall not reduce the clear width required for accessible routes. **§11B-307.5**
15. Lowest edge of a sign or other obstruction, when mounted between posts or pylons separated with a clear distance greater than 12 inches, shall be less than 27 inches or more than 80 inches above the finish floor or ground. **§11B-307.3, Figure 11B-307.3(b)**
16. Vertical clearance shall be at least 80 inches high on circulation paths except at door closers and door stops, which may be 78 inches minimum above the finish floor or ground. **§11B-307.4**
17. Guardrails or other barriers with a leading edge located 27 inches maximum above the finish floor or ground shall be provided where the vertical clearance on circulation paths is less than 80 inches high. **§11B-307.4, Figure 11B-307.4**
18. Where a guy support is used within either the width of a circulation path or 24 inches maximum outside of a circulation path, a vertical guy brace, sidewalk guy or similar device shall be used to prevent a hazard or an overhead obstruction. **§11B-307.4.1, Figure 11B-307.4.1**

REACH RANGES

19. Electrical controls and switches intended to be used by the occupant of a room or area to control lighting and receptacle outlets, appliances or cooling, heating and ventilating equipment shall be located within allowable reach ranges. Low reach shall be measured to the bottom of the outlet box and high reach shall be measured to the top of the outlet box. **§11B-308.1.1**
20. Electrical receptacle outlets on branch circuits of 30 amperes or less and communication system receptacles shall be located within allowable reach ranges. Low reach shall be measured to the bottom of the outlet box and high reach shall be measured to the top of the outlet box. **§11B-308.1.2.**
21. High forward reach that is unobstructed shall be 48 inches maximum and the low forward reach shall be 15 inches minimum above the finish floor or ground. **§11B-308.2.1, Figure 11B-308.2.1**
22. High forward reach shall be 48 inches maximum where the reach depth is 20 inches or less and 44 inches maximum where the reach depth exceeds 20 inches. High forward reach shall not exceed 25 inches in depth. **§11B-308.2.2, Figure 11B-308.2.2**
23. High side reach shall be 48 inches maximum and the low side reach shall be 15 inches minimum above the finish floor where the side reach is unobstructed or the depth of any obstruction does not exceed 10 inches. **§11B-308.3.1, Figure 11B-308.3.1**
24. High side reach shall be 46 inches maximum above the finish floor or ground where the high side reach is over an obstruction more than 10 inches but not more than 24 inches in depth. **§11B-308.3.2, Figure 11B-308.3.2**

25. Obstructions for high side reach shall not exceed 34 inches in height and 24 inches in depth. **§11B-308.3.2, Figure 11B-308.3.2**
26. Obstructed high side reach for the top of washing machines and clothes dryers shall be permitted to be 36 inches maximum above the finish floor. **§11B-308.3.2**
27. Obstructed high side reach for the operable parts of fuel dispensers shall be permitted to be 54 inches maximum measured from the surface of the vehicular way where fuel dispensers are installed on existing curbs. **§11B-308.3.2**

OPERABLE PARTS

28. Operable parts shall be operable with one hand and shall not require tight grasping, pinching, or twisting of the wrist. Force required to activate operable parts shall be 5 pounds maximum. **§11B-309.4**

C. ACCESSIBLE ROUTES

DETECTABLE WARNINGS AND DETECTABLE DIRECTIONAL TEXTURE

1. Detectable warning surfaces shall be yellow and approximate FS 33538 of Federal Standard 595C. **§11B-705.1.1.3.1**
2. Detectable warning surfaces shall provide a 70 percent minimum visual contrast with adjacent walking surfaces. Contrast in percent shall be determined by:

   Contrast percent = [(B1-B2)/B1] x 100 where

   B1 = light reflectance value (LRV) of the lighter area and

   B2 = light reflectance value (LRV) of the darker area

   §11B-705.1.1.3.2 (See exception)

DOORS, DOORWAYS, AND GATES

3. Doors, doorways, and gates providing user passage shall be provided in accordance with 11B-206.5 Doors, Doorways, and Gates. **§11B-206.5**
4. Doors, doorways and gates that are part of an accessible route shall comply with 11B-404 Doors, Doorways, and Gates. **§11B-404.1**
5. Door openings shall provide a clear width of 32 inches minimum. Clear openings of doorways with swinging doors shall be measured between the face of the door and the stop, with the door open 90 degrees. Openings more than 24 inches deep shall provide a clear opening of 36 inches minimum. There shall be no projections into the required clear opening width lower than 34 inches above the finish floor or ground. Projections into the clear opening width between 34 inches and 80 inches above the finish floor or ground shall not exceed 4 inches. **§11B-404.2.3**
6. Swinging doors and gates shall have maneuvering clearances complying with Table 11B-404.2.4.1. **§11B-404.2.4.1**
7. Doorways less than 36 inches wide without doors or gates, sliding doors, or folding doors shall have maneuvering clearances complying with Table 11B-404.2.4.2. **§11B-404.2.4.2**
8. Maneuvering clearances for forward approach shall be provided when any obstruction within 18 inches of the latch side an interior doorway, or within 24 inches of the latch side of an exterior doorway, projects more than 8 inches beyond the face of the door, measured perpendicular to the face of the door or gate. **§11B-404.2.4.3**
9. Thresholds, if provided at doorways, shall be ½ inch high maximum. Raised thresholds and changes in level at doorways shall comply with 11B-302 Floor or Ground Surfaces and 11B-303 Changes in Level. **§11B-404.2.5**
10. Handles, pulls, latches, locks, and other operable parts on doors and gates shall comply with 11B-309.4 Operation. Operable parts of such hardware shall be 34 inches minimum and 44 inches maximum above the finish floor or ground. Where sliding doors are in the fully open position, operating hardware shall be exposed and usable from both sides. **§11B-404.2.7**
11. The force for pushing or pulling open a door or gate other than fire doors shall be as follows: **§11B-404.2.9**
    a. Interior hinged doors and gates: 5 pounds maximum.
    b. Sliding or folding doors: 5 pounds maximum.

    c. Required fire doors: the minimum opening force allowable by the appropriate administrative authority, not to exceed 15 pounds.
    d. Exterior hinged doors: 5 pounds maximum.
12. Swinging door and gate surfaces within 10 inches of the finish floor or ground measured vertically shall have a smooth surface on the push side extending the full width of the door or gate. Parts creating horizontal or vertical joints in these surfaces shall be within 1/16 inch of the same plane as the other and be free of sharp or abrasive edges. Cavities created by added kick plates shall be capped. **§11B-404.2.10**

RAMPS

13. Ramp runs shall have a running slope not steeper than 1:12 (8.33%). **§11B-405.2**
14. Cross slope of ramp runs shall not be steeper than 1:48 (2.083%). **§11B-405.3**
15. Floor or ground surfaces of ramp runs shall comply with 11B-302 Floor or Ground Surfaces. Changes in level other than the running slope and cross slope are not permitted on ramp runs. **§11B-405.4**
16. The clear width of a ramp run shall be 48 inches minimum. **§11B-405.5**
17. The rise for any ramp run shall be 30 inches maximum. **§11B-405.6**
18. Ramps shall have landings at the top and the bottom of each ramp run. **§11B-405.7**
19. Landings shall comply with 11B-302 Floor or Ground Surfaces. Changes in level are not permitted. **§11B-405.7.1**
20. The landing clear width shall be at least as wide as the widest ramp run leading to the landing. **§11B-405.7.2**
21. Top landings shall be 60 inches wide minimum. **§11B-405.7.2.1**
22. The landing clear length shall be 60 inches long minimum. **§11B-405.7.3**
23. Bottom landings shall extend 72 inches minimum in the direction of ramp run. **§11B-405.7.3.1**
24. Ramps that change direction between runs at landings shall have a clear landing 60 inches minimum by 72 inches minimum in the direction of downward travel from the upper ramp run. **§11B-405.7.4**
25. Where doorways are located adjacent to a ramp landing, maneuvering clearances required by 11B-404.2.4 and 11B-404.3.2 shall be permitted to overlap the required landing area. Doors, when fully open, shall not reduce the required ramp landing width by more than 3 inches. Doors, in any position, shall not reduce the minimum dimension of the ramp landing to less than 42 inches. **§11B-405.7.5**
26. Ramp runs shall have compliant handrails per 11B-505 Handrails. **§11B-405.8**
27. Edge protection complying with 11B-405.9.2 Curb or Barrier shall be provided on each side of ramp runs and at each side of ramp landings. **§11B-405.9 (See exceptions)**
28. A curb, 2 inches high minimum, or barrier shall be provided that prevents the passage of a 4 inch diameter sphere, where any portion of the sphere is within 4 inches of the finish floor or ground surface. To prevent wheel entrapment, the curb or barrier shall provide a continuous and uninterrupted barrier along the length of the ramp. **§11B-405.9.2**
29. Landings subject to wet conditions shall be designed to prevent the accumulation of water. **§11B-405.10**

HANDRAILS

30. Handrails shall be provided on both sides of stairs and ramps. **§11B-505.2**
31. Handrails shall be continuous within the full length of each stair flight or ramp run. Inside handrails on switchback or dogleg stairs and ramps shall be continuous between flights or runs. **§11B-505.3**
32. Top of gripping surfaces of handrails shall be 34 inches minimum and 38 inches maximum vertically above walking surfaces, stair nosings, and ramp surfaces. Handrails shall be at a consistent height above walking surfaces, stair nosings, and ramp surfaces. **§11B-505.4**
33. Clearance between handrail gripping surfaces and adjacent surfaces shall be 1½ inches minimum. Handrails may be located in a recess if the recess is 3 inches maximum deep and 18 inches minimum clear above the top of the handrail. **§11B-505.5**

34. Handrail gripping surfaces shall be continuous along their length and shall not be obstructed along their tops or sides. The bottoms of handrail gripping surfaces shall not be obstructed for more than 20 percent of their length. Where provided, horizontal projections shall occur 1½ inches minimum below the bottom of the handrail-gripping surface. **§11B-505.6**
35. Handrail gripping surfaces with a circular cross section shall have an outside diameter of 1¼ inches minimum and 2 inches maximum. **§11B-505.7.1**
36. Handrail gripping surfaces with a non-circular cross section shall have a perimeter dimension of 4 inches minimum and 6¼ inches maximum, and a cross-section dimension of 2¼ inches maximum. **§11B-505.7.2**
37. Handrail gripping surfaces shall extend beyond and in the same direction of stair flights and ramp runs in accordance with Section 11B-505.10 Handrail Extensions. **§11B-505.10**
38. Ramp handrails shall extend horizontally above the landing for 12 inches minimum beyond the top and bottom of ramp runs. Extensions shall return to a wall, guard, or the landing surface, or shall be continuous to the handrail of an adjacent ramp run. **§11B-505.10.1**
39. At the top of a stair flight, handrails shall extend horizontally above the landing for 12 inches minimum beginning directly above the first riser nosing. Extensions shall return to a wall, guard, or the landing surface, or shall be continuous to the handrail of an adjacent stair flight. **§11B-505.10.2**
40. At the bottom of a stair flight, handrails shall extend at the slope of the stair flight for a horizontal distance equal to one tread depth beyond the last riser nosing. The horizontal extension of a handrail shall be 12 inches long minimum and a height equal to that of the sloping portion of the handrail as measured above the stair nosings. Extension shall return to a wall, guard, or the landing surface, or shall be continuous to the handrail of an adjacent stair flight. **§11B-505.10.3**

STAIRWAYS

41. A stair is defined as a change in elevation, consisting of one or more risers. **§11B-202**
42. All steps on a flight of stairs shall have uniform riser heights and uniform tread depths. Risers shall be 4 inches high minimum and 7 inches high maximum. Treads shall be 11 inches deep minimum. Curved stairways with winder treads are permitted at stairs which are not part of a required means of egress. (See exception) **§11B-504.2**
43. Open risers are not permitted. **§11B-504.3 (See exceptions)**
44. Interior stairs shall have the upper approach and lower tread marked by a stripe providing clear visual contrast. Exterior stairs shall have the upper approach and all treads marked by a stripe providing clear visual contrast. The stripe shall be a minimum of 2 inches wide to a maximum of 4 inches wide placed parallel to, and not more than 1 inch from, the nose of the step or upper approach. The stripe shall extend the full width of the step or upper approach and shall be of material that is at least as slip resistant as the other treads of the stair. A painted stripe shall be acceptable. Grooves shall not be used to satisfy this requirement. **§11B-504.4.1**
45. The radius of curvature at the leading edge of the tread shall be ½ inch maximum. Nosings that project beyond risers shall have the underside of the leading edge curved or beveled. Risers shall be permitted to slope under the tread at an angle of 30 degrees maximum from vertical. The permitted projection of the nosing shall extend 1¼ inches maximum over the tread below. **§11B-504.5 (See exception for existing buildings)**
46. Stairs shall have handrails complying with Section 11B-505 Handrails. **§11B-504.6**
47. Stair treads and landings subject to wet conditions shall be designed to prevent the accumulation of water. **§11B-504.7**
48. Floor identification signs required by Chapter 10, Section 1022.9 complying with Sections 11B-703.1 Signs General, 11B-703.2 Raised Characters, 11B-703.3 Braille and 11B-703.5 Visual Characters shall be located at the landing of each floor level, placed adjacent to the door on the latch side, in all enclosed stairways in buildings two or more stories in height to identify the floor level. At the exit discharge level, the sign shall include a raised five pointed star located to the left of the identifying floor level. The outside diameter of the star shall be the same as the height of the raised characters. **§11B-504.8**

CURB RAMPS, BLENDED TRANSITIONS AND ISLANDS

49. Perpendicular ramp runs shall have a running slope not steeper than 1:12 (8.33%). **§11B-406.2.1**

50. For perpendicular ramps, where provided, curb ramp flares shall not be steeper than 1:10. **§11B-406.2, Figure 11B-406.2.2**
51. The running slope of the curb ramp segments shall be in-line with the direction of sidewalk travel. Ramp runs shall have a running slope not steeper than 1:12 (8.33%). **§11B-406.3.1, Figure 11B-406.3.2**
52. A turning space 48 inches minimum by 48 inches minimum shall be provided at the bottom of the curb ramp. The slope of the turning space in all directions shall be 1:48 maximum (2.083%). **§11B-406.3.2**
53. Blended transition ramps hall have a running slope not steeper than 1:20 (5%). **§11B-406.4.1**
54. Curb ramps and the flared sides of curb ramps shall be located so that they do not project into vehicular traffic lanes, parking spaces, or parking access aisles. Curb ramps at marked crossings shall be wholly contained within the markings, excluding any flared sides. **§11B-406.5.1**
55. The clear width of curb ramp runs (excluding any flared sides), blended transitions, and turning spaces shall be 48 inches minimum. **§11B-406.5.2**
56. Landings shall be provided at the tops of curb ramps and blended transitions (parallel curb ramps shall not be required to comply). The landing clear length shall be 48 inches minimum. The landing clear width shall be at least as wide as the curb ramp, excluding any flared sides, or the blended transition leading to the landing. The slope of the landing in all directions shall be 1:48 (2.083%) maximum. **§11B-406.5.3**
57. Grade breaks at the top and bottom of curb ramp runs shall be perpendicular to the direction of the ramp run. Grade breaks shall not be permitted on the surface of ramp runs and turning spaces. Surface slopes that meet at grade breaks shall be flush. **§11B-406.5.6**
58. The cross slope of curb ramps and blended transitions shall be 1:48 (2.083%) maximum. **§11B-406.5.7**
59. Counter slopes of adjoining gutters and road surfaces immediately adjacent to and within 24 inches of the curb ramp shall not be steeper than 1:20 (5%). The adjacent surfaces at transitions at curb ramps to walks, gutters, and streets shall be at the same level. **§11B-406.5.8**
60. The bottom of diagonal curb ramps shall have a clear space 48 inches minimum outside active traffic lanes of the roadway. Diagonal curb ramps provided at marked crossings shall provide the 48 inches minimum clear space within the markings. **§11B-406.5.9**
61. Curb ramps and blended transitions shall have detectable warnings complying with 11B-705 Detectable Warnings. **§11B-406.5.12**
62. Raised islands in crossings shall be cut through level with the street or have curb ramps at both sides. The clear width of the accessible route at islands shall be 60 inches wide minimum. Where curb ramps are provided, they shall comply with 11B-406 Curb Ramps, Blended Transitions and Islands. Landings complying with 11B-406.5.3 Landings and the accessible route shall be permitted to overlap. Islands shall have detectable warnings complying with 11B-705 Detectable Warnings and Detectable Directional Texture. **§11B-406.6, Figure 11B-406.6**

D. GENERAL SITE AND BUILDING ELEMENTS

1. Where parking spaces are provided, accessible parking spaces shall be provided in number and kind required per Section 11B-208 Parking Spaces. **§11B-208.1**
2. Where passenger loading zones, drop-off zones, and/or bus stops are provided, accessible passenger loading zones, drop-off zones, and/or bus stops are required.

E. PLUMBING FIXTURES AND FACILITIES

DRINKING FOUNTAINS

1. Drinking fountains shall comply with Sections 11B-307 Protruding Objects and 11B-602 General Requirements. **§11B-602.1**
2. Units shall have a clear floor or ground space complying with Section 11B-305 Clear Floor or Ground Space positioned for a forward approach and centered on the unit. Knee and toe clearance complying with Section 11B-306 Knee and Toe Clearance shall be provided. **§11B-602.2**

3. Spout outlets shall be 36 inches maximum above the finish floor or ground. **§11B-602.4**
4. The spout shall be located 15 inches minimum from the vertical support and 5 inches maximum from the front edge of the unit, including bumpers. **§11B-602.5**
5. The spout shall provide a flow of water 4 inches high minimum and shall be located 5 inches maximum from the front of the unit. The angle of the water stream shall be measured horizontally relative to the front face of the unit. Where spouts are located less than 3 inches from the front of the unit, the angle of the water stream shall be 30 degrees maximum. Where spouts are located between 3 inches and 5 inches maximum from the front of the unit, the angle of the water stream shall be 15 degrees maximum. **§11B-602.6**
6. Spout outlets of drinking fountains for standing persons shall be 38 inches minimum and 43 inches maximum above the finish floor or ground. **§11B-602.7**
7. Wall and post-mounted cantilevered drinking fountains shall be 18 inches minimum and 19 inches maximum in depth. **§11B-602.8**
8. All drinking fountains shall either be located completely within alcoves, positioned completely between wing walls, or otherwise positioned so as not to encroach into pedestrian ways. The protected area within such a drinking fountain is located shall be 32 inches wide minimum and 18 inches deep minimum, and shall comply with Section 11B-305.7 Maneuvering Clearance. When used, wing walls or barriers shall protect horizontally at least as far as the drinking fountain and to within 6 inches vertically from the floor or ground surface. **§11B-602.9**

TOILET AND BATHING ROOM CLEARANCES

9. Doors to unisex toilet rooms and unisex bathing rooms shall have privacy latches. **§11B-213.2.1**
10. Mirrors located above the lavatories or countertops shall be installed within the bottom edge of the reflecting surface 40 inches maximum above the finish floor or ground. Mirrors not located above the lavatories or countertops shall be installed with the bottom edge of the reflecting surface 35 inches maximum above the finish floor or ground. **§11B-603.3**
11. Coat hooks shall be located within one of the reach ranges specified in Section 11B-308. Shelves shall be located 40 inches minimum and 48 inches maximum above the finish floor. Medicine cabinets shall be located in a usable shelf no higher than 44 inches maximum above the finish floor. **§11B-603.4**
12. Where towel or sanitary napkin dispensers, waste receptacles, or other accessories are provided in toilet facilities, at least one of each type shall be located on an accessible route. All operable parts, including coin slots, shall be 40 inches maximum above the finish floor. Baby changing stations are not required to comply with Section 11B-603.5 (See exception) **§11B-603.5**

WATER CLOSETS AND TOILET COMPARTMENTS

13. Flush controls shall be hand operated or automatic. Hand operated flush controls shall comply with Section 11B-309.4 Operation except they shall be located 44 inches maximum above the floor. Flush controls shall be located on the open side of the water closet except in ambulatory accessible compartments complying with Section 11B-604.8.2 Ambulatory Accessible Compartments. **§11B-604.6**
14. Toilet paper dispensers shall comply with Section 11B-309.4 Operation and shall be 7 inches minimum and 9 inches maximum in front of the water closet measured to the centerline of the dispenser. The outlet of the dispenser shall be below the grab bar, 19 inches minimum above the finish floor and shall not be located behind the grab bars. Dispensers shall not be of a type that control delivery or that does not allow continuous paper flow. **§11B-604.7**
15. Urinals shall be the stall-type or the wall-hung type with the rim 17 inches maximum above the finish floor or ground. Urinals shall be 13½ inches deep minimum measured from the outer face of the urinal rim to the back of the fixture. **§11B-605.2**
16. Flush controls shall be hand operated or automatic. Hand operated flush controls shall comply with Section 11B-309 Operable Parts except that the flush control shall be mounted at a maximum height of 44 inches above the finish floor. **§11B-605.4**
17. For lavatories and sinks, a clear floor space complying with Section 11B-305 Clear Floor or Ground Surfaces, positioned for a forward approach, and knee and toe clearance complying with Section 11B-306 Knee and Toe Clearance shall be provided. **§11B-606.2**

18. Lavatories and sinks shall be installed with the front of the higher of the rim or counter surface 34 inches maximum above the finish floor or ground. **§11B-606.3**

SIGNS RELATED TO TOILETS AND BATHING FACILITIES

19. Entrances leading to toilet rooms and bathing rooms complying with 11B-603 Toilet and Bathing Rooms shall be identified by a geometric symbol complying with 11B-703.7.2.6 Toilet and Bathing Room Geometric Symbols. Where existing toilet rooms or bathing rooms do not comply with 11B-603 Toilet and Bathing Rooms, directional signs indicating the location of the nearest compliant toilet room or bathing room within the facility shall be provided. Signs shall comply with 11B-703.5 Visual Characters and shall include the International Symbol of Accessibility complying with 11B-703.7.2.1 ISA. Where existing toilet rooms or bathing rooms do not comply with 11B-603 Toilet and Bathing Rooms, the toilet rooms or bathing rooms complying with 11B-603 Toilet and Bathing Rooms shall be identified by the International Symbol of Accessibility complying with 11B-703.7.2.1 ISA. Where clustered single user toilet rooms or bathing facilities are permitted to use exceptions to 11B-213.2 Toilet and Bathing Rooms, toilet rooms or bathing facilities complying with 11B-603 Toilet and Bathing Rooms shall be identified by the International Symbol of Accessibility complying with 11B-703.7.2.1 ISA unless all toilet rooms and bathing facilities comply with 11B-603 Toilet and Bathing Rooms. Existing buildings that have been remodeled to provide specific toilet rooms or bathing rooms for public use that comply with these building standards shall have the location of and the directions to these rooms posted in or near the building lobby or entrance on a sign complying with 11B-703.5 Visual Characters, including the International Symbol of Accessibility complying with 11B-703.7.2.1 ISA. **§11B-216.8**
20. Pictograms shall comply with the following:
    a. Pictograms shall have a field height of 6 inches minimum. Characters and Braille shall not be located in the pictogram field. **§11B-703.6.1**
    b. Pictograms and their field shall have a non-glare finish. Pictograms shall contrast with their field with either a light pictogram on a dark field or a dark pictogram on a light field. **§11B-703.6.2**
    c. Pictograms shall have text descriptors located directly below the pictogram field. Text descriptors shall comply with 11B-703.2 Raised Characters, 11B-703.3 Braille and 11B-703.4 Installation Height and Location. **§11B-703.6.3**
    d. The installation height and location of Pictogram signs shall be per **§11B-703.4.1.**
21. Symbols shall comply with the following:
    a. Doorways leading to toilet rooms and bathing rooms shall be identified by a geometric symbol complying with 11B-703.7.2.6 Toilet and Bathing Facilities Geometric Symbols. The symbol shall be mounted at 58 inches minimum and 60 inches maximum above the finish floor or ground surface measured from the centerline of the symbol. Where a door is provided the symbol shall be mounted within 1 inch of the vertical centerline of the door. **§11B-703.7.2.6 (See exception)**
    b. Men's toilet and bathing facilities shall be identified by an equilateral triangle, ¼ inch thick with edges 12 inches long and a vertex pointing upward. The triangle symbol shall contrast with the door, either light on a dark background or dark on a light background. **§11B-703.7.2.6.1**
    c. Women's toilet and bathing facilities shall be identified by a circle, ¼ inch thick and 12 inches in diameter. The circle symbol shall contrast with the door, either light on a dark background or dark on a light background. **§11B-703.7.2.6.2**
    d. Unisex toilet and bathing facilities shall be identified by a circle, ¼ inch thick and 12 inches in diameter with a ¼ inch thick triangle with a vertex pointing upward superimposed on the circle and within the 12-inch diameter. The triangle symbol shall contrast with the circle symbol, either light on a dark background or dark on a light background. The circle symbol shall contrast with the door, either light on a dark background or dark on a light background. **§11B-703.7.2.6.3**

WASHING MACHINE AND CLOTHES DRYERS

22. Washing machines and clothes dryer's operable parts must comply with Section 11B-309 Operable Parts. **§11B-611.3**
23. Top loading machines shall have the door to the laundry compartment located 36 inches maximum above the finish floor. Front loading machines shall have the bottom of the opening to the laundry compartment located 15 inches minim and 36 inches maximum above the finish floor. **§11B-611.4**

17. Two-way communication systems that are provided to gain admittance to a building or facility or to restricted areas within a building or facility shall provide both audible and visual signals. Handset cords, if provided, shall be 29 inches long minimum. **§11B-230.1, §11B-708**
18. Common use or public use system interface of communications systems between a residential dwelling unit and a site, building, or floor entrance shall include the capability of supporting voice and TTY communication with the residential dwelling unit interface. **§11B-708.4.1**
19. Residential dwelling unit system interface of communications systems between a residential dwelling unit and a site, building, or floor entrance shall include a telephone jack capable of supporting voice and TTY communication with the common use or public use system interface. **§11B-708.4.2**

TELEPHONES

20. Where coin-operated public pay telephones, coin less public pay telephones, public closed-circuit telephones, public courtesy phones, or other types of public telephones are provided, public telephones shall be provided in accordance with 11B-217 Telephones for each type of public telephone provided. For purposes of this section, a bank of telephones shall be considered to be two or more adjacent telephones. **§11B-217.1**
21. Except drive-up only public telephones, where public telephones are provided, wheelchair accessible telephones complying with 11B-704.2 shall be provided in accordance with Table 11B-217.2. **§11B-217.2**
22. All public telephones shall have volume controls complying with 11B-704.3. **§11B-217.3**
23. TTYs complying with 11B-704.4 shall be provided in accordance with 11B-217.4.
24. Where a bank of telephones in the interior of a building consists of three or more public pay telephones, at least one public pay telephone at the bank shall be provided with a shelf and an electrical outlet in accordance with 11B-704.5. **§11B-217.5 (See exception)**

F. COMMUNICATION ELEMENTS AND FEATURES

FIRE ALARM SYSTEMS

1. Where fire alarm systems and carbon monoxide alarm systems provide audible alarm coverage, alarms shall comply with 11B-215 Fire Alarm Systems. **§11B-215.1 (See exception)**
2. Alarms in public use areas and common use areas shall comply with 702 Chapter 9, Section 907.5.2.3.1. **§11B-215.2**
3. Where employee work areas have audible alarm coverage, the wiring system shall be designed so that visible alarms complying with 702 Chapter 9, Section 907.5.2.3.2 can be integrated into the alarm system. **§11B-215.3**
4. Fire alarm systems shall have permanently installed audible and visible alarms complying with NFPA 72 (1999 or 2002 edition) (incorporated by reference, see "Referenced Standards" in Chapter 1), except that the maximum allowable sound level of audible notification appliances complying with section 4-3.2.1 of NFPA 72 (1999 edition) shall have a sound level no more than 110 dB at the minimum hearing distance from the audible appliance. In addition, alarms in guest rooms required to provide communication features shall comply with sections 4-3 and 4-4 of NFPA 72 (1999 edition) or sections 7.4 and 7.5 of NFPA 72 (2002 edition). and Chapter 9, Sections 907.5.2.1 and 907.5.2.3. **§11B-702.1**

ASSISTIVE LISTENING SYSTEMS

5. Assistive listening systems shall be provided in assembly areas, including conference and meeting rooms, used for the purpose of entertainment, educational or civic gatherings, or similar purposes. **§202, §11B-219.2**

   Note: Assembly areas include, but are not limited to, classrooms, lecture halls, courtrooms, public meeting rooms, public hearing rooms, legislative chambers, motion picture houses, auditoria, theaters, playhouses, dinner theaters, concert halls, centers for the performing arts, amphitheaters, arenas, stadiums, grandstands, or convention centers. **§202, §11B-219.2**
6. Assistive listening system shall provide an amplification system utilizing transmitters, receivers, and coupling devices to bypass the acoustical space between a sound source and a listener by means of induction loop, radio frequency, infrared, or direct-wired equipment. **§202**
7. Where a building contains more than one assembly area under one management, the total number of required receivers may be calculated using the total number of seats in the assembly areas provided that all receivers are usable with all systems. **§11B-219.3 (See exception)**
8. Twenty-five percent minimum of receivers provided for assistive listening systems, but no fewer than two, shall be hearing-aid compatible with except when all seats in an assembly area are served by means of an induction loop. **§11B-219.3**
9. When assistive-listening systems are limited to specific areas or seats, such areas or seats shall be within a 50-foot viewing distance of the stage or playing area and shall have a complete view of the stage or playing area. **§11B-219.4**
10. Permanently installed assistive-listening systems are required in areas if (1) they have fixed seating and (2a) they accommodate at least 50 persons or (2b) they have audio-amplification systems, except those used exclusively for paging and/or background music. **§11B-219.2, §11B-219.5**
11. Portable assistive-listening systems may serve more than one conference or meeting rooms if an adequate number of electrical outlets or other supplementary wiring is provided and permanently installed systems are not required. **§11B-219.5**
12. Receivers required for use with an assistive listening system shall include a 1/8 inch standard mono jack. **§11B-706.2**
13. Receivers required to be hearing aid compatible shall interface with telecoils in hearing aids through the provision of neck loops. **§11B-706.3**
14. Assistive listening systems shall be capable of providing a sound pressure level from 110 – 118 dB with a dynamic range on the volume control of 50 dB. **§11B-706.4**
15. Signal-to-noise ratio for internally generated noise in assistive listening systems shall be 18 dB minimum. **§11B-706.5**
16. Peak clipping shall not exceed 18 dB of clipping relative to the peaks of speech. **§11B-706.6**

**TWO-WAY COMMUNICATION SYSTEM

SITE IMPROVEMENT PLANS
FOR
COMMUNITY AQUATICS & SENIOR CENTER
1654 W. 160TH ST.
GARDENA, CA
COUNTY OF LOS ANGELES
STATE OF CALIFORNIA

GENERAL NOTES:

1. ALL GRADING AND CONSTRUCTION SHALL CONFORM TO THE CITY OF GARDENA BUILDING CODE AND THE 2019 CALIFORNIA BUILDING CODE OR LATEST ADOPTED EDITION AND UNLESS SPECIFICALLY NOTED ON THESE PLANS.
2. ANY MODIFICATIONS OF OR CHANGES TO APPROVED GRADING PLANS MUST BE APPROVED BY THE BUILDING OFFICIAL.
3. NO GRADING SHALL BE STARTED WITHOUT FIRST NOTIFYING THE BUILDING OFFICIAL A PRE-GRADING MEETING AT THE SITE IS REQUIRED BEFORE THE START OF THE GRADING WITH THE FOLLOWING PEOPLE PRESENT: OWNER, GRADING CONTRACTOR, DESIGN CIVIL ENGINEER, SOILS ENGINEER, GEOLOGIST, COUNTY GRADING INSPECTOR(S) OR THEIR REPRESENTATIVES, AND WHEN REQUIRED THE ARCHEOLOGIST OR OTHER JURISDICTIONAL AGENCIES. PERMITTEE OR HIS AGENT ARE RESPONSIBLE FOR ARRANGING PRE-GRADE MEETING AND MUST NOTIFY THE BUILDING OFFICIAL AT LEAST TWO BUSINESS DAYS PRIOR TO PROPOSED PRE-GRADE MEETING.
4. APPROVAL OF THESE PLANS REFLECT SOLELY THE REVIEW OF PLANS IN ACCORDANCE WITH THE COUNTY OF LOS ANGELES BUILDING CODES AND DOES NOT REFLECT ANY POSITION BY THE COUNTY OF LOS ANGELES OR THE DEPARTMENT OF PUBLIC WORKS REGARDING THE STATUS OF ANY TITLE ISSUES RELATING TO THE LAND ON WHICH THE IMPROVEMENTS MAY BE CONSTRUCTED. ANY DISPUTES RELATING TO TITLE ARE SOLELY A PRIVATE MATTER NOT INVOLVING THE COUNTY OF LOS ANGELES OR THE DEPARTMENT OF PUBLIC WORKS.
5. ALL GRADING AND CONSTRUCTION ACTIVITIES SHALL COMPLY WITH COUNTY OF LOS ANGELES CODE, TITLE 12, SECTION 12.12.030 THAT CONTROLS AND RESTRICTS NOISE FROM THE USE OF CONSTRUCTION AND GRADING EQUIPMENT FROM THE HOURS OF 8:00 PM TO 6:30 AM, AND ON SUNDAYS AND HOLIDAYS. (MORE RESTRICTIVE CONSTRUCTION ACTIVITY TIMES MAY GOVERN, AS REQUIRED BY THE DEPARTMENT OF REGIONAL PLANNING AND SHOULD BE SHOWN ON THE GRADING PLANS WHEN APPLICABLE.)
6. CALIFORNIA PUBLIC RESOURCES CODE (SECTION 5097.98) AND HEALTH AND SAFETY CODE (SECTION 7050.5) ADDRESS THE DISCOVERY AND DISPOSITION OF HUMAN REMAINS. IN THE EVENT OF DISCOVERY OR RECOGNITION OF ANY HUMAN REMAINS IN ANY LOCATION OTHER THAN A DEDICATED CEMETERY, THE LAW REQUIRES THAT GRADING IMMEDIATELY STOPS AND NO FURTHER EXCAVATION OR DISTURBANCE OF THE SITE, OR ANY NEARBY AREA WHERE HUMAN REMAINS MAY BE LOCATED, OCCUR UNTIL THE FOLLOWING HAS BEEN MEASURES HAVE BEEN TAKEN:
   a. THE COUNTY CORONER HAS BEEN INFORMED AND HAS DETERMINED THAT NO INVESTIGATION OF THE CAUSE OF DEATH IS REQUIRED, AND
   b. IF THE REMAINS ARE OF NATIVE AMERICAN ORIGIN, THE DESCENDANTS FROM THE DECEASED NATIVE AMERICANS HAVE MADE A RECOMMENDATION FOR THE MEANS OF TREATING OR DISPOSING, WITH APPROPRIATE DIGNITY, OF THE HUMAN REMAINS AND ANY ASSOCIATED GRAVE GOODS.
7. THE LOCATION AND PROTECTION OF ALL UTILITIES IS THE RESPONSIBILITY OF THE PERMITTEE.
8. ALL EXPORT OF MATERIAL FROM THE SITE MUST GO TO A PERMITTED SITE APPROVED BY THE BUILDING OFFICIAL OR A LEGAL DUMPSITE. RECEIPTS FOR ACCEPTANCE OF EXCESS MATERIAL BY A DUMPSITE ARE REQUIRED AND MUST BE PROVIDED TO THE BUILDING OFFICIAL UPON REQUEST.
9. A COPY OF THE GRADING PERMIT AND APPROVED GRADING PLANS MUST BE IN THE POSSESSION OF A RESPONSIBLE PERSON AND AVAILABLE AT THE SITE AT ALL TIMES.
10. SITE BOUNDARIES, EASEMENTS, DRAINAGE DEVICES, RESTRICTED USE AREAS SHALL BE LOCATED PER CONSTRUCTION STAKING BY FIELD ENGINEER OR LICENSED SURVEYOR. PRIOR TO GRADING, AS REQUESTED BY THE BUILDING OFFICIAL, ALL PROPERTY LINES, EASEMENTS, AND RESTRICTED USE AREAS SHALL BE STAKED.
11. NO GRADING OR CONSTRUCTION SHALL OCCUR WITHIN THE PROTECTED ZONE OF ANY OAK TREE AS REQUIRED PER TITLE CHAPTER 22.56 OF THE COUNTY OF LOS ANGELES ZONING CODE. THE PROTECTED ZONE SHALL MEAN THAT AREA WITHIN THE DRIP LINE OF AN OAK TREE EXTENDING THERE FROM A POINT AT LEAST FIVE FEET OUTSIDE THE DRIP LINE, OR 15 FEET FROM THE TRUNK(S) OF A TREE, WHICHEVER IS GREATER.

    IF AN OAK TREE PERMIT IS OBTAINED: (ADD THE FOLLOWING NOTE:)

    ALL GRADING AND CONSTRUCTION WITHIN THE PROTECTED ZONE OF ALL OAK TREES SHALL BE PER OAK TREE PERMIT NO. . ALL RECOMMENDATIONS IN THE PERMIT AND ASSOCIATED OAK TREE REPORT MUST BE COMPLIED WITH AND ARE A PART OF THE GRADING PLAN. A COPY OF THE OAK TREE PERMIT AND ASSOCIATED REPORTS SHALL BE MAINTAINED IN THE POSSESSION OF A RESPONSIBLE PERSON AND AVAILABLE AT THE SITE AT ALL TIMES.
12. THE STANDARD RETAINING WALL DETAILS SHOWN ON THE GRADING PLANS ARE FOR REFERENCE ONLY. STANDARD RETAINING WALLS ARE NOT CHECKED, PERMITTED, OR INSPECTED PER THE GRADING PERMIT. A SEPARATE RETAINING WALL PERMIT IS REQUIRED FOR ALL STANDARD RETAINING WALLS.

    NOTE: THIS NOTE ONLY APPLIES TO STANDARD RETAINING WALLS. GEOGRID FABRIC AND SEGMENTAL RETAINING WALLS DO NOT REQUIRE A SEPARATE RETAINING WALL PERMIT. DETAILS AND CONSTRUCTION NOTES FOR ALL GEOGRID WALLS MUST BE ON THE GRADING PLAN.
13. A PREVENTIVE PROGRAM TO PROTECT THE SLOPES FROM POTENTIAL DAMAGE FROM BURROWING RODENTS IS REQUIRED PER SECTION J101.8 OF THE COUNTY OF LOS ANGELES BUILDING CODE. OWNER IS TO INSPECT SLOPES PERIODICALLY FOR EVIDENCE OF BURROWING RODENTS AND A FIRST EVIDENCE OF THEIR EXISTENCE SHALL EMPLOY AN EXTERMINATOR FOR THEIR REMOVAL.
14. WHERE A GRADING PERMIT IS ISSUED AND THE BUILDING OFFICIAL DETERMINES THAT THE GRADING WILL NOT BE COMPLETED PRIOR TO NOVEMBER 1, THE OWNER OF THE SITE ON WHICH THE GRADING IS BEING PERFORMED SHALL, ON OR BEFORE OCTOBER 1, FILE OR CAUSE TO BE FILED WITH THE BUILDING OFFICIAL AN ESCP PER SECTION J110.8.3 OF THE COUNTY OF LOS ANGELES BUILDING CODE.
15. TRANSFER OF RESPONSIBILITY: IF THE FIELD ENGINEER, THE SOILS ENGINEER, OR THE ENGINEERING GEOLOGIST OF RECORD IS CHANGED DURING GRADING, THE WORK SHALL BE STOPPED UNTIL THE REPLACEMENT HAS AGREED IN WRITING TO ACCEPT THEIR RESPONSIBILITY WITHIN THE AREA OF TECHNICAL COMPETENCE FOR APPROVAL UPON COMPLETION OF THE WORK. IT SHALL BE THE DUTY OF THE PERMITTEE TO NOTIFY THE BUILDING OFFICIAL IN WRITING OF SUCH CHANGE PRIOR TO THE RECOMMENCEMENT OF SUCH GRADING.

GENERAL GEOTECHNICAL NOTES

16. ALL WORK MUST BE IN COMPLIANCE WITH THE RECOMMENDATIONS INCLUDED IN THE GEOTECHNICAL CONSULTANT'S REPORT(S) AND THE APPROVED PLANS AND SPECIFICATIONS.
17. GRADING OPERATIONS MUST BE CONDUCTED UNDER PERIODIC INSPECTIONS BY THE GEOTECHNICAL CONSULTANTS AS REQUIRED BY THE CITY OF GARDENA.
18. THE SOIL ENGINEER SHALL PROVIDE SUFFICIENT INSPECTIONS DURING THE PREPARATION OF THE NATURAL GROUND AND THE PLACEMENT AND COMPACTION OF THE FILL TO BE SATISFIED THAT THE WORK IS BEING PERFORMED IN ACCORDANCE WITH THE PLAN AND APPLICABLE CODE REQUIREMENTS.
19. ROUGH GRADING MUST BE APPROVED BY A FINAL ENGINEERING GEOLOGY AND SOILS ENGINEERING REPORT. AN AS-BUILT GEOLOGIC MAP MUST BE INCLUDED IN THE FINAL GEOLOGY REPORT. PROVIDE A FINAL REPORT STATEMENT THAT VERIFIES WORK WAS DONE IN ACCORDANCE WITH REPORT RECOMMENDATIONS AND CODE PROVISIONS (SECTION J105.12 OF THE COUNTY OF LOS ANGELES BUILDING CODE). THE FINAL REPORT(S) MUST BE SUBMITTED TO THE CITY OF GARDENA FOR REVIEW AND APPROVAL.
20. ALL REQUIRED THIRD-PARTY TESTING TO BE PROVIDED AT CONTRACTORS EXPENSE.

FILL NOTES

21. GRADING WORK IS TO ONLY FOLLOW THE DEMOLITION RECOMMENDATIONS IN THE SOILS REPORT.
    a. OVEREXCAVATION AND PREP. FOR THE FUTURE BUILDING PAD IS NOT REQUIRED FOR ROUGH GRADING.

21. ALL FILL SHALL BE COMPACTED TO THE FOLLOWING MINIMUM RELATIVE COMPACTION CRITERIA:
    a. 90 PERCENT OF MAXIMUM DRY DENSITY WITHIN 40 FEET BELOW FINISH GRADE.
    b. 93 PERCENT OF MAXIMUM DRY DENSITY DEEPER THAN 40 FEET BELOW FINISH GRADE, UNLESS A LOWER RELATIVE COMPACTION (NOT LESS THAN 90 PERCENT OF MAXIMUM DRY DENSITY) IS JUSTIFIED BY THE GEOTECHNICAL ENGINEER.

    THE RELATIVE COMPACTION SHALL BE DETERMINED BY A.S.T.M. SOIL COMPACTION TEST D1557-91 WHERE APPLICABLE: WHERE NOT APPLICABLE, A TEST ACCEPTABLE TO THE BUILDING OFFICIAL SHALL BE USED. (SECTION J107.5 OF THE COUNTY OF LOS ANGELES BUILDING CODE.)
22. FIELD DENSITY SHALL BE DETERMINED BY A METHOD ACCEPTABLE TO THE BUILDING OFFICIAL. (SECTION J107.5 OF THE COUNTY OF LOS ANGELES BUILDING CODE.) HOWEVER, NOT LESS THAN 10% OF THE REQUIRED DENSITY TEST, UNIFORMLY DISTRIBUTED, AND SHALL BE OBTAINED BY THE SAND CONE METHOD.
23. SUFFICIENT TESTS OF THE FILL SOILS SHALL BE MADE TO DETERMINE THE RELATIVE COMPACTION OF THE FILL IN ACCORDANCE WITH THE FOLLOWING MINIMUM GUIDELINES:
    a. ONE TEST FOR EACH TWO-FOOT VERTICAL LIFT.
    b. ONE TEST FOR EACH 1,000 CUBIC YARDS OF MATERIAL PLACED.
    c. ONE TEST AT THE LOCATION OF THE FINAL FILL SLOPE FOR EACH BUILDING SITE (LOT) IN EACH FOUR-FOOT VERTICAL LIFT OR PORTION THEREOF.
    d. ONE TEST IN THE VICINITY OF EACH BUILDING PAD FOR EACH FOUR-FOOT VERTICAL LIFT OR PORTION THEREOF.
24. SUFFICIENT TESTS OF FILL SOILS SHALL BE MADE TO VERIFY THAT THE SOIL PROPERTIES COMPLY WITH THE DESIGN REQUIREMENTS, AS DETERMINED BY THE SOIL ENGINEER INCLUDING SOIL TYPES, SHEAR STRENGTHS PARAMETERS AND CORRESPONDING UNIT WEIGHTS IN ACCORDANCE WITH THE FOLLOWING GUIDELINES:
    a. PRIOR AND SUBSEQUENT TO PLACEMENT OF THE FILL, SHEAR TESTS SHALL BE TAKEN ON EACH TYPE OF SOIL OR SOIL MIXTURE TO BE USED FOR ALL FILL SLOPES STEEPER THAN THREE (3) HORIZONTAL TO ONE VERTICAL.
    b. SHEAR TEST RESULTS FOR THE PROPOSED FILL MATERIAL MUST MEET OR EXCEED THE DESIGN VALUES USED IN THE GEOTECHNICAL REPORT TO DETERMINE SLOPE STABILITY REQUIREMENTS. OTHERWISE, THE SLOPE MUST BE REEVALUATED USING THE ACTUAL SHEAR TEST VALUE OF THE FILL MATERIAL THAT IS IN PLACE.
    c. FILL SOILS SHALL BE FREE OF DELETERIOUS MATERIALS.
25. FILL SHALL NOT BE PLACED UNTIL STRIPPING OF VEGETATION, REMOVAL OF UNSUITABLE SOILS, AND INSTALLATION OF SUBDRAIN (IF ANY) HAVE BEEN INSPECTED AND APPROVED BY THE SOIL ENGINEER. THE BUILDING OFFICIAL MAY REQUIRE A "STANDARD TEST METHOD FOR MOISTURE, ASH, ORGANIC MATTER, PEAT OR OTHER ORGANIC SOILS" ASTM D-2974-87 ON ANY SUSPECT MATERIAL. DETRIMENTAL AMOUNTS OF ORGANIC MATERIAL SHALL NOT BE PERMITTED IN FILLS. SOIL CONTAINING SMALL AMOUNTS OF ROOTS MAY BE ALLOWED PROVIDED THAT THE ROOTS ARE IN A QUANTITY AND DISTRIBUTED IN A MANNER THAT WILL NOT BE DETRIMENTAL TO THE FUTURE USE OF THE SITE AND THE SOILS ENGINEER APPROVES THE USE OF SUCH MATERIAL.
26. ROCK OR SIMILAR MATERIAL GREATER THAN 12 INCHES IN DIAMETER SHALL NOT BE PLACED IN THE FILL UNLESS RECOMMENDATIONS FOR SUCH PLACEMENT HAVE BEEN SUBMITTED BY THE SOIL ENGINEER AND APPROVED IN ADVANCE BY THE BUILDING OFFICIAL. LOCATION, EXTENT, AND ELEVATION OF ROCK DISPOSAL AREAS MUST BE SHOWN ON AN "AS BUILT" GRADING PLAN.
27. CONTINUOUS INSPECTION BY THE SOIL ENGINEER, OR A RESPONSIBLE REPRESENTATIVE, SHALL BE PROVIDED DURING ALL FILL PLACEMENT AND COMPACTION OPERATIONS WHERE FILLS HAVE A DEPTH GREATER THAN 30 FEET OR SLOPE SURFACE STEEPER THAN 2:1. (SECTION J107.8 OF THE COUNTY OF LOS ANGELES BUILDING CODE)
28. CONTINUOUS INSPECTION BY THE SOIL ENGINEER, OR A RESPONSIBLE REPRESENTATIVE, SHALL BE PROVIDED DURING ALL SUBDRAIN INSTALLATION. (PER THE CITY OF GARDENA BUILDING CODE)
29. FILL SLOPES IN EXCESS OF 2:1 STEEPNESS RATIO ARE TO BE CONSTRUCTED BY THE PLACEMENT OF SOIL AT SUFFICIENT DISTANCE BEYOND THE PROPOSED FINISH SLOPE TO ALLOW COMPACTION EQUIPMENT TO BE OPERATED AT THE OUTER LIMITS OF THE FINAL SLOPE SURFACE. THE EXCESS FILL IS TO BE REMOVED PRIOR TO COMPLETION OF ROUGH GRADING. OTHER CONSTRUCTION PROCEDURES MAY BE USED WHEN IT IS DEMONSTRATED TO THE SATISFACTION OF THE BUILDING OFFICIAL THAT THE ANGLE OF SLOPE, CONSTRUCTION METHOD AND OTHER FACTORS WILL HAVE EQUIVALENT EFFECT. (SECTION J107.5 OF THE COUNTY OF LOS ANGELES BUILDING CODE.)

GENERAL

1. ALL PROPERTY CORNERS SHALL BE CLEARLY DELINEATED IN THE FIELD PRIOR TO COMMENCEMENT OF ANY CONSTRUCTION/GRADING.
2. ALL WORK UNDER THIS GRADING PERMIT SHALL BE LIMITED TO WORK WITHIN THE PROPERTY LINES. ALL WORK WITHIN THE ROAD RIGHT-OF-WAY WILL REQUIRE SEPARATE PLANS AND AN ENCROACHMENT PERMIT.
3. GRADING SHALL BE DONE UNDER THE SUPERVISION OF A SOIL ENGINEER IN CONFORMANCE WITH RECOMMENDATIONS OF GEOTECHNICAL INVESTIGATION PROPOSED COMMUNITY AQUATIC AND SENIOR CENTER BY SOUTHERN CALIFORNIA GEOTECHNICAL, INC. DATED NOVEMBER 18, 2021 AND RESULTS OF INFILTRATION TESTING BY SOUTHERN CALIFORNIA GEOTECHNICAL DATED NOVEMBER 19, 2021. THESE REPORTS ARE A PART OF THESE PLANS.
4. COMPACTED FILL TO SUPPORT ANY STRUCTURES SHALL COMPLY WITH SECTION 1803.5 CBC. PROJECTS WITHOUT PRELIMINARY SOILS REPORT SHALL HAVE DETAILED SPECIFICATIONS SATISFYING REQUIREMENTS IN SECTION 1803.5 CBC PREPARED BY THE EOR.
5. THE CONTRACTOR SHALL NOTIFY BUILDING AND SAFETY AT LEAST 24 HOURS IN ADVANCE TO REQUEST FINISHED LOT GRADE AND DRAINAGE INSPECTION. THIS INSPECTION MUST BE APPROVED PRIOR TO BUILDING PERMIT FINAL INSPECTION FOR EACH LOT.

DRAINAGE AND EROSION/DUST CONTROL

6. DRAINAGE ACROSS THE PROPERTY LINE SHALL NOT EXCEED THAT WHICH EXISTED PRIOR TO GRADING. EXCESS OR CONCENTRATED DRAINAGE SHALL BE CONTAINED ON SITE OR DIRECTED TO AN APPROVED DRAINAGE FACILITY.
7. THE GROUND IMMEDIATELY ADJACENT TO THE BUILDING FOUNDATION SHALL BE SLOPED AWAY WITH 2% MINIMUM FOR A MINIMUM DISTANCE OF 10 HORIZONTAL FEET. SWALES WITHIN 10 FEET FROM BUILDING SHALL HAVE 2% MINIMUM SLOPE.
8. NO OBSTRUCTION OF NATURAL WATER COURSES SHALL BE PERMITTED.
9. DURING ROUGH GRADING OPERATIONS AND PRIOR TO CONSTRUCTION OF PERMANENT DRAINAGE STRUCTURES, TEMPORARY DRAINAGE CONTROL (BEST MANAGEMENT PRACTICES, BMP'S) SHALL BE PROVIDED TO PREVENT PONDING WATER AND DAMAGE TO ADJACENT PROPERTIES.
10. DUST SHALL BE CONTROLLED BY WATERING OR OTHER APPROVED METHODS.
11. ALL EXISTING DRAINAGE COURSES ON THE PROJECT SITE MUST CONTINUE TO FUNCTION. PROTECTIVE MEASURES AND TEMPORARY DRAINAGE PROVISIONS MUST BE USED TO PROTECT ADJOINING PROPERTIES DURING GRADING OPERATIONS.

COMPLETION OF WORK

12. A REGISTERED CIVIL ENGINEER SHALL PREPARE FINAL COMPACTION REPORT/GRADING REPORT AND IT SHALL BE SUBMITTED FOR REVIEW AND APPROVAL. THE REPORT SHALL ALSO PROVIDE BUILDING FOUNDATION DESIGN PARAMETERS INCLUDING ALLOWABLE SOIL PRESSURES, EXPANSION INDEX AND REMEDIAL MEASURES IF EI>20, WATER SOLUBLE SULFATE CONTENT, CORROSIVITY AND REMEDIAL MEASURES IF NECESSARY.
13. THE COMPACTION REPORT SHALL INCLUDE THE SPECIAL INSPECTION VERIFICATIONS LISTED IN TABLE 1704.7 OF THE CALIFORNIA BUILDING CODE.
14. A REGISTERED CIVIL ENGINEER SHALL SUBMIT TO BUILDING AND SAFETY WRITTEN CERTIFICATION OF COMPLETION OF GRADING IN ACCORDANCE WITH THE APPROVED GRADING PLAN PRIOR TO REQUESTING INSPECTION AND ISSUANCE OF THE BUILDING PERMIT. CERTIFICATION SHALL INCLUDE LINE GRADE, SURFACE DRAINAGE, ELEVATION, AND LOCATION OF PERMITTED GRADING ON THE LOT.

CONSTRUCTION NOTES/ESTIMATE OF QUANTITIES

NO.	DESCRIPTION	QUANTITY
	GENERAL CONSTRUCTION NOTES	SEE BID SCHEDULE
1	CONSTRUCT 3" A.C. OVER 6" A.B. PAVEMENT OVER 12" COMPACTED SUBGRADE (PARKING STALLS) - VERIFY WITH SOILS ENGINEER	
2	CONSTRUCT CONCRETE SURFACE PER LANDSCAPE ARCHITECT PLANS	
3	CONSTRUCT CURB PER CITY STD. ST-7, TYPE C-4, C.F. PER PLAN	
4	CONSTRUCT 6" CURB & GUTTER PER CITY STD. ST-7, TYPE C-2, C.F. PER PLAN, MODIFY FOR 2' WIDE GUTTER TO MATCH EXIST.	
5	CONSTRUCT CURB FACE TRANSITION PER DETAIL 1, SHEET C-0.02	
6	CONSTRUCT ADA CURB RAMP PER CALTRANS DRAWING A88A, CASE A AND DETAIL B	
7	CONSTRUCT FULL-DEPTH A.C. PAVEMENT PER DETAIL 2, SHEET C-0.02	
8	CONSTRUCT 3' WIDE V-GUTTER PER DETAIL 3, SHEET C-0.02	
9	RECONSTRUCT NORTHERLY SECTION OF EXISTING DRIVEWAY PER CITY STD. ST-2	
10	PROTECT IN PLACE	
11	CONSTRUCT MOUNTABLE 6" CURB & GUTTER PER SPPWC STD. PLAN 121-3, TYPE B2-6, C.F. PER PLAN, MODIFY FOR 2' WIDE GUTTER TO MATCH EXIST.	
12	CONSTRUCT TRANSITION FROM MOUNTABLE CURB & GUTTER TO STANDARD CURB & GUTTER	
13	CONSTRUCT ADA CURB RAMP PER CALTRANS DRAWING A88A, CASE C WITHOUT RETAINING CURB AT BACK	
14	CONSTRUCT ADA CURB RAMP PER CALTRANS DRAWING A88A, CASE G	
	STORM DRAIN CONSTRUCTION NOTES	
30	CONSTRUCT ATRIUM DRAIN PER DETAIL 4, SHEET C-0.02	
31	CONSTRUCT BRASS DECK DRAIN PER DETAIL 5, SHEET C-0.02	
32	CONSTRUCT 4" PVC, SDR 35, STORM DRAIN PIPE, BEDDING DETAIL 6, SHEET C-0.02	
33	CONSTRUCT 8" PVC, SDR 35, STORM DRAIN PIPE, BEDDING DETAIL 6, SHEET C-0.02	
34	CONSTRUCT 12" PVC, SCH 80, STORM DRAIN PIPE, BEDDING DETAIL 6, SHEET C-0.02	
35	CONSTRUCT STORM DRAIN CLEAN OUT PER DETAIL 7, SHEET C-0.02	
36	CONSTRUCT CDS UNIT PER DETAIL 2, SHEET C-0.04	
37	CONSTRUCT PERFORATED UNDERGROUND INFILTRATION SYSTEM PER DETAIL 1, SHEET C-0.03	
38	CONNECT TO ROOF DRAIN - SEE ARCHITECT'S PLANS	
39	CONSTRUCT CURB DRAIN PER SPPWC STANDARD PLAN 150-4, N = 2	
40	CONSTRUCT LID FLOW CONTROL CATCH BASIN PER DETAIL 1, SHEET C-0.04	
41	CONSTRUCT SUBDRAIN PER DETAIL 11, SHEET C-0.02	
42	CONNECT SUBDRAIN TO STORM DRAIN LINE	
	SEE SHEET D-1.01 FOR DEMOLITION NOTES	
	SEE SHEET C-2.01 FOR WATER/SEWER CONSTRUCTION NOTES	
	SEE SHEET C-3.01 FOR EROSION CONTROL CONSTRUCTION NOTES	
	SEE SHEET C-4.01 FOR HORIZONTAL CONTROL/STRIPING CONSTRUCTION NOTES	

NOTICE TO CONTRACTOR:

THE ESTIMATES OF IMPROVEMENT AND GRADING QUANTITIES AS SHOWN HEREON ARE PROVIDED FOR SATISFYING PLAN CHECK INFORMATION REQUIREMENTS ONLY. THE CONTRACTOR SHALL PERFORM AN INDEPENDENT ESTIMATE OF ALL IMPROVEMENT QUANTITIES, INCLUDING GRADING QUANTITIES, AND SHALL USE SAME AS A BASIS FOR THEIR BID(S) AND CONTRACT(S).

NOTICE TO CONTRACTOR

CAUTION: THE ENGINEER PREPARING THESE PLANS WILL NOT BE RESPONSIBLE FOR, OR LIABLE FOR, UNAUTHORIZED CHANGES TO, OR USES OF THESE PLANS. ALL CHANGES TO THE PLANS MUST BE IN WRITING, AND MUST BE APPROVED BY THE PREPARER OF THESE PLANS.

THE EXISTENCE AND LOCATION OF ANY UNDERGROUND UTILITY FACILITIES SHOWN ON THESE PLANS WERE OBTAINED BY A SEARCH OF AVAILABLE RECORDS. THE LOCATIONS SHOWN ARE APPROXIMATE AND SHALL BE CONFIRMED IN THE FIELD BY THE CONTRACTOR. THE CONTRACTOR SHALL BE RESPONSIBLE FOR MAKING ANY NECESSARY ADJUSTMENTS TO ALIGNMENT AND/OR GRADE OF THE PROPOSED IMPROVEMENTS. THE CONTRACTOR IS REQUIRED TO TAKE DUE PRECAUTIONARY MEASURES TO PREVENT DAMAGE TO ANY UTILITY FACILITIES SHOWN AND ANY OTHER FACILITIES NOT SHOWN ON THESE PLANS.

ALL CONTRACTORS AND SUBCONTRACTORS PERFORMING WORK SHOWN ON THESE PLANS AGREE THAT, IN ACCORDANCE WITH GENERALLY ACCEPTED CONSTRUCTION PRACTICES, THEY WILL BE REQUIRED TO ASSUME SOLE AND COMPLETE RESPONSIBILITY FOR JOB SITE CONDITIONS DURING THE COURSE OF CONSTRUCTION OF THE PROJECT. THIS INCLUDES PROVIDING FOR THE SAFETY OF ALL PERSONS AND PROPERTY AND SHALL APPLY CONTINUOUSLY AND NOT BE LIMITED TO NORMAL WORKING HOURS. THE CONTRACTORS AND SUBCONTRACTORS FURTHER AGREE TO DEFEND, INDEMNIFY AND HOLD HARMLESS THE OWNER AND DESIGN PROFESSIONAL FROM ANY AND ALL LIABILITY, REAL OR ALLEGED, IN CONNECTION WITH THE PERFORMANCE OF WORK ON THIS PROJECT, EXCEPT FOR LIABILITY ARISING FROM THE SOLE NEGLIGENCE OF THE OWNER OR THE DESIGN PROFESSIONAL.

EXISTING UNDERGROUND STRUCTURES

THE EXISTENCE AND LOCATION OF ANY UNDERGROUND PIPES OR CONDUITS SHOWN ON THESE PLANS ARE OBTAINED BY A SEARCH OF THE AVAILABLE RECORDS. TO THE BEST OF OUR KNOWLEDGE, THERE ARE NO EXISTING UTILITIES EXCEPT AS SHOWN ON THESE PLANS. THE CONTRACTOR IS REQUIRED TO TAKE THE PRECAUTIONARY MEASURES TO PROTECT THE UTILITY LINES SHOWN AND ANY OTHER LINES NOT OF RECORD OR NOT SHOWN ON THESE PLANS. IT SHALL BE THE CONTRACTOR'S RESPONSIBILITY TO NOTIFY THE OWNERS OF THE UTILITIES OR STRUCTURES CONCERNED BEFORE STARTING WORK. CONTRACTOR FURTHER ASSUMES ALL LIABILITY AND RESPONSIBILITY FOR THE UNDERGROUND UTILITY PIPES, CONDUITS OR STRUCTURES SHOWN OR NOT SHOWN ON THESE PLANS; LOCATE ALL UTILITIES BEFORE CONSTRUCTION.

LEGEND

	PROPERTY LINE	B.O.W.	BACK OF WALK
	GRADING LIMITS	BLDG.	BUILDING
40	EXISTING CONTOUR	C.B.	CATCH BASIN
		C.L.F.	CHAIN LINK FENCE
40.2	EXISTING SPOT ELEVATION	C&G	CURB & GUTTER
		C.L.	CENTERLINE
	PROPOSED SLOPE	C.O.	CLEANOUT
		CONC.	CONCRETE
		D.G.	DECOMPOSED GRANITE
12"W	EXISTING UTILITY LINE (TYPE AND SIZE AS NOTED)	DWY.	DRIVEWAY
		D.F.	DRINKING FOUNTAIN
		ELEC.	ELECTRIC
GB	GRADE BREAK LINE	E.P.	EDGE OF PAVEMENT
		F.F.	FINISHED FLOOR
	FLOWLINE	F.H.	FIRE HYDRANT
		F.L.	FLOWLINE
		F.S.	FINISHED SURFACE
	FLOW DIRECTION	G.B.	GRADE BREAK
		H.C.	HANDICAP
	STORM DRAIN & GRATE	H.P.	HIGH POINT
	STORM DRAIN AND CLEANOUT	INV.	INVERT
		IRR. OR IRRIG.	IRRIGATION
	STREET LIGHT	L.P.	LOW POINT
		M.H.	MANHOLE
	VALVE	P/A	PLANTER AREA
		P.P.	POWER POLE
		P.O.C.	POINT OF CONNECTION
	FIRE HYDRANT	R.D.	ROOF DRAIN
		R.O.W.	RIGHT OF WAY
		SD	STORM DRAIN
		ST.	STREET
		T.C.	TOP OF CURB
		T.D.	TOP OF DECK
		TEL.	TELEPHONE
		T.G.	TOP OF GRATE
		T.H.W.	TOP OF HEADWALL
		T.F.	TOP OF FOOTING
		T.O.S.	TOP OF SUBGRADE
		T.W.	TOP OF WALL
		S	SANITARY SEWER
		W	WATER
		W.I.F.	WROUGHT IRON FENCE
		W.M.	WATER METER
		W.V.	WATER VALVE

SOILS ENGINEER STATEMENT

THESE GRADING PLANS WERE REVIEWED AND APPROVED, AND THAT THEY COMPLY WITH ALL THE REQUIREMENTS AND RECOMMENDATIONS OF THE GEOTECHNICAL/SOILS REPORT (GEOTECHNICAL INVESTIGATION PROPOSED COMMUNITY AQUATIC AND SENIOR CENTER BY SOUTHERN CALIFORNIA GEOTECHNICAL, INC. DATED NOVEMBER 18, 2021 AND RESULTS OF INFILTRATION TESTING BY SOUTHERN CALIFORNIA GEOTECHNICAL DATED NOVEMBER 19, 2021) AND GEOTECHNICAL/SOILS ENGINEER.

NAME — 10/5/2023 DATE

REGISTERED PROFESSIONAL ENGINEER — GREGORY K. MITCHELL — No. 2364 — GEOTECHNICAL — STATE OF CALIFORNIA

SOILS ENGINEER

SOUTHERN CALIFORNIA GEOTECHNICAL
22885 SAVI RANCH PARKWAY, SUITE E
YORBA LINDA, CA 92887
CONTACT: GREGORY MITCHELL, GE 2364
PH: 714-685-1115

BASIS OF BEARINGS

BEARINGS SHOWN HEREON ARE BASED ON THE CENTERLINE OF 162 ND STREET (FORMERLY MARKET STREET) BEING N 89° 55' 30" E SHOWN ON TRACT NO. 10901, M.B. 254/31-32, OFFICIAL RECORDS.

BENCHMARK

THE CITY OF GARDENA BENCHMARK NO. 5D-15
ELEV. = 43.508'

LEGAL DESCRIPTION

A PORTION OF LOT 21 OF TRACT NO. 10901, IN THE CITY OF GARDENA, COUNTY OF LOS ANGELES, STATE OF CALIFORNIA, AS PER MAP RECORDED IN BOOK 254 PAGES 31 AND 32 OF MAPS, IN THE OFFICE OF THE COUNTY RECORDER OF SAID COUNTY.

AND

LOT S 11 AND 12 OF TRACT NO. 10901, IN THE CITY OF GARDENA, COUNTY OF LOS ANGELES, STATE OF CALIFORNIA, AS PER MAP RECORDED IN BOOK 254, PAGES 31 AND 32 OF MAPS, IN THE OFFICE OF THE COUNTY RECORDER OF SAID COUNTY.

SURVEYOR:

TED KRULL, PLS 5848
STARLIGHT SURVEYING, INC.
17955 SKY PARK CIR. STE F
IRVINE, CA. 92614
(949) 757-0613
DATES OF SURVEY: NOV. 2021 AND JAN. 2022

SHEET INDEX

SHEET	NUMBER
NOTE SHEET	C-0.01
DETAIL SHEET	C-0.02 TO C-0.04
DEMOLITION PLAN	D-1.01
PRECISE GRADING PLAN	C-1.01
WATER/SEWER PLAN	C-2.01
EROSION CONTROL PLAN	C-3.01
HORIZONTAL CONTROL/STRIPING PLAN	C-4.01

EARTHWORK **

AREA DISTURBED:	0.95±	ACRES
CUT	850	CUBIC YARDS
SHRINKAGE (9%±)	(75)	CUBIC YARDS
INFILTRATION AREA	135	CUBIC YARDS
FILL	1,200	CUBIC YARDS
SHRINKAGE (O/E) (9%±)	225	CUBIC YARDS
SUBSIDENCE (0.1') (FROM NEWLY DISTURBED AREAS)	0	CUBIC YARDS
IMPORT ***	515	CUBIC YARDS
OVER-EXCAVATION *	2,500	CUBIC YARDS

THE ABOVE CUT/FILL QUANTITIES ARE FOR PERMIT PURPOSES ONLY. THIS CALCULATION DOES NOT INCLUDE SOILS FROM BUILDING OR WALL FOOTINGS, NOR ANY UTILITY TRENCHING. THIS CALCULATION ASSUMES SHRINKAGE OF AN AVG. OF 9% AND 0.1' SUBSIDENCE OVER NEWLY EXCAVATED AREAS NOT DONE DURING ROUGH GRADING (TO BE CONFIRMED BY THE SOILS ENGINEER). REMOVALS PER TH

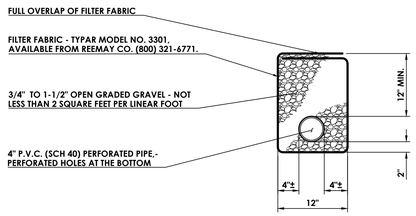

11 SUBDRAIN

SCALE: N.T.S.

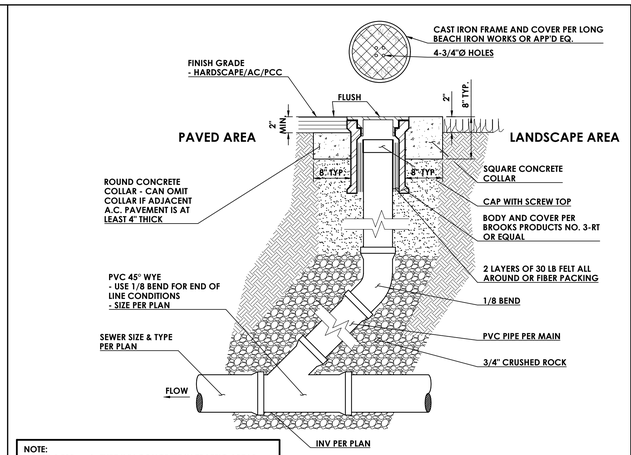

NOTE:
- USE 4,500 p.s.i., TYPE II/V CONCRETE IN TRAFFIC AREAS
- USE 3,250 p.s.i., TYPE II/V CONCRETE IN LANDSCAPE AREAS
- BACKFILL WITH SAME MATERIAL AS PIPE BACKFILL
- CLEANOUT PIPE TO BE SAME SIZE AND MATERIAL AS MAIN

8 SEWER CLEANOUT

SCALE: N.T.S.

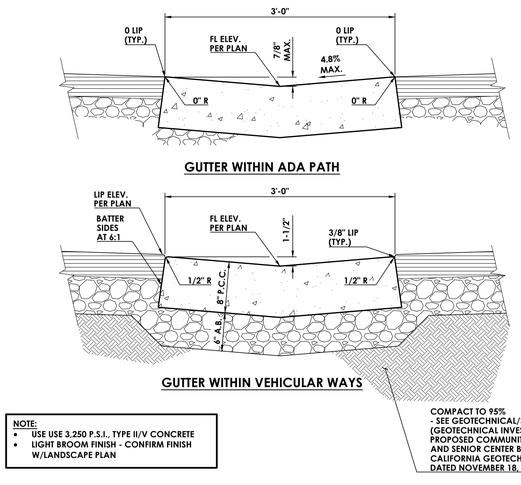

LEGEND

1. 4" DECK DRAIN, JOSAM DRAIN MODEL NO. 3004-5S-VP-2, OR APP'D EQUAL. VANDAL PROOF SCREWS, SATIN BRONZE FINISH
2. FINISH SURFACE PER GRADING PLANS
3. DRAINLINE CONNECTION TO STORM DRAIN LINE PER STORM DRAIN PLANS
4. CONCRETE SURFACE PER LANDSCAPE ARCHITECT'S PLAN

NOTE:
- GRATES LOCATED IN ACCESSIBLE AREAS ARE TO HAVE ADA COMPLIANT OPENINGS.
- INSTALL DRAIN IN P.C.C. SIDEWALK PER MANUFACTURERS. RECOMMENDATIONS.
- DECK DRAINS ARE TO BE PLACED AT EXPANSION JOINT OR CONTROL JOINT INTERSECTIONS UNLESS OTHERWISE SHOWN.

5 DECK DRAIN

SCALE: N.T.S.

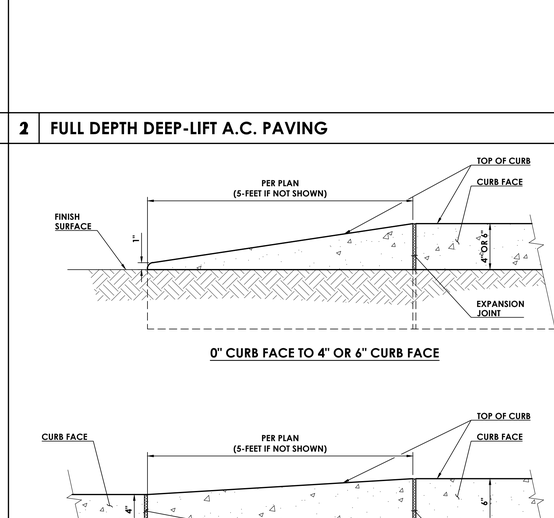

GUTTER WITHIN ADA PATH

GUTTER WITHIN VEHICULAR WAYS

NOTE:
- USE USE 3,250 P.S.I., TYPE II/V CONCRETE
- LIGHT BROOM FINISH - CONFIRM FINISH W/LANDSCAPE PLAN

3 3' V-GUTTER

SCALE: N.T.S.

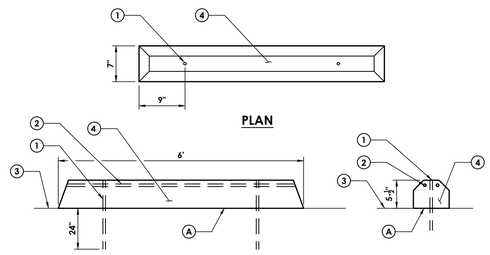

10 WHEEL STOP

SCALE: N.T.S.

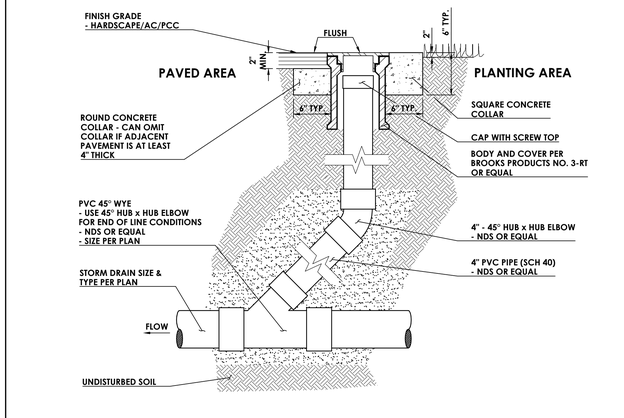

NOTE:
- USE 4,500 p.s.i., TYPE II/V CONCRETE IN TRAFFIC AREAS
- USE 3,250 p.s.i., TYPE II/V CONCRETE IN LANDSCAPE AREAS
- BACKFILL TO TOP OF 45° BEND WITH SAME MATERIAL AS PIPE BACKFILL

7 STORM DRAIN CLEANOUT

SCALE: N.T.S.

2 FULL DEPTH DEEP-LIFT A.C. PAVING

SCALE: N.T.S.

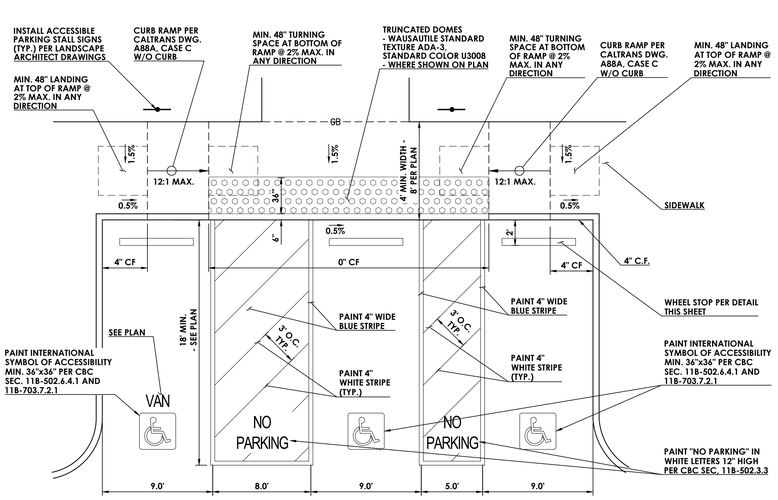

9 ACCESSIBLE (REGULAR AND VAN) PARKING STALL

SCALE: N.T.S.

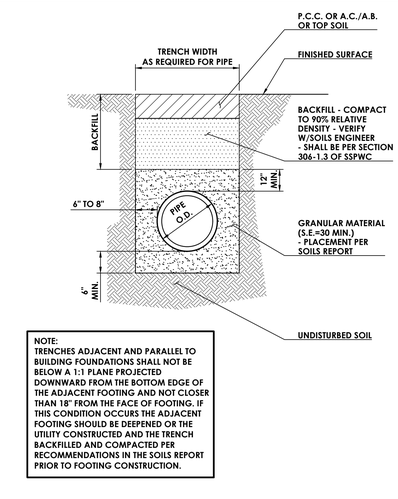

NOTE:
TRENCHES ADJACENT AND PARALLEL TO BUILDING FOUNDATIONS SHALL NOT BE BELOW A 1:1 PLANE PROJECTED DOWNWARD FROM THE BOTTOM EDGE OF THE ADJACENT FOOTING AND NOT CLOSER THAN 18" FROM THE FACE OF FOOTING. IF THIS CONDITION OCCURS THE ADJACENT FOOTING SHOULD BE DEEPENED OR THE UTILITY CONSTRUCTED AND THE TRENCH BACKFILLED AND COMPACTED PER RECOMMENDATIONS IN THE SOILS REPORT PRIOR TO FOOTING CONSTRUCTION.

6 UTILITY BEDDING

SCALE: N.T.S.

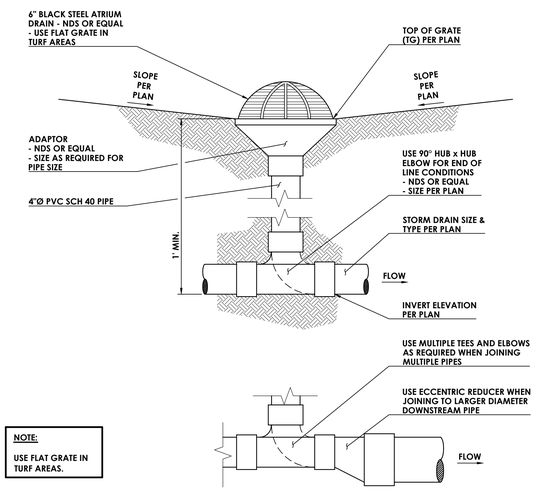

NOTE:
USE FLAT GRATE IN TURF AREAS.

4 ATRIUM DRAIN

SCALE: N.T.S.

1 C.F. TRANSITION

SCALE: N.T.S.

DIGALERT
DIAL TOLL FREE 1-800-422-4133
AT LEAST TWO DAYS BEFORE YOU DIG
UNDERGROUND SERVICE ALERT OF SOUTHERN CALIFORNIA

BASIS OF BEARINGS:

BEARINGS SHOWN HEREON ARE BASED ON THE CENTERLINE OF 162 ND STREET (FORMERLY MARKET STREET) BEING N 89° 55' 30" E SHOWN ON TRACT NO. 10901, M.B. 254/31-32

BENCHMARK:

THE CITY OF GARDENA BENCHMARK NO. 5D-15 ELEV. = 43.508

CONSULTANT:
CIVTEC
999 CORPORATE DR.
SUITE 100
LADERA RANCH, CA 92694
p: 949.463.8822
e: tec@civtec.net

THOMAS E. CARPENTER
C-81640
Exp. 09-30-23
CIVIL
STATE OF CALIFORNIA
9/26/2023

PREPARED UNDER THE SUPERVISION OF:
RJM DESIGN GROUP
31591 Camino Capistrano
San Juan Capistrano, CA 92675
www.RJMdesigngroup.com
(949) 493-2690 fax
(949) 493-2600 phone

REGISTERED LANDSCAPE ARCHITECT - ROBERT J. MADDOW - No. 3584 - STATE OF CALIFORNIA - 09/30/2023 Date

REVISIONS

NO.	DESCRIPTION	DATE	APPROVED
1	90% CD SUBMITTAL	12/15/2022	
2	100% CD SUBMITTAL	05/01/2023	
3	FINAL SUBMITTAL	10/02/2023	

B.M.: THE CITY OF GARDENA BENCHMARK NO. 5D-15 ELEV. = 43.508'

	INITIAL	DATE
DESIGNED BY	TEC	
DRAWN BY	STAFF	
CHECKED BY	TEC	

CITY OF GARDENA
DEPARTMENT OF PUBLIC WORKS - ENGINEERING

DETAIL SHEET
COMMUNITY AQUATICS & SENIOR CENTER
C-0.02

APPROVED BY:

DATE DIRECTOR OF PUBLIC WORKS

SHT. 6 OF 195 DWG. NO. 5-2606

PLOT DATE: 9/26/2023

NOTE TO CONTRACTOR:

THIS BMP WAS DESIGNED IN CONJUNCTION WITH TESTED ONSITE SOIL INFILTRATION RATES THAT CAN BE SIGNIFICANTLY REDUCED IF THE SOILS ARE EXPOSED TO EXCESSIVE DISTURBANCE OR COMPACTION DURING CONSTRUCTION. THEREFORE, THE SUBGRADE SOILS WITHIN PROPOSED INFILTRATION SYSTEM AREAS SHOULD NOT BE OVEREXCAVATED, UNDERCUT OR COMPACTED IN ANY SIGNIFICANT MANNER.

OR APPROVED EQUAL

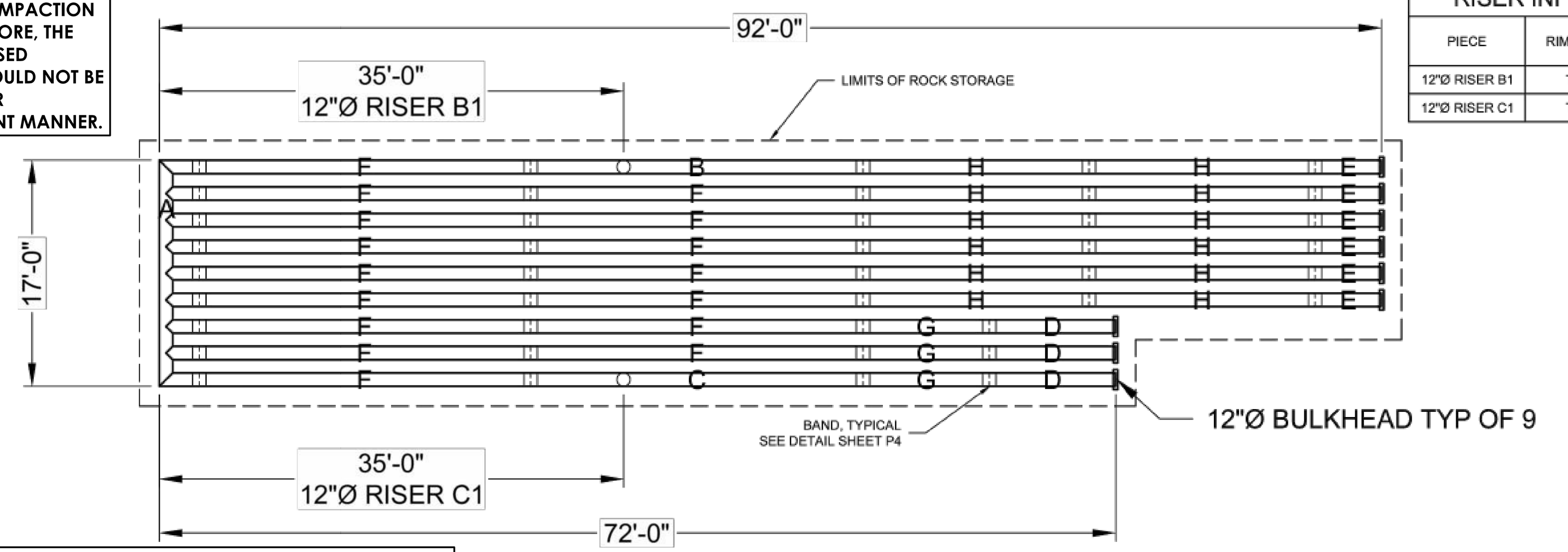

RISER INFORMATION		
PIECE	RIM ELEV.	SYSTEM INVERT
12"Ø RISER B1	TBD	TBD
12"Ø RISER C1	TBD	TBD

SYSTEM DESCRIPTION:

FROM LID PLAN:
- REQUIRED STORM WATER QUALITY DESIGN VOLUME ($SWQD_V$) = 1,870 cf
- REQUIRED $SWQD_V$ FLOW RATE = 0.31 cfs

ALL REQUIRED TREATMENT FLOW WILL PASS THOUGH CDS UNIT AND INTO UNDERGROUND INFILTRATION SYSTEM. RUNOFF IN EXCESS OF REQUIRED FLOW AND VOLUME WILL BYPASS SYSTEM TO CURB DRAIN IN HARVARD AVE.

THE UNDERSIGNED HEREBY APPROVES THE ATTACHED (5) PAGES INCLUDING THE FOLLOWING:
- **PIPE STORAGE = 610 CF**
- **MAINLINE PIPE GAGE = 16**
- **WALL TYPE = PERFORATED**
- **DIAMETER = 12"**
- **FINISH = ALT2**
- **CORRUGATION = 2 2/3x1/2**

CUSTOMER DATE

ASSEMBLY

SCALE: 1" = 20'
STRUCTURAL BACKFILL STORAGE: 1,196 CF
TOTAL STORAGE PROVIDED: 1,806 CF
LOADING: H20
PIPE INV. = 39.3'±

NOTES

- THE PIPE SHOULD BE FULLY PERFORATED IN ACCORDANCE WITH AASHTO M 36, SECTION 8.3.2.2, AND USING CLASS 2 PERFORATIONS. THE TOTAL OPEN AREA OF THE PERFORATIONS WILL BE A MINIMUM OF 2.3% OF THE PIPE SURFACE AREA.
- BULKHEADS SHALL BE 12-GAGE OR HEAVIER STEEL AND THE COATING WILL MATCH THE SPECIFIED CMP COATING. BULKHEAD PLATES SHALL BE FULLY WELDED ONTO THE CMP WITH STEEL REINFORCEMENT AS REQUIRED. THE STEEL REINFORCEMENT SHALL BE POST COATED WITH ZINC RICH PAINT PER AASHTO M 36. BULKHEAD DESIGNS SHALL SATISFY THE REQUIREMENTS SHOWN IN CHAPTER 8 OF THE NCSPA CSP DESIGN MANUAL AND CALCULATIONS SHALL BE PROVIDED TO THE ENGINEER OF RECORD (EOR) FOR APPROVAL UPON REQUEST.
- ALL FITTINGS SHALL BE STRUCTURALLY CHECKED FOR REINFORCEMENTS PER ASTM A998 AND PROVIDED TO THE EOR FOR APPROVAL UPON REQUEST.
- CONNECTING BANDS FOR INFILTRATION SYSTEMS SHALL BE ANY TYPE, BUT MUST BE AT LEAST 12" WIDE. BANDS SHALL MATCH THE SPECIFIED CMP COATING AND MEET THE REQUIREMENTS OF AASHTO M 36.
- ALL METALLIC COATINGS AFFECTED BY MANUFACTURING FABRICATION SHALL BE REPAIRED PER AASHTO M 36 SECTION 11 REQUIREMENTS (E.G. ZINC-RICH PAINT ON ALL WELDS). IF POLYMER COATINGS ARE USED THE REPAIR OF DAMAGED COATINGS WILL BE IN CONFORMANCE WITH AASHTO M 245 SECTION 11 REQUIREMENTS.
- ACCESS LADDERS SHALL BE ATTACHED BY THE MANUFACTURER PRIOR TO DELIVERY, NOT INSTALLED ON THE JOBSITE.

The design and information shown on this drawing is provided as a service to the project owner, engineer and contractor by Contech Engineered Solutions LLC ("Contech"). Neither this drawing, nor any part thereof, may be used, reproduced or modified in any manner without the prior written consent of Contech. Failure to comply is done at the user's own risk and Contech expressly disclaims any liability or responsibility for such use.

If discrepancies between the supplied information upon which the drawing is based and actual field conditions are encountered as site work progresses, these discrepancies must be reported to Contech immediately for re-evaluation of the design. Contech accepts no liability for designs based on missing, incomplete or inaccurate information supplied by others.

MARK	DATE	REVISION DESCRIPTION	BY

CONTECH ENGINEERED SOLUTIONS LLC
www.ContechES.com
9100 Centre Pointe Dr., Suite 400, West Chester, OH 45069
800-338-1122 513-645-7000 513-645-7993 FAX

CONTECH CMP DETENTION SYSTEMS
CONTECH PROPOSAL DRAWING

12"Ø PERFORATED UNDERGROUND RETENTION SYSTEM - 725765-010
GARDENA AQUATICS AND SENIOR CENTER
GARDENA, CA
SITE DESIGNATION:

PROJECT No.: 725765 SEQ. No.: 010 DATE: 08/22/2023
DESIGNED: RLH DRAWN: RLH
CHECKED: APPROVED:
SHEET NO.: P1 OF 5

---

2 2/3" x 1/2" CORRUGATION - STEEL AND ALUMINUM CMP
EDGE SPACING EQUAL ON BOTH SIDES

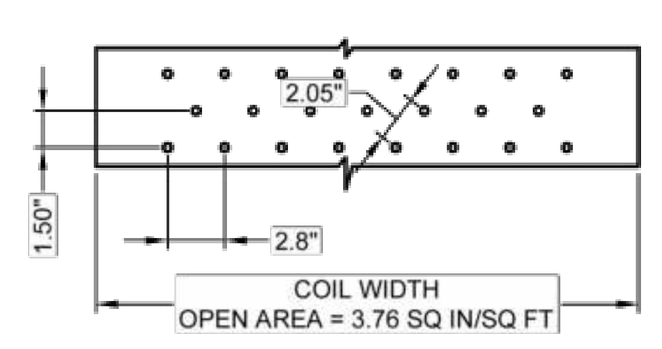

NOTES:
1. PERFORATIONS MEET AASHTO AND ASTM SPECIFICATIONS.
2. PERFORATION OPEN AREA PER SQUARE FOOT OF PIPE IS BASED ON THE NOMINAL DIAMETER AND LENGTH OF PIPE.
3. DIMENSIONS SUBJECT TO MANUFACTURER'S TOLERANCES.
4. ALL HOLES 3/8"Ø.

EXFILTRATION AREA
STANDARD PERFORATION PATTERNS

APPROXIMATE AREA PER LINEAR FOOT OF PIPE				
PIPE	CORRUGATION PATTERN			
	2 2/3" x 1/2"	3" x 1"	5" x 1"	ULTRA FLO
12"Ø	12.2 SQ. IN.			

NOTES:
- GAGE AND COATING LIMITATIONS APPLY. 5" x 1" IS NOT AVAILABLE IN ALUMINUM.
- DIMENSIONS SUBJECT TO MANUFACTURER'S TOLERANCES.

TYPICAL PERFORATION DETAIL
NOT TO SCALE

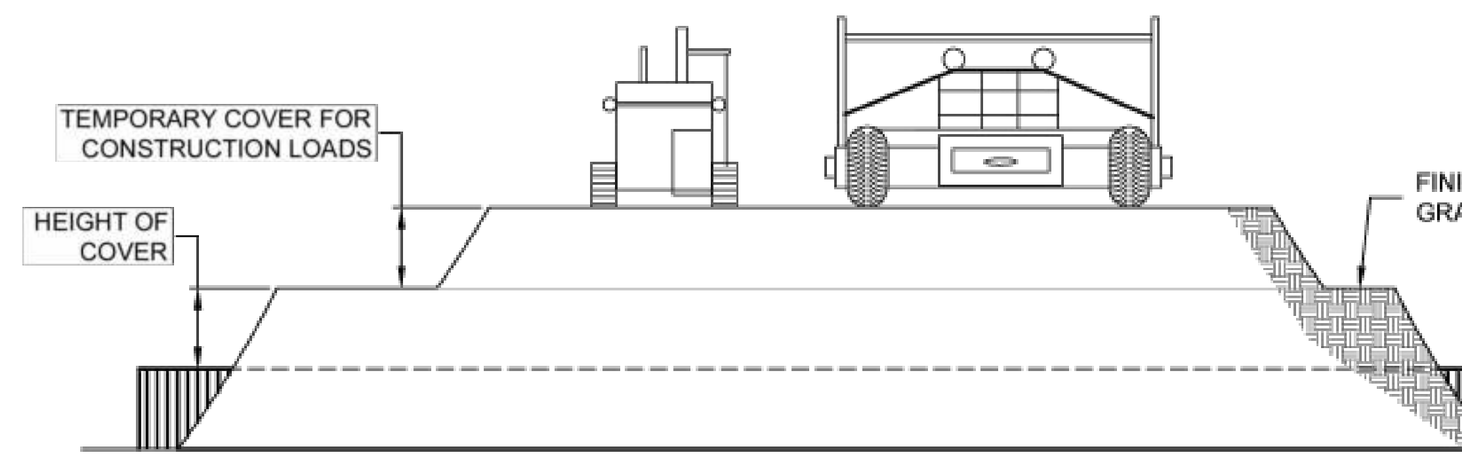

CONSTRUCTION LOADS

FOR TEMPORARY CONSTRUCTION VEHICLE LOADS, AN EXTRA AMOUNT OF COMPACTED COVER MAY BE REQUIRED OVER THE TOP OF THE PIPE. THE HEIGHT-OF-COVER SHALL MEET THE MINIMUM REQUIREMENTS SHOWN IN THE TABLE BELOW. THE USE OF HEAVY CONSTRUCTION EQUIPMENT NECESSITATES GREATER PROTECTION FOR THE PIPE THAN FINISHED GRADE COVER MINIMUMS FOR NORMAL HIGHWAY TRAFFIC.

PIPE SPAN, INCHES	AXLE LOADS (kips)			
	18-50	50-75	75-110	110-150
	MINIMUM COVER (FT)			
12-42	2.0	2.5	3.0	3.0
48-72	3.0	3.0	3.5	4.0
78-120	3.0	3.5	4.0	4.0
126-144	3.5	4.0	4.5	4.5

*MINIMUM COVER MAY VARY, DEPENDING ON LOCAL CONDITIONS. THE CONTRACTOR MUST PROVIDE THE ADDITIONAL COVER REQUIRED TO AVOID DAMAGE TO THE PIPE. MINIMUM COVER IS MEASURED FROM THE TOP OF THE PIPE TO THE TOP OF THE MAINTAINED CONSTRUCTION ROADWAY SURFACE.

CONSTRUCTION LOADING DIAGRAM
NOT TO SCALE

SPECIFICATION FOR CORRUGATED STEEL PIPE-ALUMINIZED TYPE 2 STEEL

SCOPE

THIS SPECIFICATION COVERS THE MANUFACTURE AND INSTALLATION OF THE CORRUGATED STEEL PIPE (CSP) DETAILED IN THE PROJECT PLANS.

MATERIAL

THE ALUMINIZED TYPE 2 STEEL COILS SHALL CONFORM TO THE APPLICABLE REQUIREMENTS OF AASHTO M274 OR ASTM A929.

PIPE

THE CSP SHALL BE MANUFACTURED IN ACCORDANCE WITH THE APPLICABLE REQUIREMENTS OF AASHTO M36 OR ASTM A760. THE PIPE SIZES, GAGES AND CORRUGATIONS SHALL BE AS SHOWN ON THE PROJECT PLANS.

ALL FABRICATION OF THE PRODUCT SHALL OCCUR WITHIN THE UNITED STATES.

HANDLING AND ASSEMBLY

SHALL BE IN ACCORDANCE WITH RECOMMENDATIONS OF THE NATIONAL CORRUGATED STEEL PIPE ASSOCIATION (NCSPA)

INSTALLATION

SHALL BE IN ACCORDANCE WITH AASHTO STANDARD SPECIFICATIONS FOR HIGHWAY BRIDGES, SECTION 26, DIVISION II OR ASTM A798 AND IN CONFORMANCE WITH THE PROJECT PLANS AND SPECIFICATIONS. IF THERE ARE ANY INCONSISTENCIES OR CONFLICTS THE CONTRACTOR SHOULD DISCUSS AND RESOLVE WITH THE SITE ENGINEER.

IT IS ALWAYS THE RESPONSIBILITY OF THE CONTRACTOR TO FOLLOW OSHA GUIDELINES FOR SAFE PRACTICES.

ANTI-FLOTATION PROVISIONS DUE TO HIGH GROUNDWATER OR OTHER FLOTATION CONCERNS ARE SITE-SPECIFIC DESIGN CONSIDERATIONS AND SHALL BE SPECIFIED BY ENGINEER OF RECORD.

MATERIAL SPECIFICATION
NOT TO SCALE

12"Ø PERFORATED UNDERGROUND RETENTION SYSTEM - 725765-010
GARDENA AQUATICS AND SENIOR CENTER
GARDENA, CA
SITE DESIGNATION:

PROJECT No.: 725765 SEQ. No.: 010 DATE: 08/22/2023
DESIGNED: RLH DRAWN: RLH
CHECKED: APPROVED:
SHEET NO.: P2 OF 5

TABLE 1:

DIAMETER, D	MIN. COVER	CORR. PROFILE
6"-10"	12"	1 1/2" x 1/4"
12"-48"	12"	2 2/3" x 1/2"
>48"-96"	12"	3" x 1", 5" x 1"
>96"	D/8	3" x 1", 5" x 1"

- STRUCTURAL BACKFILL MUST EXTEND TO LIMITS OF THE TABLE
- TOTAL HEIGHT OF COMPACTED COVER FOR CONVENTIONAL HIGHWAY LOADS IS MEASURED FROM TOP OF PIPE TO BOTTOM OF FLEXIBLE PAVEMENT OR TOP OF RIGID PAVEMENT.

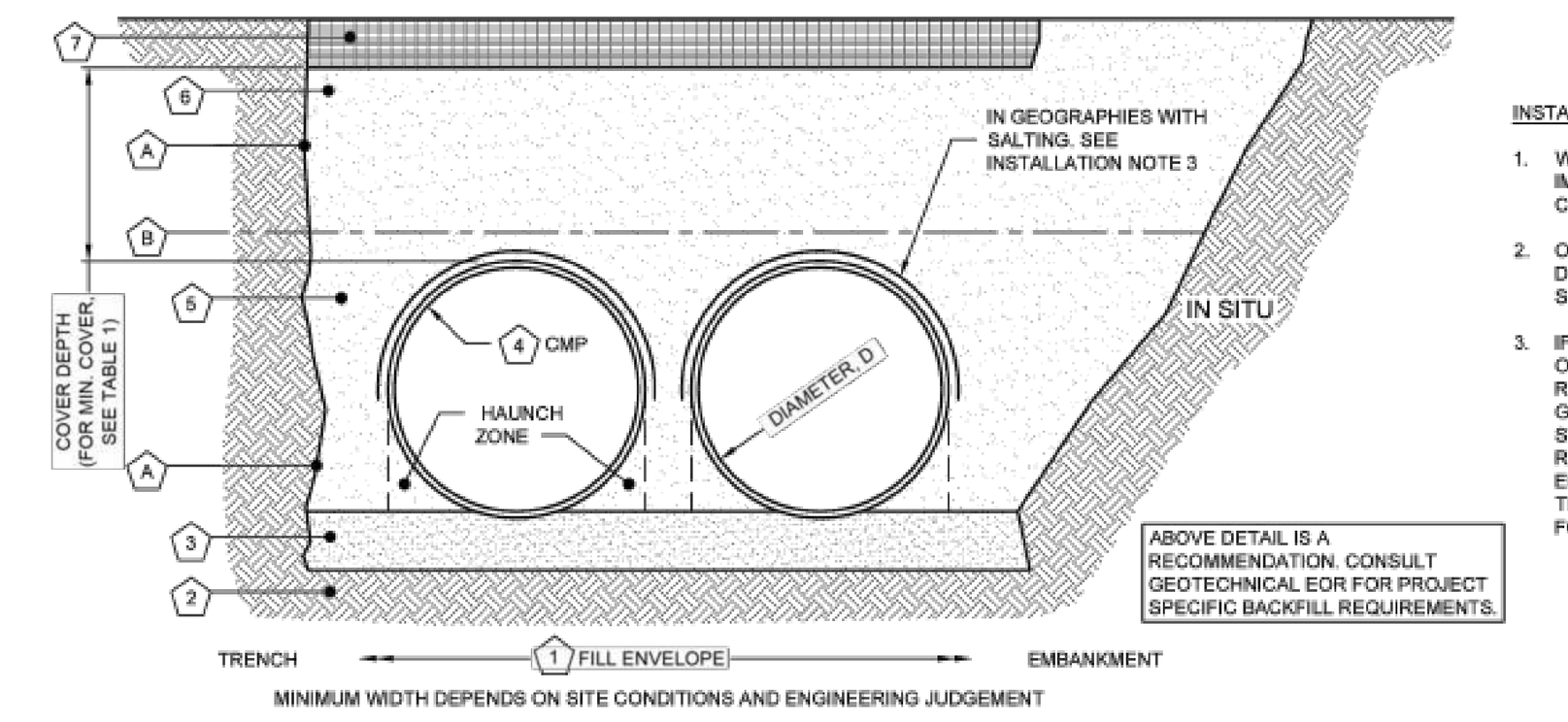

INSTALLATION NOTES

1. WHEN PLACING THE FIRST LIFTS OF BACKFILL IT IS IMPORTANT TO MAKE SURE THAT THE BACKFILL IS PROPERLY COMPACTED UNDER AND AROUND THE PIPE HAUNCHES.
2. OTHER ALTERNATE BACKFILL MATERIAL MAY BE ALLOWED DEPENDING ON SITE SPECIFIC CONDITIONS, AS APPROVED BY SITE ENGINEER.
3. IF SALTING AGENTS FOR SNOW AND ICE REMOVAL ARE USED ON OR NEAR THE PROJECT, A GEOMEMBRANE BARRIER IS RECOMMENDED OVER THE UPPER HALF OF THE PIPE. THE GEOMEMBRANE LINER IS INTENDED TO HELP PROTECT THE SYSTEM FROM THE POTENTIAL ADVERSE EFFECTS THAT MAY RESULT FROM A CHANGE IN THE SURROUNDING ENVIRONMENT OVER A PERIOD OF TIME. PLEASE REFER TO THE CORRUGATED METAL PIPE DETENTION DESIGN GUIDE FOR ADDITIONAL INFORMATION.

TABLE 2:

	CMP RETENTION STANDARD BACKFILL SPECIFICATIONS			
	MATERIAL LOCATION	MATERIAL SPECIFICATION	DESCRIPTION	
1	FILL ENVELOPE WIDTH	PER ENGINEER OF RECORD	MINIMUM TRENCH WIDTH MUST ALLOW ROOM FOR PROPER COMPACTION OF HAUNCH MATERIALS UNDER THE PIPE. THE SUGGESTED MINIMUM TRENCH WIDTH, OR EOR RECOMMENDATION: PIPE ≤ 12": D + 16" PIPE > 12": 1.5D + 12"	MINIMUM EMBANKMENT WIDTH (IN FEET) FOR INITIAL FILL ENVELOPE: PIPE < 24": 3.0D PIPE 24" - 144": D + 4'0" PIPE > 144": D + 10'0"
2	FOUNDATION	**AASHTO 26.5.2** - PER ENGINEER OF RECORD	PRIOR TO PLACING THE BEDDING, THE FOUNDATION MUST BE CONSTRUCTED TO A UNIFORM AND STABLE GRADE. IN THE EVENT THAT UNSUITABLE FOUNDATION MATERIALS ARE ENCOUNTERED DURING EXCAVATION, THEY SHALL BE REMOVED AND FOUNDATION BROUGHT BACK TO GRADE WITH A FILL MATERIAL APPROVED BY THE ENGINEER OF RECORD.	
3	BEDDING	**AASHTO M 43: 3, 357, 4, 467, 5, 56, 57**	ENGINEER OF RECORD TO DETERMINE IF BEDDING IS REQUIRED. PIPE MAY BE PLACED ON THE TRENCH BOTTOM OF A RELATIVELY LOOSE, NATIVE SUITABLE WELL GRADED GRANULAR MATERIAL THAT IS ROUGHLY SHAPED TO FIT THE BOTTOM OF THE PIPE, 2" MIN DEPTH. THE BEDDING MATERIAL MAY BE SUITABLE OPEN GRADED GRANULAR BEDDING CONFORMING TO AASHTO SOIL CLASSIFICATIONS A1, A2, OR A3 WITH MAXIMUM PARTICLE SIZE OF 3" PER AASHTO 26.3.8.1	
4	CORRUGATED METAL PIPE			
5	BACKFILL	FREE-DRAINING, ANGULAR, WASHED-STONE PER **AASHTO M 43: 3, 357, 4, 467, 5, 56, 57** OR APPROVED EQUAL *	HAUNCH ZONE MATERIAL SHALL BE HAND SHOVELED OR SHOVEL SLICED INTO PLACE TO ALLOW FOR PROPER COMPACTION WITHOUT SOFT SPOTS. BACKFILL SHALL BE PLACED IN 8" +/- LOOSE LIFTS AND COMPACTED TO 90% STANDARD PROCTOR PER AASHTO T 99. BACKFILL SHALL BE PLACED SUCH THAT THERE IS NO MORE THAN A TWO LIFT (16") DIFFERENTIAL BETWEEN ANY OF THE PIPES AT ANY TIME DURING THE BACKFILL PROCESS. THE BACKFILL SHOULD BE ADVANCED ALONG THE LENGTH OF THE SYSTEM TO AVOID DIFFERENTIAL LOADING. WHERE CONVENTIONAL COMPACTION TESTING IS NOT PRACTICAL, THE MATERIAL SHALL BE MECHANICALLY COMPACTED UNTIL NO FURTHER YIELDING OF MATERIAL IS OBSERVED UNDER THE COMPACTOR. **IN AREAS WITH HIGH WATER TABLE FLUCTUATIONS THAT INTERACT WITH THE PIPE ZONE, CONSIDER INSTALLING A GEOTEXTILE SEPARATION LAYER TO PREVENT SOIL MIGRATION.	
6	COVER MATERIAL	UP TO MIN. COVER - **AASHTO M 145: A-1, A-2, A-3** ABOVE MIN. COVER - PER ENGINEER OF RECORD	COVER MATERIAL MAY INCLUDE NON-BITUMINOUS, GRANULAR ROADBASE MATERIAL WITHIN MIN COVER LIMITS	
7	RIGID OR FLEXIBLE PAVEMENT (IF APPLICABLE)	PER ENGINEER OF RECORD	FLEXIBLE PAVEMENT SHOULD NOT BE COUNTED AS PART OF THE FILL HEIGHT OVER THE CMP. FINAL BACKFILL MATERIAL SELECTION AND COMPACTION REQUIREMENTS SHALL FOLLOW THE PROJECT PLANS AND SPECIFICATIONS PER THE ENGINEER OF RECORD.	
A	OPTIONAL SIDE GEOTEXTILE	NONE	GEOTEXTILE LAYER IS RECOMMENDED ON SIDES OF EXCAVATION TO PREVENT SOIL MIGRATION.	
B	GEOTEXTILE BETWEEN LAYERS	NONE	IF SOIL TYPES DIFFER AT ANY POINT ABOVE PIPE INVERT, A GEOTEXTILE LAYER IS RECOMMENDED TO BE PLACED BETWEEN THE LAYERS TO PREVENT SOIL MIGRATION.	

NOTES:
- FOR MULTIPLE BARREL INSTALLATIONS, THE RECOMMENDED STANDARD SPACING BETWEEN PARALLEL PIPE RUNS SHALL BE THE PIPE DIAMETER /2 BUT NO LESS THAN 12" FOR DIAMETERS <72". FOR 72" AND LARGER DIAMETERS, THE MINIMUM SPACING IS 36". CONTACT YOUR CONTECH REPRESENTATIVE FOR NONSTANDARD SPACING.
- * APPROVED REGIONAL EQUIVALENTS FOR SECTION 5 INCLUDE CA-7, MIDOT 6AA, 6A, OR 5G, PROVIDED THEY MEET THE PARTICLE SIZES INDICATED.

MANUFACTURER RECOMMENDED BACKFILL
NOT TO SCALE

12"Ø PERFORATED UNDERGROUND RETENTION SYSTEM - 725765-010
GARDENA AQUATICS AND SENIOR CENTER
GARDENA, CA
SITE DESIGNATION:

PROJECT No.: 725765 SEQ. No.: 010 DATE: 08/22/2023
DESIGNED: RLH DRAWN: RLH
CHECKED: APPROVED:
SHEET NO.: P3 OF 5

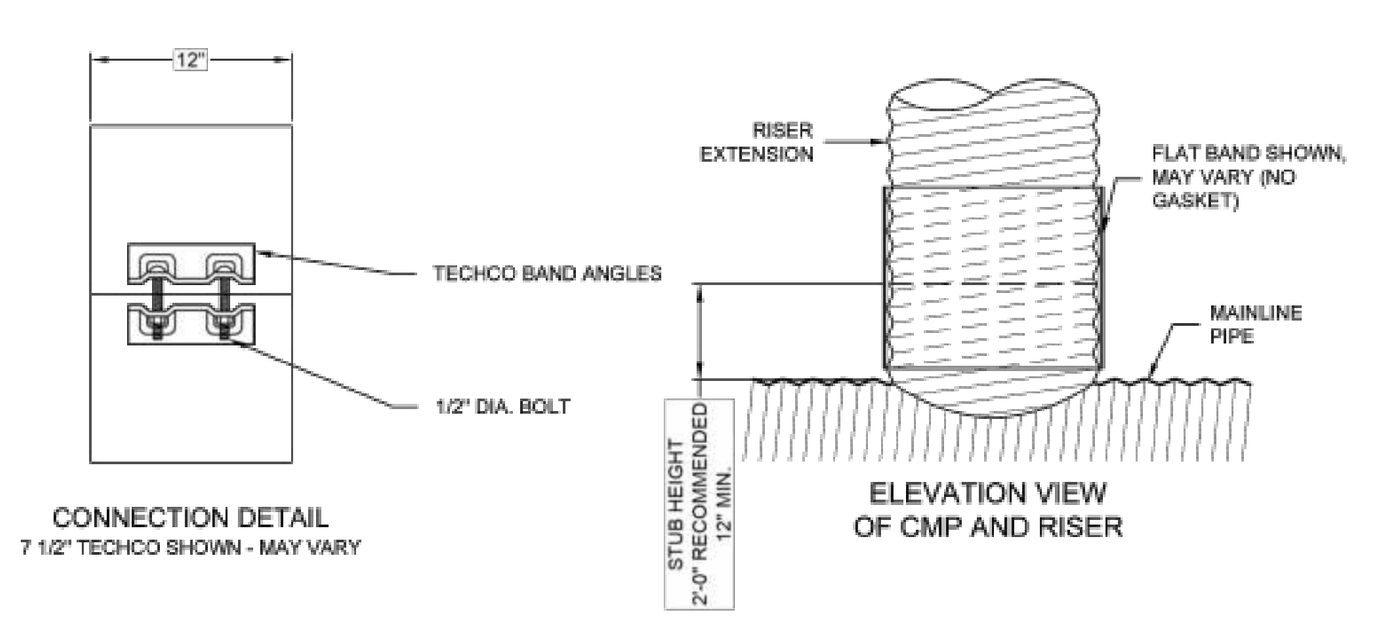

PLAIN END CMP RISER PIPE

GENERAL NOTES:
1. **DELIVERED BAND STYLE AND FASTENER TYPE MAY VARY BY FABRICATION PLANT.**
2. JOINT IS TO BE ASSEMBLED PER AASHTO BRIDGE CONSTRUCTION SPECIFICATION SEC 26.4.2.4.
3. BAND MATERIAL AND GAGE TO BE SAME AS RISER MATERIAL.
4. IF RISER HAS A HEIGHT OF COVER OF 10' OR MORE, USE A SLIP JOINT.
5. BANDS ARE NORMALLY FURNISHED AS FOLLOWS:
   - 12" THRU 48" 1-PIECE
   - 54" 2-PIECES
6. ALL RISER JOINT COMPONENTS WILL BE FIELD ASSEMBLED.
7. MANHOLE RISERS IN APPLICATIONS WHERE TRAFFIC LOADS ARE IMPOSED REQUIRE SPECIAL DESIGN CONSIDERATIONS.
8. DIMENSIONS SUBJECT TO MANUFACTURING TOLERANCES.

12" RISER BAND DETAIL
NOT TO SCALE

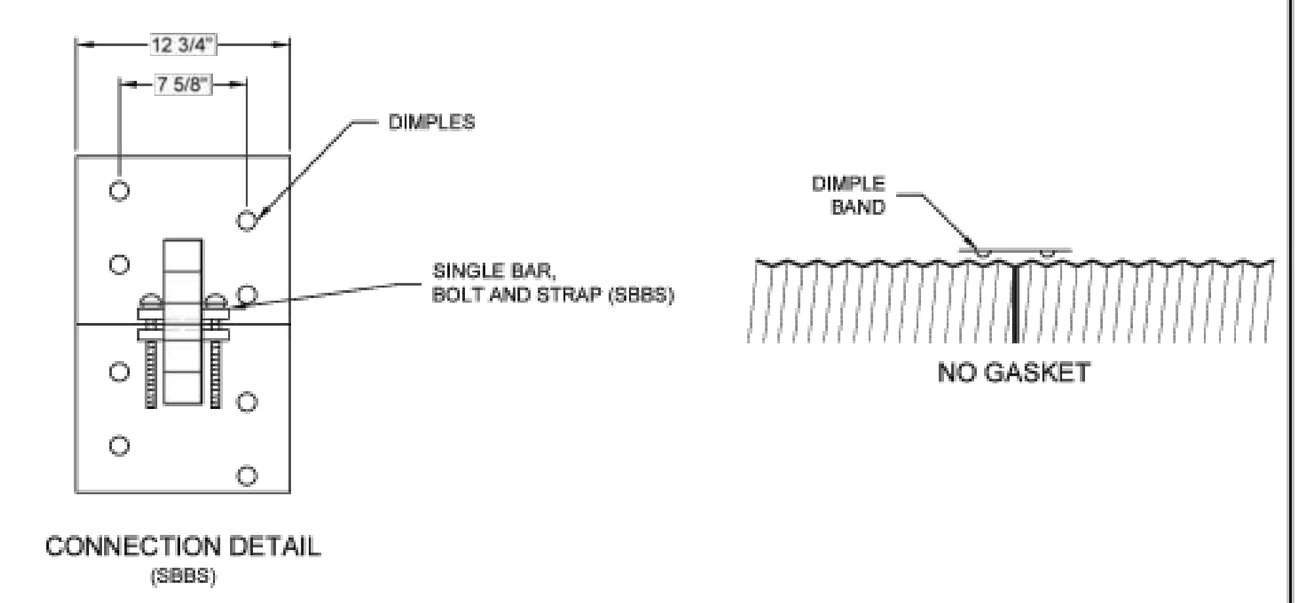

PLAIN END CMP PIPE

GENERAL NOTES:
1. JOINT IS TO BE ASSEMBLED PER AASHTO BRIDGE CONSTRUCTION SPECIFICATION SEC 26.4.2.4.
2. BAND MATERIALS AND/OR COATING CAN VARY BY LOCATION. CONTACT YOUR CONTECH REPRESENTATIVE FOR AVAILABILITY.
3. BANDS ARE SHAPED TO MATCH THE PIPE-ARCH WHEN APPLICABLE.
4. BANDS ARE NORMALLY FURNISHED AS FOLLOWS:
   - 12" THRU 48" 1-PIECE
   - 54" THRU 96" 2-PIECES
   - 102" THRU 144" 3-PIECES
5. BAND FASTENERS ARE ATTACHED WITH SPOT WELDS, RIVETS OR HAND WELDS.
6. DIMENSIONS ARE SUBJECT TO MANUFACTURING TOLERANCES.
7. ORDER SHALL DESIGNATE GASKET OPTION, IF REQUIRED (SEE DETAILS ABOVE).

D-12 DIMPLE BAND DETAIL
NOT TO SCALE

12"Ø PERFORATED UNDERGROUND RETENTION SYSTEM - 725765-010
GARDENA AQUATICS AND SENIOR CENTER
GARDENA, CA
SITE DESIGNATION:

PROJECT No.: 725765 SEQ. No.: 010 DATE: 08/22/2023
DESIGNED: RLH DRAWN: RLH
CHECKED: APPROVED:
SHEET NO.: P4 OF 5

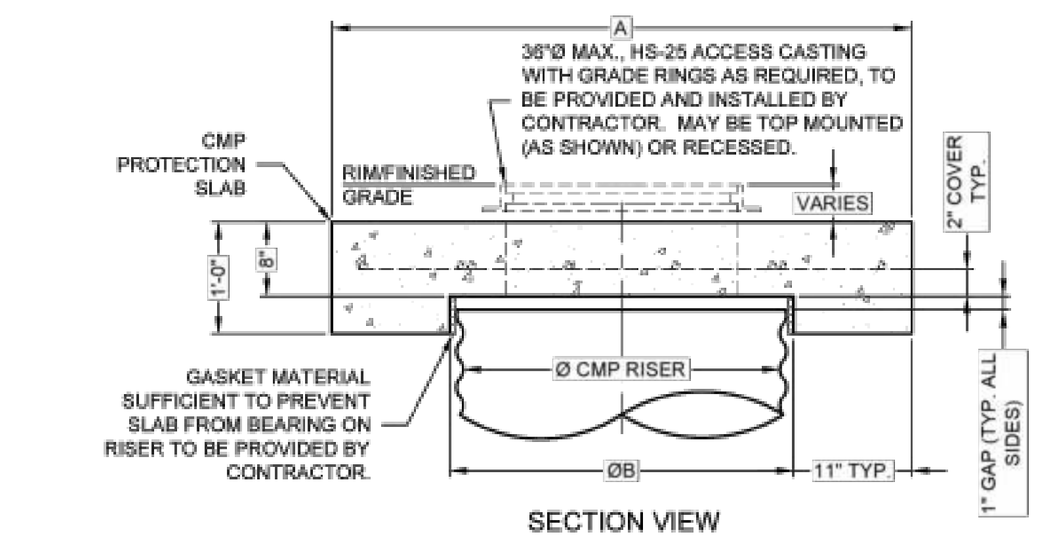

REINFORCING TABLE				
Ø CMP RISER	A	B Ø	REINFORCING	**BEARING PRESSURE (PSF)
24"	4'Ø 4'x4'	26"	#5 @ 10" OCEW #5 @ 10" OCEW	2,540 1,900
30"	4'-6"Ø 4'-6" x 4'-6"	32"	#5 @ 10" OCEW #5 @ 9" OCEW	2,260 1,670
36"	5'Ø 5' x 5'	38"	#5 @ 9" OCEW #5 @ 8" OCEW	2,060 1,500
42"	5'-6"Ø 5'-6" x 5'-6"	44"	#5 @ 8" OCEW #5 @ 8" OCEW	1,490 1,370
48"	6'Ø 6' x 6'	50"	#5 @ 7" OCEW #5 @ 7" OCEW	1,210 1,270

** ASSUMED SOIL BEARING CAPACITY

ACCESS CASTING NOT SUPPLIED BY CONTECH

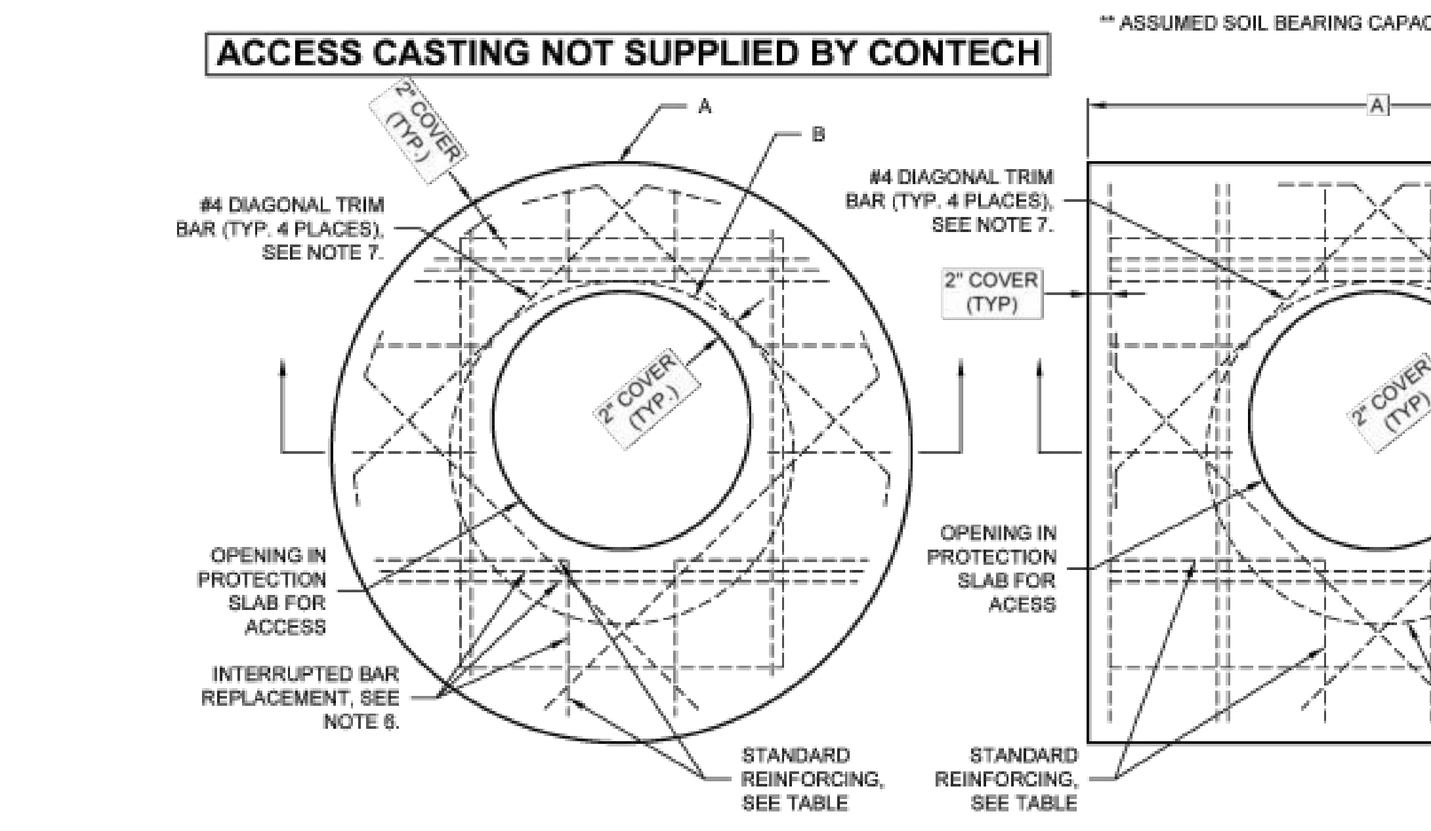

NOTES:
1. DESIGN IN ACCORDANCE WITH AASHTO, 17th EDITION AND ACI 350.
2. DESIGN LOAD HS25.
3. EARTH COVER = 1' MAX.
4. CONCRETE STRENGTH = 4,000 psi
5. REINFORCING STEEL = ASTM A615, GRADE 60.
6. PROVIDE ADDITIONAL REINFORCING AROUND OPENINGS EQUAL TO THE BARS INTERRUPTED, HALF EACH SIDE. ADDITIONAL BARS TO BE IN THE SAME PLANE.
7. TRIM OPENING WITH DIAGONAL #4 BARS, EXTEND BARS A MINIMUM OF 12" BEYOND OPENING, BEND BARS AS REQUIRED TO MAINTAIN BAR COVER.
8. PROTECTION SLAB AND ALL MATERIALS TO BE PROVIDED AND INSTALLED BY CONTRACTOR.
9. DETAIL DESIGN BY DELTA ENGINEERS, ARCHITECTS AND LAND SURVEYORS, ENDWELL, NY.

MANHOLE CAP DETAIL
NOT TO SCALE

12"Ø PERFORATED UNDERGROUND RETENTION SYSTEM - 725765-010
GARDENA AQUATICS AND SENIOR CENTER
GARDENA, CA
SITE DESIGNATION:

PROJECT No.: 725765 SEQ. No.: 010 DATE: 08/22/2023
DESIGNED: RLH DRAWN: RLH
CHECKED: APPROVED:
SHEET NO.: P5 OF 5

---

1 PERFORATED UNDERGROUND INFILTRATION SYSTEM

SCALE: N.T.S.

DIGALERT
DIAL TOLL FREE 1-800-422-4133
AT LEAST TWO DAYS BEFORE YOU DIG
UNDERGROUND SERVICE ALERT OF SOUTHERN CALIFORNIA

BASIS OF BEARINGS:

BEARINGS SHOWN HEREON ARE BASED ON THE CENTERLINE OF 162 ND STREET (FORMERLY MARKET STREET) BEING N 89° 55' 30" E SHOWN ON TRACT NO. 10901, M.B. 254/31-32

BENCHMARK:

THE CITY OF GARDENA BENCHMARK NO. 5D-15 ELEV. = 43.508

CONSULTANT:
civTEC
999 CORPORATE DR.
SUITE 100
LADERA RANCH, CA 92694
p: 949.463.8822
e: tec@civtec.net

REGISTERED PROFESSIONAL ENGINEER THOMAS E. CARCELLI C-81640 Exp. 09-30-23 CIVIL STATE OF CALIFORNIA
9/26/2023

PREPARED UNDER THE SUPERVISION OF:
RJM DESIGN GROUP
31591 Camino Capistrano
San Juan Capistrano, CA 92675
www.RJMdesigngroup.com
[949] 493-2690 *fax*
[949] 493-2600 *phone*

LICENSED LANDSCAPE ARCHITECT LARRY P. RYAN LICENSE NO. 2502 Signature 09/30/2025 Renewal Date 9/26/2023 Date STATE OF CALIFORNIA

REVISIONS			
NO.	DESCRIPTION	DATE	APPROVED
1	90% CD SUBMITTAL	12/15/2022	
2	100% CD SUBMITTAL	05/01/2023	
3	FINAL SUBMITTAL	10/02/2023	

B.M.: THE CITY OF GARDENA BENCHMARK NO. 5D-15 ELEV. = 43.508'

CITY OF GARDENA
DEPARTMENT OF PUBLIC WORKS - ENGINEERING

DETAIL SHEET
COMMUNITY AQUATICS & SENIOR CENTER
C-0.03

	INITAL	DATE
DESIGNED BY	TEC	
DRAWN BY	STAFF	
CHECKED BY	TEC	

APPROVED BY:
DATE DIRECTOR OF PUBLIC WORKS
SHT. 7 OF 195 DWG. NO. 5-2606

PLOT DATE: 9/26/2023

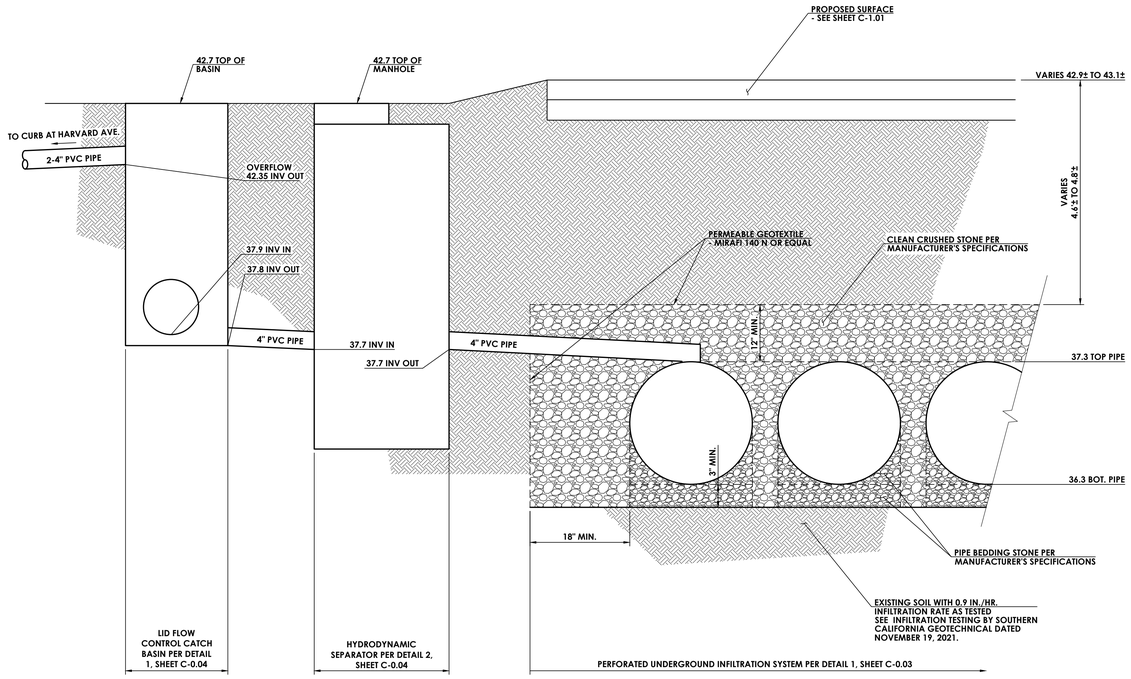

WATER QUALITY TREATMENT, INFILTRATION, AND BY-PASS DIAGRAM

SCALE: N.T.S.

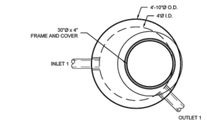

PLAN VIEW

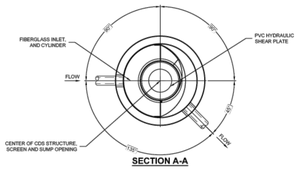

SECTION A-A

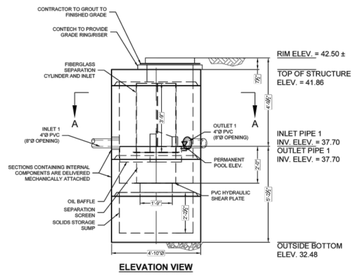

ELEVATION VIEW

MATERIAL LIST (PROVIDED BY CONTECH)

COUNT	DESCRIPTION	INSTALLED BY
1	FIBERGLASS INLET AND CYLINDER	CONTECH
1	4700 micron, 2' O.D. x 1.67' SEP. SCREEN	CONTECH
1	HARDWARE KIT	CONTECH
1	3/16 INCH PVC HYDRAULIC SHEAR PLATE *	CONTECH
1	SEALANT FOR JOINTS	CONTRACTOR
1 PLC	GRADE RINGS/RISERS	CONTRACTOR
1	30"Ø x 4" FRAME AND COVER, NON-VENTED EJ#00181011 9A01, OR EQUIV.	CONTRACTOR

* SEE HYDRAULIC SHEAR PLATE DETAIL

GENERAL NOTES
1. CONTECH TO PROVIDE ALL MATERIALS UNLESS NOTED OTHERWISE.
2. FOR FABRICATION DRAWINGS WITH DETAILED STRUCTURE DIMENSIONS AND WEIGHT, PLEASE CONTACT YOUR CONTECH ENGINEERED SOLUTIONS LLC REPRESENTATIVE. www.ContechES.com
3. CDS WATER QUALITY STRUCTURE SHALL BE IN ACCORDANCE WITH ALL DESIGN DATA AND INFORMATION CONTAINED IN THIS DRAWING. CONTRACTOR TO CONFIRM STRUCTURE MEETS REQUIREMENTS OF PROJECT.
4. STRUCTURE SHALL MEET AASHTO HS-20 LOAD RATING, ASSUMING EARTH COVER OF 0' - 2', AND GROUNDWATER ELEVATION AT, OR BELOW, THE OUTLET PIPE INVERT ELEVATION. ENGINEER OF RECORD TO CONFIRM ACTUAL GROUNDWATER ELEVATION. CASTINGS SHALL MEET AASHTO M306 AND BE CAST WITH THE CONTECH LOGO.
5. IF REQUIRED, PVC HYDRAULIC SHEAR PLATE IS PLACED ON SHELF AT BOTTOM OF SCREEN CYLINDER. REMOVE AND REPLACE AS NECESSARY DURING MAINTENANCE CLEANING.
6. CDS STRUCTURE SHALL BE PRECAST CONCRETE CONFORMING TO ASTM C-478 AND AASHTO LOAD FACTOR DESIGN METHOD.

INSTALLATION NOTES
A. ANY SUB-BASE, BACKFILL DEPTH, AND/OR ANTI-FLOTATION PROVISIONS ARE SITE-SPECIFIC DESIGN CONSIDERATIONS AND SHALL BE SPECIFIED BY ENGINEER OF RECORD.
B. CONTRACTOR TO PROVIDE EQUIPMENT WITH SUFFICIENT LIFTING AND REACH CAPACITY TO LIFT AND SET THE CDS MANHOLE STRUCTURE.
C. CONTRACTOR TO INSTALL JOINT SEALANT BETWEEN ALL STRUCTURE SECTIONS AND ASSEMBLE STRUCTURE.
D. CONTRACTOR TO PROVIDE, INSTALL AND GROUT INLET AND OUTLET PIPE(S). MATCH PIPE INVERTS WITH ELEVATIONS SHOWN. ALL PIPE CENTERLINES TO MATCH PIPE OPENING CENTERLINES.
E. CONTRACTOR TO TAKE APPROPRIATE MEASURES TO ASSURE UNIT IS WATER TIGHT, HOLDING WATER TO FLOWLINE INVERT MINIMUM. IT IS SUGGESTED THAT ALL JOINTS BELOW PIPE INVERTS ARE GROUTED.

STRUCTURE WEIGHT
APPROXIMATE HEAVIEST PICK = 6500 LBS.
STRUCTURE IS DELIVERED IN 3 PIECES

MAX FOOTPRINT = Ø4'-10"

CONTECH **PROPOSAL** DRAWING

OLSAZ
5944 / 570484
LAYOUT 1A
2015-4-FGIS

The design and information shown on this drawing is proprietary to CONTECH Engineered Solutions LLC. Any use or reproduction without written consent of CONTECH is prohibited. In the event that this drawing was supplied in electronic format, it is the responsibility of the recipient to verify the accuracy of the information when printed. Any scaling performed using electronic files is the responsibility of the recipient. In the event of any discrepancy between electronic files and the hard copy version, the hard copy version shall govern.

If any discrepancy is found, all associated information and design should be stopped and CONTECH should be notified immediately. Failure to do so and any subsequent actions taken by others based on these documents are the responsibility of others. CONTECH's liability is limited to the original contract amount for the supply of this drawing.

MARK	DATE	REVISION DESCRIPTION	BY

CDS2015-4-C - 725765-20
GARDENA AQUATICS AND SENIOR CENTER
GARDENA, CA
###

CONTECH ENGINEERED SOLUTIONS LLC
1411 Broadway Blvd. NE, Albuquerque, NM 87102
800.338.1122 | 505.842.1142 | www.ContechES.com

CDS® TECHNOLOGY
THE CDS TECHNOLOGY SHOWN IS PROTECTED BY ONE OR MORE OF THE FOLLOWING U.S. PATENTS: 5,498,323; 5,725,760; 5,753,115; 6,027,639; 6,641,720; 6,511,595; 6,649,048; 6,511,594; 6,649,049; 6,511,593; 6,649,050; 6,511,596; 6,649,051; 6,649,052; 6,511,597; 6,649,053; 6,511,598; 6,649,054; 6,511,599; 6,649,055; 6,511,600; 6,649,056; 6,511,601; 6,649,057; 6,511,602; 6,649,058; 6,511,603; 6,649,059; 6,511,604; 6,649,060; 6,511,605; 6,649,061; 6,511,606; 6,649,062; 6,511,607; 6,649,063; 6,511,608; 6,649,064; 6,511,609; 6,649,065; 6,511,610; 6,649,066; 6,511,611; 6,649,067; 6,511,612; 6,649,068; 6,511,613; 6,649,069; 6,511,614; 6,649,070; 6,511,615; 6,649,071; 6,511,616; 6,649,072; 6,511,617; 6,649,073; 6,511,618; 6,649,074; 6,511,619; 6,649,075; 6,511,620; 6,649,076; 6,511,621; 6,649,077; 6,511,622; 6,649,078; 6,511,623; 6,649,079; 6,511,624; 6,649,080; 6,511,625; 6,649,081; 6,511,626; 6,649,082; 6,511,627; 6,649,083; 6,511,628; 6,649,084; 6,511,629; 6,649,085; 6,511,630; 6,649,086; 6,511,631; 6,649,087; 6,511,632; 6,649,088; 6,511,633; 6,649,089; 6,511,634; 6,649,090; 6,511,635; 6,649,091; 6,511,636; 6,649,092; 6,511,637; 6,649,093; 6,511,638; 6,649,094; 6,511,639; 6,649,095; 6,511,640; 6,649,096; 6,511,641; 6,649,097; 6,511,642; 6,649,098; 6,511,643; 6,649,099; 6,511,644; 6,649,100; 6,511,645; 6,649,101; 6,511,646; 6,649,102; 6,511,647; 6,649,103; 6,511,648; 6,649,104; 6,511,649; 6,649,105; 6,511,650; 6,649,106; 6,511,651; 6,649,107; 6,511,652; 6,649,108; 6,511,653; 6,649,109; 6,511,654; 6,649,110; 6,511,655; 6,649,111; 6,511,656; 6,649,112; 6,511,657; 6,649,113; 6,511,658; 6,649,114; 6,511,659; 6,649,115; 6,511,660; 6,649,116; 6,511,661; 6,649,117; 6,511,662; 6,649,118; 6,511,663; 6,649,119; 6,511,664; 6,649,120; 6,511,665; 6,649,121; 6,511,666; 6,649,122; 6,511,667; 6,649,123; 6,511,668; 6,649,124; 6,511,669; 6,649,125; 6,511,670; 6,649,126; 6,511,671; 6,649,127; 6,511,672; 6,649,128; 6,511,673; 6,649,129; 6,511,674; 6,649,130; 6,511,675; 6,649,131; 6,511,676; 6,649,132; 6,511,677; 6,649,133; 6,511,678; 6,649,134; 6,511,679; 6,649,135; 6,511,680; 6,649,136; 6,511,681; 6,649,137; 6,511,682; 6,649,138; 6,511,683; 6,649,139; 6,511,684; 6,649,140; 6,511,685; 6,649,141; 6,511,686; 6,649,142; 6,511,687; 6,649,143; 6,511,688; 6,649,144; 6,511,689; 6,649,145; 6,511,690; 6,649,146; 6,511,691; 6,649,147; 6,511,692; 6,649,148; 6,511,693; 6,649,149; 6,511,694; 6,649,150; 6,511,695; 6,649,151; 6,511,696; 6,649,152; 6,511,697; 6,649,153; 6,511,698; 6,649,154; 6,511,699; 6,649,155; 6,511,700; 6,649,156; 6,511,701; 6,649,157; 6,511,702; 6,649,158; 6,511,703; 6,649,159; 6,511,704; 6,649,160; 6,511,705; 6,649,161; 6,511,706; 6,649,162; 6,511,707; 6,649,163; 6,511,708; 6,649,164; 6,511,709; 6,649,165; 6,511,710; 6,649,166; 6,511,711; 6,649,167; 6,511,712; 6,649,168; 6,511,713; 6,649,169; 6,511,714; 6,649,170; 6,511,715; 6,649,171; 6,511,716; 6,649,172; 6,511,717; 6,649,173; 6,511,718; 6,649,174; 6,511,719; 6,649,175; 6,511,720; 6,649,176; 6,511,721; 6,649,177; 6,511,722; 6,649,178; 6,511,723; 6,649,179; 6,511,724; 6,649,180; 6,511,725; 6,649,181; 6,511,726; 6,649,182; 6,511,727; 6,649,183; 6,511,728; 6,649,184; 6,511,729; 6,649,185; 6,511,730; 6,649,186; 6,511,731; 6,649,187; 6,511,732; 6,649,188; 6,511,733; 6,649,189; 6,511,734; 6,649,190; 6,511,735; 6,649,191; 6,511,736; 6,649,192; 6,511,737; 6,649,193; 6,511,738; 6,649,194; 6,511,739; 6,649,195; 6,511,740; 6,649,196; 6,511,741; 6,649,197; 6,511,742; 6,649,198; 6,511,743; 6,649,199; 6,511,744; 6,649,200; 6,511,745; 6,649,201; 6,511,746; 6,649,202; 6,511,747; 6,649,203; 6,511,748; 6,649,204; 6,511,749; 6,649,205; 6,511,750; 6,649,206; 6,511,751; 6,649,207; 6,511,752; 6,649,208; 6,511,753; 6,649,209; 6,511,754; 6,649,210; 6,511,755; 6,649,211; 6,511,756; 6,649,212; 6,511,757; 6,649,213; 6,511,758; 6,649,214; 6,511,759; 6,649,215; 6,511,760; 6,649,216; 6,511,761; 6,649,217; 6,511,762; 6,649,218; 6,511,763; 6,649,219; 6,511,764; 6,649,220; 6,511,765; 6,649,221; 6,511,766; 6,649,222; 6,511,767; 6,649,223; 6,511,768; 6,649,224; 6,511,769; 6,649,225; 6,511,770; 6,649,226; 6,511,771; 6,649,227; 6,511,772; 6,649,228; 6,511,773; 6,649,229; 6,511,774; 6,649,230; 6,511,775; 6,649,231; 6,511,776; 6,649,232; 6,511,777; 6,649,233; 6,511,778; 6,649,234; 6,511,779; 6,649,235; 6,511,780; 6,649,236; 6,511,781; 6,649,237; 6,511,782; 6,649,238; 6,511,783; 6,649,239; 6,511,784; 6,649,240; 6,511,785; 6,649,241; 6,511,786; 6,649,242; 6,511,787; 6,649,243; 6,511,788; 6,649,244; 6,511,789; 6,649,245; 6,511,790; 6,649,246; 6,511,791; 6,649,247; 6,511,792; 6,649,248; 6,511,793; 6,649,249; 6,511,794; 6,649,250; 6,511,795; 6,649,251; 6,511,796; 6,649,252; 6,511,797; 6,649,253; 6,511,798; 6,649,254; 6,511,799; 6,649,255; 6,511,800; 6,649,256; 6,511,801; 6,649,257; 6,511,802; 6,649,258; 6,511,803; 6,649,259; 6,511,804; 6,649,260; 6,511,805; 6,649,261; 6,511,806; 6,649,262; 6,511,807; 6,649,263; 6,511,808; 6,649,264; 6,511,809; 6,649,265; 6,511,810; 6,649,266; 6,511,811; 6,649,267; 6,511,812; 6,649,268; 6,511,813; 6,649,269; 6,511,814; 6,649,270; 6,511,815; 6,649,271; 6,511,816; 6,649,272; 6,511,817; 6,649,273; 6,511,818; 6,649,274; 6,511,819; 6,649,275; 6,511,820; 6,649,276; 6,511,821; 6,649,277; 6,511,822; 6,649,278; 6,511,823; 6,649,279; 6,511,824; 6,649,280; 6,511,825; 6,649,281; 6,511,826; 6,649,282; 6,511,827; 6,649,283; 6,511,828; 6,649,284; 6,511,829; 6,649,285; 6,511,830; 6,649,286; 6,511,831; 6,649,287; 6,511,832; 6,649,288; 6,511,833; 6,649,289; 6,511,834; 6,649,290; 6,511,835; 6,649,291; 6,511,836; 6,649,292; 6,511,837; 6,649,293; 6,511,838; 6,649,294; 6,511,839; 6,649,295; 6,511,840; 6,649,296; 6,511,841; 6,649,297; 6,511,842; 6,649,298; 6,511,843; 6,649,299; 6,511,844; 6,649,300; 6,511,845; 6,649,301; 6,511,846; 6,649,302; 6,511,847; 6,649,303; 6,511,848; 6,649,304; 6,511,849; 6,649,305; 6,511,850; 6,649,306; 6,511,851; 6,649,307; 6,511,852; 6,649,308; 6,511,853; 6,649,309; 6,511,854; 6,649,310; 6,511,855; 6,649,311; 6,511,856; 6,649,312; 6,511,857; 6,649,313; 6,511,858; 6,649,314; 6,511,859; 6,649,315; 6,511,860; 6,649,316; 6,511,861; 6,649,317; 6,511,862; 6,649,318; 6,511,863; 6,649,319; 6,511,864; 6,649,320; 6,511,865; 6,649,321; 6,511,866; 6,649,322; 6,511,867; 6,649,323; 6,511,868; 6,649,324; 6,511,869; 6,649,325; 6,511,870; 6,649,326; 6,511,871; 6,649,327; 6,511,872; 6,649,328; 6,511,873; 6,649,329; 6,511,874; 6,649,330; 6,511,875; 6,649,331; 6,511,876; 6,649,332; 6,511,877; 6,649,333; 6,511,878; 6,649,334; 6,511,879; 6,649,335; 6,511,880; 6,649,336; 6,511,881; 6,649,337; 6,511,882; 6,649,338; 6,511,883; 6,649,339; 6,511,884; 6,649,340; 6,511,885; 6,649,341; 6,511,886; 6,649,342; 6,511,887; 6,649,343; 6,511,888; 6,649,344; 6,511,889; 6,649,345; 6,511,890; 6,649,346; 6,511,891; 6,649,347; 6,511,892; 6,649,348; 6,511,893; 6,649,349; 6,511,894; 6,649,350; 6,511,895; 6,649,351; 6,511,896; 6,649,352; 6,511,897; 6,649,353; 6,511,898; 6,649,354; 6,511,899; 6,649,355; 6,511,900; 6,649,356; 6,511,901; 6,649,357; 6,511,902; 6,649,358; 6,511,903; 6,649,359; 6,511,904; 6,649,360; 6,511,905; 6,649,361; 6,511,906; 6,649,362; 6,511,907; 6,649,363; 6,511,908; 6,649,364; 6,511,909; 6,649,365; 6,511,910; 6,649,366; 6,511,911; 6,649,367; 6,511,912; 6,649,368; 6,511,913; 6,649,369; 6,511,914; 6,649,370; 6,511,915; 6,649,371; 6,511,916; 6,649,372; 6,511,917; 6,649,373; 6,511,918; 6,649,374; 6,511,919; 6,649,375; 6,511,920; 6,649,376; 6,511,921; 6,649,377; 6,511,922; 6,649,378; 6,511,923; 6,649,379; 6,511,924; 6,649,380; 6,511,925; 6,649,381; 6,511,926; 6,649,382; 6,511,927; 6,649,383; 6,511,928; 6,649,384; 6,511,929; 6,649,385; 6,511,930; 6,649,386; 6,511,931; 6,649,387; 6,511,932; 6,649,388; 6,511,933; 6,649,389; 6,511,934; 6,649,390; 6,511,935; 6,649,391; 6,511,936; 6,649,392; 6,511,937; 6,649,393; 6,511,938; 6,649,394; 6,511,939; 6,649,395; 6,511,940; 6,649,396; 6,511,941; 6,649,397; 6,511,942; 6,649,398; 6,511,943; 6,649,399; 6,511,944; 6,649,400; 6,511,945; 6,649,401; 6,511,946; 6,649,402; 6,511,947; 6,649,403; 6,511,948; 6,649,404; 6,511,949; 6,649,405; 6,511,950; 6,649,406; 6,511,951; 6,649,407; 6,511,952; 6,649,408; 6,511,953; 6,649,409; 6,511,954; 6,649,410; 6,511,955; 6,649,411; 6,511,956; 6,649,412; 6,511,957; 6,649,413; 6,511,958; 6,649,414; 6,511,959; 6,649,415; 6,511,960; 6,649,416; 6,511,961; 6,649,417; 6,511,962; 6,649,418; 6,511,963; 6,649,419; 6,511,964; 6,649,420; 6,511,965; 6,649,421; 6,511,966; 6,649,422; 6,511,967; 6,649,423; 6,511,968; 6,649,424; 6,511,969; 6,649,425; 6,511,970; 6,649,426; 6,511,971; 6,649,427; 6,511,972; 6,649,428; 6,511,973; 6,649,429; 6,511,974; 6,649,430; 6,511,975; 6,649,431; 6,511,976; 6,649,432; 6,511,977; 6,649,433; 6,511,978; 6,649,434; 6,511,979; 6,649,435; 6,511,980; 6,649,436; 6,511,981; 6,649,437; 6,511,982; 6,649,438; 6,511,983; 6,649,439; 6,511,984; 6,649,440; 6,511,985; 6,649,441; 6,511,986; 6,649,442; 6,511,987; 6,649,443; 6,511,988; 6,649,444; 6,511,989; 6,649,445; 6,511,990; 6,649,446; 6,511,991; 6,649,447; 6,511,992; 6,649,448; 6,511,993; 6,649,449; 6,511,994; 6,649,450; 6,511,995; 6,649,451; 6,511,996; 6,649,452; 6,511,997; 6,649,453; 6,511,998; 6,649,454; 6,511,999; 6,649,455; 6,512,000; 6,649,456; 6,512,001; 6,649,457; 6,512,002; 6,649,458; 6,512,003; 6,649,459; 6,512,004; 6,649,460; 6,512,005; 6,649,461; 6,512,006; 6,649,462; 6,512,007; 6,649,463; 6,512,008; 6,649,464; 6,512,009; 6,649,465; 6,512,010; 6,649,466; 6,512,011; 6,649,467; 6,512,012; 6,649,468; 6,512,013; 6,649,469; 6,512,014; 6,649,470; 6,512,015; 6,649,471; 6,512,016; 6,649,472; 6,512,017; 6,649,473; 6,512,018; 6,649,474; 6,512,019;

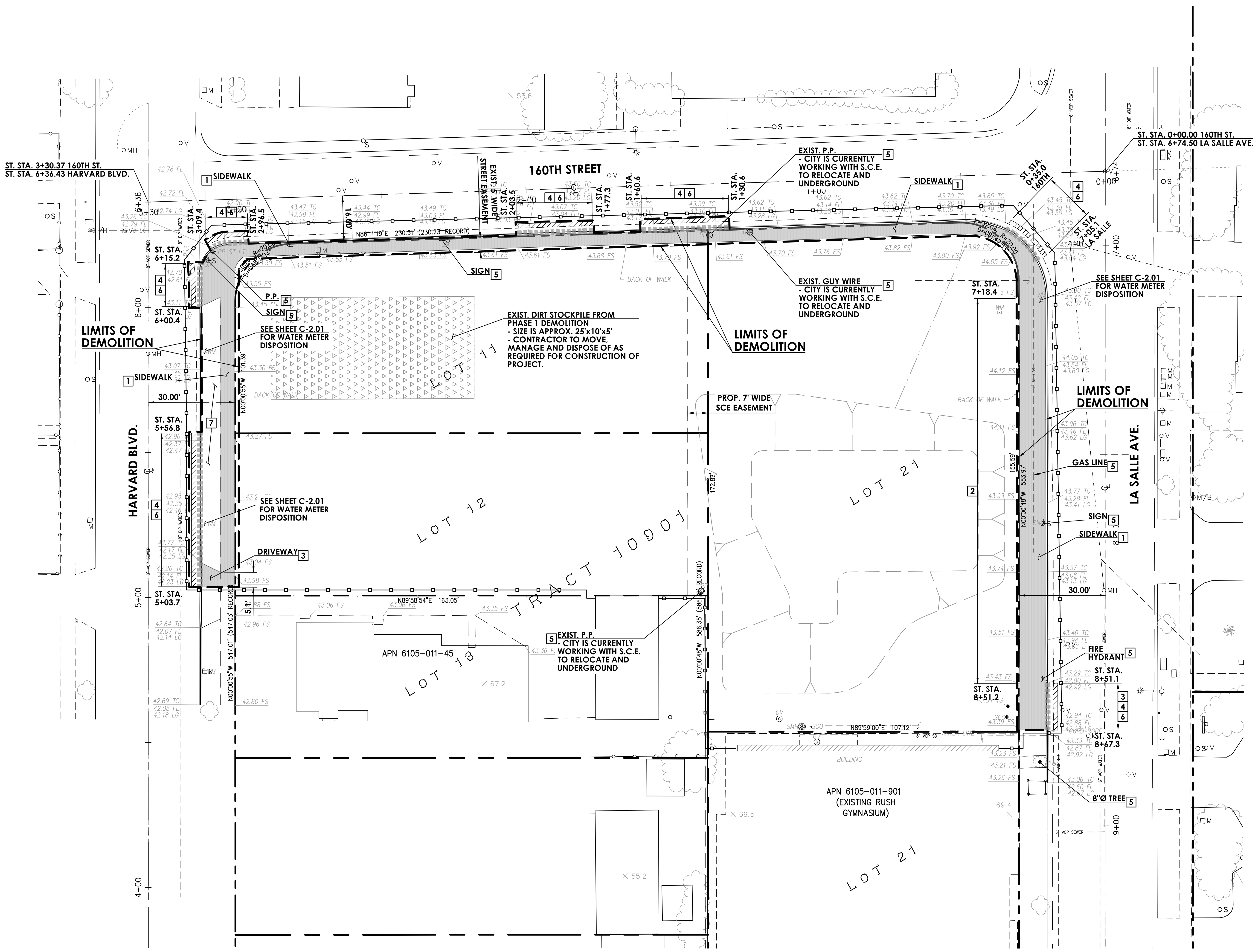

NOTE TO CONTRACTOR:

CONTRACTOR TO SCHEDULE A SITE WALK WITH THE CITY PRIOR TO START OF DEMOLITION TO VERIFY ALL ITEMS TO BE DEMOLISHED.

ENGINEER OF RECORD STATEMENT

ALL EASEMENTS HAVE BEEN SHOWN AS PER PROVIDED PRELIMINARY TITLE REPORTS BY FIDELITY NATIONAL TITLE CO. (ORDER NO. 987-30076643-1RV, DATED OCT. 28, 2021), LAWYERS TITLE (FILE NO. 218254769, DATED SEPT. 7, 2018), AND FIDELITY NATIONAL TITLE CO. (ORDER NO. 989-30033538-D-DL1, DATED FEB. 9, 2021).

THOMAS E. CARCELLI, P.E. — 10/2/2023 DATE

NOTE TO CONTRACTOR:

ALL WORK OUTSIDE OF THE PROPERTY LINES WILL REQUIRE A SEPARATE ENCROACHMENT PERMIT BY THE CITY OF GARDENA.

DEMOLITION GENERAL NOTES

1. CONTRACTOR SHALL CONDUCT A SURVEY OF EXISTING CONDITIONS AND CORRELATE WITH REQUIREMENTS INDICATED TO DETERMINE AND VERIFY THE EXTENT OF DEMOLITION REQUIRED.
2. CONTRACTOR SHALL RECORD EXISTING CONDITIONS BY USE OF PRE-CONSTRUCTION PHOTOGRAPHS, PRE-CONSTRUCTION VIDEOTAPES, AND DRAWINGS AS APPROPRIATE.
3. A SURVEY SHALL BE PERFORMED AS WORK PROGRESSES TO DETECT HAZARDS RESULTING FROM DEMOLITION ACTIVITIES.
4. CONTRACTOR SHALL KEEP INVENTORY AND RECORD THE CONDITION OF ITEMS TO BE REMOVED.
5. LOCATE ALL EXISTING UTILITIES WHETHER SHOWN HEREON OR NOT AS THE FIRST ITEM OF WORK AND PROTECT THEM FROM DAMAGE. NOTIFY OWNER IMMEDIATELY IF DAMAGE OCCURS AND ASSUME FULL RESPONSIBILITY FOR EXPENSE OF REPAIR OR REPLACEMENT. NOTIFY OWNER'S REPRESENTATIVE IMMEDIATELY SHOULD FIELD CONDITIONS VARY FROM THOSE SHOWN ON PLAN.
6. WHEN UNANTICIPATED ELECTRICAL, STRUCTURAL, OR OTHER ELEMENTS INCLUDING STORM DRAIN, WATER AND SEWER LINES THAT CONFLICT WITH INTENDED DESIGN ARE ENCOUNTERED, CONTRACTOR SHALL INVESTIGATE AND MEASURE THE NATURE AND EXTENT OF CONFLICT AND CONTRACTOR SHALL PROMPTLY SUBMIT A WRITTEN REPORT TO THE CITY.
7. CONTRACTOR SHALL LOCATE, IDENTIFY, DISCONNECT, AND SEAL OR CAP OFF INDICATED UTILITY SERVICES AND MECHANICAL/ELECTRICAL SYSTEMS SERVING AREAS TO BE SELECTIVELY DEMOLISHED AND:
   - SHALL ARRANGE TO SHUT OFF INDICATED UTILITIES WITH UTILITY COMPANIES.
   - IF SERVICES/SYSTEMS ARE REQUIRED TO BE REMOVED, RELOCATED, OR ABANDONED, BEFORE PROCEEDING WITH DEMOLITION CONTRACTOR SHALL PROVIDE TEMPORARY SERVICES/SYSTEMS THAT BYPASS AREA OF DEMOLITION AND THAT MAINTAIN CONTINUITY OF SERVICES/SYSTEMS TO OTHER PARTS OF BUILDING AND SITE.
   - SHALL CUT OFF PIPE OR CONDUIT IN WALLS TO BE REMOVED. CAP, VALVE, OR PLUG AND SEAL REMAINING PORTION OF PIPE OR CONDUIT AFTER BYPASSING. WHERE ENTIRE WALL IS TO BE REMOVED, EXISTING SERVICES/SYSTEMS MAY BE REMOVED WITH REMOVAL OF THE WALL. CONTRACTOR SHALL CUT OFF PIPE OR CONDUIT SO IT WILL NOT BE VISIBLE IN FINISHED CONSTRUCTION.
9. CONTRACTOR SHALL PROTECT EXISTING SERVICES/SYSTEMS INDICATED AGAINST DAMAGE DURING DEMOLITION OPERATIONS.
10. INACTIVE OR ABANDONED UTILITIES SHALL BE DISCONNECTED, REMOVED, AND PLUGGED OR CAPPED SUBJECT TO THE LOCAL GOVERNING AGENCIES.
11. ACTIVE UTILITIES SHALL BE PROTECTED BY AND AT THE EXPENSE OF THE CONTRACTOR. KEEP ANY REQUIRED UTILITY IN OPERATING CONDITION DURING THE ENTIRE PERIOD OF WORK, INCLUDING EXISTING IRRIGATION SYSTEMS FOR LANDSCAPE MAINTENANCE.
12. DO NOT WILLFULLY PROCEED WITH CONSTRUCTION WHEN IT IS OBVIOUS THAT KNOWN OBSTRUCTIONS EXIST THAT MAY NOT HAVE BEEN KNOWN DURING DESIGN. SUCH CONDITIONS SHALL BE IMMEDIATELY BROUGHT TO THE ATTENTION OF THE OWNER'S AUTHORIZED REPRESENTATIVE. ASSUME RESPONSIBILITY FOR ALL NECESSARY REVISION DUE TO FAILURE TO GIVE SUCH NOTIFICATION.
13. CONTRACTOR SHALL CONDUCT DEMOLITION AND DEBRIS-REMOVAL OPERATIONS TO ENSURE MINIMUM INTERFERENCE WITH ROADS, STREETS, WALKS, WALKWAYS, AND OTHER ADJACENT OCCUPIED AND USED FACILITIES.
14. CONTRACTOR SHALL PROVIDE TEMPORARY BARRICADES AND OTHER PROTECTION REQUIRED TO PREVENT INJURY TO PEOPLE AND DAMAGE TO ADJACENT BUILDINGS AND FACILITIES TO REMAIN AND:
   - SHALL PROVIDE TEMPORARY WEATHER PROTECTION, DURING THE INTERVAL BETWEEN DEMOLITION OF EXISTING CONSTRUCTION ON EXTERIOR SURFACES AND NEW CONSTRUCTION, TO PREVENT WATER LEAKAGE AND DAMAGE TO STRUCTURE AND INTERIOR AREAS.
   - SHALL PROTECT WORK THAT IS TO REMAIN OR THAT IS EXPOSED DURING DEMOLITION OPERATIONS.
   - SHALL COVER AND PROTECT EQUIPMENT THAT HAS NOT BEEN REMOVED.
15. CONTRACTOR SHALL PROVIDE AND MAINTAIN SHORING, BRACING, AND STRUCTURAL SUPPORTS AS REQUIRED TO PRESERVE STABILITY AND PREVENT MOVEMENT, SETTLEMENT, OR COLLAPSE OF CONSTRUCTION AND FINISHES THAT REMAIN, AND TO PREVENT UNEXPECTED OR UNCONTROLLED MOVEMENT OR COLLAPSE OF CONSTRUCTION BEING DEMOLISHED. CONTRACTOR SHALL STRENGTHEN OR ADD NEW SUPPORTS WHEN REQUIRED DURING PROGRESS OF DEMOLITION.
16. DEMOLITION AND REMOVAL WORK SHALL BE CAREFULLY PERFORMED TO AVOID DAMAGE TO EXISTING TREES NOTED ON THE PLANS TO REMAIN.
17. ALL WORK SHALL CONFORM TO THE REQUIREMENTS OF THE LATEST ADOPTED EDITIONS OF THE UNIFORM BUILDING CODE, THE AMERICANS WITH DISABILITIES ACT, AND ALL OTHER APPLICABLE LOCAL AND STATE CODES, ORDINANCES AND REGULATIONS.
18. CONTRACTOR SHALL USE METHODS REQUIRED TO COMPLETE THE WORK WITHIN THE LIMITATIONS OF GOVERNING REGULATIONS AND AS FOLLOWS:
   - SHALL NEATLY CUT OPENINGS AND HOLES PLUMB, SQUARE, AND TRUE TO DIMENSIONS REQUIRED, USING CUTTING METHODS LEAST LIKELY TO DAMAGE CONSTRUCTION TO REMAIN OR ADJOINING CONSTRUCTION. USE HAND TOOLS OR SMALL POWER TOOLS DESIGNED FOR SAWING OR GRINDING, NOT HAMMERING AND CHOPPING, TO MINIMIZE DISTURBANCE OF ADJACENT SURFACES. TEMPORARILY COVER OPENINGS TO REMAIN.
   - SHALL CUT OR DRILL FROM THE EXPOSED OR FINISHED SIDE INTO CONCEALED SURFACES TO AVOID MARRING EXISTING FINISHED SURFACES.
   - SHALL NOT USE CUTTING TORCHES UNTIL WORK AREA IS CLEARED OF FLAMMABLE MATERIALS. AT CONCEALED SPACES, SUCH AS DUCT AND PIPE INTERIORS, VERIFY CONDITION AND CONTENTS OF HIDDEN SPACE BEFORE STARTING FLAME-CUTTING OPERATIONS. MAINTAIN FIRE WATCH AND PORTABLE FIRE-SUPPRESSION DEVICES DURING FLAME-CUTTING OPERATIONS.
   - SHALL MAINTAIN ADEQUATE VENTILATION WHEN USING CUTTING TORCHES.
   - SHALL REMOVE DECAYED, TERMITE-INFESTED, VERMIN-INFESTED, OR OTHERWISE DANGEROUS OR UNSUITABLE MATERIALS AND PROMPTLY DISPOSE OF OFF-SITE.
   - SHALL LOCATE DEMOLITION EQUIPMENT AND REMOVE DEBRIS AND MATERIALS SO AS NOT TO IMPOSE EXCESSIVE LOADS ON STRUCTURES TO REMAIN.
19. CLEAR THE SITE OF GRASS, WEED GROWTH, RUBBISH, DEBRIS, PAVEMENT, CONCRETE, INACTIVE OR ABANDONED FACILITIES (VERIFIED BY THE AGENCY), THAT ARE TO BE REMOVED FOR CONSTRUCTION OF THE SITE IMPROVEMENTS TO THE LIMITS AND DEPTHS SHOWN ON THE PLANS.
20. ABANDONED UNDERGROUND FACILITIES (VERIFIED BY THE AGENCY), ROOTS THREE INCHES IN DIAMETER AND LARGER, AND ROCKS AND BROKEN MASONRY LARGER THAN 4 INCHES IN ANY DIMENSION SHALL BE REMOVED TO A MINIMUM DEPTH OF 12" BELOW FINISH GRADE.
21. ALL DELETERIOUS MATERIALS WITHIN THE LIMITS OF THE WORK SHALL BE DISPOSED OF OFF-SITE BY THE CONTRACTOR, WHO SHALL MAKE ALL NECESSARY ARRANGEMENTS AND PAY ALL RELATED COSTS.
22. CONTRACTOR SHALL REMOVE DEMOLISHED MATERIALS FROM PROJECT SITE AND LEGALLY DISPOSE OF THEM AT THE CONTRACTOR'S EXPENSE IN AN EPA-APPROVED LANDFILL AND:
   - SHALL NOT ALLOW DEMOLISHED MATERIALS TO ACCUMULATE ON-SITE.
   - SHALL REMOVE AND TRANSPORT DEBRIS IN A MANNER THAT WILL PREVENT SPILLAGE ON ADJACENT SURFACES AND AREAS.
23. CONTRACTOR SHALL NOT BURN DEMOLISHED MATERIALS.
24. CONTRACTOR SHALL CLEAN ADJACENT STRUCTURES AND IMPROVEMENTS OF DUST, DIRT, AND DEBRIS CAUSED BY DEMOLITION OPERATIONS AND RETURN ADJACENT AREAS TO CONDITION EXISTING BEFORE DEMOLITION OPERATIONS BEGAN.

DEMOLITION NOTES

No.	Description	ESTIMATED QUANTITY
1	SAWCUT AND REMOVE EXISTING CONCRETE CONCRETE OR PAD (COMPLETE) AND DISPOSE ****	3,460 SF
2	REMOVE EXISTING WALL FOOTING (COMPLETE) AND DISPOSE	135 LF
3	REMOVE EXISTING DRIVEWAY AND GUTTER (COMPLETE) AND DISPOSE	2 EA
4	REMOVE EXISTING A.C./A.B. PAVEMENT (COMPLETE) AND DISPOSE	170 LF
5	PROTECT IN PLACE - POTHOLE AND LOCATE EXISTING UNDERGROUND UTILITY LINES TO PROTECT AS REQUIRED	-
6	REMOVE EXISTING CURB AND GUTTER (COMPLETE) AND DISPOSE	170 LF
7	REMOVE EXISTING LANDSCAPE/IRRIGATION AND CAP AT LIMITS OF DEMOLITION AND DISPOSE **	585 SF

** CAP AND REMOVE IRRIGATION LINES AS REQ'D

**** SEE SOILS REPORT FOR ADDITIONAL DEMOLITION REQUIREMENTS

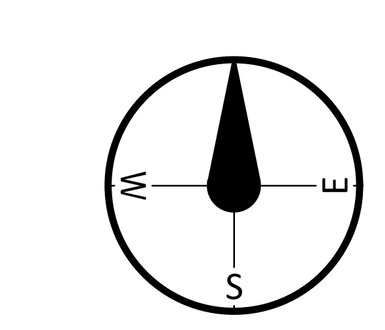

SCALE: 1" = 20'

0 10 20 40

NOTE TO CONTRACTOR:

ALL UTILITIES SHOULD BE SHUT OFF AND CAPPED PER UTILITY COMPANY REQUIREMENTS.
CONTRACTOR SHALL COORDINATE WITH APPROPRIATE UTILITY COMPANY PRIOR TO COMMENCEMENT OF WORK.

NOTE TO CONTRACTOR:

INSTALL 6-FOOT CHAIN LINK FENCE WITH WINDSCREEN AND GATES, WHERE NECESSARY, ALONG THE PERIMETER OF THE SITE AS NEEDED. CONTRACTOR SHALL PROTECT THESE FENCES AND KEEP AREA FULLY SECURE DURING DEMOLITION. PROJECT FENCE, GATE, PRIVATE SCREEN, PERIMETER WATER POLLUTION CONTROL SHALL BECOME THE PROPERTY OF THE CITY AND SHALL REMAIN IN PLACE AT THE COMPLETION OF DEMOLITION.

NOTE TO CONTRACTOR:

- LOCATION OF EXISTING FACILITIES SHOWN HEREON ARE BASED ON THE EXISTING TOPOGRAPHIC SURVEY PERFORMED BY civTEC, INC., DATED FEBRUARY, 2021, FIELD OBSERVATION AND A SEARCH OF AVAILABLE RECORDS AND MAY NOT REPRESENT ACTUAL CONDITIONS.
- CONTRACTOR MUST FIELD LOCATE ALL UTILITIES (LOCATION AND DEPTH) WITHIN WORK AREA AS A FIRST ITEM OF WORK AND VERIFY PROPOSED DESIGN IS VALID.
- CONTRACTOR SHALL PROTECT IN PLACE THE UTILITY LINES SHOWN AND ANY OTHER LINES NOT OF RECORD OR NOT SHOWN ON THESE PLANS. CONTRACTOR SHALL BE RESPONSIBLE FOR ANY DAMAGE TO THE EXISTING UTILITY LINES.
- CONTRACTOR TO VERIFY AND INFORM THE CITY OF ANY FACILITIES ENCOUNTERED IN THE FIELD WHICH IS NOT SHOWN ON THIS PLAN, OR DIFFERS IN LOCATION OR SIZE, PRIOR TO REMOVAL.
- THE CITY MAY IDENTIFY AND REMOVE ANY ITEMS THEY WISH TO RETAIN PRIOR TO THE CONTRACTOR MOVE IN.

NOTE TO CONTRACTOR:

EXACT LOCATION OF EXISTING UNDERGROUND STORM DRAIN LINES ON-SITE ARE UNKNOWN. CONTRACTOR SHALL:

- VERIFY LOCATION, SIZE, ELEVATIONS OF EXISTING STORM DRAIN AND VERIFY DESIGN AS A FIRST ITEM OF WORK. NOTIFY ENGINEER IMMEDIATELY OF ANY REQUIRED CHANGE IN DESIGN.
- CAP EXISTING STORM DRAIN AT DEMOLITION LIMITS - NOTIFY ENGINEER OF ALL LOCATIONS, SIZES AND INVERT ELEVATIONS AT COMPLETION OF DEMOLITION.
- IF INLET PIPES ARE FOUND CONNECTING TO EXISTING GRATES THAT ARE REMOVED DURING THE CONSTRUCTION OF THIS PROJECT (OR PIPES ARE DAMAGED OR REMOVED DURING CONSTRUCTION) THAT RUN OUTSIDE OF DEMOLITION LIMITS, NOTIFY ENGINEER IMMEDIATELY OF THE LOCATION AND SIZE TO INSURE CONTINUITY OF DRAINAGE UPSTREAM.

UTILITY CONTACT NUMBERS:

COMPANY	CONTACT	TELEPHONE NO.
CITY OF GARDENA P.W. TRAFFIC/ELECTRICAL	JEFF JALOMO	310-217-9430
GOLDEN STATE WATER CO.	JOSEPH SALICIDO CONDE VENTURA	310-660-0320 X101 310-701-2500
CALIFORNIA UNDERGROUND SERVICE ALERT (USA)		800-422-4133

LEGEND

- LIMITS OF DEMOLITION
- REMOVAL OF EXISTING CURB & GUTTER
- 6-FOOT TALL CONSTRUCTION FENCE - LOCATION MAY BE REVISED WITH CITY APPROVAL

DIGALERT — DIAL TOLL FREE 1-800-422-4133 — AT LEAST TWO DAYS BEFORE YOU DIG — UNDERGROUND SERVICE ALERT OF SOUTHERN CALIFORNIA

BASIS OF BEARINGS:

BEARINGS SHOWN HEREON ARE BASED ON THE CENTERLINE OF 162 ND STREET (FORMERLY MARKET STREET) BEING N 89° 55' 30" E SHOWN ON TRACT NO. 10901, M.B. 254/31-32

BENCHMARK:

THE CITY OF GARDENA BENCHMARK NO. 5D-15 ELEV. = 43.508

CITY OF GARDENA — FREEWAY CITY — INCORPORATED 1930

CONSULTANT:
civTEC
999 CORPORATE DR.
SUITE 100
LADERA RANCH, CA 92694
p: 949.463.8822
e: tec@civtec.net

REGISTERED PROFESSIONAL ENGINEER — THOMAS E. CARCELLI — C-81640 — Exp. 09-30-23 — CIVIL — STATE OF CALIFORNIA
10/11/2023

PREPARED UNDER THE SUPERVISION OF:
RJM DESIGN GROUP
31591 Camino Capistrano
San Juan Capistrano, CA 92675
www.RJMdesigngroup.com
[949] 493-2690 *fax*
[949] 493-2600 *phone*

LICENSED LANDSCAPE ARCHITECT — LARRY P. RYAN LICENSE NO. 2502 — Signature — 09/30/2025 Renewal Date — 10/11/2023 Date — STATE OF CALIFORNIA

REVISIONS

NO.	DESCRIPTION	DATE	APPROVED
1	90% CD SUBMITTAL	12/15/2022	
2	100% CD SUBMITTAL	05/01/2023	
3	FINAL SUBMITTAL	10/02/2023	

B.M.: THE CITY OF GARDENA BENCHMARK NO. 5D-15 ELEV. = 43.508'

CITY OF GARDENA

DEPARTMENT OF PUBLIC WORKS - ENGINEERING

DEMOLITION PLAN
COMMUNITY AQUATICS & SENIOR CENTER
D-1.01

	INITAL	DATE
DESIGNED BY	TEC	
DRAWN BY	STAFF	
CHECKED BY	TEC	

APPROVED BY:

DATE — DIRECTOR OF PUBLIC WORKS

SHT. 9 OF 195 — DWG. NO. 5-2606

PLOT DATE: 10/11/2023

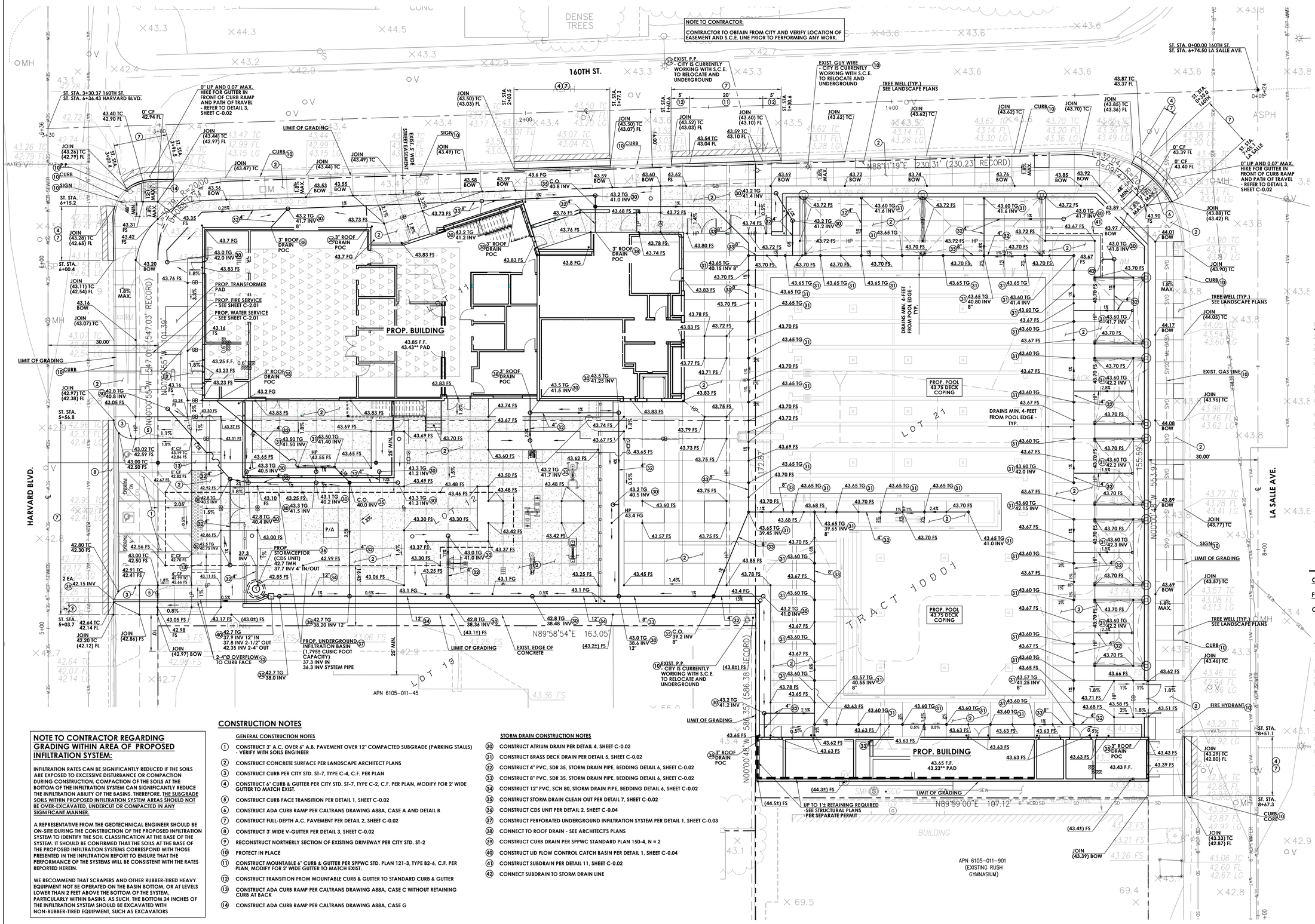

* NOTE TO CONTRACTOR:

CONTRACTOR TO VERIFY ELEVATION PRIOR TO CONSTRUCTION AND NOTIFY CIVIL ENGINEER IMMEDIATELY OF ANY DISCREPANCY.

** NOTE TO CONTRACTOR:

VERIFY STRUCT. SLAB SECTION [ASSUMED 5" PCC / VAPOR BARRIER] W/STRUCTURAL DRAWINGS AND SOILS ENGINEER'S REPORT PRIOR TO CONSTRUCTION AND NOTIFY CIVIL ENGINEER IMMEDIATELY OF ANY DISCREPANCY.

NOTE TO CONTRACTOR:

LOCATE ALL EXISTING UTILITIES AS A FIRST ITEM OF WORK AND PROTECT THEM IN PLACE AS REQUIRED.

NOTE TO CONTRACTOR:

ALL GRADING AND EARTHWORK IS TO BE DONE IN ACCORDANCE WITH THE EARTHWORK SPECIFICATION AND AS DIRECTED BY THE GEOTECHNICAL ENGINEER.

ENGINEER OF RECORD STATEMENT

ALL EASEMENTS HAVE BEEN SHOWN AS PER PROVIDED PRELIMINARY TITLE REPORTS BY FIDELITY NATIONAL TITLE CO. (ORDER NO. 987-30076643-18V, DATED OCT. 28, 2021), LAWYERS TITLE (FILE NO. 218254769, DATED SEPT. 7, 2018), AND FIDELITY NATIONAL TITLE CO. (ORDER NO. 989-30033538-D-DL1, DATED FEB. 9, 2021).

THOMAS E. CARCELLI, P.E. — 10/2/2023 DATE

UTILITY CONTACT NUMBERS:

COMPANY	CONTACT	TELEPHONE NO.
CITY OF GARDENA P.W. TRAFFIC/ELECTRICAL	JEFF JALOMO	310-217-9430
CITY OF GARDENA P.W. SEWER	JOHN SCHERER	310-217-9599
METRO. WATER DISTRICT	CIVIL ENG. SUBSTRUCTURE SEC.	213-217-7059
L.A. COUNTY DEPARTMENT OF PUBLIC HEALTH		626-430-5360
L.A. DEPARTMENT OF WATER & POWER	JOSE PORRAS	213-367-1049
L.A. SANITATION DISTRICT	JON GANZ	562-908-4288
L.A. COUNTY FLOOD CONTROL DISTRICT	DARYLL CHENOWETH	626-458-3129
CHEVRON PIPELINE CO.	DAVE ZERLER	310-669-4014
CROWN CASTLE	HECTOR AGUILERA	951-454-5111
SOUTHERN CALIFORNIA EDISON COMPANY	MANNY MIGUELES	310-720-6086
SOUTHERN CALIFORNIA GAS COMPANY	SALVADOR GONZALES	310-970-4844
GOLDEN STATE WATER CO.	JOSEPH SALICIDO CONDE VENTURA	310-660-0320 X101 310-701-2500
AT&T/SBC/PACIFIC BELL	RAYMOND DOVE TERENCE LITTLE	310-515-4257 310-515-4252
TIME WARNER/SPECTRUM	ATRURO FERNANDEZ	310-750-9099
CALIFORNIA UNDERGROUND SERVICE ALERT (USA)		800-422-4133

EARTHWORK (SEE SHEET C-0.01)

CUT	850	CUBIC YARDS
FILL	1,200	CUBIC YARDS
OVER-EXCAVATION	2,500	CUBIC YARDS

SURVEYOR:

TED KRULL, PLS 5848
STARLIGHT SURVEYING, INC.
17955 SKY PARK CIR. STE F
IRVINE, CA. 92614
(949) 757-0613
DATES OF SURVEY: NOV. 2021 AND JAN. 2022

SOILS ENGINEER STATEMENT

THESE GRADING PLANS WERE REVIEWED AND APPROVED, AND THAT THEY COMPLY WITH ALL THE REQUIREMENTS AND RECOMMENDATIONS OF THE GEOTECHNICAL/SOILS REPORT (GEOTECHNICAL INVESTIGATION PROPOSED COMMUNITY AQUATIC AND SENIOR CENTER BY SOUTHERN CALIFORNIA GEOTECHNICAL, INC. DATED NOVEMBER 18, 2021 AND RESULTS OF INFILTRATION TESTING BY SOUTHERN CALIFORNIA GEOTECHNICAL DATED NOVEMBER 19, 2021) AND GEOTECHNICAL/SOILS ENGINEER.

NAME — 10/5/2023 DATE

REGISTERED PROFESSIONAL ENGINEER GREGORY K. MITCHELL No. 2964 GEOTECHNICAL STATE OF CALIFORNIA

SCALE: 1" = 10'
0 5 10 20

NOTE TO CONTRACTOR REGARDING GRADING WITHIN AREA OF PROPOSED INFILTRATION SYSTEM:

INFILTRATION RATES CAN BE SIGNIFICANTLY REDUCED IF THE SOILS ARE EXPOSED TO EXCESSIVE DISTURBANCE OR COMPACTION DURING CONSTRUCTION. COMPACTION OF THE SOILS AT THE BOTTOM OF THE INFILTRATION SYSTEM CAN SIGNIFICANTLY REDUCE THE INFILTRATION ABILITY OF THE BASINS. THEREFORE, THE SUBGRADE SOILS WITHIN PROPOSED INFILTRATION SYSTEM AREAS SHOULD NOT BE OVER-EXCAVATED, UNDERCUT OR COMPACTED IN ANY SIGNIFICANT MANNER.

A REPRESENTATIVE FROM THE GEOTECHNICAL ENGINEER SHOULD BE ON-SITE DURING THE CONSTRUCTION OF THE PROPOSED INFILTRATION SYSTEM TO IDENTIFY THE SOIL CLASSIFICATION AT THE BASE OF THE SYSTEM. IT SHOULD BE CONFIRMED THAT THE SOILS AT THE BASE OF THE PROPOSED INFILTRATION SYSTEMS CORRESPOND WITH THOSE PRESENTED IN THE INFILTRATION REPORT TO ENSURE THAT THE PERFORMANCE OF THE SYSTEMS WILL BE CONSISTENT WITH THE RATES REPORTED HEREIN.

WE RECOMMEND THAT SCRAPERS AND OTHER RUBBER-TIRED HEAVY EQUIPMENT NOT BE OPERATED ON THE BASIN BOTTOM, OR AT LEVELS LOWER THAN 2 FEET ABOVE THE BOTTOM OF THE SYSTEM, PARTICULARLY WITHIN BASINS. AS SUCH, THE BOTTOM 24 INCHES OF THE INFILTRATION SYSTEM SHOULD BE EXCAVATED WITH NON-RUBBER-TIRED EQUIPMENT, SUCH AS EXCAVATORS

CONSTRUCTION NOTES

GENERAL CONSTRUCTION NOTES

1. CONSTRUCT 3" A.C. OVER 6" A.B. PAVEMENT OVER 12" COMPACTED SUBGRADE (PARKING STALLS) - VERIFY WITH SOILS ENGINEER
2. CONSTRUCT CONCRETE SURFACE PER LANDSCAPE ARCHITECT PLANS
3. CONSTRUCT CURB PER CITY STD. ST-7, TYPE C-4, C.F. PER PLAN
4. CONSTRUCT 6" CURB & GUTTER PER CITY STD. ST-7, TYPE C-2, C.F. PER PLAN, MODIFY FOR 2' WIDE GUTTER TO MATCH EXIST.
5. CONSTRUCT CURB FACE TRANSITION PER DETAIL 1, SHEET C-0.02
6. CONSTRUCT ADA CURB RAMP PER CALTRANS DRAWING A88A, CASE A AND DETAIL B
7. CONSTRUCT FULL-DEPTH A.C. PAVEMENT PER DETAIL 2, SHEET C-0.02
8. CONSTRUCT 3' WIDE V-GUTTER PER DETAIL 3, SHEET C-0.02
9. RECONSTRUCT NORTHERLY SECTION OF EXISTING DRIVEWAY PER CITY STD. ST-2
10. PROTECT IN PLACE
11. CONSTRUCT MOUNTABLE 6" CURB & GUTTER PER SPPWC STD. PLAN 121-3, TYPE B2-6, C.F. PER PLAN, MODIFY FOR 2' WIDE GUTTER TO MATCH EXIST.
12. CONSTRUCT TRANSITION FROM MOUNTABLE CURB & GUTTER TO STANDARD CURB & GUTTER
13. CONSTRUCT ADA CURB RAMP PER CALTRANS DRAWING A88A, CASE C WITHOUT RETAINING CURB AT BACK
14. CONSTRUCT ADA CURB RAMP PER CALTRANS DRAWING A88A, CASE G

STORM DRAIN CONSTRUCTION NOTES

30. CONSTRUCT ATRIUM DRAIN PER DETAIL 4, SHEET C-0.02
31. CONSTRUCT BRASS DECK DRAIN PER DETAIL 5, SHEET C-0.02
32. CONSTRUCT 4" PVC, SDR 35, STORM DRAIN PIPE, BEDDING DETAIL 6, SHEET C-0.02
33. CONSTRUCT 8" PVC, SDR 35, STORM DRAIN PIPE, BEDDING DETAIL 6, SHEET C-0.02
34. CONSTRUCT 12" PVC, SCH 80, STORM DRAIN PIPE, BEDDING DETAIL 6, SHEET C-0.02
35. CONSTRUCT STORM DRAIN CLEAN OUT PER DETAIL 7, SHEET C-0.02
36. CONSTRUCT CDS UNIT PER DETAIL 2, SHEET C-0.04
37. CONSTRUCT PERFORATED UNDERGROUND INFILTRATION SYSTEM PER DETAIL 1, SHEET C-0.03
38. CONNECT TO ROOF DRAIN - SEE ARCHITECTS PLANS
39. CONSTRUCT CURB DRAIN PER SPPWC STANDARD PLAN 150-4, N = 2
40. CONSTRUCT LID FLOW CONTROL CATCH BASIN PER DETAIL 1, SHEET C-0.04
41. CONSTRUCT SUBDRAIN PER DETAIL 11, SHEET C-0.02
42. CONNECT SUBDRAIN TO STORM DRAIN LINE

BASIS OF BEARINGS:

BEARINGS SHOWN HEREON ARE BASED ON THE CENTERLINE OF 162 ND STREET (FORMERLY MARKET STREET) BEING N 89° 55' 30" E SHOWN ON TRACT NO. 10901, M.B. 254/31-32

BENCHMARK:

THE CITY OF GARDENA BENCHMARK NO. 5D-15 ELEV. = 43.508

DIGALERT — DIAL TOLL FREE 1-800-422-4133 — AT LEAST TWO DAYS BEFORE YOU DIG — UNDERGROUND SERVICE ALERT OF SOUTHERN CALIFORNIA

CONSULTANT:
CIVTEC
999 CORPORATE DR.
SUITE 100
LADERA RANCH, CA 92694
p: 949.463.8822
e: tec@civtec.net

REGISTERED PROFESSIONAL ENGINEER THOMAS E. CARCELLI C-81640 Exp. 09-30-23 CIVIL STATE OF CALIFORNIA — 9/26/2023

PREPARED UNDER THE SUPERVISION OF:
RJM DESIGN GROUP
31591 Camino Capistrano
San Juan Capistrano, CA 92675
www.RJMdesigngroup.com
[949] 493-2690 fax
[949] 493-2600 phone

LICENSED LANDSCAPE ARCHITECT — Signature 09/30/2023 Renewal Date 9/30/2023 — STATE OF CALIFORNIA

REVISIONS			
NO.	DESCRIPTION	DATE	APPROVED
1	90% CD SUBMITTAL	12/15/2022	
2	100% CD SUBMITTAL	05/01/2023	
3	FINAL SUBMITTAL	10/02/2023	

B.M.: THE CITY OF GARDENA BENCHMARK NO. 5D-15 ELEV. = 43.508'

CITY OF GARDENA
DEPARTMENT OF PUBLIC WORKS - ENGINEERING

PRECISE GRADING PLAN
COMMUNITY AQUATICS & SENIOR CENTER
C-1.01

	INITIAL	DATE
DESIGNED BY	TEC	
DRAWN BY	STAFF	
CHECKED BY	TEC	

APPROVED BY:
DATE
DIRECTOR OF PUBLIC WORKS
SHT. 10 OF 195
DWG. NO. 5-2606

PLOT DATE: 9/28/2023

ALL RIGHTS RESERVED

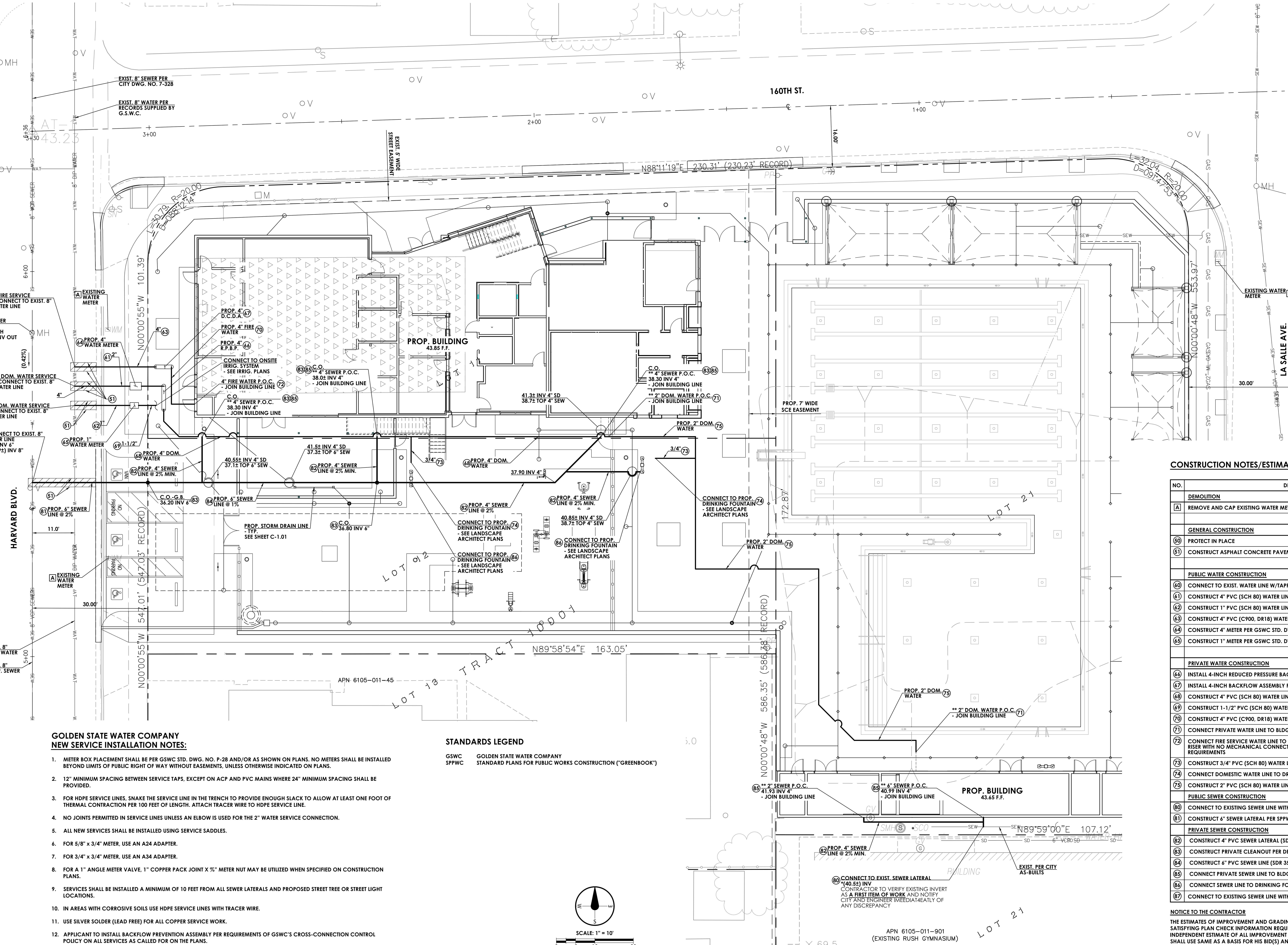

* NOTE TO CONTRACTOR:

CONTRACTOR TO VERIFY ELEVATION PRIOR TO CONSTRUCTION AND NOTIFY CITY AND CIVIL ENGINEER IMMEDIATELY OF ANY DISCREPANCY.

** NOTE TO CONTRACTOR:

VERIFY EXACT SIZE, LOCATION AND INVERT OF BUILDING SEWER P.O.C. AND SIZE AND LOCATION OF BUILDING WATER P.O.C. WITH PLUMBING DRAWINGS PRIOR TO CONSTRUCTION AND COORDINATE INSTALLATION.

NOTE TO CONTRACTOR:

LOCATE ALL EXISTING UTILITIES AS A FIRST ITEM OF WORK AND PROTECT THEM IN PLACE AS REQUIRED.

EXISTING UNDERGROUND STRUCTURES

THE EXISTENCE AND LOCATION OF ANY UNDERGROUND PIPES OR CONDUITS SHOWN ON THESE PLANS ARE OBTAINED BY A SEARCH OF THE AVAILABLE RECORDS. TO THE BEST OF OUR KNOWLEDGE, THERE ARE NO EXISTING UTILITIES EXCEPT AS SHOWN ON THESE PLANS. THE CONTRACTOR IS REQUIRED TO TAKE THE PRECAUTIONARY MEASURES TO PROTECT THE UTILITY LINES SHOWN AND ANY OTHER LINES NOT OF RECORD OR NOT SHOWN ON THESE PLANS. IT SHALL BE THE CONTRACTOR'S RESPONSIBILITY TO NOTIFY THE OWNERS OF THE UTILITIES OR STRUCTURES CONCERNED BEFORE STARTING WORK. CONTRACTOR FURTHER ASSUMES ALL LIABILITY AND RESPONSIBILITY FOR THE UNDERGROUND UTILITY PIPES, CONDUITS OR STRUCTURES SHOWN OR NOT SHOWN ON THESE PLANS. LOCATE ALL UTILITIES BEFORE CONSTRUCTION.

ENGINEER OF RECORD STATEMENT

ALL EASEMENTS HAVE BEEN SHOWN AS PER PROVIDED PRELIMINARY TITLE REPORTS BY FIDELITY NATIONAL TITLE CO. (ORDER NO. 987-30076643-1RV, DATED OCT. 28, 2021), LAWYERS TITLE (FILE NO. 218254769, DATED SEPT. 7, 2018), AND FIDELITY NATIONAL TITLE CO. (ORDER NO. 989-30033538-D-DL1, DATED FEB. 9, 2021).

THOMAS E. CARCELLI, P.E. — 10/2/2023 DATE

UTILITY CONTACT NUMBERS:

COMPANY	CONTACT	TELEPHONE NO.
CITY OF GARDENA P.W. TRAFFIC/ELECTRICAL	JEFF JALOMO	310-217-9430
GOLDEN STATE WATER CO.	JOSEPH SALICIDO CONDE VENTURA	310-660-0320 X101 310-701-2500
CALIFORNIA UNDERGROUND SERVICE ALERT (USA)		800-422-4133

CONSTRUCTION NOTES/ESTIMATE OF QUANTITIES

NO.	DESCRIPTION	QUANTITY
	DEMOLITION	
A	REMOVE AND CAP EXISTING WATER METER AND SERVICE PER GSWC STANDARDS	3 EA
	GENERAL CONSTRUCTION	
50	PROTECT IN PLACE	-
51	CONSTRUCT ASPHALT CONCRETE PAVEMENT REPLACEMENT PER SPPWC STD. PLAN 133-3	40 LF
	PUBLIC WATER CONSTRUCTION	
60	CONNECT TO EXIST. WATER LINE W/TAPPING SLEEVE & VALVE PER GSWC STD. DWG. NO. P-23	1 EA
61	CONSTRUCT 4" PVC (SCH 80) WATER LINE, BEDDING PER GSWC STD. DWG. NO. P-3	15 LF
62	CONSTRUCT 1" PVC (SCH 80) WATER LINE, BEDDING PER GSWC STD. DWG. NO. P-3	15 LF
63	CONSTRUCT 4" PVC (C900, DR18) WATER LINE, BEDDING PER GSWC STD. DWG. NO. P-3	20 LF
64	CONSTRUCT 4" METER PER GSWC STD. DWG. NO. P-30	1 EA
65	CONSTRUCT 1" METER PER GSWC STD. DWG. NO. P-26	1 EA
	PRIVATE WATER CONSTRUCTION	
66	INSTALL 4-INCH REDUCED PRESSURE BACKFLOW PREVENTOR PER GSWC STD. DWG. NO. P-35A	1 EA
67	INSTALL 4-INCH BACKFLOW ASSEMBLY FOR FIRE SERVICES PER GSWC STD. DWG. NO. P-35B	1 EA
68	CONSTRUCT 4" PVC (SCH 80) WATER LINE, BEDDING PER GSWC STD. DWG. NO. P-3	135 LF
69	CONSTRUCT 1-1/2" PVC (SCH 80) WATER LINE, BEDDING PER GSWC STD. DWG. NO. P-3	5 LF
70	CONSTRUCT 4" PVC (C900, DR18) WATER LINE, BEDDING PER GSWC STD. DWG. NO. P-3	20 LF
71	CONNECT PRIVATE WATER LINE TO BLDG. WATER LINE - SEE BUILDING PLUMBING PLANS	2 EA
72	CONNECT FIRE SERVICE WATER LINE TO BLDG. - SEE FIRE SPRINKLER PLANS - INSTALL STAINLESS STEEL FIRE RISER WITH NO MECHANICAL CONNECTIONS UNDERNEATH THE WALL OR FOUNDATION PER LACFD REQUIREMENTS	1 EA
73	CONSTRUCT 3/4" PVC (SCH 80) WATER LINE, BEDDING PER GSWC STD. DWG. NO. P-3	20 LF
74	CONNECT DOMESTIC WATER LINE TO DRINKING FOUNTAIN PER MANUFACTURES SPECIFICATIONS	2 EA
75	CONSTRUCT 2" PVC (SCH 80) WATER LINE, BEDDING PER GSWC STD. DWG. NO. P-3	155 LF
	PUBLIC SEWER CONSTRUCTION	
80	CONNECT TO EXISTING SEWER LINE WITH CUT-IN SADDLE	1 EA
81	CONSTRUCT 6" SEWER LATERAL PER SPPWC STD. PLAN 222-2, TYPE A, BEDDING PER DETAIL 6, SHEET C-0.02	30 LF
	PRIVATE SEWER CONSTRUCTION	
82	CONSTRUCT 4" PVC SEWER LATERAL (SDR 35), BEDDING PER DETAIL 6, SHEET C-0.02	140 LF
83	CONSTRUCT PRIVATE CLEANOUT PER DETAIL 8, SHEET C-0.02	5 EA
84	CONSTRUCT 6" PVC SEWER LINE (SDR 35), BEDDING PER DETAIL 6, SHEET C-0.02	60 LF
85	CONNECT PRIVATE SEWER LINE TO BLDG. SEWER LINE - SEE BUILDING PLUMBING PLANS	5 EA
86	CONNECT SEWER LINE TO DRINKING FOUNTAIN PER MANUFACTURES SPECIFICATIONS	2 EA
87	CONNECT TO EXISTING SEWER LINE WITH CUT-IN SADDLE	1 EA

NOTICE TO THE CONTRACTOR

THE ESTIMATES OF IMPROVEMENT AND GRADING QUANTITIES AS SHOWN HEREON ARE PROVIDED FOR SATISFYING PLAN CHECK INFORMATION REQUIREMENTS ONLY. THE CONTRACTOR SHALL PERFORM AN INDEPENDENT ESTIMATE OF ALL IMPROVEMENT QUANTITIES INCLUDING GRADING QUANTITIES, AND SHALL USE SAME AS A BASIS FOR HIS BID(S) AND CONTRACT(S).

GOLDEN STATE WATER COMPANY NEW SERVICE INSTALLATION NOTES:

1. METER BOX PLACEMENT SHALL BE PER GSWC STD. DWG. NO. P-28 AND/OR AS SHOWN ON PLANS. NO METERS SHALL BE INSTALLED BEYOND LIMITS OF PUBLIC RIGHT OF WAY WITHOUT EASEMENTS, UNLESS OTHERWISE INDICATED ON PLANS.
2. 12" MINIMUM SPACING BETWEEN SERVICE TAPS, EXCEPT ON ACP AND PVC MAINS WHERE 24" MINIMUM SPACING SHALL BE PROVIDED.
3. FOR HDPE SERVICE LINES, SNAKE THE SERVICE LINE IN THE TRENCH TO PROVIDE ENOUGH SLACK TO ALLOW AT LEAST ONE FOOT OF THERMAL CONTRACTION PER 100 FEET OF LENGTH. ATTACH TRACER WIRE TO HDPE SERVICE LINE.
4. NO JOINTS PERMITTED IN SERVICE LINES UNLESS AN ELBOW IS USED FOR THE 2" WATER SERVICE CONNECTION.
5. ALL NEW SERVICES SHALL BE INSTALLED USING SERVICE SADDLES.
6. FOR 5/8" x 3/4" METER, USE AN A24 ADAPTER.
7. FOR 3/4" x 3/4" METER, USE AN A34 ADAPTER.
8. FOR A 1" ANGLE METER VALVE, 1" COPPER PACK JOINT X %" METER NUT MAY BE UTILIZED WHEN SPECIFIED ON CONSTRUCTION PLANS.
9. SERVICES SHALL BE INSTALLED A MINIMUM OF 10 FEET FROM ALL SEWER LATERALS AND PROPOSED STREET TREE OR STREET LIGHT LOCATIONS.
10. IN AREAS WITH CORROSIVE SOILS USE HDPE SERVICE LINES WITH TRACER WIRE.
11. USE SILVER SOLDER (LEAD FREE) FOR ALL COPPER SERVICE WORK.
12. APPLICANT TO INSTALL BACKFLOW PREVENTION ASSEMBLY PER REQUIREMENTS OF GSWC'S CROSS-CONNECTION CONTROL POLICY ON ALL SERVICES AS CALLED FOR ON THE PLANS.
13. CURB MARKING WILL BE AS ALLOWED BY THE LOCAL GOVERNING AGENCY.

STANDARDS LEGEND

GSWC	GOLDEN STATE WATER COMPANY
SPPWC	STANDARD PLANS FOR PUBLIC WORKS CONSTRUCTION ("GREENBOOK")

DIGALERT
DIAL TOLL FREE 1-800-422-4133
AT LEAST TWO DAYS BEFORE YOU DIG
UNDERGROUND SERVICE ALERT OF SOUTHERN CALIFORNIA

BASIS OF BEARINGS:

BEARINGS SHOWN HEREON ARE BASED ON THE CENTERLINE OF 162 ND STREET (FORMERLY MARKET STREET) BEING N 89° 55' 30" E SHOWN ON TRACT NO. 10901, M.B. 254/31-32

BENCHMARK:

THE CITY OF GARDENA BENCHMARK NO. 5D-15 ELEV. = 43.508

CITY OF GARDENA — FREEWAY CITY — INCORPORATED 1930

CONSULTANT:
civTEC
999 CORPORATE DR.
SUITE 100
LADERA RANCH, CA 92694
p: 949.463.8822
e: tec@civtec.net

REGISTERED PROFESSIONAL ENGINEER — THOMAS E. CARCELLI — C-81640 — Exp. 09-30-23 — CIVIL — STATE OF CALIFORNIA — 9/26/2023

PREPARED UNDER THE SUPERVISION OF:
RJM DESIGN GROUP
31591 Camino Capistrano
San Juan Capistrano, CA 92675
www.RJMdesigngroup.com
[949] 493-2690 fax
[949] 493-2600 phone

LICENSED LANDSCAPE ARCHITECT — LARRY P. RYAN LICENSE NO. 2502 — Signature — 09/30/2025 Renewal Date — 9/26/2023 Date — STATE OF CALIFORNIA

REVISIONS

NO.	DESCRIPTION	DATE	APPROVED
1	90% CD SUBMITTAL	12/15/2022	
2	100% CD SUBMITTAL	05/01/2023	
3	FINAL SUBMITTAL	10/02/2023	

B.M.: THE CITY OF GARDENA BENCHMARK NO. 5D-15 ELEV. = 43.508'

	INITAL	DATE
DESIGNED BY	TEC	
DRAWN BY	STAFF	
CHECKED BY	TEC	

CITY OF GARDENA
DEPARTMENT OF PUBLIC WORKS - ENGINEERING

WATER / SEWER PLAN
COMMUNITY AQUATICS & SENIOR CENTER
C-2.01

APPROVED BY:
DATE — DIRECTOR OF PUBLIC WORKS

SHT. 11 OF 195 — DWG. NO. 5-2606

PLOT DATE: 9/26/2023

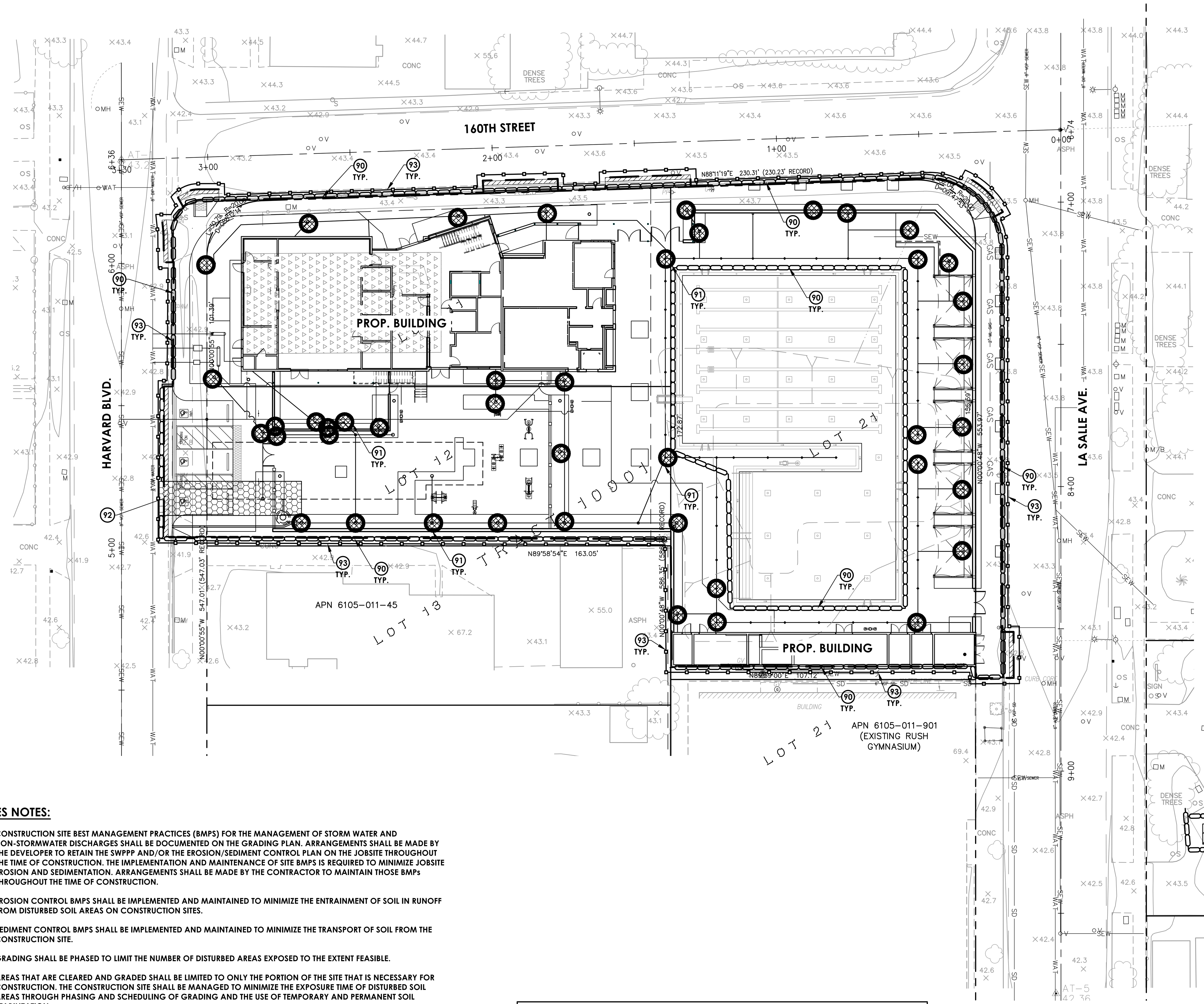

MATERIAL DELIVERY AND STORAGE AREA BMPS TO BE IMPLEMENTED: WM-1, WM-2, WM-4 (AREA MAY BE MODIFIED BY CONTRACTOR WITH CITY'S APPROVAL)

WASTE COLLECTION AREA BMPS TO BE IMPLEMENTED: WM-5, WM-6, WM-9 (WITH SECONDARY CONTAINMENT) (AREA MAY BE MODIFIED BY CONTRACTOR WITH CITY'S APPROVAL)

CONCRETE TRUCK WASHOUT AREA BMPS TO BE IMPLEMENTED: WM-8 (AREA MAY BE MODIFIED BY CONTRACTOR WITH CITY'S APPROVAL)

VEHICLE CLEANING, FUELING AND MAINTENANCE AREA BMPS TO BE IMPLEMENTED: WM-4, NS-8, NS-9, NS-10 (AREA MAY BE MODIFIED BY CONTRACTOR WITH CITY'S APPROVAL)

MS4 NPDES PERMIT
ORDER R4-2021-0105

TABLE 7. MINIMUM SET OF BMPS FOR ALL CONSTRUCTION SITES	
SITE MANAGEMENT	HOUSE KEEPING
EROSION CONTROLS	SCHEDULING
	PRESERVATION OF EXISTING VEGETATION
	WIND EROSION CONTROLS
SEDIMENT CONTROLS	PERIMETER CONTROLS (E.G. SILT FENCE, SANDBAG BARRIERS, ETC.)
	STABILIZED CONSTRUCTION SITE ENTRANCE/EXIT
NON-STORMWATER MANAGEMENT	WATER CONSERVATION PRACTICES
	DEWATERING OPERATIONS
WASTE MANAGEMENT	MATERIAL DELIVERY AND STORAGE
	STOCKPILE MANAGEMENT
	SPILL PREVENTION AND CONTROL
	SOLID WASTE MANAGEMENT
	CONCRETE WASTE MANAGEMENT
	SANITARY/SEPTIC WASTE MANAGEMENT

PROJECT DISTURBED AREA: 0.95± ACRES

EROSION CONSTRUCTION NOTES:

(90) INSTALL GRAVEL BAGS (SE-6)

(91) INSTALL FILTER FABRIC OVER CATCH BASIN (SE-10)

(92) INSTALL CONSTRUCTION ENTRANCE (TC-1)

(93) INSTALL SILT FENCE (SE-1) - CONFIRM LOCATION WITH CITY

LEGEND

GRAVEL BAGS (SE-8)

FILTER FABRIC OVER CATCH BASIN

SILT FENCE (SE-11)

LIMITS OF CONSRUCTION

EROSION AND SEDIMENT CONTROL GENERAL NOTES

1. ALL WORK SHALL BE IN ACCORDANCE WITH THE EROSION CONTROL PLANS, THE PROJECT'S BMPs, AND THE RECOMMENDATIONS OF SOILS REPORT.
2. EROSION CONTROL MEASURES SHALL BE IN PLACE AT THE END OF EACH WORKING DAY WHENEVER THE DAILY RAINFALL PROBABILITY EXCEEDS 40%.
3. EQUIPMENT AND WORKERS FOR EMERGENCY WORK SHALL BE MADE AVAILABLE AT ALL TIMES DURING THE RAINY SEASON. NECESSARY MATERIALS SHALL BE AVAILABLE ON SITE AND STOCKPILED AT CONVENIENT LOCATIONS TO FACILITATE RAPID CONSTRUCTION OF TEMPORARY EROSION CONTROL DEVICES AT ALL TIME.
4. CONTROLS SHALL BE SET UP AND MAINTAINED AS CONSTRUCTION PROCEEDS. ADJUSTMENTS TO THE EROSION CONTROL PLANS ARE ALLOWABLE AS REQUIRED AND APPROVED BY CITY.
5. ALL EROSION AND SEDIMENT CONTROL MEASURES SHALL IMPLEMENT STRUCTURAL AND NONSTRUCTURAL BEST MANAGEMENT PRACTICES (BMP) IN CONFORMANCE WITH THE GUIDELINES OF THE CALIFORNIA STORM WATER BMP HANDBOOKS.
6. AFTER A RAINSTORM, ALL SEDIMENT AND DEBRIS SHALL BE REMOVED FROM STREETS, CHECK BERMS AND DESILTING BASINS. ANY GRADED SLOPE SURFACE PROTECTION MEASURES DAMAGED DURING A RAINSTORM SHALL BE IMMEDIATELY REPAIRED. INSPECT CATCH BASINS FOR GRAVEL BAGS THAT MAY HAVE FALLEN IN AND BLOCKED DRAINAGE.
7. THE PERMITTEE AND CONTRACTOR SHALL BE RESPONSIBLE AND SHALL TAKE NECESSARY PRECAUTIONS TO PREVENT TRESPASS ONTO AREAS WHERE IMPOUNDED WATER CREATED A HAZARDOUS CONDITION.
8. AFTER CONSTRUCTION, INSPECT CATCH BASINS TO INSURE BMPs HAVE NOT FALLEN IN AND CLEAN OUT ANY CONSTRUCTION-RELATED DEBRIS.

GRAVEL BAGS

1. GENERAL: GRAVELBAG SHALL INCLUDE PROVIDING ALL LABOR, MATERIALS, AND EQUIPMENT TO FABRICATE AND INSTALL GRAVEL BAGS AS REQUIRED TO FACILITATE THE CONTROL OF EROSION.
2. LOCATION: GRAVEL BAGS SHALL BE PLACED PER PLAN, AND IN LOCATIONS SPECIFIED BY THE CITY, AND IN LOCATIONS DEEMED NECESSARY BY THE CONTRACTOR.
3. FABRICATION: GRAVEL BAGS SHALL BE FABRICATED USING FACTORY SEWN OR SEALED BAGS OF WOVEN POLYPROPYLENE, TREATED TO RESIST DEGRADATION BY ULTRAVIOLET LIGHT AND HAVING SUFFICIENT RESISTANCE TO TEARING TO ALLOW RELOCATION OF BAGS WITHIN SIX MONTHS OF INITIAL PLACEMENT WITH A LOSS OF NOT MORE THAN FIVE PERCENT OF THE BAGS.

   THE BAGS SHALL BE FILLED WITH SUBROUNDED TO ROUNDED GRAVEL LESS THAN 3/4-INCH IN DIAMETER, WITH LESS THAN FIVE PERCENT OF MATERIAL PASSING A NO. 30 SIEVE. THE FILLED BAGS SHALL HAVE THE OPEN ENDS SECURELY FASTENED PRIOR TO DELIVERY TO THE SITE.
4. INSTALLATION: GRAVEL BAGS SHALL BE INSTALLED IN A SIDE BY SIDE MANNER TO ENTRAP SILT AND MUD, AND TO DIVERT THE FLOW OF WATER. NOTWITHSTANDING THE OTHER REQUIREMENTS OF THIS SPECIFICATION, FAILURE OF THE BAGS TO PERFORM THIS FUNCTION SHALL BE REASON TO REJECT THEIR INSTALLATION.

   GRAVEL BAGS SHALL BE INSTALLED WITH THE WIDEST FACE AGAINST THE GROUND SURFACE OR THE UNDERLYING COURSE OF BAGS, AND PRESSED IN PLACE TO CONFORM TO THE UNDERLYING SURFACE. THE BAGS SHALL BE PLACED WITH THE TIED ENDS IN THE "UPHILL" OR "UPSTREAM" DIRECTION, BEGINNING AT THE LOWEST OR MOST DOWNSTREAM BAG, TIED ENDS WILL BE TUCKED UNDER BAG. SUBSEQUENT BAGS WITHIN ONE COURSE OF BAGS SHALL BE PLACED SO AS TO REST UPON THE TIED END OF THE PREVIOUSLY PLACED BAG, WITH NOT LESS THAN 10 PERCENT OF THE BAG IN CONTACT WITH THE PREVIOUS BAG, AND NOT MORE THAN 20 PERCENT IN CONTACT.

   SUBSEQUENT COURSES OF BAGS SHALL BE PLACED AS DESCRIBED PREVIOUSLY, WITH THE MID-POINT OF THE BAGS STRADDLING THE JOINTS OF BAGS IN THE UNDERLYING ROW.

   CONSTRUCTION OF A GRAVELBAG BERM PERPENDICULAR TO THE DIRECTION OF FLOW SHALL INCORPORATE BAGS PLACED IN A "PYRAMID" CONFIGURATION, WITH ALL INDIVIDUAL BAGS ORIENTED PERPENDICULAR TO THE DIRECTION OF FLOW. THE BERM SHALL BE CONSTRUCTED WITH A SPECIFIED NUMBER OF ROWS AT THE BOTTOM (IN CONTACT WITH THE GROUND), WITH SUCCESSIVELY FEWER ROWS IN EACH OVERLYING COURSE. THE UPSTREAM AND DOWNSTREAM FACES OF THE BERM SHALL BE NO STEEPER THAN 1 1/2 FEET HORIZONTAL TO 1 VERTICAL.

   DAMAGE WHICH COULD FORESEEBLY BE PREVENTED BY PROPER GRAVELBAG INSTALLATION SHALL BE THE CONTRACTOR'S RESPONSIBILITY.

STORMWATER MITIGATION MEASURES (BMPs)

THE FOLLOWING BMP'S AS OUTLINED IN, BUT NOT LIMITED TO, THE BEST MANAGEMENT PRACTICE HANDBOOK. CALIFORNIA STORMWATER QUALITY TASK FORCE. SACRAMENTO. CALIFORNIA 2019, OR THE LATEST REVISED EDITION, APPLY DURING THE CONSTRUCTION OF THIS PROJECT. (ADDITIONAL MEASURES MAY BE REQUIRED IF DEEMED APPROPRIATE BY CITY INSPECTORS)

NS-1 WATER CONSERVATION PRACTICES *
NS-2 DEWATERING OPERATIONS *
NS-3 PAVING OPERATIONS *
NS-7 POTABLE WATER/IRRIGATION *
WM-1 MATERIAL DELIVERY AND STORAGE *
WM-2 MATERIAL USE *
WM-3 STOCKPILE MANAGEMENT *
WM-4 SPILL PREVENTION AND CONTROL *
WM-5 SOLID WASTE MANAGEMENT *
WM-6 HAZARDOUS WASTE MANAGEMENT *
WM-7 CONTAMINATED SOIL MANAGEMENT *
WM-8 CONCRETE WASTE MANAGEMENT *
WM-9 SANITARY-SEPTIC WASTE MANAGEMENT *
NS-8 VEHICLE AND EQUIPMENT CLEANING *
NS-9 VEHICLE AND EQUIPMENT FUELING *
NS-10 VEHICLE AND EQUIPMENT MAINTENANCE *
NS-12 CONCRETE CURING
NS-13 CONCRETE FINISHING

WE-1 WIND EROSION CONTROL
TC-1 STABILIZED CONSTRUCTION ENTRANCE *
TC-3 ENTRANCE OUTLET TIRE WASH *
SE-1 SILT FENCE
SE-4 CHECK DAMS
SE-5 FIBER ROLLS
SE-6 GRAVEL BAG BERM
SE-7 STREET SWEEPING AND VACUUMING
SE-9 STRAW BALE BARRIERS
SE-10 STORM DRAIN INLET PROTECTION
EC-1 SCHEDULING
EC-2 PRESERVATION OF EXISTING VEGETATION
EC-5 SOIL BINDERS

NOTE:
* LOCATIONS TO BE DETERMINED BY CONTRACTOR AND APPROVED BY CITY INSPECTOR

NPDES NOTES:

1. CONSTRUCTION SITE BEST MANAGEMENT PRACTICES (BMPS) FOR THE MANAGEMENT OF STORM WATER AND NON-STORMWATER DISCHARGES SHALL BE DOCUMENTED ON THE GRADING PLAN. ARRANGEMENTS SHALL BE MADE BY THE DEVELOPER TO RETAIN THE SWPPP AND/OR THE EROSION/SEDIMENT CONTROL PLAN ON THE JOBSITE THROUGHOUT THE TIME OF CONSTRUCTION. THE IMPLEMENTATION AND MAINTENANCE OF SITE BMPS IS REQUIRED TO MINIMIZE JOBSITE EROSION AND SEDIMENTATION. ARRANGEMENTS SHALL BE MADE BY THE CONTRACTOR TO MAINTAIN THOSE BMPs THROUGHOUT THE TIME OF CONSTRUCTION.
2. EROSION CONTROL BMPS SHALL BE IMPLEMENTED AND MAINTAINED TO MINIMIZE THE ENTRAINMENT OF SOIL IN RUNOFF FROM DISTURBED SOIL AREAS ON CONSTRUCTION SITES.
3. SEDIMENT CONTROL BMPS SHALL BE IMPLEMENTED AND MAINTAINED TO MINIMIZE THE TRANSPORT OF SOIL FROM THE CONSTRUCTION SITE.
4. GRADING SHALL BE PHASED TO LIMIT THE NUMBER OF DISTURBED AREAS EXPOSED TO THE EXTENT FEASIBLE.
5. AREAS THAT ARE CLEARED AND GRADED SHALL BE LIMITED TO ONLY THE PORTION OF THE SITE THAT IS NECESSARY FOR CONSTRUCTION. THE CONSTRUCTION SITE SHALL BE MANAGED TO MINIMIZE THE EXPOSURE TIME OF DISTURBED SOIL AREAS THROUGH PHASING AND SCHEDULING OF GRADING AND THE USE OF TEMPORARY AND PERMANENT SOIL STABILIZATION.
6. ONCE DISTURBED, SLOPES (TEMPORARY OR PERMANENT) SHALL BE STABILIZED IF THEY WILL NOT BE WORKED WITHIN 14 DAYS. ALL SLOPES SHALL BE STABILIZED PRIOR TO A PREDICTED STORM EVENT. CONSTRUCTION SITES SHALL BE REVEGETATED AS EARLY AS FEASIBLE AFTER SOIL DISTURBANCE.
7. STOCKPILES OF SOIL SHALL BE PROPERLY CONTAINED TO ELIMINATE OR REDUCE SEDIMENT TRANSPORT FROM THE SITE TO STREETS, DRAINAGE FACILITIES OR ADJACENT PROPERTIES VIA RUNOFF, VEHICLE TRACKING, OR WIND.
8. CONSTRUCTION SITES SHALL BE MAINTAINED IN SUCH A CONDITION THAT A STORM DOES NOT CARRY WASTES OR POLLUTANTS OFF THE SITE. DISCHARGES OTHER THAN STORMWATER (NON-STORMWATER DISCHARGES) ARE PROHIBITED, EXCEPT AS AUTHORIZED BY AN INDIVIDUAL NPDES PERMIT, THE STATEWIDE GENERAL PERMIT-CONSTRUCTION ACTIVITY. POTENTIAL POLLUTANTS INCLUDE BUT ARE NOT LIMITED TO: SOLID OR LIQUID CHEMICAL SPILLS; WASTES FROM PAINTS, STAINS, SEALANTS, SOLVENTS, DETERGENTS, GLUES, LIME, PESTICIDES, HERBICIDES, FERTILIZERS, WOOD PRESERVATIVES, AND ASBESTOS FIBERS, PAINT FLAKES OR STUCCO FRAGMENTS; FUELS, OILS LUBRICANTS, AND HYDRAULIC, RADIATOR OR BATTERY FLUIDS; CONCRETE AND RELATED CUTTING OR CURING RESIDUES; FLOATABLE WASTES; WASTES FROM ENGINE/EQUIPMENT STEAM CLEANING OR CHEMICAL DEGREASING; WASTES FROM STREET CLEANING; AND SUPER-CHLORINATED POTABLE WATER FROM LINE FLUSHING AND TESTING. DURING CONSTRUCTION, DISPOSAL OF SUCH MATERIALS SHOULD OCCUR IN A SPECIFIED AND CONTROLLED TEMPORARY AREA ON-SITE PHYSICALLY SEPARATED FROM POTENTIAL STORMWATER RUNOFF, WITH ULTIMATE DISPOSAL IN ACCORDANCE WITH LOCAL, STATE AND FEDERAL REQUIREMENTS.
9. RUNOFF FROM EQUIPMENT AND VEHICLE WASHING SHALL BE CONTAINED AT THE CONSTRUCTION SITE AND MUST NOT BE DISCHARGED TO RECEIVING WATERS OR THE LOCAL STORM DRAIN SYSTEM.
10. APPROPRIATE BMPS FOR CONSTRUCTION-RELATED MATERIALS, WASTES, SPILLS OR RESIDUES SHALL BE IMPLEMENTED TO ELIMINATE OR REDUCE TRANSPORT FROM THE SITE TO STREETS, DRAINAGE FACILITIES, OR ADJOINING PROPERTIES BY WIND OR RUNOFF.
11. ALL CONSTRUCTION CONTRACTORS AND SUBCONTRACTOR PERSONNEL ARE TO BE MADE AWARE OF THE REQUIRED BMPS AND GOOD HOUSEKEEPING MEASURES FOR THE PROJECT SITE AND ANY ASSOCIATED CONSTRUCTION STAGING AREAS.
12. DISCHARGING CONTAMINATED GROUNDWATER PRODUCED BY DEWATERING GROUNDWATER THAT HAS INFILTRATED INTO THE CONSTRUCTION SITE IS PROHIBITED. DISCHARGING OF CONTAMINATED SOILS VIA SURFACE EROSION IS ALSO PROHIBITED. DISCHARGING NON-CONTAMINATED GROUNDWATER PRODUCED BY DEWATERING ACTIVITIES MAY REQUIRE A NATIONAL POLLUTANT DISCHARGE ELIMINATION SYSTEM (NPDES) PERMIT FROM THE REGIONAL WATER QUALITY CONTROL BOARD.
13. BMPS SHALL BE MAINTAINED AT ALL TIMES. IN ADDITION, BMPS SHALL BE INSPECTED PRIOR TO PREDICTED STORM EVENTS AND FOLLOWING STORM EVENTS.
14. AT THE END OF EACH DAY OF CONSTRUCTION ACTIVITY, ALL CONSTRUCTION DEBRIS AND WASTE MATERIALS SHALL BE COLLECTED AND PROPERLY DISPOSED OF IN TRASH OR RECYCLE BINS.

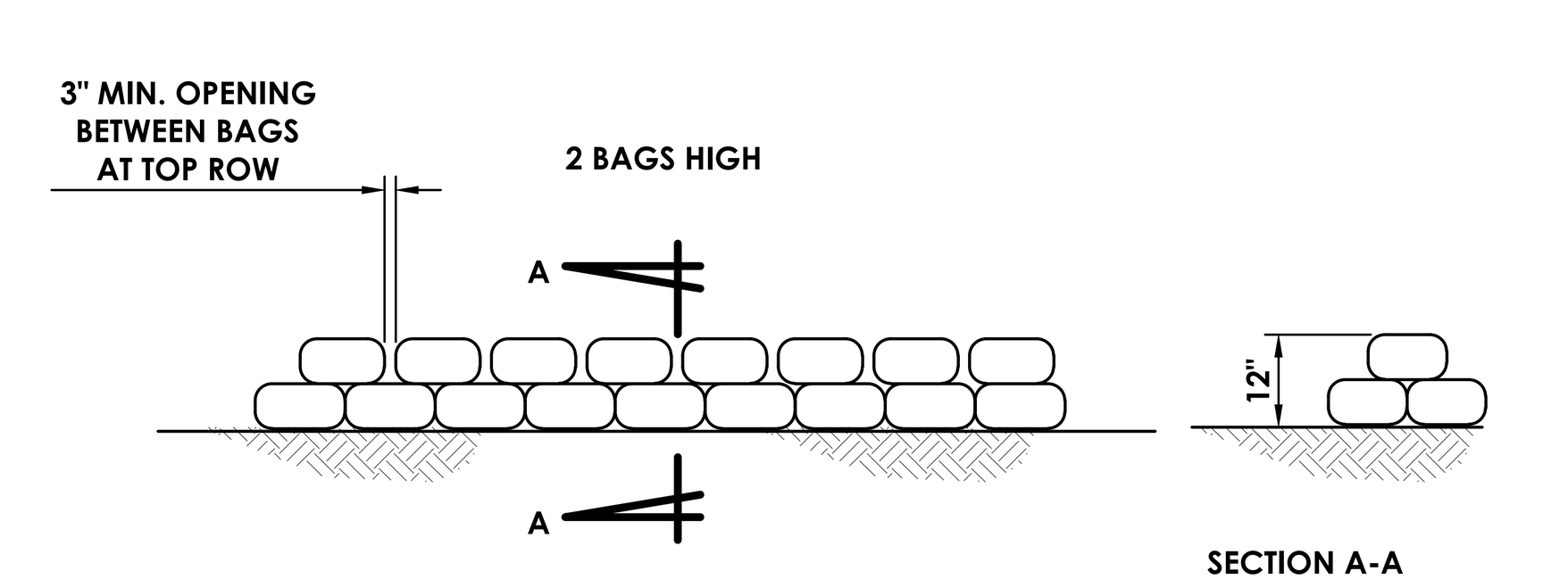

SE-8 GRAVEL BAG DETAILS — SCALE: N.T.S.

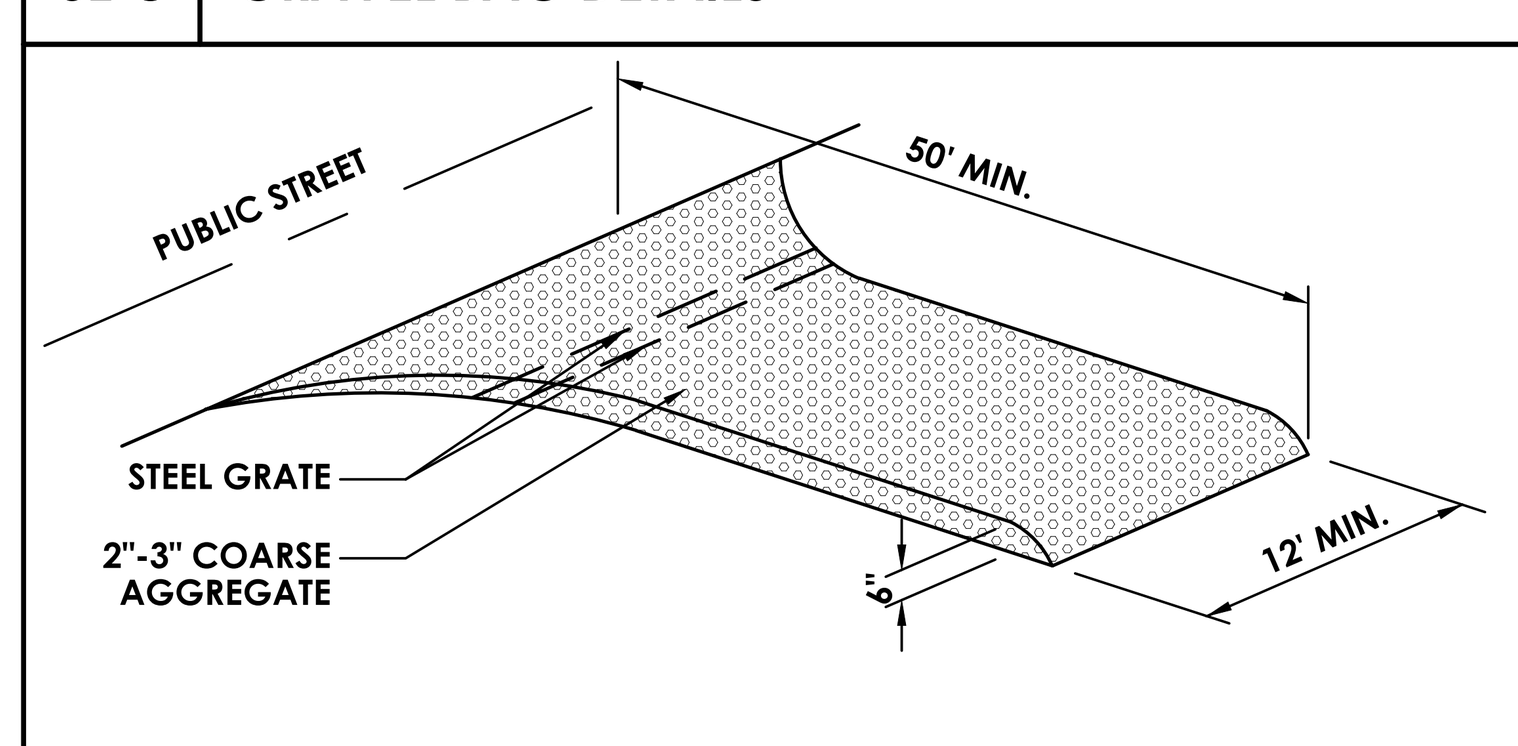

NOTE:
PLACE 4" PVC DRAIN PIPE IN EXISTING GUTTER FLOWLINE WITH A.C. RAMP AT DRIVEWAYS IF STREET CURB & GUTTER DRAINAGE FLOW IS BLOCKED.

NOTE:
A RUMBLE RACK IS REQUIRED AT BOTH ENTRANCES TO THE SITE UNTIL THE ASPHALT HAS BEEN INSTALLED.

NOTE:
CONTRACTOR SHALL REPAIR ALL DAMAGED CURB & GUTTER IN PUBLIC RIGHT-OF-WAY TO THE SATISFACTION OF THE CITY PRIOR TO PROJECT CLOSE-OUT.

TC-1 STABILIZED CONSTRUCTION ENTRANCE — SCALE: N.T.S.

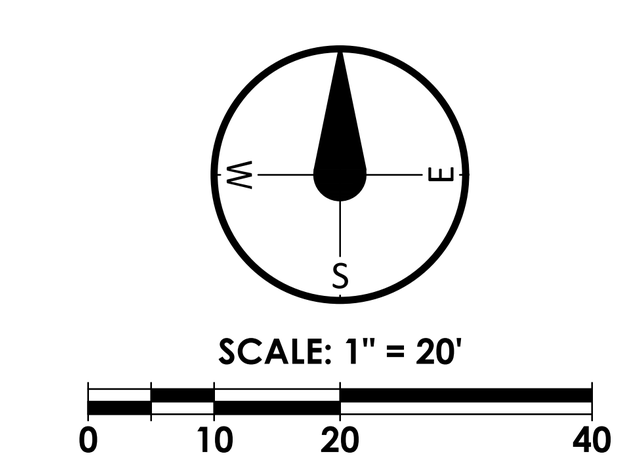

Silt Fence **SE-1**

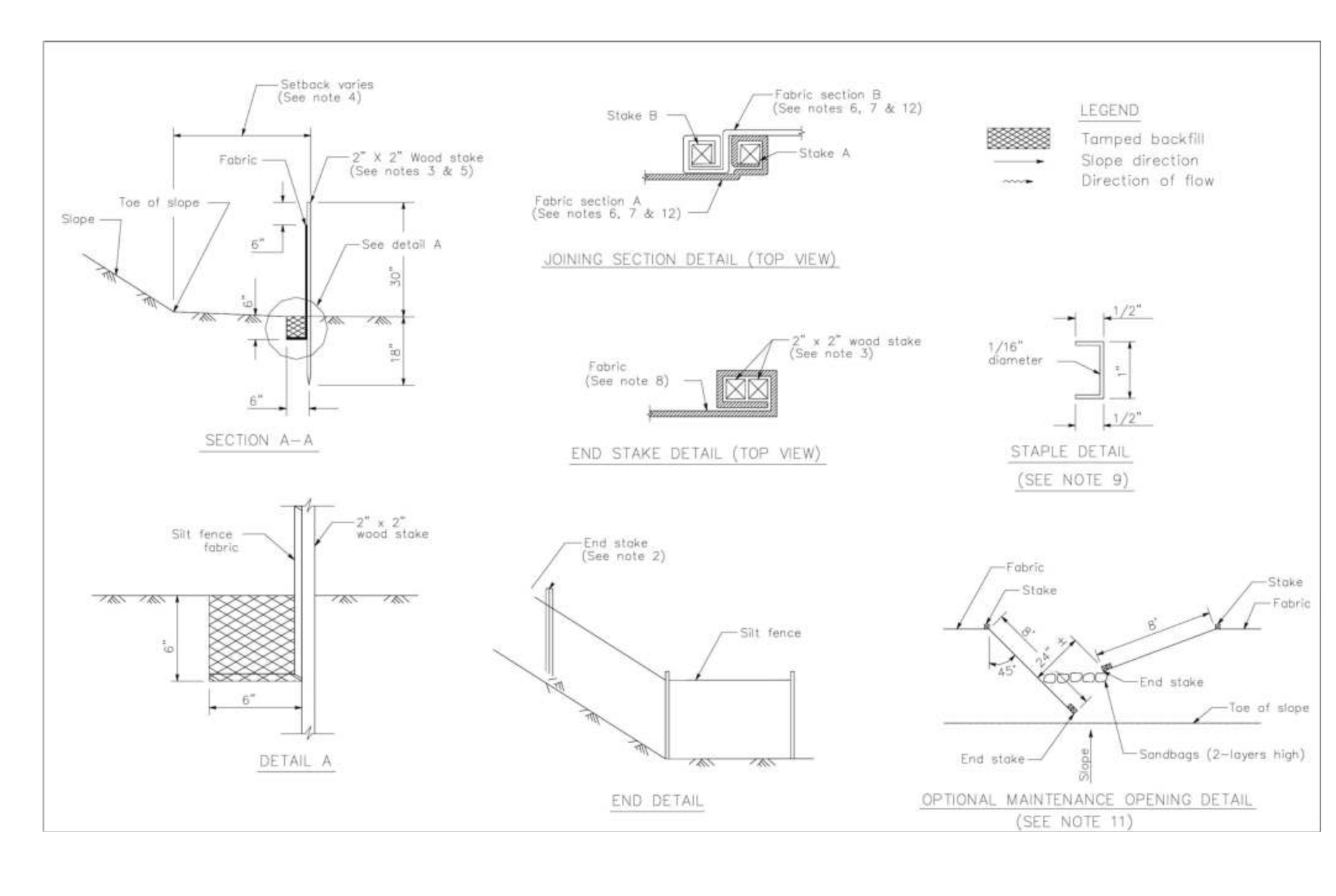

December 2019 — CASQA BMP Handbook Construction www.casqa.org — 9 of 10

NOTE TO CONTRACTOR:

THE 24-HOUR CELL PHONE NUMBER OF THE LEGALLY RESPONSIBLE PERSON (LRP) WILL BE PROVIDED BY THE AWARDED CONTRACTOR.

RESPONSIBLE PERSON ____________________

24 HOUR TELEPHONE NO. ____________________

DIGALERT
DIAL TOLL FREE
1-800-422-4133
AT LEAST TWO DAYS
BEFORE YOU DIG
UNDERGROUND SERVICE ALERT OF SOUTHERN CALIFORNIA

BASIS OF BEARINGS:

BEARINGS SHOWN HEREON ARE BASED ON THE CENTERLINE OF 162 ND STREET (FORMERLY MARKET STREET) BEING N 89° 55' 30" E SHOWN ON TRACT NO. 10901, M.B. 254/31-32

BENCHMARK:

THE CITY OF GARDENA BENCHMARK NO. 5D-15 ELEV. = 43.508

CITY OF GARDENA — INCORPORATED 1930 — FREEWAY CITY

CONSULTANT:
civTEC
999 CORPORATE DR.
SUITE 100
LADERA RANCH, CA 92694
p: 949.463.8822
e: tec@civtec.net

REGISTERED PROFESSIONAL ENGINEER — THOMAS E. CARCELLI — C-81640 — Exp. 09-30-23 — CIVIL — STATE OF CALIFORNIA
9/26/2023

PREPARED UNDER THE SUPERVISION OF:
RJM DESIGN GROUP
31591 Camino Capistrano
San Juan Capistrano, CA 92675
www.RJMdesigngroup.com
[949] 493-2690 fax
[949] 493-2600 phone

LICENSED LANDSCAPE ARCHITECT — LARRY P. RYAN — LICENSE NO. 2502 — Signature — 09/30/2025 Renewal Date — 9/26/2023 Date — STATE OF CALIFORNIA

REVISIONS			
NO.	DESCRIPTION	DATE	APPROVED
1	90% CD SUBMITTAL	12/15/2022	
2	100% CD SUBMITTAL	05/01/2023	
3	FINAL SUBMITTAL	10/02/2023	

B.M.: THE CITY OF GARDENA BENCHMARK NO. 5D-15 ELEV. = 43.508'

CITY OF GARDENA
DEPARTMENT OF PUBLIC WORKS - ENGINEERING

EROSION CONTROL PLAN
COMMUNITY AQUATICS & SENIOR CENTER
C-3.01

	INITAL	DATE
DESIGNED BY	TEC	
DRAWN BY	STAFF	
CHECKED BY	TEC	

APPROVED BY:

DATE — DIRECTOR OF PUBLIC WORKS

SHT. 12 OF 195 — DWG. NO. 5-2606

PLOT DATE: 9/26/2023

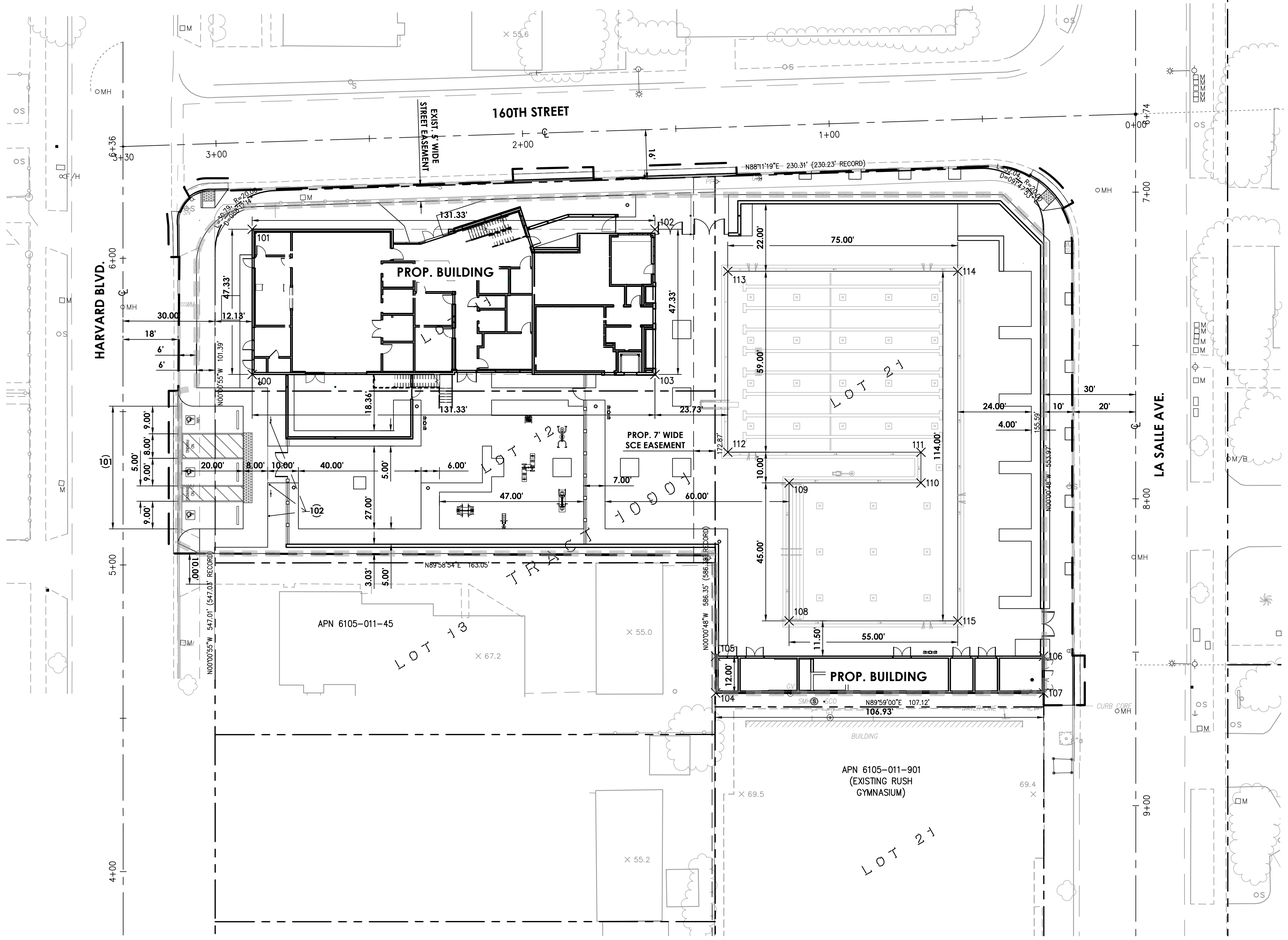

POINT TABLE			
	POINT #	NORTHING	EASTING
CONTROL PT.	7	5001.02	10780.41
CONTROL PT.	9	5000.00	10000.00
	100	5562.12	10041.97
	101	5609.46	10041.97
	102	5609.46	10173.30
	103	5562.12	10173.30
	104	5458.26	10193.10
	105	5470.26	10193.10
	106	5470.26	10300.04
	107	5458.26	10300.04
	108	5481.76	10217.04
	109	5526.76	10217.04
	110	5526.76	10260.04
	111	5536.76	10260.04
	112	5536.76	10197.04
	113	5595.76	10197.04
	114	5595.76	10272.04
	115	5481.76	10272.04

ENGINEER OF RECORD STATEMENT

ALL EASEMENTS HAVE BEEN SHOWN AS PER PROVIDED PRELIMINARY TITLE REPORTS BY FIDELITY NATIONAL TITLE CO. (ORDER NO. 987-30076643-1RV, DATED OCT. 28, 2021), LAWYERS TITLE (FILE NO. 218254769, DATED SEPT. 7, 2018), AND FIDELITY NATIONAL TITLE CO. (ORDER NO. 989-30033538-D-DL), DATED FEB. 9, 2021).

THOMAS E. CARCELLI, P.E. — 10/2/2023 DATE

SURVEYOR:

TED KRULL, PLS 5848
STARLIGHT SURVEYING, INC.
17955 SKY PARK CIR. STE F
IRVINE, CA. 92614
(949) 757-0613
DATES OF SURVEY: NOV. 2021 AND JAN. 2022

GENERAL NOTES

1. CONTRACTOR SHALL REFERENCE ARCHITECTURAL AND/OR LANDSCAPE PLANS FOR ADDITIONAL HARDSCAPE REQUIREMENTS AND DETAILS.
2. CONTRACTOR SHALL REMOVE AND DISPOSE OF EXISTING LANDSCAPE AND HARDSCAPE IMPROVEMENTS AS NECESSARY TO CONSTRUCT IMPROVEMENTS SHOWN HEREON.
3. ALL SIDEWALKS, CURB RETURNS, AND ACCESS POINTS SHALL MEET TITLE 24 AND AMERICANS WITH DISABILITIES ACT (ADA) REQUIREMENTS.

NOTE TO CONTRACTOR:

A. CONTRACTOR SHALL BE SOLELY RESPONSIBLE FOR PROVIDING COMPLETE, TIMELY AND ACCURATE FIELD LAYOUT OF THE PROPOSED SITE IMPROVEMENTS INCLUDING, BUT NOT NECESSARILY LIMITED TO, HORIZONTAL AND VERTICAL CONTROL AND DIMENSIONAL COORDINATION AS NECESSARY TO CONSTRUCT THE WORK IN ACCORDANCE WITH THE CONTRACT DOCUMENTS. THIS SURVEY WORK SHALL BE PERFORMED BY A LICENSED LAND SURVEYOR AND SHALL PROVIDE FOR THE SURVEY AND STAGING OF ALL CONSTRUCTION ELEMENTS INCLUDING BUT NOT LIMITED TO BUILDING LOCATIONS, PAVING EDGES/ALIGNMENT FENCING, WALLS, LIGHT FIXTURES, SIGNS, MOW CURBS, SEATING, SHADE STRUCTURES AND APPURTENANCES, CURB AND GUTTER ALIGNMENTS, CATCH BASINS, DRAINS, ETC.

B. AN AUTOCAD-COMPATIBLE .DWG FILE OF THE PROPOSED IMPROVEMENTS SHALL BE PROVIDED TO THE CONTRACTOR PRIOR TO THE START OF CONSTRUCTION FOR HIS USE IN PREPARING THE NECESSARY FIELD SURVEYING / LAYOUT OF PROPOSED IMPROVEMENTS. THE USE OF THIS DIGITAL FILE SHALL BE THE SOLE RESPONSIBILITY OF THE CONTRACTOR AND IS INTENDED TO ASSIST THE SURVEYOR IN THE LAYOUT OF THE PROPOSED IMPROVEMENTS.

THESE ELECTRONIC FILES ARE NOT CONSTRUCTION DOCUMENTS. DIFFERENCES MAY EXIST BETWEEN THESE ELECTRONIC FILES AND CORRESPONDING HARD COPY CONSTRUCTION DOCUMENTS ISSUED FOR PUBLIC BID. IN THE EVENT THAT A CONFLICT ARISES BETWEEN THE SIGNED OR SEALED HARD COPY CONSTRUCTION DOCUMENTS AND THE ELECTRONIC FILES, THE SIGNED OR SEALED HARD COPY CONSTRUCTION DOCUMENTS SHALL GOVERN. THE CONTRACTOR IS RESPONSIBLE FOR DETERMINING IF ANY CONFLICT EXISTS AND SHALL BRING ANY DISCREPANCIES TO THE PROJECT LANDSCAPE ARCHITECT'S ATTENTION PRIOR TO ANY FIELD LAYOUT. BY THE CONTRACTOR'S USE OF THESE ELECTRONIC FILES, THEY ARE NOT RELIEVED OF THEIR DUTY TO FULLY COMPLY WITH THE CONTRACT DOCUMENTS, INCLUDING, AND WITHOUT LIMITATION, THE NEED TO CHECK, CONFIRM, AND COORDINATE ALL DIMENSIONS AND DETAILS, TAKE FIELD MEASUREMENTS, VERIFY FIELD CONDITIONS, AND COORDINATE THE WORK WITH THAT OF OTHER CONTRACTORS FOR THE PROJECT.

THE DIGITAL INFORMATION PROVIDED BY civTEC SHALL NOT BE USED FOR ANY PURPOSE OTHER THAN FOR THE PROJECT DESCRIBED ABOVE AND SHALL NOT BE RELEASED TO ANY OTHER PARTY WITHOUT THE WRITTEN CONSENT OF civTEC. THE INFORMATION CONTAINED ON THE ELECTRONIC MEDIA IS AN INSTRUMENT OF PROFESSIONAL SERVICES AND SHALL REMAIN THE PROPERTY OF civTEC.

NOTE RE: FRANCHISE UNDERGROUND LINES:

FRANCHISE CONDUITS ARE LOCATED BENEATH THE PROPOSED UTILITY LINES CROSSING EAST AND WEST, WITH A MINIMUM CLARENCE OF ONE (1) FOOT BELOW THE PROPOSED LINES.

LEGEND

- LIMITS OF CONSRUCTION
- LIMITS OF GRADING

BASIS OF BEARINGS

BEARINGS SHOWN HEREON ARE BASED ON THE CENTERLINE OF 162 ND STREET (FORMERLY MARKET STREET) BEING N 89° 55' 30" E SHOWN ON TRACT NO. 10901, M.B. 254/31-32, OFFICIAL RECORDS.

BENCHMARK

THE CITY OF GARDENA BENCHMARK NO. 5D-15
ELEV. = 43.508'

SCALE: 1" = 20'
0 10 20 40

SIGNING/STRIPING CONSTRUCTION NOTES & ESTIMATED QUANTITIES

NO.	DESCRIPTION	QUANTITY
101	CONSTRUCT ACCESSIBLE PARKING STRIPING & WHEEL STOPS PER DETAILS 9 AND 10, SHEET C-0.02	LS
102	INSTALL ACCESSIBLE SIGNAGE PER DETAIL LANDSCAPE ARCHITECT'S PLANS	LS

NOTICE TO THE CONTRACTOR

THE ESTIMATES OF IMPROVEMENT AND GRADING QUANTITIES AS SHOWN HEREON ARE PROVIDED FOR SATISFYING PLAN CHECK INFORMATION REQUIREMENTS ONLY. THE CONTRACTOR SHALL PERFORM AN INDEPENDENT ESTIMATE OF ALL IMPROVEMENT QUANTITIES INCLUDING GRADING QUANTITIES, AND SHALL USE SAME AS A BASIS FOR HIS BID(S) AND CONTRACT(S).

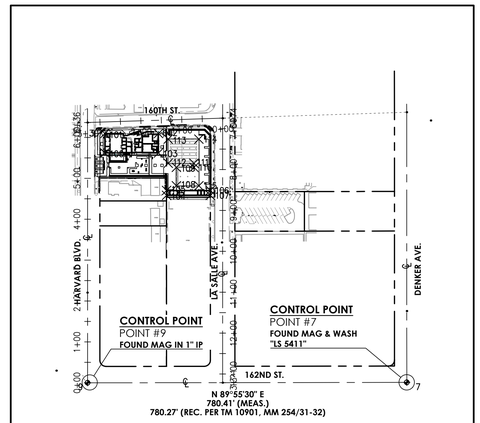

CONTROL MAP
SCALE: 1" = 150'

DIGALERT
DIAL TOLL FREE
1-800-422-4133
AT LEAST TWO DAYS BEFORE YOU DIG
UNDERGROUND SERVICE ALERT OF SOUTHERN CALIFORNIA

BASIS OF BEARINGS:
BEARINGS SHOWN HEREON ARE BASED ON THE CENTERLINE OF 162 ND STREET (FORMERLY MARKET STREET) BEING N 89° 55' 30" E SHOWN ON TRACT NO. 10901, M.B. 254/31-32

BENCHMARK:
THE CITY OF GARDENA BENCHMARK NO. 5D-15 ELEV. = 43.508

CONSULTANT:
civTEC
999 CORPORATE DR.
SUITE 100
LADERA RANCH, CA 92694
p: 949.463.8822
e: tec@civtec.net

REGISTERED PROFESSIONAL ENGINEER — THOMAS E. CARCELLI — C-81640 Exp. 09-30-23 — CIVIL — STATE OF CALIFORNIA
9/26/2023

PREPARED UNDER THE SUPERVISION OF:
RJM DESIGN GROUP
31591 Camino Capistrano
San Juan Capistrano, CA 92675
www.RJMdesigngroup.com
[949] 493-2690 fax
[949] 493-2600 phone

REGISTERED LANDSCAPE ARCHITECT — STATE OF CALIFORNIA

REVISIONS			
NO.	DESCRIPTION	DATE	APPROVED
1	90% CD SUBMITTAL	12/15/2022	
2	100% CD SUBMITTAL	05/01/2023	
3	FINAL SUBMITTAL	10/02/2023	

B.M.: THE CITY OF GARDENA BENCHMARK NO. 5D-15 ELEV. = 43.508'

	INITAL	DATE
DESIGNED BY	TEC	
DRAWN BY	STAFF	
CHECKED BY	TEC	

CITY OF GARDENA
DEPARTMENT OF PUBLIC WORKS - ENGINEERING
HORIZONTAL CONTROL/STRIPING PLAN
COMMUNITY AQUATICS & SENIOR CENTER
C-4.01

APPROVED BY:
DATE — DIRECTOR OF PUBLIC WORKS

SHT. 13 OF 195 DWG. NO. 5-2606

PLOT DATE: 9/26/2023

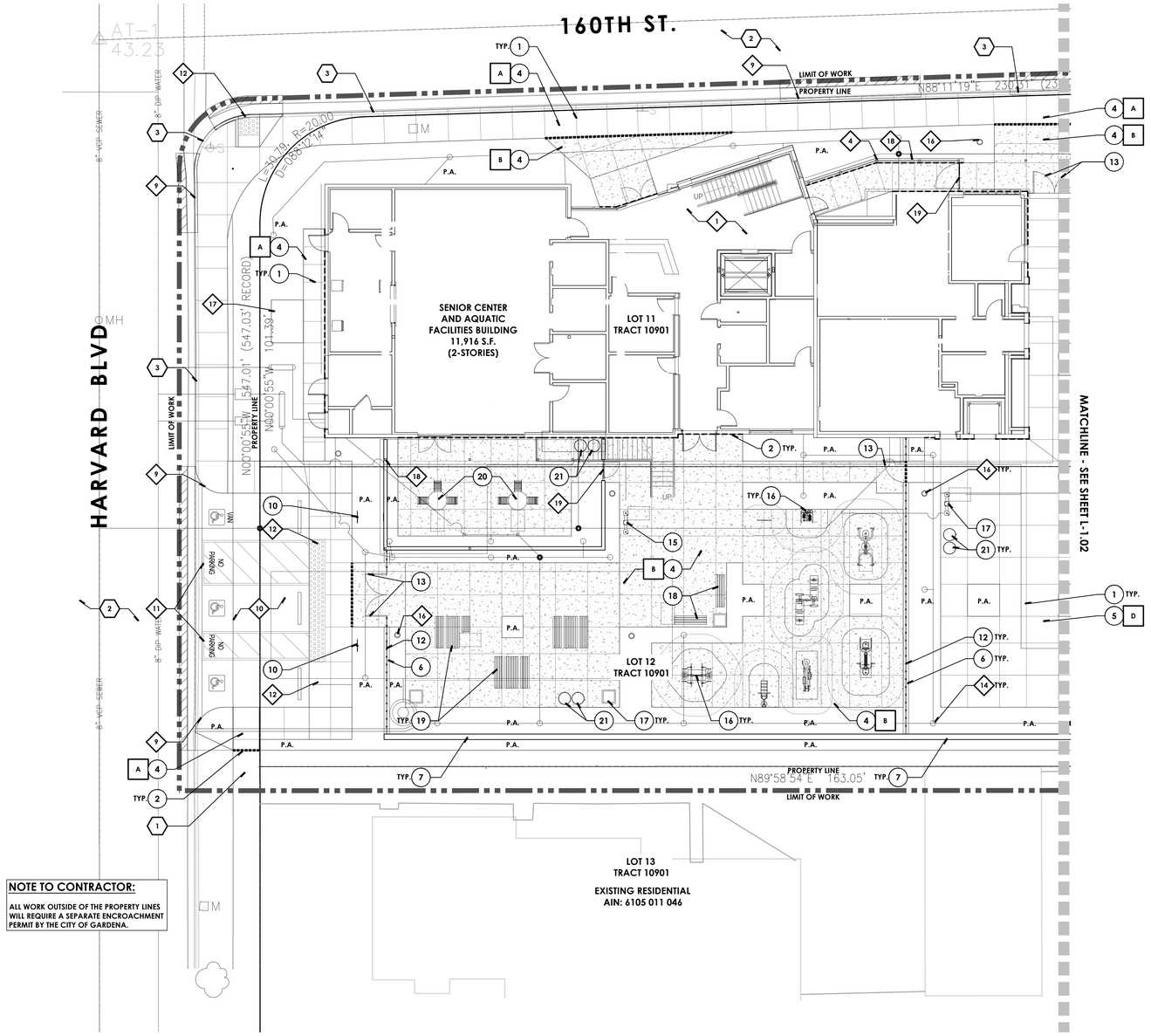

NOTE TO CONTRACTOR:

ALL WORK OUTSIDE OF THE PROPERTY LINES WILL REQUIRE A SEPARATE ENCROACHMENT PERMIT BY THE CITY OF GARDENA.

CONSTRUCTION LEGEND:

	CONSTRUCT:	DETAIL REFERENCE:
1	SAWCUT CONTROL JOINT	DETAIL: 3 SHEET: L-2.01
2	COLD JOINT	DETAIL: 3 SHEET: L-2.01
3	EXPANSION JOINT	DETAIL: 3 SHEET: L-2.01
4	4.5" STANDARD PEDESTRIAN CONCRETE PAVING	DETAIL: 1 SHEET: L-2.01
5	6" PEDESTRIAN CONCRETE PAVING AT POOL DECKING	DETAIL: 2 SHEET: L-2.01
6	12" CONCRETE MOWCURB	DETAIL: 4 SHEET: L-2.01
7	8' HT. CONCRETE MASONRY BLOCK PERIMETER WALL	DETAIL: 6 SHEET: L-2.01
8	8' HT. CONCRETE MASONRY BLOCK PERIMETER WALL AT SHADE STRUCTURES	DETAIL: 1 SHEET: L-2.02
9	20" HT. POURED-IN-PLACE CONCRETE LOW WALL	DETAIL: 2 SHEET: L-2.02
10	ADA ACCESSIBLE PARKING SIGNAGE	DETAIL: 5 SHEET: L-2.01
11	6" VEHICULAR CONCRETE PAVING	DETAIL: 1 SHEET: L-2.01
12	8' HT. TUBULAR STEEL FENCING	DETAIL: 2 SHEET: L-2.03
13	8' HT. TUBULAR STEEL PEDESTRIAN GATES	DETAIL: 1 SHEET: L-2.03
14	MAINTENANCE ACCESS GATES	DETAIL: 3 SHEET: L-2.03
15	ADA PEDESTAL DRINKING FOUNTAIN WITH BOTTLE FILLER	DETAIL: 1 SHEET: L-2.04
16	OUTDOOR FITNESS EQUIPMENT	DETAIL: 1 SHEET: L-2.06
17	30" SQ. PRECAST CONCRETE PLANTERS	DETAIL: 3 SHEET: L-2.05
18	BENCH SEATING	DETAIL: 1 SHEET: L-2.05
19	6' PICNIC TABLE	DETAIL: 2 SHEET: L-2.05
20	42" ROUND TABLE WITH SEATS	DETAIL: 4 SHEET: L-2.05
21	WASTE / RECYCLING RECEPTACLES	DETAIL: 5 SHEET: L-2.05

WORK BY OTHER DISCIPLINES:

	DESCRIPTION:	COMMENTS:
1	SENIOR CENTER / AQUATICS CENTER BUILDING	PER SVA PLANS
2	POOL EQUIPMENT / STORAGE BUILDING	PER SVA PLANS
3	CONCRETE BUILDING FOUNDATION	PER SVA PLANS
4	BUILDING TRELLIS / SHADE STRUCTURE	PER SVA PLANS
5	TRASH ENCLOSURE	PER SVA PLANS
6	SWIMMING POOL	PER JONES & MADHAVAN PLANS
7	DIVING BOARD	PER JONES & MADHAVAN PLANS
8	ADA COMPLIANT POOL LIFT	PER JONES & MADHAVAN PLANS
9	CONCRETE CURB AND GUTTER	PER CIVTEC PLANS
10	PARKING LOT A.C. PAVING	PER CIVTEC PLANS
11	ADA PARKING STALL STRIPING AND WHEEL STOPS	PER CIVTEC PLANS
12	ADA ACCESSIBLE RAMP W/ TRUNCATED DOMES	PER CIVTEC PLANS
13	POOL DECK DRAINS	PER CIVTEC PLANS
14	LANDSCAPE AREA DRAINS	PER CIVTEC PLANS
15	ROLLED CONCRETE CURB	PER CIVTEC PLANS
16	PEDESTRIAN LIGHTING	PER FBA ENGINEERING ELECTRICAL PLANS
17	ELECTRICAL TRANSFORMER	PER FBA ENGINEERING ELECTRICAL PLANS
18	CMU WALL WITH TRELLIS POST	PER SVA PLANS
19	PEDESTRIAN GATE	PER SVA PLANS

EXISTING CONDITIONS:

	DESCRIPTION:	COMMENTS:
1	EXISTING CONCRETE PAVING	PROTECT-IN-PLACE PER CIVIL PLANS
2	EXISTING ASPHALT PAVING	PROTECT-IN-PLACE PER CIVIL PLANS
3	EXISTING CONCRETE CURB AND GUTTER	PROTECT-IN-PLACE PER CIVIL PLANS
4	EXISTING UTILITY	PROTECT-IN-PLACE PER CIVIL PLANS
5	EXISTING SCE UNDERGROUND UTILITY EASEMENT	SEE UTILITY PLANS

SHADE STRUCTURE LEGEND

	DESCRIPTION:	COMMENTS:
S1	ONE (1) 65'x16' JOINED FULL HIP CANTILEVER SHADE STRUCTURE BY USA SHADE	SEE DETAIL 1, SHEET L-2.10
S2	FIVE (5) 18'x14' FULL HIP CANTILEVER SHADE STRUCTURES BY USA SHADE	SEE DETAIL 1, SHEET L-2.11

CONTACT:

USA SHADE, CONTACT: DEVIN CHISTENSEN (714) 427-6981

BLEACHER LEGEND

	DESCRIPTION:	COMMENTS:
B1	6-ROW LEG TRUSS BLEACHER 63' WIDE X 12' DEEP	SEE DETAIL SHEETS L-2.07-L-2.09

CONTACT:

AVAILABLE FROM: SOUTHERN BLEACHER, CONTACT: JOE HOY (916) 812-4901 OR APPROVED EQUAL

LINETYPE LEGEND:

DESCRIPTION:	COMMENTS:
	LIMIT OF WORK
	SCE UNDERGROUND UTILITY EASEMENT

HARDSCAPE COLOR / FINISH SCHEDULE:

	DESCRIPTION:	
A	MATERIAL:	4.5" PEDESTRIAN CONCRETE
	COLOR:	NATURAL GREY
	FINISH:	LIGHT BROOM FINISH
B	MATERIAL:	4.5" PEDESTRIAN CONCRETE
	COLOR:	NATURAL GREY
	FINISH:	RETARDANT FINISH BY 'TOP-CAST' OR APPROVED EQUAL. ETCH CODE "NO. 05"
C	MATERIAL:	6" VEHICULAR CONCRETE
	COLOR:	NATURAL GREY
	FINISH:	RETARDANT FINISH BY 'TOP-CAST' OR APPROVED EQUAL. ETCH CODE "NO. 05"
D	MATERIAL:	6" PEDESTRIAN CONCRETE POOL DECK
	COLOR:	NATURAL GRAY
	FINISH:	MEDIUM BROOM FINISH
E	MATERIAL:	POURED-IN-PLACE CONCRETE LOW WALLS
	COLOR:	NATURAL GRAY
	FINISH:	RETARDANT FINISH BY 'TOP-CAST' OR APPROVED EQUAL. ETCH CODE "NO. 05"

CONTACTS:

'TOP-CAST' AVAILABLE FROM DAYTON SUPERIOR, CONTACT: CHUCK POOLE, PHONE: (714) 822-5085 OR APPROVED EQUAL

ENGINEER OF RECORD STATEMENT:

ALL EASEMENTS HAVE BEEN SHOWN AS PER PROVIDED PRELIMINARY TITLE REPORTS BY FIDELITY NATIONAL TITLE CO. (ORDER NO. 987-30076643-18V, DATED OCT. 28, 2021), LAWYERS TITLE (FILE NO. 218254769, DATED SEPT. 7, 2018), AND FIDELITY NATIONAL TITLE CO. (ORDER NO. 989-30033538-D-DL1, DATED FEB. 9, 2021).

THOMAS F. CARCELLI, P.E. — 10/02/2023 DATE

GRAPHIC SCALE

(IN FEET)
1" = 10'

DIGALERT
DIAL TOLL FREE
1-800-422-4133
AT LEAST TWO DAYS BEFORE YOU DIG
UNDERGROUND SERVICE ALERT OF SOUTHERN CALIFORNIA

BASIS OF BEARINGS:

BEARINGS SHOWN HEREON ARE BASED ON THE CENTERLINE OF 162 ND STREET (FORMERLY MARKET STREET) BEING N 89° 55' 30" E SHOWN ON TRACT NO. 10901, M.B. 254/31-32

BENCHMARK:

THE CITY OF GARDENA BENCHMARK NO. 5D-15 ELEV. = 43.508

CONSULTANT:

PREPARED UNDER THE SUPERVISION OF:

RJM DESIGN GROUP
31591 Camino Capistrano
San Juan Capistrano, CA 92675
www.RJMdesigngroup.com
[949] 493-2690 fax
[949] 493-2600 phone

REGISTERED LANDSCAPE ARCHITECT — STATE OF CALIFORNIA — 5/31/2023

REVISIONS

NO.	DESCRIPTION	DATE	APPROVED
1	90% CD SUBMITTAL	12/15/2022	
2	100% CD SUBMITTAL	05/01/2023	
3	FINAL SUBMITTAL	10/02/2023	

CITY OF GARDENA
DEPARTMENT OF PUBLIC WORKS - ENGINEERING

CONSTRUCTION PLAN

COMMUNITY AQUATICS & SENIOR CENTER

L-1.01

	INITAL	DATE
DESIGNED BY	EC	11/14/2022
DRAWN BY	TP	06/20/2023
CHECKED BY	EC	10/02/2023

APPROVED BY:

DATE DIRECTOR OF PUBLIC WORKS

SHT. 14 OF 195 DWG. NO. 5-2606

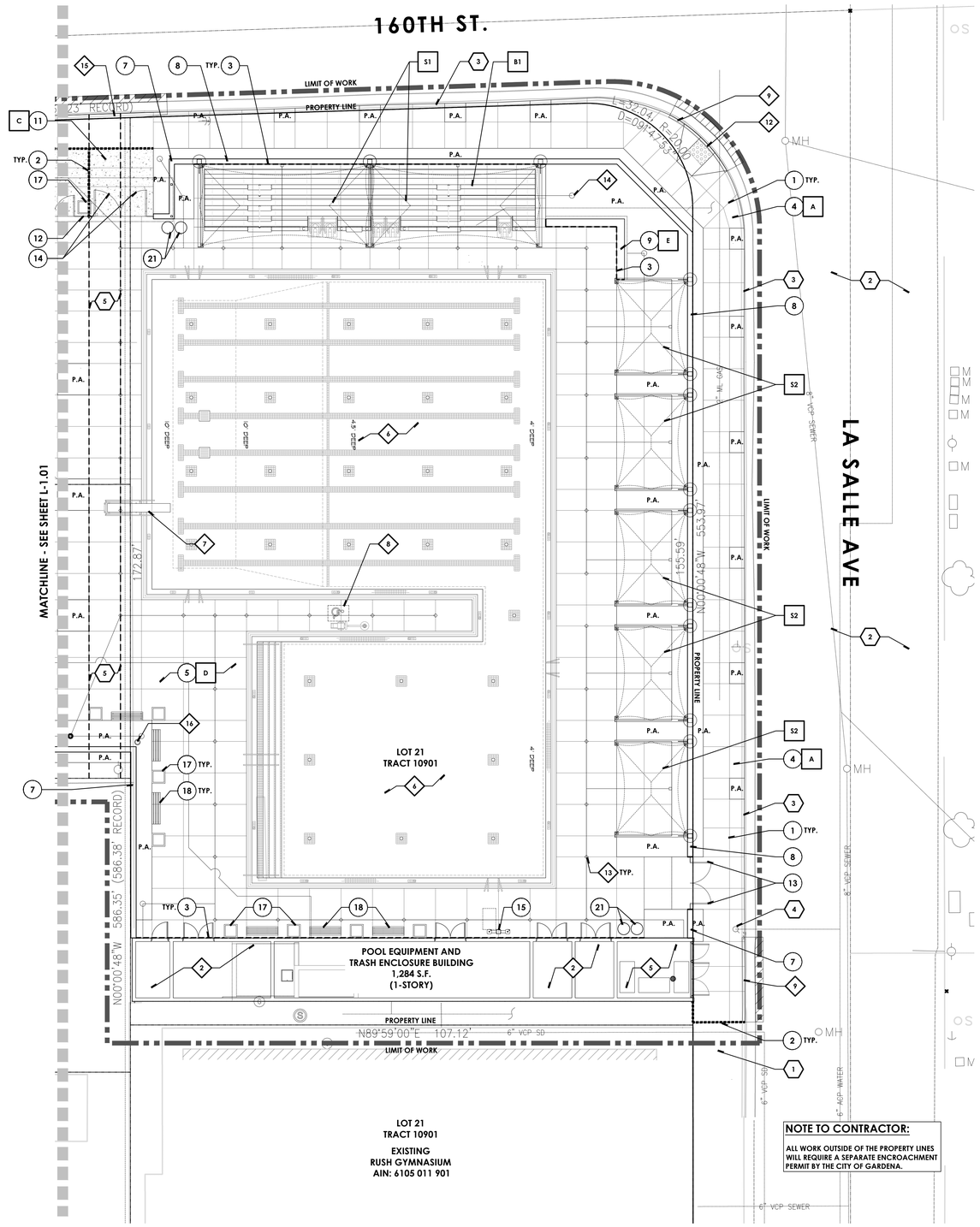

CONSTRUCTION LEGEND:

	CONSTRUCT:	DETAIL REFERENCE:
1	SAWCUT CONTROL JOINT	DETAIL: 3 SHEET: L-2.01
2	COLD JOINT	DETAIL: 3 SHEET: L-2.01
3	EXPANSION JOINT	DETAIL: 3 SHEET: L-2.01
4	4.5" STANDARD PEDESTRIAN CONCRETE PAVING	DETAIL: 1 SHEET: L-2.01
5	6" PEDESTRIAN CONCRETE PAVING AT POOL DECKING	DETAIL: 2 SHEET: L-2.01
6	12" CONCRETE MOWCURB	DETAIL: 4 SHEET: L-2.01
7	8' HT. CONCRETE MASONRY BLOCK PERIMETER WALL	DETAIL: 6 SHEET: L-2.01
8	8' HT. CONCRETE MASONRY BLOCK PERIMETER WALL AT SHADE STRUCTURES	DETAIL: 1 SHEET: L-2.02
9	20" HT. POURED-IN-PLACE CONCRETE LOW WALL	DETAIL: 2 SHEET: L-2.02
10	ADA ACCESSIBLE PARKING SIGNAGE	DETAIL: 5 SHEET: L-2.01
11	6" VEHICULAR CONCRETE PAVING	DETAIL: 1 SHEET: L-2.01
12	8' HT. TUBULAR STEEL FENCING	DETAIL: 2 SHEET: L-2.03
13	8' HT. TUBULAR STEEL PEDESTRIAN GATES	DETAIL: 1 SHEET: L-2.03
14	MAINTENANCE ACCESS GATES	DETAIL: 3 SHEET: L-2.03
15	ADA PEDESTAL DRINKING FOUNTAIN WITH BOTTLE FILLER	DETAIL: 1 SHEET: L-2.04
16	OUTDOOR FITNESS EQUIPMENT	DETAIL: 1 SHEET: L-2.06
17	30" SQ. PRECAST CONCRETE PLANTERS	DETAIL: 3 SHEET: L-2.05
18	BENCH SEATING	DETAIL: 1 SHEET: L-2.05
19	6' PICNIC TABLE	DETAIL: 2 SHEET: L-2.05
20	42" ROUND TABLE WITH SEATS	DETAIL: 4 SHEET: L-2.05
21	WASTE / RECYCLING RECEPTACLES	DETAIL: 5 SHEET: L-2.05

WORK BY OTHER DISCIPLINES:

	DESCRIPTION:	COMMENTS:
1	SENIOR CENTER / AQUATICS CENTER BUILDING	PER SVA PLANS
2	POOL EQUIPMENT / STORAGE BUILDING	PER SVA PLANS
3	CONCRETE BUILDING FOUNDATION	PER SVA PLANS
4	BUILDING TRELLIS / SHADE STRUCTURE	PER SVA PLANS
5	TRASH ENCLOSURE	PER SVA PLANS
6	SWIMMING POOL	PER JONES & MADHAVAN PLANS
7	DIVING BOARD	PER JONES & MADHAVAN PLANS
8	ADA COMPLIANT POOL LIFT	PER JONES & MADHAVAN PLANS
9	CONCRETE CURB AND GUTTER	PER CIVTEC PLANS
10	PARKING LOT A.C. PAVING	PER CIVTEC PLANS
11	ADA PARKING STALL STRIPING AND WHEEL STOPS	PER CIVTEC PLANS
12	ADA ACCESSIBLE RAMP W/ TRUNCATED DOMES	PER CIVTEC PLANS
13	POOL DECK DRAINS	PER CIVTEC PLANS
14	LANDSCAPE AREA DRAINS	PER CIVTEC PLANS
15	ROLLED CONCRETE CURB	PER CIVTEC PLANS
16	PEDESTRIAN LIGHTING	PER FBA ENGINEERING ELECTRICAL PLANS
17	ELECTRICAL TRANSFORMER	PER FBA ENGINEERING ELECTRICAL PLANS
18	CMU WALL WITH TRELLIS POST	PER SVA PLANS
19	PEDESTRIAN GATE	PER SVA PLANS

EXISTING CONDITIONS:

	DESCRIPTION:	COMMENTS:
1	EXISTING CONCRETE PAVING	PROTECT-IN-PLACE PER CIVIL PLANS
2	EXISTING ASPHALT PAVING	PROTECT-IN-PLACE PER CIVIL PLANS
3	EXISTING CONCRETE CURB AND GUTTER	PROTECT-IN-PLACE PER CIVIL PLANS
4	EXISTING UTILITY	PROTECT-IN-PLACE PER CIVIL PLANS
5	EXISTING SCE UNDERGROUND UTILITY EASEMENT	SEE UTILITY PLANS

SHADE STRUCTURE LEGEND

	DESCRIPTION:	COMMENTS:
S1	ONE (1) 65'x16' JOINED FULL HIP CANTILEVER SHADE STRUCTURE BY USA SHADE	SEE DETAIL 1, SHEET L-2.10
S2	FIVE (5) 18'x14' FULL HIP CANTILEVER SHADE STRUCTURES BY USA SHADE	SEE DETAIL 1, SHEET L-2.11

CONTACT:

USA SHADE, CONTACT: DEVIN CHISTENSEN (714) 427-6981

BLEACHER LEGEND

	DESCRIPTION:	COMMENTS:
B1	6-ROW LEG TRUSS BLEACHER 63' WIDE X 12' DEEP	SEE DETAIL SHEETS L-2.07-L-2.09

CONTACT:

AVAILABLE FROM: SOUTHERN BLEACHER, CONTACT: JOE HOY (916) 812-4901 OR APPROVED EQUAL

LINETYPE LEGEND:

DESCRIPTION:	COMMENTS:
	LIMIT OF WORK
	SCE UNDERGROUND UTILITY EASEMENT

HARDSCAPE COLOR / FINISH SCHEDULE:

	DESCRIPTION:	
A	MATERIAL:	4.5" PEDESTRIAN CONCRETE
	COLOR:	NATURAL GREY
	FINISH:	LIGHT BROOM FINISH
B	MATERIAL:	4.5" PEDESTRIAN CONCRETE
	COLOR:	NATURAL GREY
	FINISH:	RETARDANT FINISH BY 'TOP-CAST' OR APPROVED EQUAL. ETCH CODE "NO. 05"
C	MATERIAL:	6" VEHICULAR CONCRETE
	COLOR:	NATURAL GREY
	FINISH:	RETARDANT FINISH BY 'TOP-CAST' OR APPROVED EQUAL. ETCH CODE "NO. 05"
D	MATERIAL:	6" PEDESTRIAN CONCRETE POOL DECK
	COLOR:	NATURAL GRAY
	FINISH:	MEDIUM BROOM FINISH
E	MATERIAL:	POURED-IN-PLACE CONCRETE LOW WALLS
	COLOR:	NATURAL GRAY
	FINISH:	RETARDANT FINISH BY 'TOP-CAST' OR APPROVED EQUAL. ETCH CODE "NO. 05"

CONTACTS:

'TOP-CAST' AVAILABLE FROM DAYTON SUPERIOR, CONTACT: CHUCK POOLE, PHONE: (714) 822-5085 OR APPROVED EQUAL

ENGINEER OF RECORD STATEMENT:

ALL EASEMENTS HAVE BEEN SHOWN AS PER PROVIDED PRELIMINARY TITLE REPORTS BY FIDELITY NATIONAL TITLE CO. (ORDER NO. 987-30076643-1RV, DATED OCT. 28, 2021), LAWYERS TITLE (FILE NO. 218254769, DATED SEPT. 7, 2018), AND FIDELITY NATIONAL TITLE CO. (ORDER NO. 989-30033538-D-DL1, DATED FEB. 9, 2021).

THOMAS E. CARCELLI, P.E. — 10/02/2023 DATE

GRAPHIC SCALE

(IN FEET)
1" = 10'

DIGALERT
DIAL TOLL FREE
1-800-422-4133
AT LEAST TWO DAYS BEFORE YOU DIG
UNDERGROUND SERVICE ALERT OF SOUTHERN CALIFORNIA

BASIS OF BEARINGS:

BEARINGS SHOWN HEREON ARE BASED ON THE CENTERLINE OF 162 ND STREET (FORMERLY MARKET STREET) BEING N 89° 55' 30" E SHOWN ON TRACT NO. 10901, M.B. 254/31-32

BENCHMARK:

THE CITY OF GARDENA BENCHMARK NO. 5D-15 ELEV. = 43.508

CONSULTANT:

PREPARED UNDER THE SUPERVISION OF:

RJM DESIGN GROUP
31591 Camino Capistrano
San Juan Capistrano, CA 92675
www.RJMdesigngroup.com
[949] 493-2600 fax
[949] 493-2600 phone

REGISTERED LANDSCAPE ARCHITECT — STATE OF CALIFORNIA — 09.30.2023 — 06.30.2025

REVISIONS

NO.	DESCRIPTION	DATE	APPROVED
1	90% CD SUBMITTAL	12/15/2022	
2	100% CD SUBMITTAL	05/01/2023	
3	FINAL SUBMITTAL	10/02/2023	

CITY OF GARDENA
DEPARTMENT OF PUBLIC WORKS - ENGINEERING

CONSTRUCTION PLAN

COMMUNITY AQUATICS & SENIOR CENTER
L-1.02

	INITAL	DATE
DESIGNED BY	EC	11/14/2022
DRAWN BY	TP	06/20/2023
CHECKED BY	EC	10/02/2023

APPROVED BY:

DATE DIRECTOR OF PUBLIC WORKS

SHT. 15 OF 195 DWG. NO. S-2606

ALL PLANS, DESIGNS, DRAWINGS AND SPECIFICATIONS ARE THE PROPERTY OF RJM DESIGN GROUP AND ARE NOT TO BE USED IN WHOLE OR IN PART FOR ANY OTHER PROJECT WITHOUT THE WRITTEN AUTHORIZATION OF RJM DESIGN GROUP. © COPYRIGHT 2023 RJM DESIGN GROUP

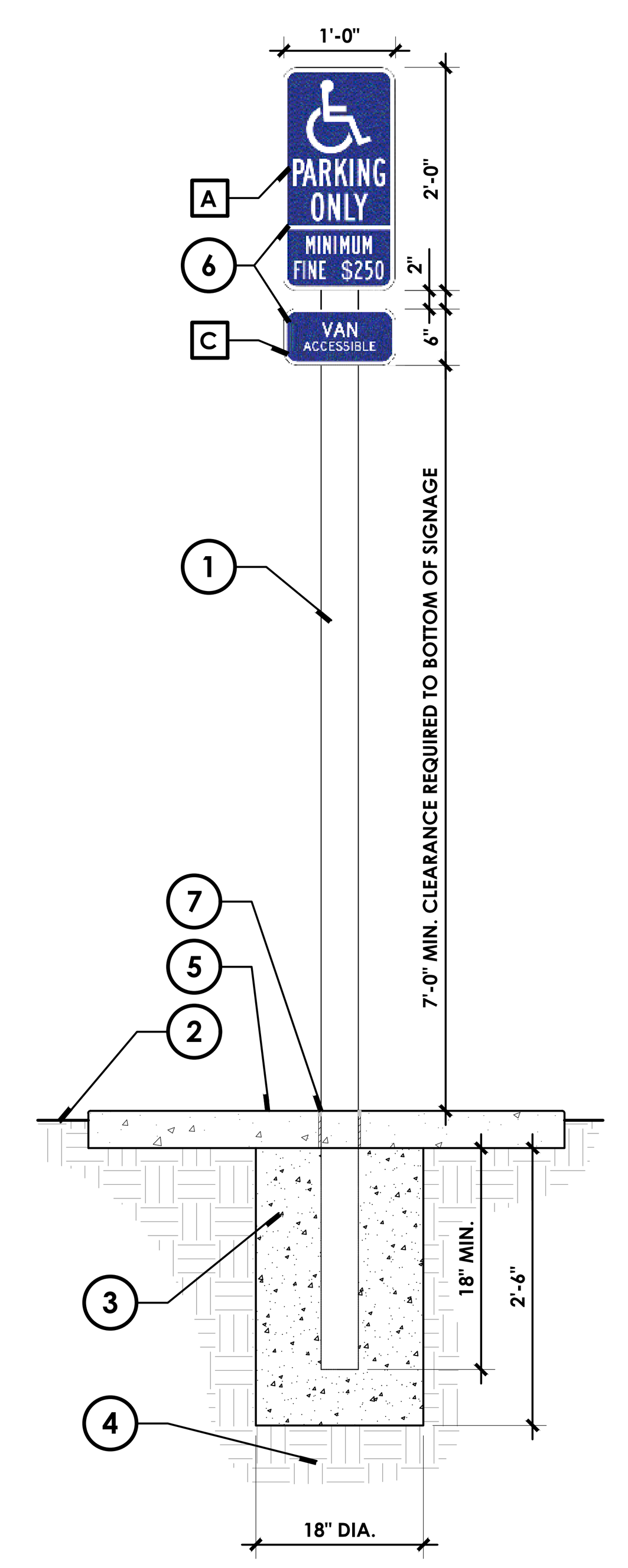

SECTION - ACCESSIBLE PARKING SIGNAGE
SCALE: 3/4" = 1'-0"

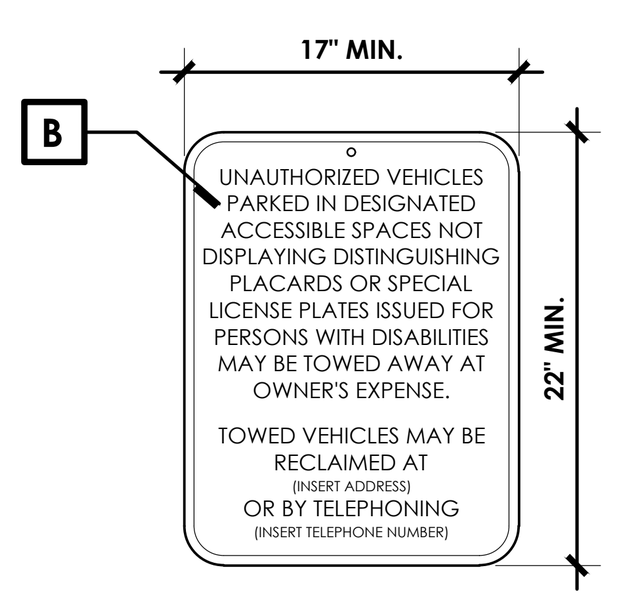

SIGNAGE TYPE:

- (A) ADA PARKING SIGN (USED ON ALL ADA STALLS, INCLUDING VAN) CALTRANS STD. SIGN #R99C
- (B) ADA ADDITIONAL PARKING SIGN PER CBC 11B-502.8. INSTALL ON WALL/FENCE, LOCATION PER ENLARGEMENT SHEET T-1.03.
- (C) ADA VAN PARKING SIGN (USED ONLY ON VAN ACCESSIBLE STALLS, INSTALLED BELOW ADA PARKING SIGN) CALTRANS STD. SIGN #R7-8B

LEGEND:

1. 4"x4" EXTRUDED ALUMINUM POWDER COATED POST WITH POST CAP. POST TO BE LOCATED AS SHOWN LANDSCAPE CONSTRUCTION PLAN, SEE SHEET L-1.01.
2. FINISH GRADE - SEE CIVIL PLANS.
3. POURED-IN-PLACE CONCRETE FOOTING AND REINFORCEMENT,AS SHOWN THIS DETAIL.
4. 90% MINIMUM COMPACTED, MOISTURE-CONDITIONED SUBGRADE PER GEOTECHNICAL REPORT.
5. ADJACENT CONCRETE PAVING PER DETAIL 1, THIS SHEET.
6. PROVIDE FABRICATED ALUMINUM PANEL(S) WITH SILK SCREEN GRAPHICS SIGN EACH WITH (2) BOLTS & WASHERS AND MOUNTING CHANNEL. SEE CONSTRUCTION PLAN L-1.01 AND NOTES BELOW FOR SIGN TYPE AND LOCATION. MINIMUM 7'-0" CLEARANCE FROM FINISHED GRADE TO BOTTOM OF LOWEST SIGN.
7. ¼" EXPANSION JOINT MATERIAL SURROUNDING POST AT SLAB ONLY. SEE SPECIFICATIONS. PROVIDE CORE DRILL IN CONCRETE PAVING / FOOTING TWICE THE WIDTH OF THE POST, TO THE DEPTH OF 18". SECURE WITH SUPER POR-ROK, OR APPROVED EQUAL, TO ½" BELOW ADJACENT FINISH SURFACE. APPLY ½" BEAD OF "GUN GRADE" POLYMER SEALANT BY: PECORA, OR APPROVED EQUAL, TO TOP OF SUPER POR-ROK BACKFILL. SEALANT COLOR TO MATCH ADJACENT CONCRETE. SLOPE TO DRAIN AT POST BASE.
8. CONTINUOUS EXPANSION JOINT PER DETAIL 2, SHEET L-2.01.
9. SAWCUT CONTROL JOINT PER SHEET 2, SHEET L-2.01.

NOTES:

- (A) CONTRACTOR TO STAKE OUT PROPOSED LOCATION OF SIGN IN FIELD FOR REVIEW AND APPROVAL BY CITY PRIOR TO INSTALLATION.
- (B) PROVIDE SCALED SHOP DRAWINGS FOR REVIEW AND APPROVAL PRIOR TO CONSTRUCTION.
- (C) CONTRACTOR TO SUBMIT SAMPLE OF THE SIGN FOR REVIEW AND APPROVAL BY COUNTY PRIOR TO FABRICATION PER SPECIFICATIONS.
- (D) REGULATORY SIGNS SHALL BE NO LESS THAN 17" BY 22" IN SIZE AS SHOWN, WITH LETTERING NOT LESS THAN 1" IN HEIGHT.
- (E) CONCRETE AND REINFORCING INFORMATION INDICATED HEREIN, ARE MINIMUMS AND ARE BASED ON INFORMATION CONTAINED IN THE PROJECT GEOTECHNICAL REPORT AVAILABLE REPORT AT THE TIME OF PREPARATION OF THESE DOCUMENTS.

5 ADA ACCESSIBLE PARKING SIGNAGE

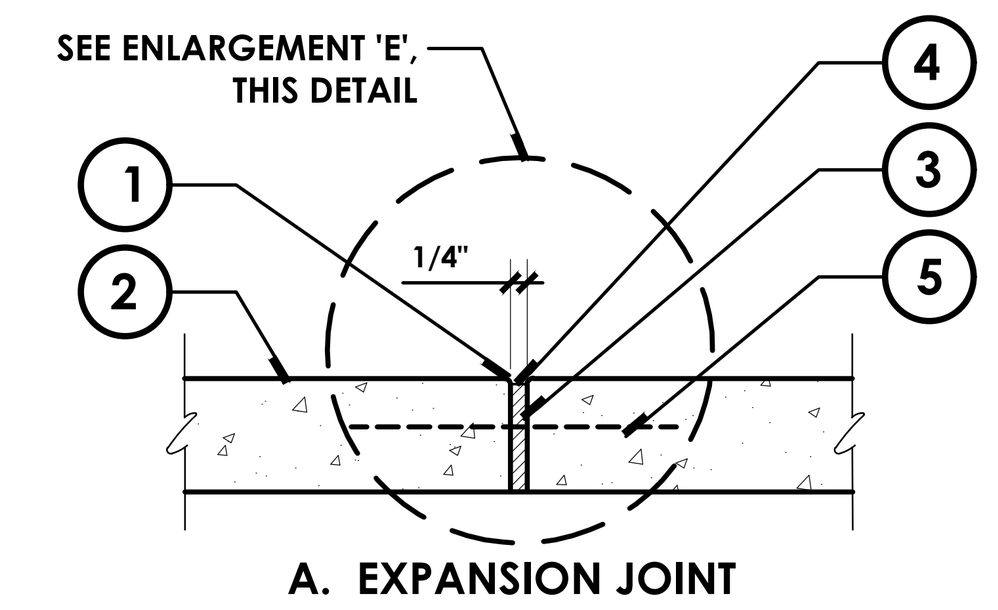

A. EXPANSION JOINT

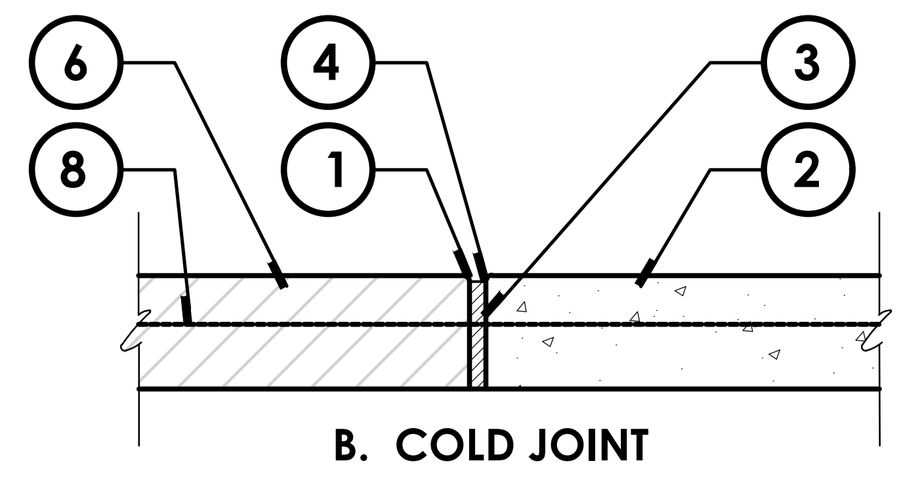

B. COLD JOINT

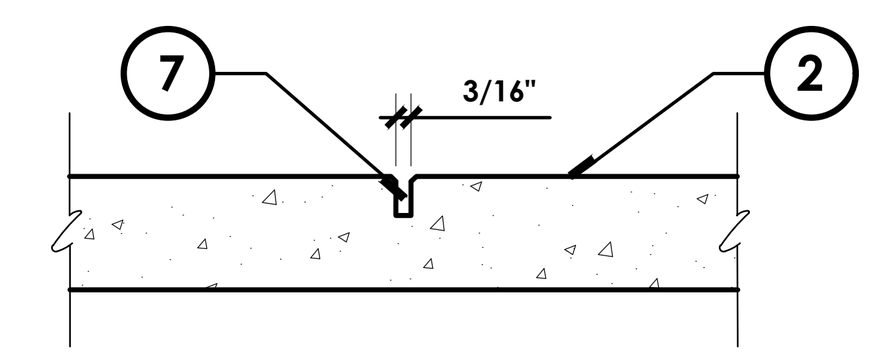

C. SAWCUT CONTROL JOINT

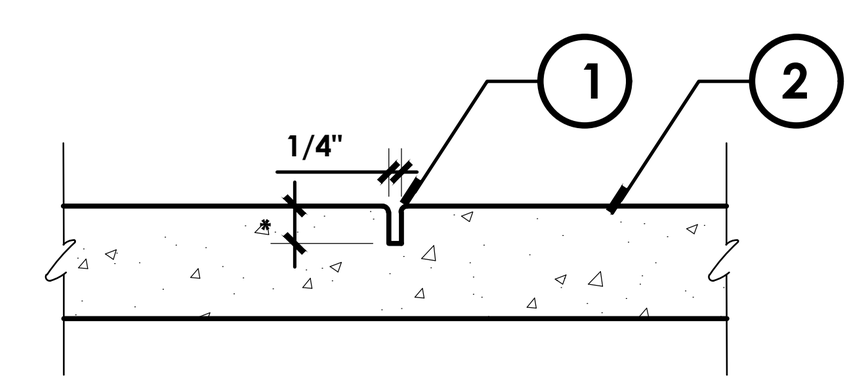

D. TOOLED CONTROL JOINT

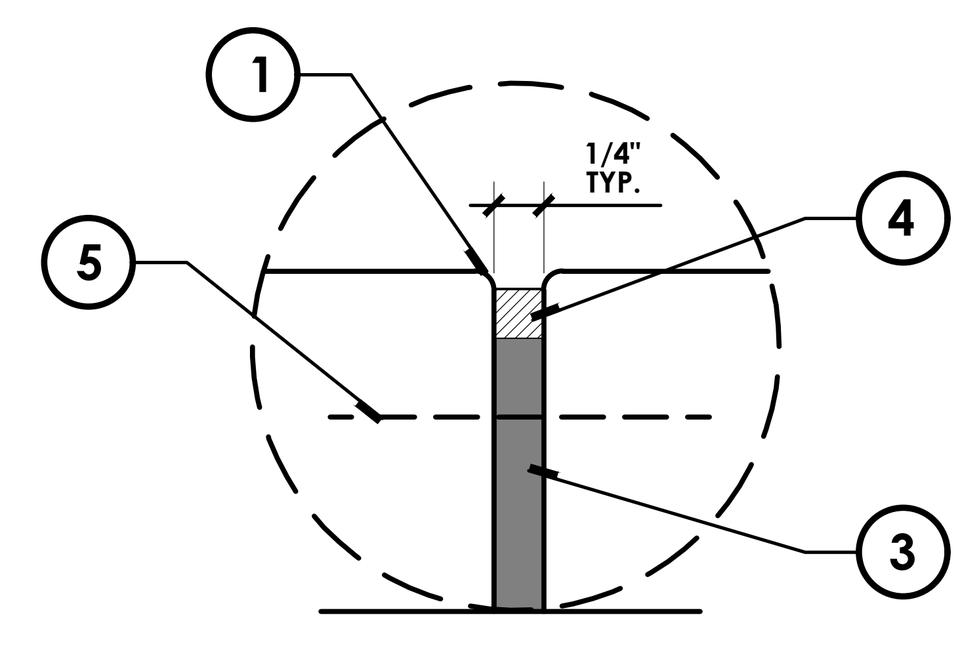

E. EXPANSION JOINT ENLARGEMENT

LEGEND:

1. 1/4" RADIUS EDGE.
2. PAVING FINISH SURFACE PER PLAN.
3. ¼" DECK-O-FOAM EXPANSION MATERIAL BY: W.R. MEADOWS, OR APPROVED EQUAL. INSTALL PER MANUF. SPECS. (909) 469-2606.
4. NON-SAG TWO-PART POLYURETHANE SEALER (DYNA TRED) BY: PECORA CORPORATION (800) 523-6688, OR APPROVED EQUAL.

   FOR BID PURPOSES:
   COLOR SHALL BE:
   A. "LIMESTONE" (039) IN FIELDS OF NATURAL GREY CONCRETE.
   B. "BEIGE" (595) IN FIELDS OF COLORED CONCRETE.
   FINAL SEALANT COLOR SELECTION SHALL BE PER OWNER UPON REVIEW AND APPROVAL OF CONTRACTOR PROVIDED PAVING SAMPLES IN THE FIELD. SEE SPECIFICATIONS.
5. SPEED-DOWEL AT 24" O.C. AT ALL EXPANSION JOINTS W/ #4 REBAR, MODEL NO. PSD 12/ #4 TS. WITH PSD/#4 BL BASE. CONTACT: AZTEC CONCRETE ACCESSORIES (800) 531-3355.
6. EXISTING CONCRETE PAVING.
7. SAWCUT JOINT. SINGLE BLADE WITH 1/16" BEVEL AND CONTINUOUS CRACK CHASER. SEE SAWCUT CONTROL JOINT TABLE BELOW FOR DEPTH OF SAWCUTS.
8. #3 REBAR AT 24" O.C.

NOTES:

- (A) LOCATE SAWCUT JOINTS PER SPECIFICATIONS UNLESS OTHERWISE INDICATED ON PLANS. SEE GEOTECHNICAL REPORT FOR MAXIMUM JOINT SPACING BASED ON SIDEWALK WIDTH. SEE PLANS FOR JOINT LOCATIONS. NOTIFY OWNER'S REPRESENTATIVE IF JOINT SPACING ON PLANS DOES NOT CONFORM TO GEOTECHNICAL REPORT IN ANY AREAS.
- (B) SEALANT COLOR TO MATCH ADJACENT PAVING.
- (C) ALL EXPANSION JOINT SEALANT TO BE SEEDED WITH SILICA SAND.
- (D) ALL AQUATICS AREA REBAR TO BE FIBERGLASS.
- (E) ALL SKIMMERS AT POOL COPING SHALL BE SURROUNDED BY EXPANSION JOINT MATERIAL.

SAWCUT CONTROL JOINT TABLE

TOTAL CONCRETE THICKNESS	DEPTH OF SAWCUT
4"	1"
5"	1.25"
6" OR GREATER	1.5"

3 CONCRETE JOINTS

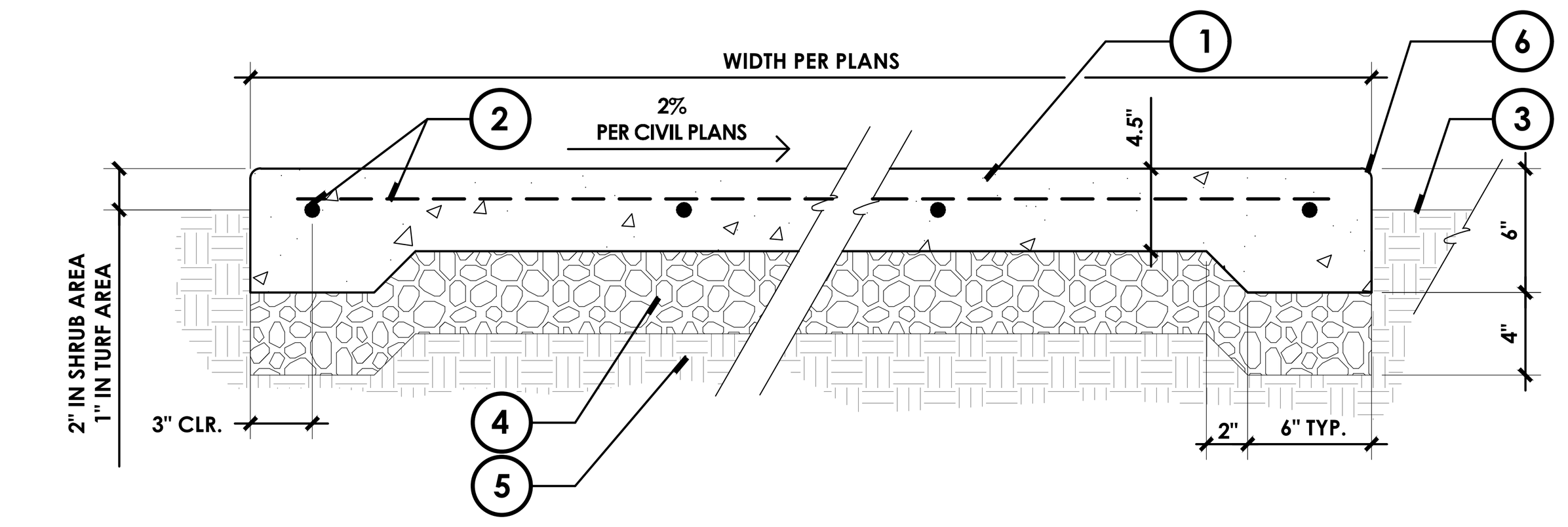

(A) SECTION - PEDESTRIAN CONCRETE PAVING
SCALE: 1-1/2" = 1'-0"

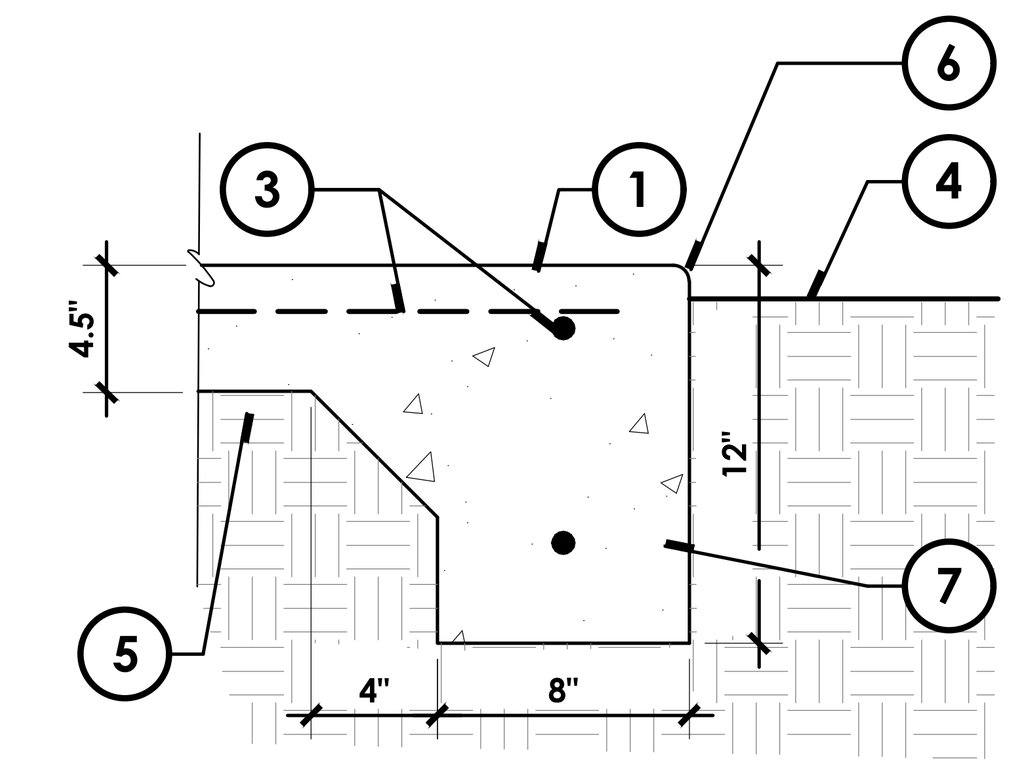

(B) THICKENED EDGE
SCALE: 1-1/2" = 1'-0"

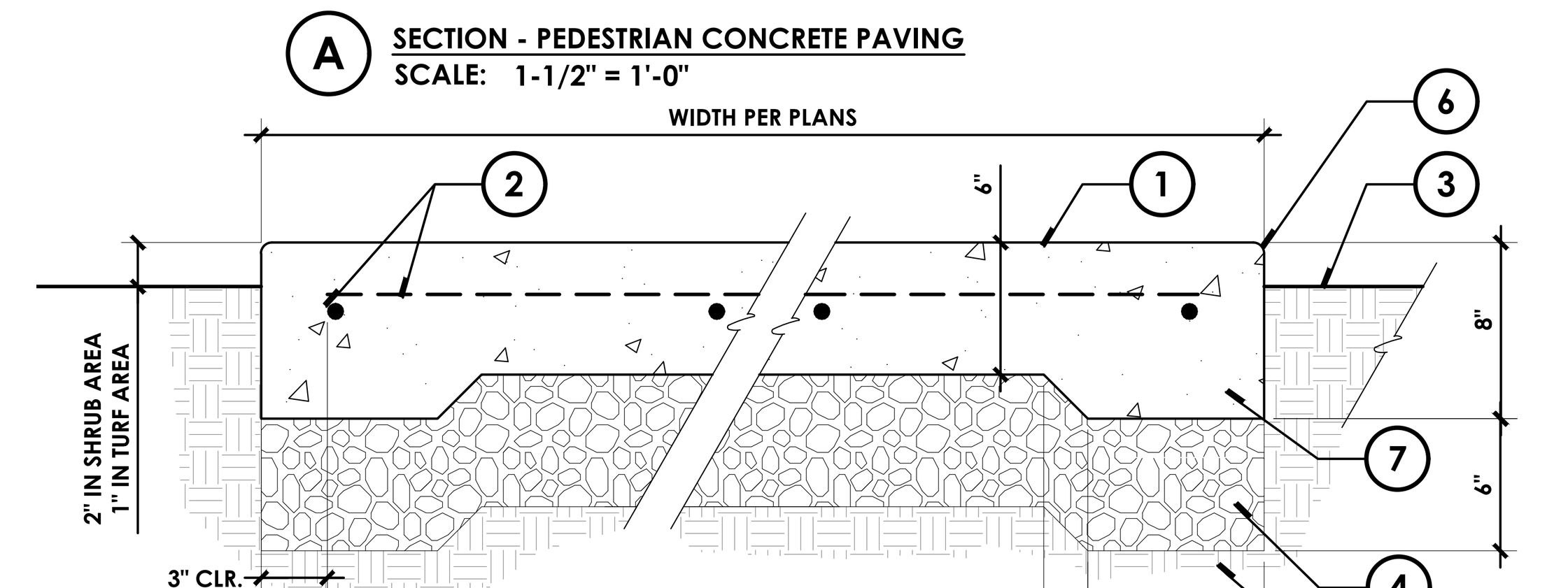

(B) SECTION - VEHICULAR CONCRETE PAVING
SCALE: 1-1/2" = 1'-0"

LEGEND:

1. CONCRETE PAVING - REFER TO CONSTRUCTION PLAN FOR COLOR AND FINISH. DIMENSIONS PER THIS DETAIL.
2. #4 REBAR AT 18" O.C. IN BOTH DIRECTIONS, PER GEOTECHNICAL REPORT.
3. FINISH GRADE. SEE CIVIL PLANS.
4. 4" CRUSHED AGGREGATE BASE PER SPECIFICATIONS.
5. 90% MINIMUM COMPACTED, MOISTURE-CONDITIONED SUBGRADE PER GEOTECHNICAL REPORT. SEE SPECIFICATIONS.
6. 1/2" TOOLED RADIUS.
7. THICKENED EDGE PER GEOTECHNICAL REPORT.

NOTES:

- (A) PROVIDE FINISH SAMPLE PER PLANS AND SPECIFICATIONS.
- (B) SEE GEOTECHNICAL REPORT (PAVEMENT RECOMMENDATIONS) FOR CONCRETE TYPE AND STRENGTH. SEE SPECIFICATIONS.
- (C) CONCRETE PAVING ADJACENT TO PLANTING AREAS SHOULD UTILIZE A THICKENED EDGE PER THIS DETAIL. SEE GEOTECHNICAL REPORT.
- (D) CONCRETE AND REINFORCING INFORMATION INDICATED HEREIN, ARE MINIMUMS AND ARE BASED ON INFORMATION CONTAINED IN THE PROJECT GEOTECHNICAL REPORT AVAILABLE AT THE TIME OF PREPARATION OF THESE DOCUMENTS. PRIOR TO START OF CONSTRUCTION, THE CONTRACTOR SHALL OBTAIN AND REVIEW THE RECOMMENDATIONS CONTAINED IN THE LATEST AND FINAL APPROVED GEOTECHNICAL REPORT SPECIFIC TO THIS PROJECT. THE CONTRACTOR SHALL PROVIDE ADDITIONAL CONCRETE, REINFORCING, SUB-BASE MATERIALS, SUB-BASE PREPARATION SUCH AS COMPACTION, MOISTURE CONDITIONING, ETC., AS MAY BE REQUIRED BY THE LATEST AND FINAL APPROVED PROJECT GEOTECHNICAL REPORT.
- (E) PROVIDE 1/4" CROSS FALL PER 12" RUN ON ALL PAVING - MINIMUM. SEE CIVIL PLANS.
- (F) SEE DETAIL 3, THIS SHEET FOR CONCRETE JOINTS.
- (G) CONTRACTOR TO PROVIDE MIN. 4' x 4' MOCKUP OF CONCRETE SLAB FOR REVIEW AND APPROVAL PRIOR TO ANY CONSTRUCTION.

1 CONCRETE PAVING (STANDARD)

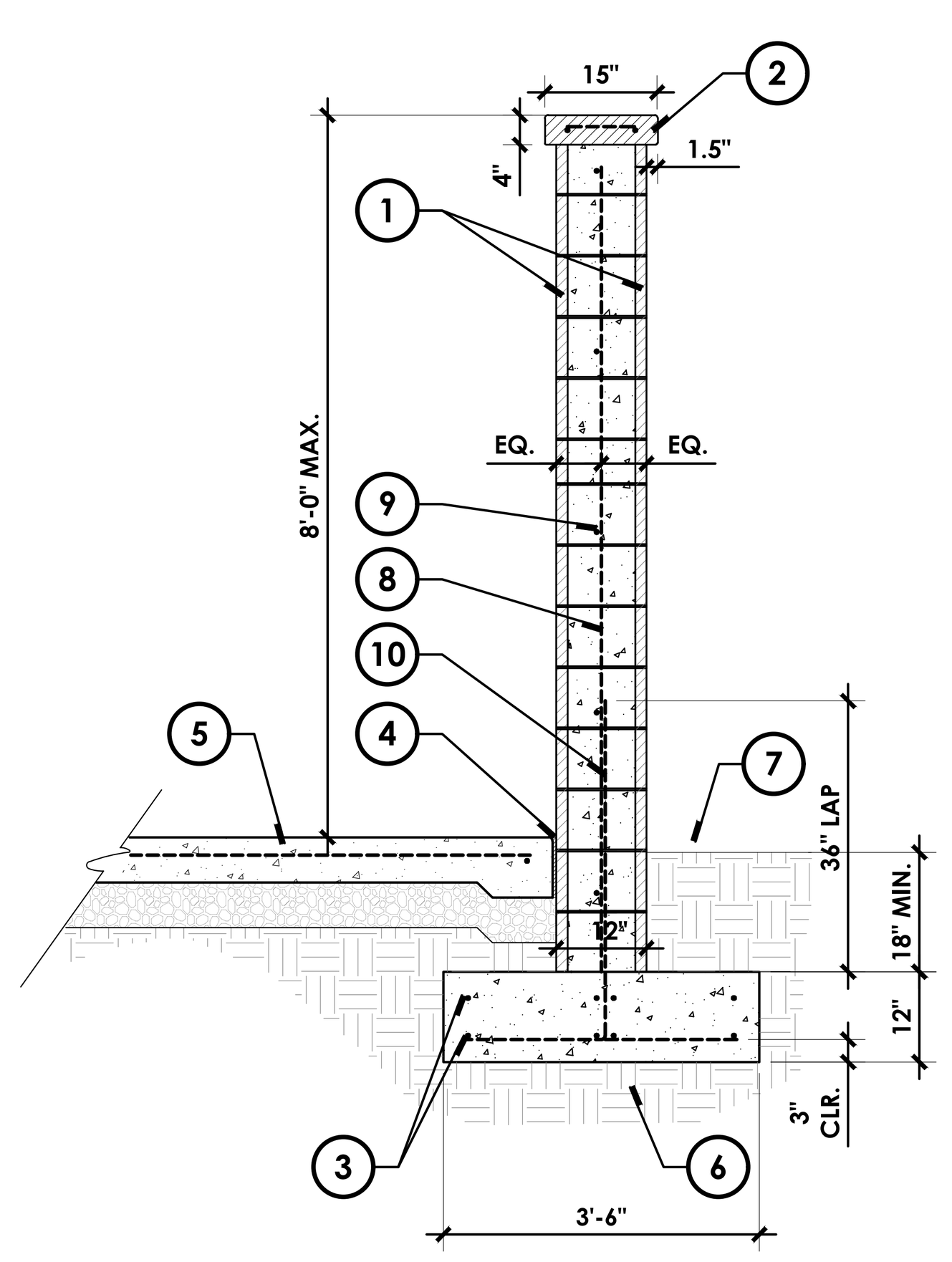

SECTION - CONCRETE BLOCK PERIMETER WALL
SCALE: 1/2" = 1'-0"

LEGEND:

1. 12" X 8" X 16" INTEGRAL COLOR, PRECISION CONCRETE BLOCK. SOLID GROUT ALL CELLS. COLOR: NATURAL GRAY - TO MATCH ARCHITECTURE.
2. POURED-IN-PLACE CONCRETE CAP TO RECEIVE 'TOP CAST' ETCH CODE NO. 05 RETARDANT FINISH, OR APPROVED EQUAL. CONCRETE CAP TO OVERHANG 1.5" BEYOND SPLIT FACE BLOCK FINISH.
3. POURED-IN-PLACE CONCRETE FOOTING WITH (4) #5 CONTINUOUS REBAR TOP AND BOTTOM PER STRUCTURAL ENGINEER, AS SHOWN THIS DETAIL.
4. CONTINUOUS EXPANSION JOINT PER DETAIL 2, SHEET L-2.01.
5. ADJACENT CONCRETE PAVING PER DETAIL 2, SHEET L-2.01.
6. 90% MINIMUM COMPACTED, MOISTURE-CONDITIONED SUBGRADE PER GEOTECHNICAL REPORT. SEE SPECIFICATIONS.
7. FINISH GRADE. SEE CIVIL PLANS.
8. #6 REBAR AT 16" O.C. VERTICAL.
9. #5 REBAR AT 24" O.C. HORIZONTAL.
10. #6 DOWELS TO MATCH VERTICAL REINFORCEMENT. ALTERNATE BENDS.

NOTES:

- (A) VERIFY FIELD CONDITIONS PRIOR TO CONSTRUCTION.
- (B) CONTRACTOR TO PROVIDE COLOR / FINISH SAMPLE FOR REVIEW AND APPROVAL PRIOR TO FABRICATION.
- (C) CONTRACTOR TO PROVIDE 8' LONG MOCKUP OF WALL END CONDITION AND WALL CAP FOR REVIEW AND APPROVAL PRIOR TO CONSTRUCTION. MOCKUP SHALL NOT BE PART OF PRODUCTION CONSTRUCTION.
- (D) SEE GEOTECHNICAL REPORT (PAVEMENT RECOMMENDATIONS) FOR CONCRETE TYPE AND STRENGTH.

6 CONCRETE MASONRY BLOCK PERIMETER WALL

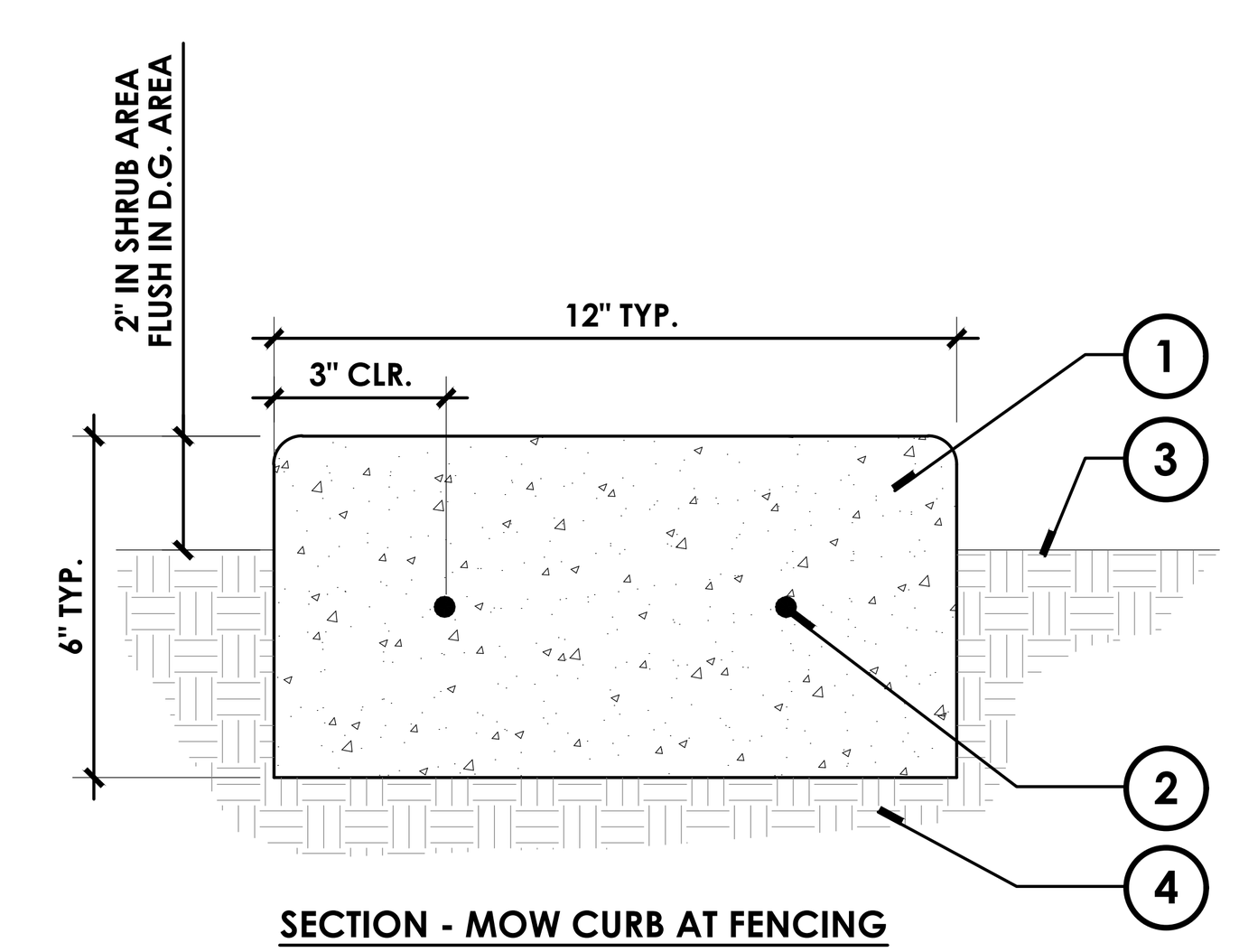

SECTION - MOW CURB AT FENCING
SCALE: 3" = 1'-0"

LEGEND:

1. POURED-IN-PLACE CONCRETE MOW CURB WITH 1/2" TOOLED RADIUS AT ALL CORNERS AND EDGES.
2. #3 REBAR, CONTINUOUS PER GEOTECHNICAL REPORT.
3. ADJACENT FINISH GRADE. SEE CIVIL PLANS.
4. 90% MINIMUM COMPACTED, MOISTURE-CONDITIONED SUBGRADE PER GEOTECHNICAL REPORT. SEE SPECIFICATIONS.

NOTES:

- (A) PROVIDE SCORE JOINTS @ 4' O.C. MAX AND AT ALL CORNERS PER CONSTRUCTION PLAN AND GEOTECH REPORT.
- (B) SEE GEOTECHNICAL REPORT (PAVEMENT RECOMMENDATIONS) FOR CONCRETE TYPE AND STRENGTH. SEE SPECIFICATIONS.
- (C) CONCRETE AND REINFORCING INFORMATION INDICATED HEREIN, ARE MINIMUMS BASED ON INFORMATION CONTAINED IN THE PROJECT GEOTECHNICAL REPORT AVAILABLE AT THE TIME OF PREPARATION OF THESE DOCUMENTS.

4 CONCRETE MOW CURB

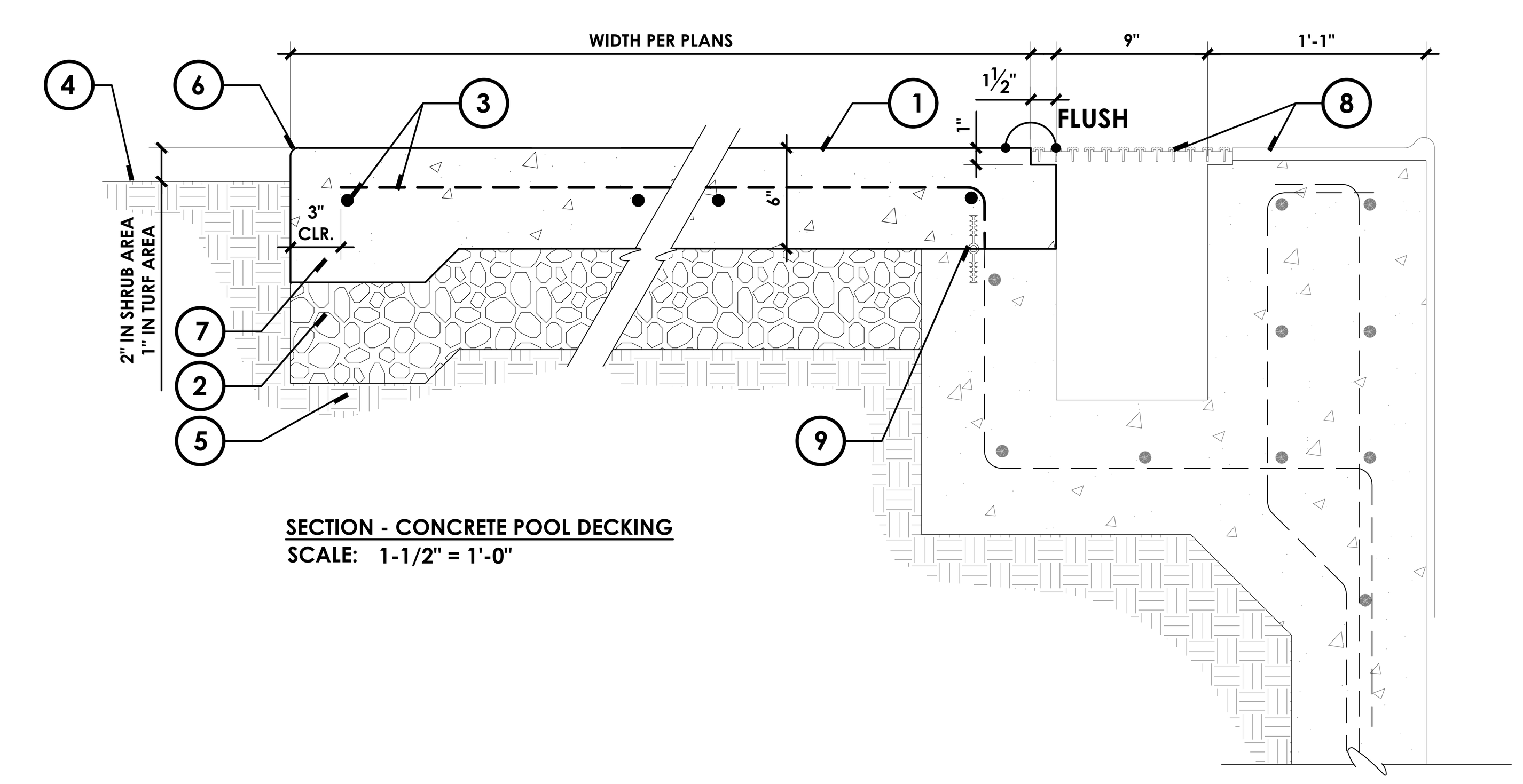

SECTION - CONCRETE POOL DECKING
SCALE: 1-1/2" = 1'-0"

LEGEND:

1. 6" PEDESTRIAN CONCRETE PAVING - REFER TO LANDSCAPE CONSTRUCTION PLAN FOR FINISH.
2. CRUSHED MISCELLANEOUS BASE. COMPACTION PER GEOTECH REPORT. REFER TO GEOTECHNICAL REPORT AND POOL PLANS. SLOPE TO DRAIN AS REQUIRED. SEE CIVIL PLANS.
3. FIBERGLASS REINFORCEMENT PER GEOTECHNICAL REPORT.
4. FINISH GRADE. SEE CIVIL PLANS.
5. 90% MINIMUM COMPACTED, MOISTURE-CONDITIONED SUBGRADE PER GEOTECHNICAL REPORT. SEE SPECIFICATIONS.
6. 1/2" TOOLED RADIUS.
7. THICKENED EDGE PER GEOTECHNICAL REPORT.
8. ADJACENT POOL COPING AND GUTTER. SEE POOL DETAILS, SHEET SP3.31.
9. 4" PVC RIBBED CENTER BULB WATERSTOP. SEE POOL DETAILS, SHEET SP1.2.

NOTES:

- (A) PROVIDE 12'x12' MOCKUP PER SPECIFICATIONS.
- (B) SEE PLANS AND SPECIFICATIONS FOR SEALERS AND FINISHES.
- (C) SEE GEOTECHNICAL REPORT (PAVEMENT RECOMMENDATIONS) FOR CONCRETE TYPE AND STRENGTH. SEE SPECIFICATIONS.
- (D) AT CONCLUSION OF ROUGH GRADING OF SITE, CONTRACTOR TO SCHEDULE SITE SOIL TESTING TO TEST SITE SOIL EXPANSION INDEX. HARDSCAPE CONSTRUCTION SHALL NOT COMMENCE UNTIL TEST RESULTS HAVE BEEN REVIEWED BY PROJECT GEOTECHNICAL ENGINEER.
- (E) PROVIDE 1/4" CROSS FALL PER 12" RUN ON ALL PAVING - MINIMUM. SEE CIVIL PLANS.
- (F) MISCELLANEOUS CRUSHED AGGREGATE BASE SHALL COMPLY/BE INSTALLED PER THE STANDARD SPECIFICATIONS FOR PUBLIC WORKS CONSTRUCTION LATEST EDITION.
- (G) CONCRETE AND REINFORCING INFORMATION INDICATED HEREIN, ARE MINIMUMS AND ARE BASED ON INFORMATION CONTAINED IN THE PROJECT GEOTECHNICAL REPORT AVAILABLE AT THE TIME OF PREPARATION OF THESE DOCUMENTS. PRIOR TO START OF CONSTRUCTION, THE CONTRACTOR SHALL OBTAIN AND REVIEW THE RECOMMENDATIONS CONTAINED IN THE LATEST AND FINAL APPROVED GEOTECHNICAL REPORT SPECIFIC TO THIS PROJECT. THE CONTRACTOR SHALL PROVIDE ADDITIONAL CONCRETE, REINFORCING, SUB-BASE MATERIALS, SUB-BASE PREPARATION SUCH AS COMPACTION, MOISTURE CONDITIONING, ETC., AS MAY BE REQUIRED BY THE LATEST AND FINAL APPROVED PROJECT GEOTECHNICAL REPORT.
- (H) ALL POOL DECKING REBAR TO BE FIBERGLASS.

2 PEDESTRIAN CONCRETE PAVING (POOL DECKING)

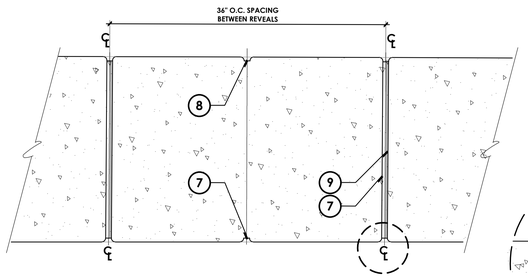

PLAN - WALL NOTCHED SKATE STOPS AND REVEALS
SCALE: 1-1/2" = 1'-0"

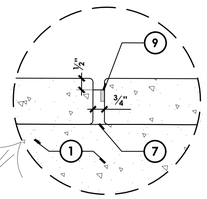

ENLARGEMENT AT REVEAL
SCALE: 1-1/2" = 1'-0"

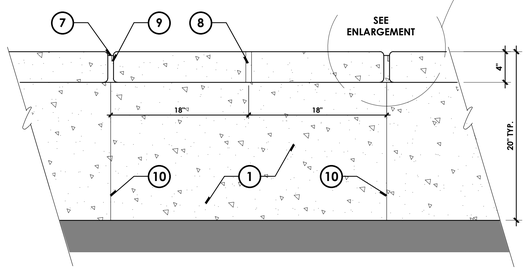

ELEVATION - WALL NOTCHED SKATE STOPS AND REVEALS
SCALE: 1-1/2" = 1'-0"

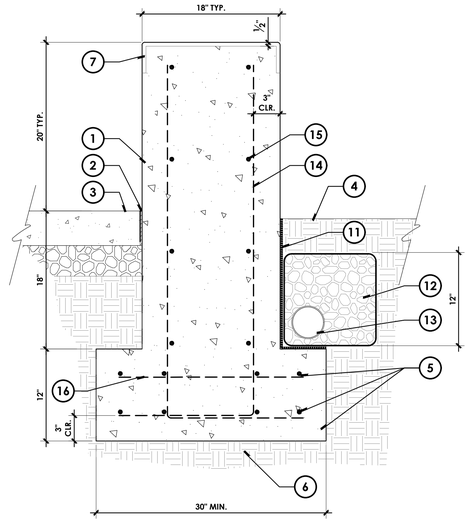

SECTION - P.I.P. CONCRETE LOW WALL (FREE STANDING)
SCALE: 1-1/2" = 1'-0"

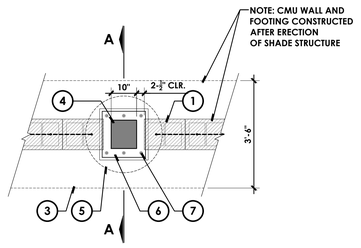

PLAN - SHADE STRUCTURE POST AND FOOTING
SCALE: 1/2" = 1'-0"

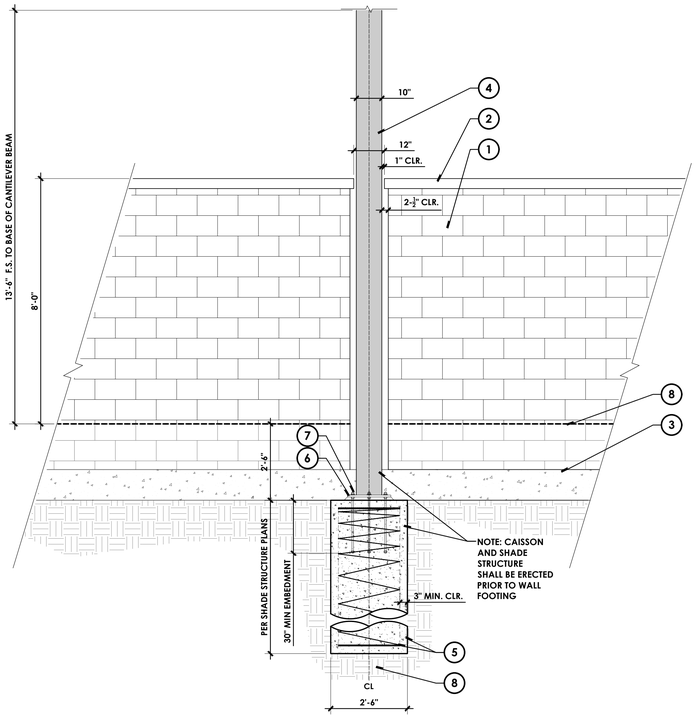

FRONT ELEVATION - SHADE STRUCTURE POST AND FOOTING
SCALE: 1/2" = 1'-0"

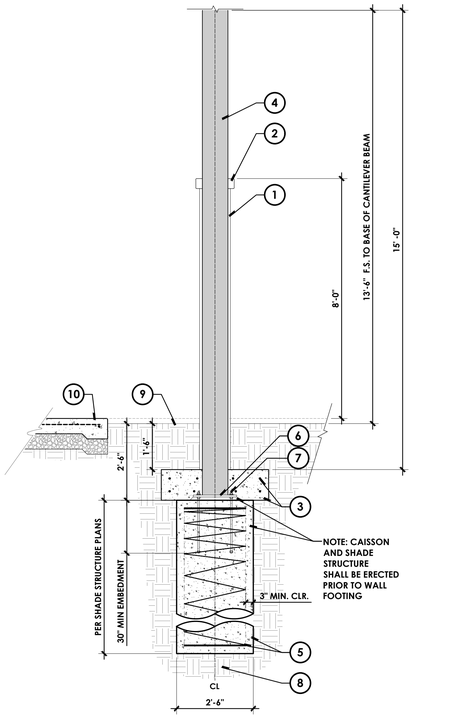

SECTION 'A-A' - SHADE STRUCTURE POST AND FOOTING
SCALE: 1/2" = 1'-0"

LEGEND:

1. POURED-IN-PLACE CONCRETE WALL AND CAP WITH 'TOP CAST' ETCH CODE NO. 05 FINISH, OR APPROVED EQUAL. ALL SIDES. ALL CAP CORNERS AND EDGES TO RECEIVE A ½" TOOLED RADIUS. SLOPE TOP OF WALL 1% MINIMUM TOWARDS PLANTER OR DIRECTION OF PAVING SURFACE FLOW.
2. CONTINUOUS EXPANSION JOINT. SEE DETAIL 3, SHEET L-2.01.
3. ADJACENT CONCRETE PAVING. SEE DETAIL 1, SHEET L-2.01 AND LANDSCAPE CONSTRUCTION PLAN, SHEET L-1.01 FOR LOCATIONS.
4. FINISH GRADE. SEE CIVIL PLANS.
5. POURED-IN-PLACE CONCRETE FOOTING WITH (4) #5 CONTINUOUS REBAR, TOP AND BOTTOM. PER STRUCTURAL ENGINEER AS SHOWN THIS DETAIL.
6. 90% MINIMUM COMPACTED, MOISTURE-CONDITIONED SUBGRADE PER GEOTECHNICAL REPORT. SEE SPECIFICATIONS.
7. 3/4" WIDE X 1/2" DEEP CONCRETE REVEAL, CONTINUOUS ACROSS FACE AND SIDES OF CONCRETE CAP. SPACED AS SHOWN ON ENLARGEMENT.
8. 3/4" WIDE x 1/2" DEEP SKATE STOPPER NOTCH. CENTERED BETWEEN REVEAL JOINTS, BOTH SIDES OF CONCRETE CAP.
9. SINGLE BLADE SAWCUT CONTROL JOINT AT REVEAL JOINTS, 1/3 DEPTH OF CONCRETE CAP.
10. SAWCUT CONTROL JOINT DOWN FACE OF WALL, BOTH SIDES PER CIVIL ENGINEERS DETAILS.
11. PROVIDE CONTINUOUS MIRADRI 860 WATERPROOF MEMBRANE AND MIRADRAIN 6200 DRAINAGE COMPOSITE BY MIRAFI INC., OR APPROVED EQUAL. INSTALL PER MANUFACTURER'S SPECIFICATIONS. CONTACT: JAMES HEIDT AND ASSOCIATES (818)248-9677.
12. PROVIDE CONTINUOUS 12" SQ. 3/4" CRUSHED AGGREGATE. PROVIDE CONTINUOUS FILTER FABRIC WRAP.
13. CONTINUOUS PVC DRAINLINE - SEE CIVIL PLANS.
14. #4 REBAR AT 16" VERTICAL, EACH FACE.
15. #4 REBAR AT 10" HORIZONTAL, EACH FACE.
16. #4 REBAR AT 24" O.C.

NOTES:

A. CONTRACTOR TO PROVIDE COLOR / FINISH SAMPLE FOR REVIEW AND APPROVAL PRIOR TO FABRICATION.

B. CONTRACTOR SHALL PROVIDE 6' X 6' MOCK OF WALL AND CAP WITH SKATEBOARD NOTCHES AND DEEP TOOL SCORE JOINTS FOR REVIEW AND APPROVAL BY LANDSCAPE ARCHITECT PRIOR TO CONSTRUCTION.

C. CONTRACTOR SHALL PROVIDE DEEP TROWEL SCORE JOINTS ACROSS FACE AND TOP OF WALL WHERE SHOWN ON PLANS AND AT ALL CORNER CONDITIONS, TYPICAL.

D. SEE GEOTECHNICAL REPORT (PAVEMENT RECOMMENDATIONS) FOR CONCRETE TYPE AND STRENGTH.

2 POURED-IN-PLACE CONCRETE PLANTER LOW WALL

LEGEND:

1. 8' PERIMETER CONCRETE BLOCK WALL. SEE DETAIL 6, SHEET L-2.01 AND CONSTRUCTION PLAN, SHEET L-1.02 FOR LOCATIONS.
2. POURED-IN-PLACE CONCRETE CAP ON BLOCK WALL. SEE DETAIL 6, SHEET L-2.01.
3. CONCRETE BLOCK WALL FOOTING. SEE DETAIL 6, SHEET L-2.01.
4. 10" SHADE STRUCTURE POST. SEE USA SHADE SHADE STRUCTURE ENGINEERING PLANS AND DETAILS, SHEET L-2.12 AND L-2.16.
5. 2'-6" DIA. POURED-IN-PLACE CONCRETE SHADE STRUCTURE FOOTING TO OCCUR BELOW CONCRETE BLOCK WALL FOOTING. SEE USA SHADE SHADE STRUCTURE ENGINEERING PLANS, SHEETS L-2.13 AND L-2.17, FOR DEPTH AND REINFORCEMENT. SEE STRUCTURAL CALCULATIONS PREPARED BY STATE OF CALIFORNIA LICENSED STRUCTURAL ENGINEER.
6. 17" SQ. BASE PLATE. SEE SEE USA SHADE DETAIL, SHEETS L-2.13 AND L-2.17.
7. SIX 1-1/4" X 36" ANCHOR BOLTS. HEAVY HEX. NUTS (3), FLAT WASHER (2) LOCK WASHER (F1554 GR.55 GALVANIZED). SEE USA SHADE DETAIL, SHEETS L-2.13 AND L-2.17.
8. 90% MINIMUM COMPACTED, MOISTURE-CONDITIONED SUBGRADE PER GEOTECHNICAL REPORT. SEE SPECIFICATIONS.
9. FINISH GRADE. SEE CIVIL PLANS.
10. ADJACENT CONCRETE PAVING PER DETAIL 2, SHEET L-2.01.

NOTES:

A. VERIFY FIELD CONDITIONS PRIOR TO CONSTRUCTION.

B. CONTRACTOR TO PROVIDE COLOR / FINISH SAMPLE FOR REVIEW AND APPROVAL PRIOR TO FABRICATION.

C. SEE GEOTECHNICAL REPORT (PAVEMENT RECOMMENDATIONS) FOR CONCRETE TYPE AND STRENGTH.

D. CAISSON AND SHADE STRUCTURE SHALL BE ERECTED PRIOR TO THE WALL FOOTING.

E. SHADE STRUCTURE AND FOOTING DESIGN SHALL IMPART OR TRANSFER NO LOADS OR FORCES ON TO ADJACENT CONSTRUCTIONS. (I.E. WALL FOOTING, WALL CAP, ETC.)

1 CONCRETE MASONRY BLOCK PERIMETER WALL AT SHADE STRUCTURES

DIGALERT
DIAL TOLL FREE
1-800-422-4133
AT LEAST TWO DAYS
BEFORE YOU DIG
UNDERGROUND SERVICE ALERT OF SOUTHERN CALIFORNIA

BASIS OF BEARINGS:

BEARINGS SHOWN HEREON ARE BASED ON THE CENTERLINE OF 162 ND STREET (FORMERLY MARKET STREET) BEING N 89° 55' 30" E SHOWN ON TRACT NO. 10901, M.B. 254/31-32

BENCHMARK:

THE CITY OF GARDENA BENCHMARK NO. 5D-15 ELEV. = 43.508

CONSULTANT:

Shimaji & Lascola, Inc.
Structural Engineers
23862 Bircher Drive
Lake Forest, CA 92630
949 770-9967

REGISTERED PROFESSIONAL ENGINEER
No. 3749
EXP. 12-31-23
STRUCTURAL
STATE OF CALIFORNIA

PREPARED UNDER THE SUPERVISION OF:

RJM DESIGN GROUP
31591 Camino Capistrano
San Juan Capistrano, CA 92675
www.RJMdesigngroup.com
[949] 493-2690 fax
[949] 493-2600 phone

REGISTERED LANDSCAPE ARCHITECT
STATE OF CALIFORNIA
05/30/2023
Expiration Date
06/30/2023

REVISIONS

NO.	DESCRIPTION	DATE	APPROVED
1	90% CD SUBMITTAL	12/15/2022	
2	100% CD SUBMITTAL	05/01/2023	
3	FINAL SUBMITTAL	10/02/2023	

CITY OF GARDENA
DEPARTMENT OF PUBLIC WORKS - ENGINEERING

CONSTRUCTION DETAILS

COMMUNITY AQUATICS & SENIOR CENTER

L-2.02

	INITAL	DATE
DESIGNED BY	EC	11/14/2022
DRAWN BY	TF	06/20/2023
CHECKED BY	EC	10/02/2023

APPROVED BY:

DATE

DIRECTOR OF PUBLIC WORKS

SHT. 17 OF 195

DWG. NO. S-2606

LEGEND:

1. 7"x10" PHOTOLUMINESCENT ALUMINUM EXIT SIGN, MODEL #NHE-6739.
2. 7"x10" PHOTOLUMINESCENT ALUMINUM EMERGENCY EXIT SIGN, MODEL #NHE-6730.
3. 6"x15" PHOTOLUMINESCENT ALUMINUM EXIT WITH LEFT ARROW SIGN, MODEL #NHE-18669.
4. 6"x15" PHOTOLUMINESCENT ALUMINUM EXIT WITH RIGHT ARROW SIGN, MODEL #NHE-18668.

NOTES:

A. SIGNAGE TO BE MOUNTED TO ENSURE THAT CENTER OF LETTERING / SIGNAGE SET AT 60" ABOVE FINISHED SURFACE OF CONCRETE BELOW FENCE / GATE / DOOR.
B. ALL SIGNS AVAILABLE FROM COMPLIANCE SIGNS, (800) 578-1245, OR APPROVED EQUAL.

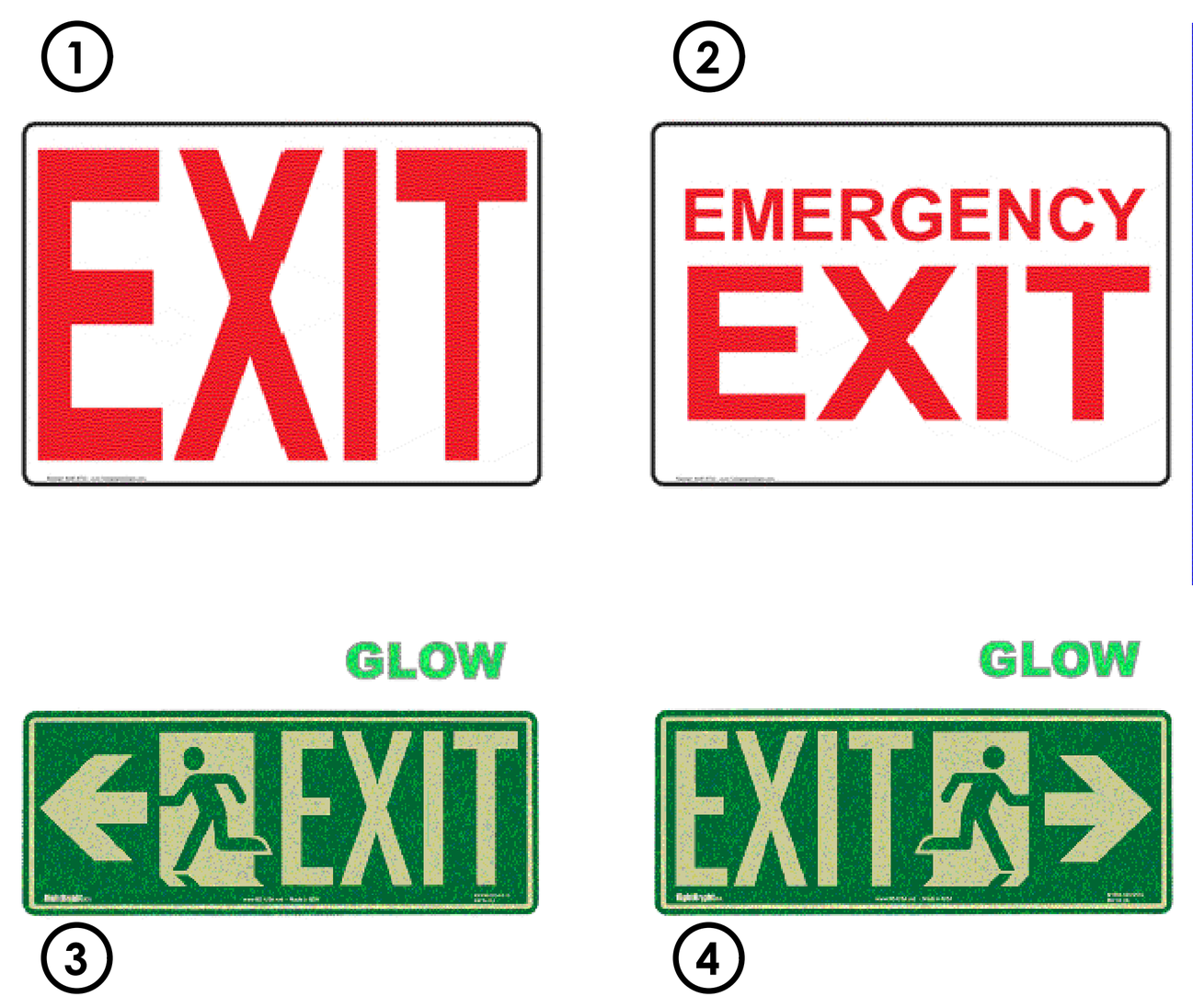

4 EXIT / EMERGENCY EXIT SIGNAGE

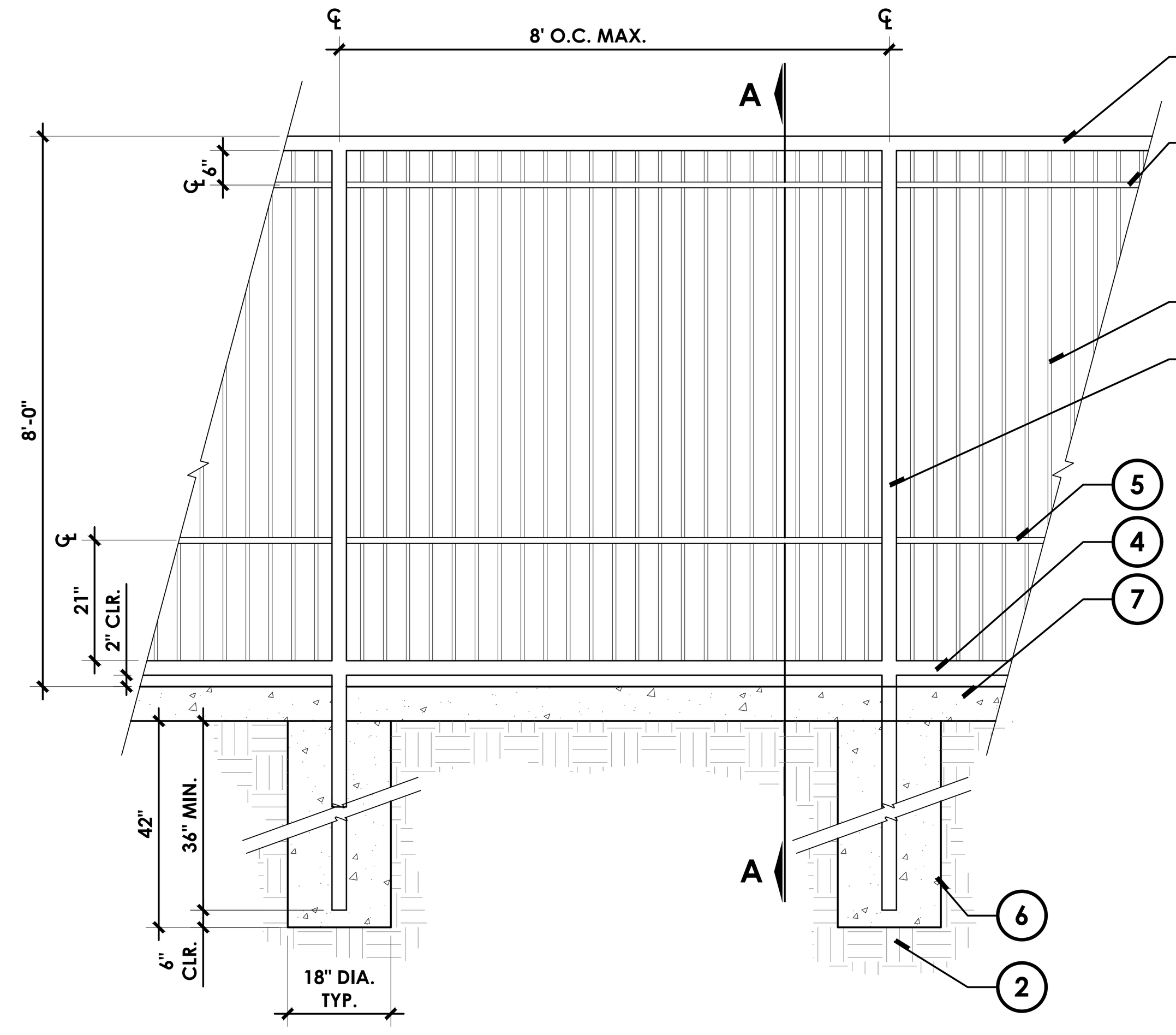

ELEVATION - FENCING
SCALE: 1/2" = 1'-0"

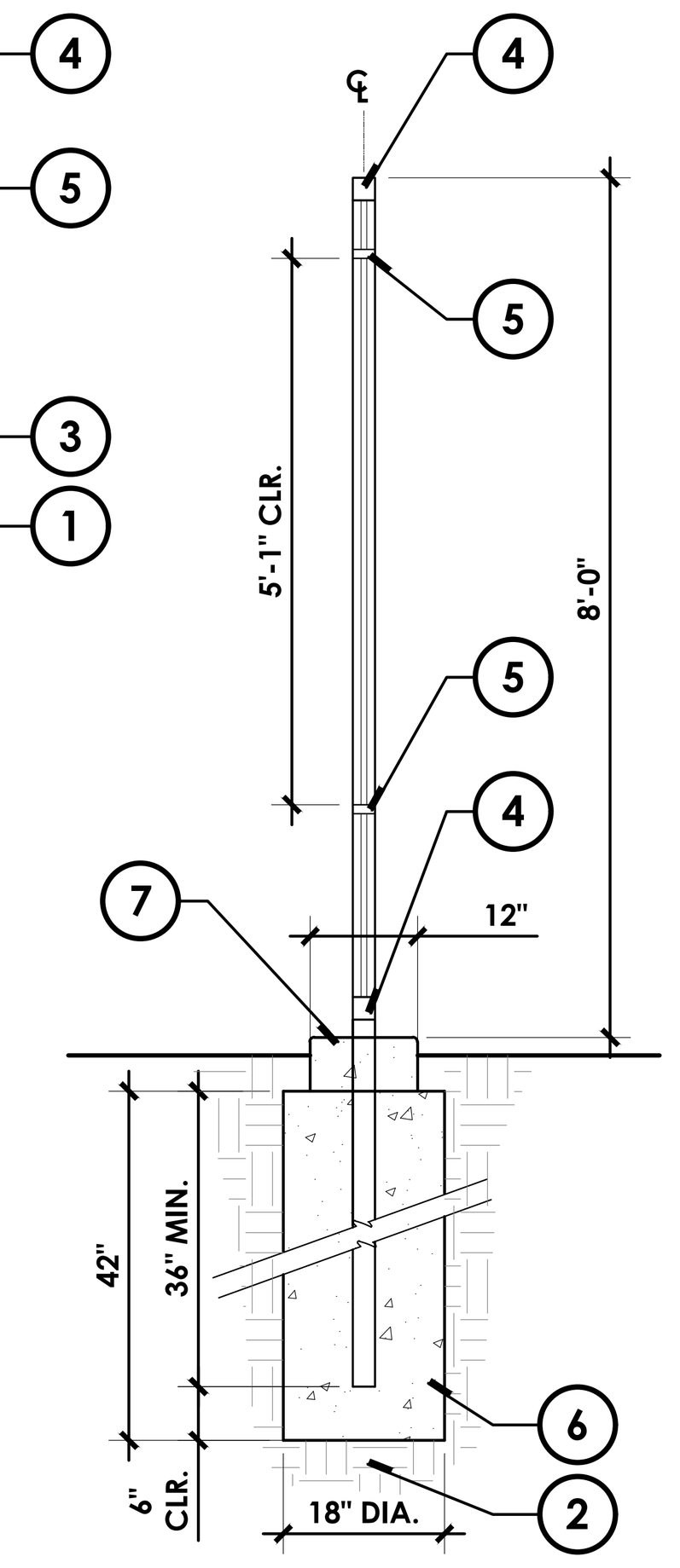

SECTION 'A-A'
SCALE: 1/2" = 1'-0"

LEGEND:

1. 2-½"x2-½"x³⁄₁₆" SQ. TUBULAR STEEL FENCE POST. SPACE AT 8'-0" O.C. MAX.
2. 90% MINIMUM COMPACTED, MOISTURE-CONDITIONED SUBGRADE PER GEOTECHNICAL REPORT. SEE SPECIFICATIONS.
3. 5/8" SQ. STEEL TUBING PICKETS AT 4" O.C. (16 GAUGE).
4. 2-½"x2-½"x³⁄₁₆" SQ. TUBULAR STEEL TOP AND BOTTOM RAIL.
5. 1"x2-½" TUBULAR STEEL MID RAILS AS INDICATED.
6. CONCRETE FOOTING PER STRUCTURAL ENGINEER, AS SHOWN THIS DETAIL.
7. 12" WIDE MOW CURB BENEATH TUBULAR STEEL FENCE. SEE DETAIL 3, SHEET L-2.01.

NOTES:

A. ALL FENCE MEMBERS TO BE 11 GAUGE UNLESS OTHERWISE NOTED.
B. CONTRACTOR TO PROVIDE SHOP DRAWING OF PROPOSED FENCING FOR OWNER'S AUTHORIZED REPRESENTATIVE'S REVIEW AND APPROVAL PRIOR TO FABRICATION.
C. WELDING: BEVEL ALL MEMBERS PRIOR TO WELDING. ALL WELDS SHALL BE CONTINUOUS AND GROUND SMOOTH.
D. FABRICATION SHALL BE PER FIELD MEASUREMENTS CONDUCTED BY CONTRACTOR.
E. CONTRACTOR TO PROVIDE SCALED SHOP DRAWING OF PROPOSED FENCING GATE HARDWARE, HINGES, LOCKS, ETC. FOR OWNER'S AUTHORIZED REPRESENTATIVE'S REVIEW AND APPROVAL PRIOR TO FABRICATION.
F. ALL TUBULAR STEEL FENCING SHALL RECEIVE THE FOLLOWING APPLICATIONS TO ALL TUBULAR MEMBERS: SURFACE PREPARATION: ZINC THERMAL SPRAYED METALIZED FINISH (2 MIL MINIMUM) AS PROVIDED BY ZINC NATION OR APPROVED EQUAL. SEE SPECIFICATIONS. CONTACT: WHITNEY BLAKESLEE (714) 239-6190. FINISH: TNEMEC COATING PER SPECIFICATIONS, OR APPROVED EQUAL. COLOR: 'DOVE GRAY' (38GR) BY TNEMEC. FINAL COLOR TO BE SELECTED & APPROVED BY CITY. CONTACT: DUSTIN KAATZ (310) 637-2363.
G. CONTRACTOR TO INSTALL MOCK-UP OF 16 LINEAR FEET OF TUBULAR STEEL FENCE FOR REVIEW & APPROVAL BY OWNER'S REPRESENTATIVE PRIOR TO COMPLETE INSTALLATION.

2 TUBULAR STEEL FENCE

98-F/99-F Rim exit device





98-F and 99-F Rim fire exit devices for all types of single doors up to 4' x 10' (1219mm x 3048mm) or 8' x 10' (2438mm x 3048mm) double doors with 9954 or 9854 mullion. UL listed for fire exit hardware. See page 76 for detailed information on UL listed fire exit hardware label and door opening size information. Devices are ANSI A156.3 – 2014 Grade 1. The 98-F device has a smooth mechanism case and the 99-F device has a grooved case. The rim device is non-handed except when the following device options are used: -2 (double cylinder) or SS (signal switch). See opposite page for available outside trim and device functions.

Finishes – US3, US3A, US4, US4A, US10, US26, US26D, US26D-AM Antimicrobial, US28, 313, 315 & 643E. US15 and US32D available with 98 Series only.

IMAGE FOR REFERENCE ONLY
SCALE: N.T.S.



DOVE GRAY
38GR
RGB: 189,187,183

IMAGE FOR REFERENCE ONLY
SCALE: N.T.S.

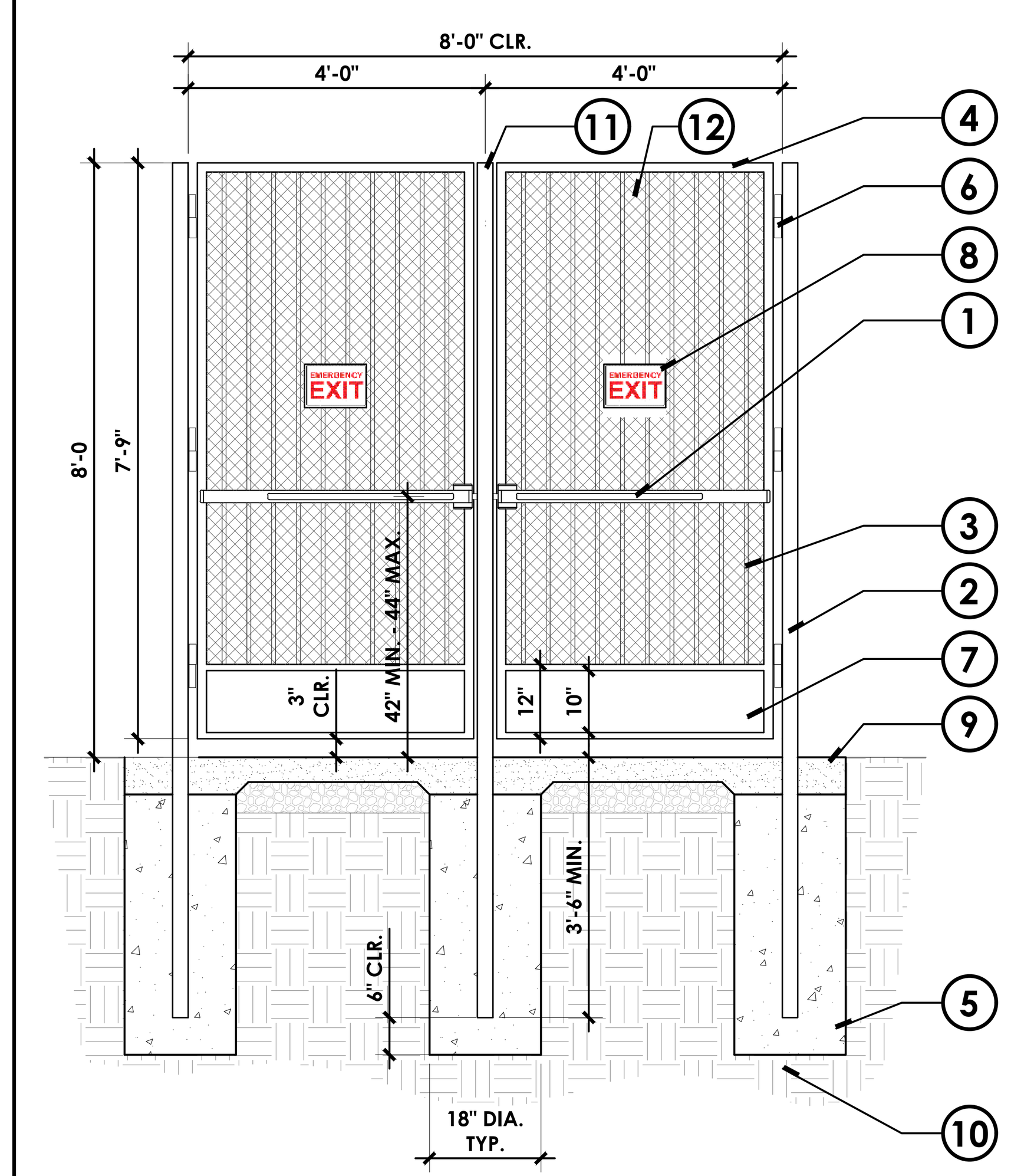

ELEVATION - DOUBLE-SWING TUBULAR STEEL GATE
SCALE: 1/2"=1'-0"

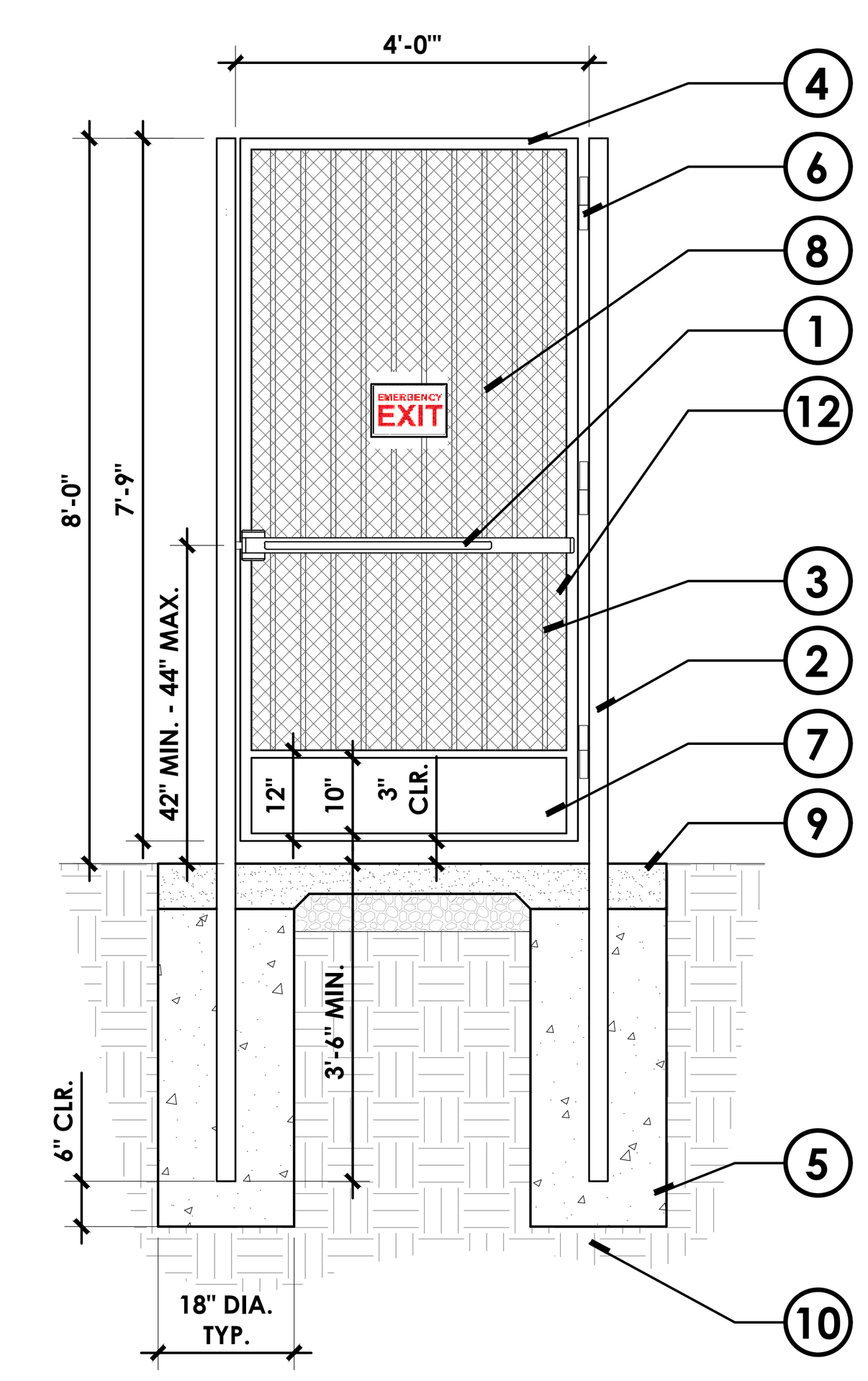

ELEVATION - SINGLE-SWING TUBULAR STEEL GATE
SCALE: 1/2"=1'-0"

LEGEND:

1. 'VON DUPRIN' PANIC BAR DEVICE (SELF-LATCHING), 98-F RIM FIRE EXIT DEVICE, MODEL #98L-F-US28, (L-LEVER, F-FIRE EXIT DEVICE, US28-ANODIZED ALUMINUM FINISH). DISTRIBUTED BY INGERSOLL RAND SECURITY TECHNOLOGIES, (626)359-5555, OR APPROVED EQUAL. MOUNT PANIC BAR TO 5" WIDE x ⅛" THICK x GATE WIDTH STEEL BAR RACKING WELDED TO GATE. INSTALL PER MANUFACTURER'S SPECIFICATIONS.
2. 2½"X2½"X¼" TUBULAR STEEL GATE POST, TYP.
3. 5/8" SQ. TUBULAR STEEL PICKETS AT 4" O.C. (14 GAUGE)
4. 2-½"X2-½"X¼" TUBULAR STEEL GATE FRAME.
5. CONCRETE FOOTING AND REINFORCEMENT PER STRUCTURAL ENGINEER, AS SHOWN THIS DETAIL.
6. HEAVY DUTY SPRING LOADED GATE HINGES (SELF-CLOSING) - 3 HINGES PER GATE BY: JANSEN ORNAMENTAL SUPPLY CO., MODEL NO. BHRD5, OR APPROVED EQUAL. (800) 423-4494. SECURE PER MANUFACTURER'S SPECIFICATIONS.
7. INSTALL 16 GA. GALVANIZED KICK PLATE ON PUSH SIDE OF GATE.
8. GLOW-IN-DARK ALUMINUM EXIT SIGN, TO BE MOUNTED ON PUSH SIDE OF GATE. SIGN TO BE CALLOUT #2, MODEL #NHE-6739, PER DETAIL 4, THIS SHEET.
9. ADJACENT CONCRETE PAVING. SEE DETAIL 1 & 2, SHEET L-2.01 AND LANDSCAPE PLANS SHEETS L-1.01 & L-1.02 FOR LOCATIONS.
10. 90% MINIMUM COMPACTED, MOISTURE-CONDITIONED SUBGRADE PER GEOTECHNICAL REPORT.
11. 2½"X2½"X¼" TUBULAR STEEL MULLION POST. MULLION TO RECEIVE ½" STRIKE FOR PANIC BAR BY VON DUPRIN, MODEL# 9954.
12. EXPANDED METAL MESH WITH 3/4" OPENINGS (13 GAUGE). WELD TO INSIDE OF GATE WITH DOUBLE 1" X 1/8" THICK STEEL FRAME.

NOTES:

A. ALL TUBULAR STEEL FENCING SHALL RECEIVE THE FOLLOWING APPLICATIONS TO ALL TUBULAR MEMBERS: SURFACE PREPARATION: ZINC THERMAL SPRAYED METALIZED FINISH (2 MIL MINIMUM) AS PROVIDED BY ZINC NATION, OR APPROVED EQUAL. SEE SPECIFICATIONS. CONTACT: WHITNEY BLAKESLEE (714) 239-6190. FINISH: TNEMEC COATING, OR APPROVED EQUAL, PER SPECIFICATIONS. COLOR: 'DOVE GRAY' (38GR) BY TNEMEC. FINAL COLOR TO BE SELECTED & APPROVED BY CITY. CONTACT: DUSTIN KAATZ (310) 637-2363.
B. CONTRACTOR TO PROVIDE SCALED SHOP DRAWINGS OF PROPOSED GATES AND HARDSCAPE FOR OWNER'S AUTHORIZED REPRESENTATIVE'S REVIEW AND APPROVAL PRIOR TO FABRICATION.
C. GATES SHALL BE EQUIPPED WITH SELF-CLOSING AND SELF-LATCHING DEVICES, PER THIS DETAIL.
D. GATES SHALL BE CAPABLE OF BEING LOCKED DURING TIMES WHEN THE POOL IS CLOSED.

1 TUBULAR STEEL GATE

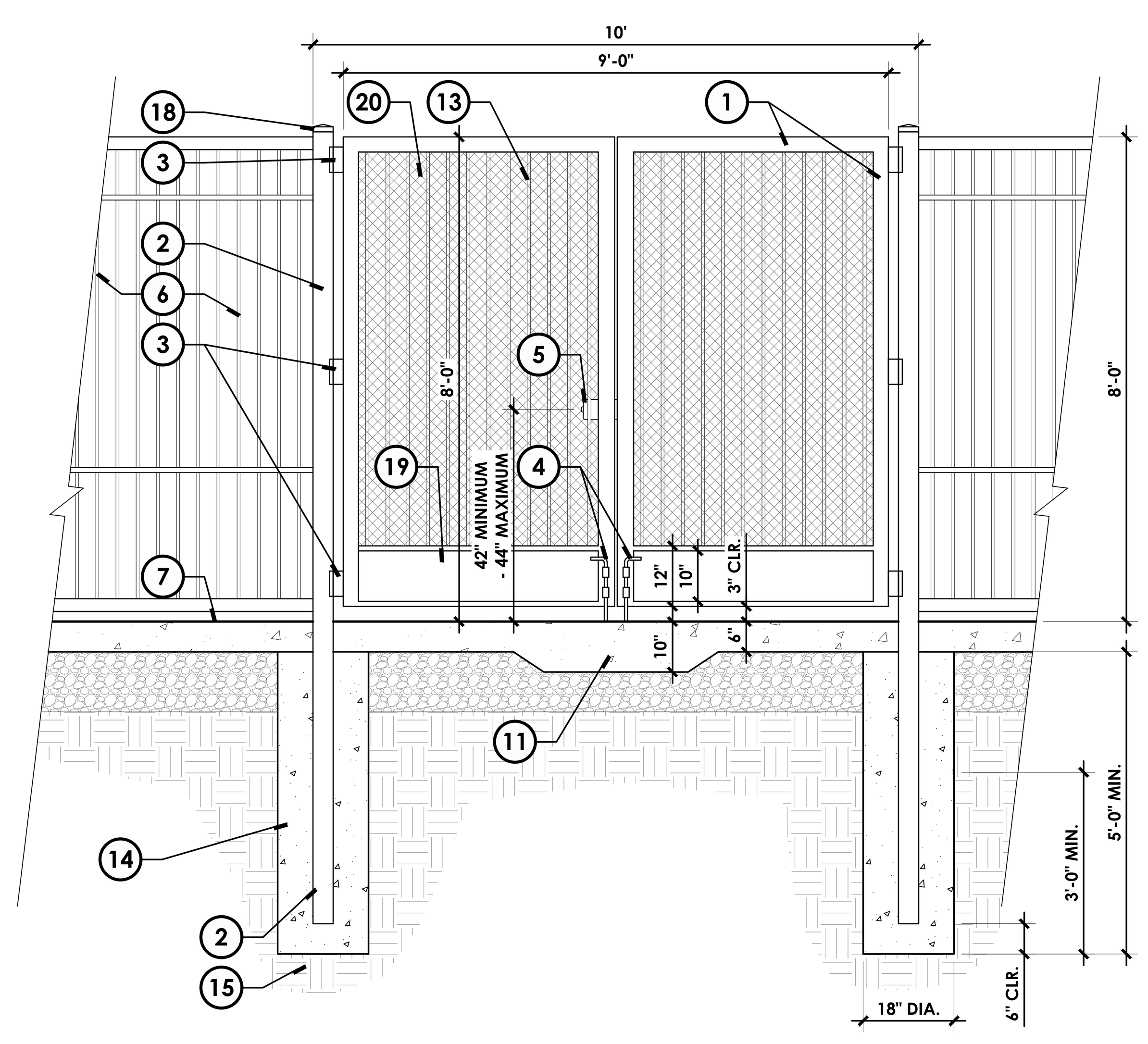

ELEVATION - MAINTENANCE ACCESS GATE (VIEW EXITING FACILITY)
SCALE: 1/2" = 1'-0"

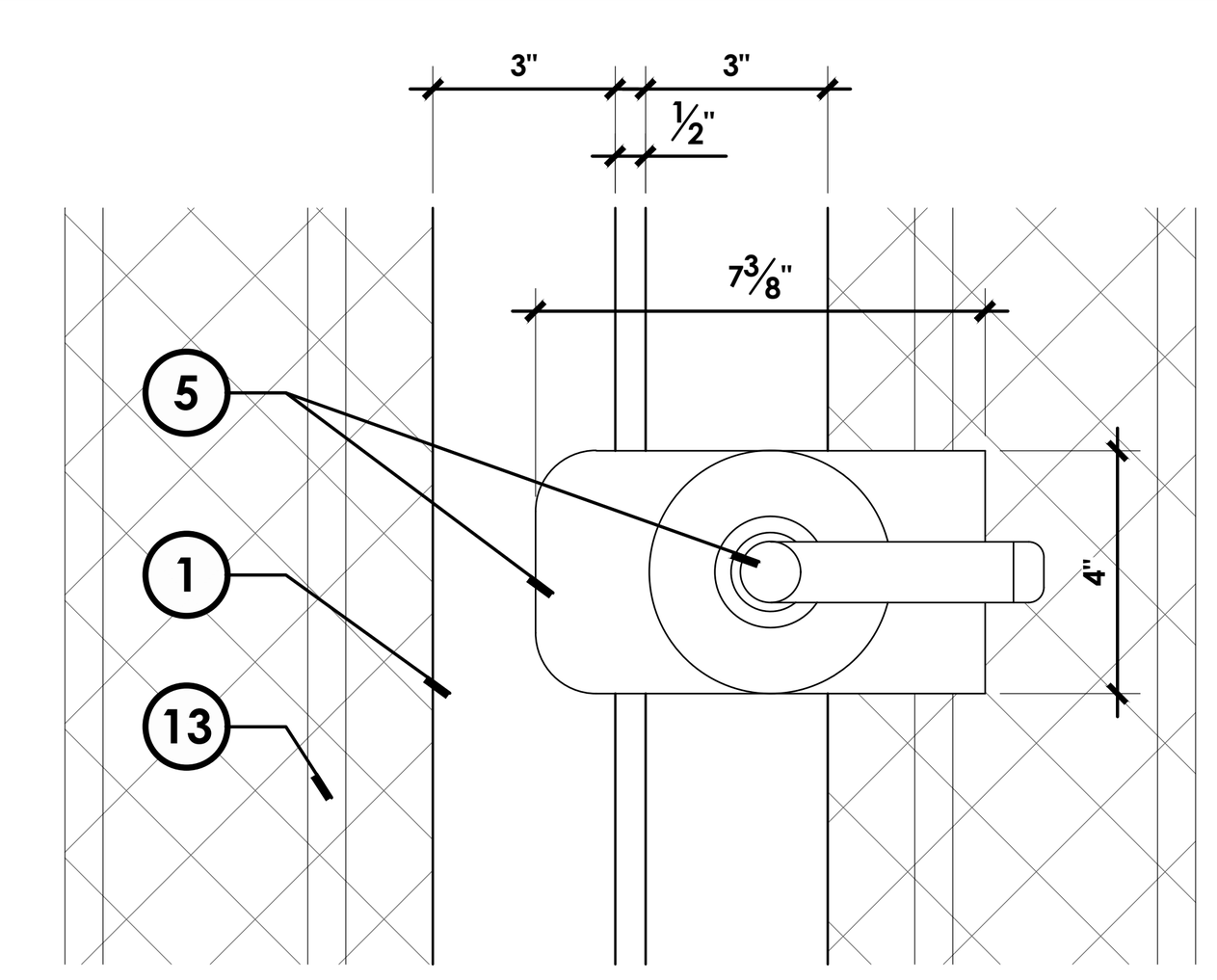

GATE LOCK SECTION ENLARGEMENT 'A' (VIEW ENTERING FACILITY)
SCALE: 3" = 1'-0"

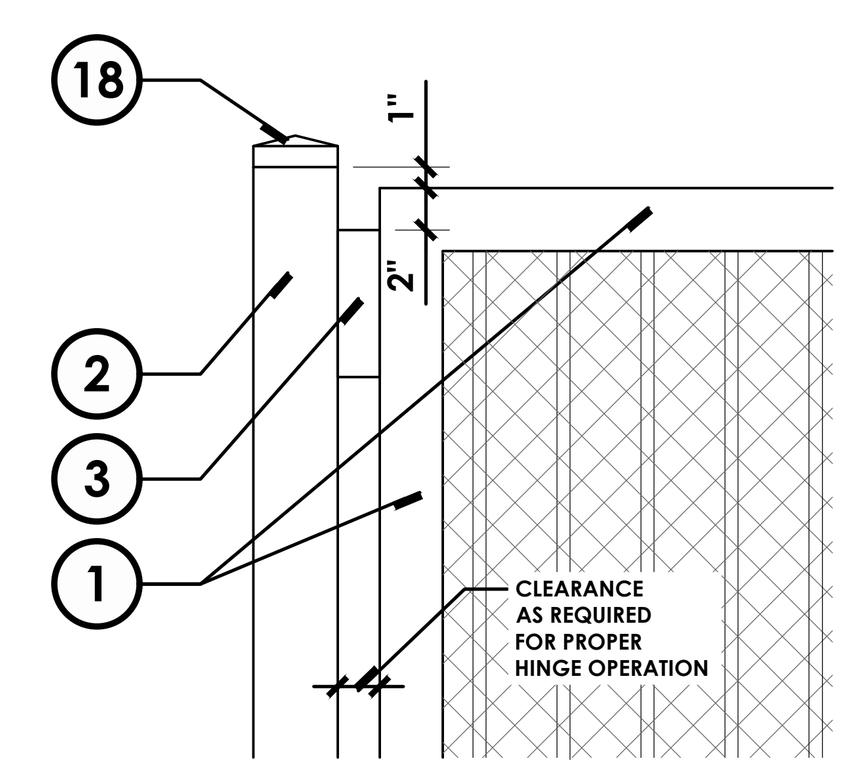

GATE HINGE ENLARGEMENT 'B'
SCALE: 1" = 1'-0"

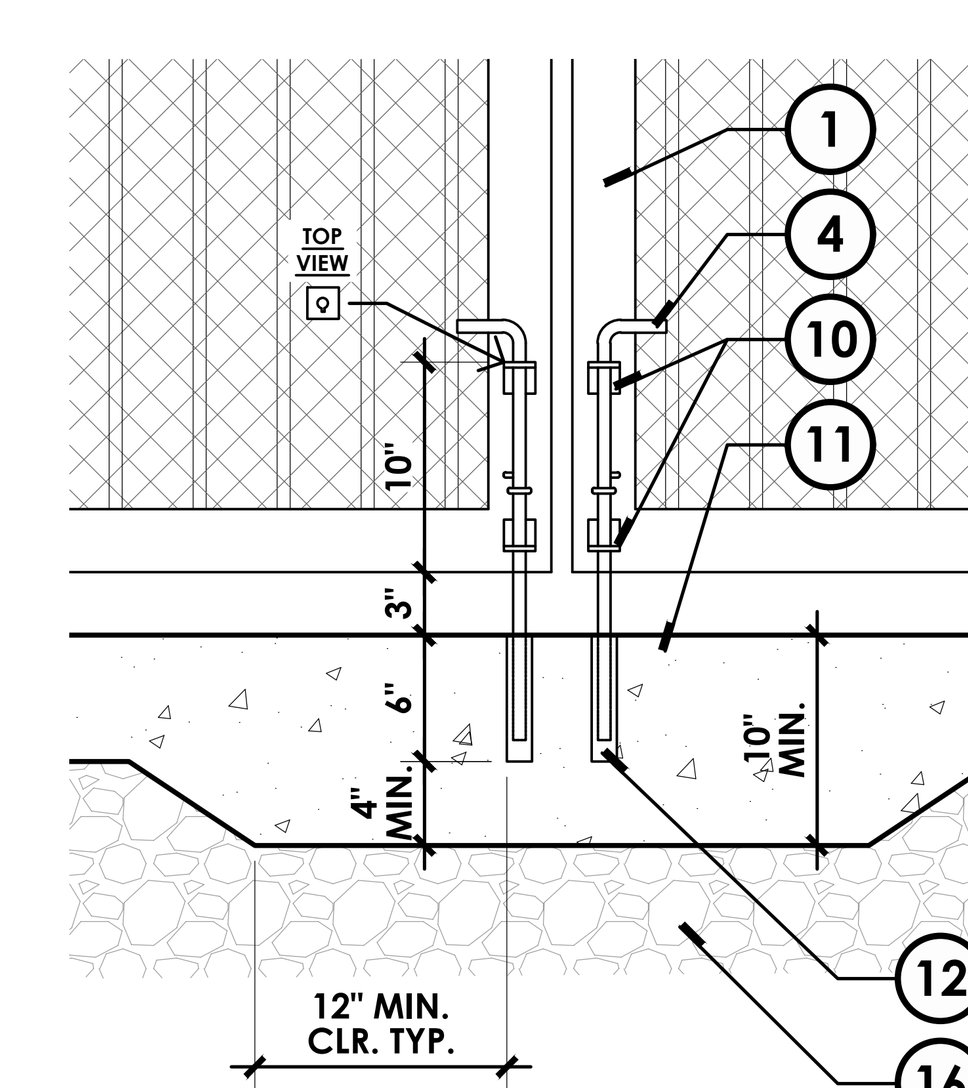

CANE BOLT SECTION 'C'
SCALE: 1" = 1'-0"

LEGEND:

1. GATE FRAME, 3" O.D. WELDED, GALV. STEEL PIPE, SCHEDULE 40. SEE NOTE 'D' BELOW.
2. HSS 4" x 4" x $\frac{3}{16}$" TUBULAR STEEL GATE POST. FILL POST WITH CONCRETE. SEE NOTE 'D' BELOW.
3. HEAVY DUTY SPRING LOADED GATE HINGES (SELF-CLOSING) - 3 PER GATE FRAME. 7" ROUND BARREL HINGE W/ GREASED FITTING & STAINLESS STEEL PIN, BY JANSEN ORNAMENTAL SUPPLY CO. OR APPROVED EQUAL. MODEL: BHRD5. PHONE: (800) 423-4494. LOCATE TOP, MIDDLE, & BOTTOM OF GATE. SECURE PER MANUFACTURER'S SPECIFICATIONS. SEE ENLARGEMENT 'B'.
4. CANE BOLT. ½" DIA. x 18" LONG W/ ¼" LONG x ³⁄₁₆" STEEL ROD WELDED TO CANE BOLT. SEE SECTION ENLARGEMENT 'C'.
5. FALCON T SERIES ADA LOCKSET (SELF-LATCHING). DISTRIBUTED BY INGERSOLL RAND SECURITY TECHNOLOGIES, (626)359-5555. MOUNT TO 4" WIDE SQ. STEEL HARDWARE ENCLOSURE WELDED TO GATE FRAME. INSTALL 42" MINIMUM - 44" MAXIMUM ABOVE FINISHED GRADE. INSTALL PER MANUFACTURER'S SPECIFICATIONS. SEE ENLARGEMENT 'A'.
6. ADJACENT TUBULAR STEEL FENCING. SEE DETAIL 2, THIS SHEET.
7. FINISH GRADE. SEE PLANS.
8. PIPE SLEEVES AS DIMENSIONED, WELDED TO GATE FRAME FOR FULL LENGTH OF PIPE.
9. ¾" DIAMETER ROD.
10. (4) 1½"x1½"x1½" LONG ANGLE PUNCH ⅝" HOLE FOR CANE BOLT & SLOT AT TOP ANGLE.
11. VEHICULAR CONCRETE PAVING. CONCRETE SHALL BE 10" MINIMUM DEPTH AT CANE BOLT LOCATION TO ALLOW FOR 6" DEEP PIPE SLEEVES, PER LEGEND ITEM 12 BELOW. SEE ENLARGEMENT 'C' AND DETAIL 1, SHEET L-2.01.
12. 6" DEEP ⅞" DIA. PIPE SLEEVE SET IN CONCRETE.
13. 5/8" SQ. TUBULAR STEEL PICKETS AT 4" O.C. (14 GAUGE)
14. GATE POST FOOTING. SIZE AND REINFORCEMENT PER STRUCTURAL ENGINEER, AS SHOWN THIS DETAIL. COORDINATE INSTALLATION OF POST FOOTING WITH ADJACENT CONCRETE WALL FOOTING. SEE DETAIL 1, SHEET L-2.01.
15. COMPACTED, MOISTURE-CONDITIONED SUBGRADE PER GEOTECHNICAL REPORT.
16. 6" CRUSHED AGGREGATE BASE. SEE DETAIL 1, SHEET L-2.01.
17. ADJACENT TUBULAR STEEL FENCING. SEE DETAIL 2, THIS SHEET.
18. POST CAP, WELDED AT TOP OF POST AFTER ALL GATE HARDWARE HAS BEEN INSTALLED, BY JANSEN ORNAMENTAL SUPPLY CO., OR APPROVED EQUAL. MODEL: PC4. PHONE: (800) 423-4494.
19. INSTALL 16 GA. GALVANIZED KICK PLATE.
20. EXPANDED METAL MESH WITH 3/4" OPENINGS (13 GAUGE). WELD TO INSIDE OF GATE WITH DOUBLE 1" X 1/8" THICK STEEL FRAME.

NOTES:

A. BEVEL ALL MEMBERS PRIOR TO WELDING. ALL WELDS SHALL BE CONTINUOUS AND GROUND SMOOTH.
B. FABRICATION SHALL BE PER FIELD MEASUREMENTS CONDUCTED BY CONTRACTOR.
C. CONTRACTOR TO PROVIDE SCALED SHOP DRAWINGS OF PROPOSED GATES AND HARDSCAPE FOR OWNER'S AUTHORIZED REPRESENTATIVE'S REVIEW AND APPROVAL PRIOR TO FABRICATION.
D. ALL EXPOSED METAL SHALL RECEIVE THE FOLLOWING APPLICATIONS TO ALL MEMBERS: SURFACE PREPARATION: ZINC THERMAL SPRAYED METALIZED FINISH (2 MIL MINIMUM) AS PROVIDED BY ZINC NATION OR APPROVED EQUAL. SEE SPECIFICATIONS. CONTACT: WHITNEY BLAKESLEE (714) 239-6190. FINISH: TNEMEC COATING, OR APPROVED EQUAL PER SPECIFICATIONS. 'DOVE GRAY' (38GR) BY TNEMEC. FINAL COLOR TO BE SELECTED & APPROVED BY CITY. CONTACT: DUSTIN KAATZ (310) 637-2363.
E. CONCRETE AND REINFORCING INFORMATION INDICATED HEREIN, ARE MINIMUMS AND ARE BASED ON INFORMATION CONTAINED IN THE PROJECT GEOTECHNICAL REPORT AVAILABLE AT THE TIME OF PREPARATION OF THESE DOCUMENTS. PRIOR TO START OF CONSTRUCTION, THE CONTRACTOR SHALL OBTAIN AND REVIEW THE RECOMMENDATIONS CONTAINED IN THE LATEST AND FINAL APPROVED GEOTECHNICAL REPORT SPECIFIC TO THIS PROJECT. THE CONTRACTOR SHALL PROVIDE ADDITIONAL CONCRETE, REINFORCING, SUB-BASE MATERIALS, SUB-BASE PREPARATION SUCH AS COMPACTION, MOISTURE CONDITIONING, ETC., AS MAY BE REQUIRED BY THE LATEST AND FINAL APPROVED PROJECT GEOTECHNICAL REPORT.
F. GATES SHALL BE EQUIPPED WITH SELF-CLOSING AND SELF-LATCHING DEVICES, PER THIS DETAIL.
G. GATES SHALL BE CAPABLE OF BEING LOCKED DURING TIMES WHEN THE POOL IS CLOSED.

3 MAINTENANCE ACCESS GATE

DIGALERT
DIAL TOLL FREE
1-800-422-4133
AT LEAST TWO DAYS BEFORE YOU DIG
UNDERGROUND SERVICE ALERT OF SOUTHERN CALIFORNIA

BASIS OF BEARINGS:
BEARINGS SHOWN HEREON ARE BASED ON THE CENTERLINE OF 162 ND STREET (FORMERLY MARKET STREET) BEING N 89° 55' 30" E SHOWN ON TRACT NO. 10901, M.B. 254/31-32

BENCHMARK:
THE CITY OF GARDENA BENCHMARK NO. 5D-15 ELEV. = 43.508

CONSULTANT:

Shimaji & Lascola, Inc.
Structural Engineers
23682 Birtcher Drive
Lake Forest, CA 92630
949 770-9967

REGISTERED PROFESSIONAL ENGINEER · JAMES J. LASCOLA · No. 3149 · EXP. 12-31-23 · STRUCTURAL · STATE OF CALIFORNIA

PREPARED UNDER THE SUPERVISION OF:

RJM DESIGN GROUP
31591 Camino Capistrano
San Juan Capistrano, CA 92675
www.RJMdesigngroup.com
[949] 493-2690 fax
[949] 493-2600 phone

LICENSED LANDSCAPE ARCHITECT · Signature · 09/30/2025 Renewal Date · 10/04/2023 Date · STATE OF CALIFORNIA

REVISIONS

NO.	DESCRIPTION	DATE	APPROVED
1	90% CD SUBMITTAL	12/15/2022	
2	100% CD SUBMITTAL	05/01/2023	
3	FINAL SUBMITTAL	10/02/2023	

CITY OF GARDENA
DEPARTMENT OF PUBLIC WORKS - ENGINEERING
CONSTRUCTION DETAILS
COMMUNITY AQUATICS & SENIOR CENTER
L-2.03

	INITAL	DATE
DESIGNED BY	EC	11/14/2022
DRAWN BY	TP	06/20/2023
CHECKED BY	EC	10/02/2023

APPROVED BY:
DATE DIRECTOR OF PUBLIC WORKS
SHT. 18 OF 195 DWG. NO. 5-2606

FILE PATH: P:\301 GARDENA\301-01 GARDENA AQUATIC & SENIOR CENTER\301-01-CD\301-01-CD-L201.DWG
PLOT TIME: 06/30/2023 9:00 AM

model 3612F

ADA Filtered Stainless Steel Bottle Filler and Drinking Fountain

FEATURES & BENEFITS

ADA COMPLIANCE
ADA-compliant bottle filling station and dual-height high-low drinking fountain required for wheelchair use, and for the standing person.

FRONT APPROACH
All three water stations face frontward and the overall footprint needed is only 73 inches wide, saving 33% of the hardscape required for access compliance. This also allows the fountain to be placed with its back to within 8 inches of a wall or a fence.

BOTTLE FILLER
The ADA-compliant open design bottle filling station offers a 17" high bottle area, and open sides making this push button operated bottle filling station more accessible to users.

STAINLESS STEEL VALVES
The push-button activated valves offers the only all stainless steel valve body that is machined out of solid bar stock, is fully serviceable through the front of the push button assembly offering access to the water control cartridge and integral water supply strainer, and with front access to the water stream height adjustment for easy maintenance without having to remove the valve. Operating pressure range of 30 to 90 psi (2.1 to 6.2 bar).

BUBBLER HEAD
Polished chrome plated brass bubbler head with integral 5/8" dia. threaded shank for vandal resistant strength, and top-down access for nozzle replacement or water line service, with .45 gpm flow rate.

CONSTRUCTION
Heavy-duty stainless steel with silver powder-coated color finish, and stainless-steel drinking fountain bowls. Modular construction allows for easy replacement or rearrangement of drinking fountain bowls and bottle filler modules.

DRAIN CLEAN-OUT
Top-down access to the drain allows the fountain to be cleaned without taking the unit apart, good for outdoor settings with drain-cloggings and or leaves.

OPTIONS

Pet Fountain: Model 3670, dog bowl attachment for 3600 series pedestal fountains.

Hose Bib: Model 3660, lockable hose bib attachment for 3600 series pedestal fountains.

Installation Aid: Model MTG.3600, mounting guide for 3600 series pedestal fountains.

Freeze-Resistant Option: Model 3612FR. ADA stainless steel freeze-resistant bottle filler and dual fountain.

For more information, visit www.hawsco.com or call (888) 640-4297.



SPECIFICATIONS

Model 3612F outdoor, ADA-compliant pedestal mounted bottle filler and high-low drinking fountain shall include a heavy-duty stainless steel pedestal with matte silver powder-coating. 3000 gallon carbon block filter reduces chlorine (taste and odor) and lead, and removes 99.99% of cysts with mounting bracket, push-button operated stainless steel valves with front-accessible cartridge and flow adjustment, polished chrome-plated brass vandal-resistant shielded bubbler heads with integral 5/8" dia. threaded shank, and top-down access for nozzle and/or removable nozzles, and sensor-opening bottle filler with quick-fill 1 gpm flow rate. 100% lead-free waterways, polished chrome plated vandal-resistant waste strainers with top-down clean-out access to the drain, vandal-resistant access plates, integral mounting feet, and 1-1/2" dia waste

APPLICATIONS

The 3612F offers a solution for the changing needs of outdoor settings as well as outdoor wheel chair access, appealing to all users through accessibility and style. Ideal for schools, recreational parks, universities, and other outdoor areas where hydration facilities are needed. Model meets all current Federal Regulations for the disabled including those in the Americans with Disabilities Act, Haws manufactures drinking fountains, faucets and electric water coolers to be lead-free by all known definitions including NSF/ANSI/CAN 61-Section 9, NSF/ANSI Standards 42 & 53, NSF/ANSI/ CAN 372, California Proposition 65, and the Federal Safe Drinking Water Act. This product is compliant to California Health and Safety Code 116875 (AB 1953-2006), and NSF/ ANSI/CAN 61, G s. l.

THIS DOCUMENT IS TRUE AND CORRECT AT TIME OF PUBLICATION. CONTINUED PRODUCT IMPROVEMENTS MAKE SPECIFICATIONS AND MEASUREMENTS SUBJECT TO CHANGE WITHOUT NOTICE.

1455 KLEPPE LANE, SPARKS, NEVADA 89431
(775) 359-4712 FAX (775) 359-7424
E-MAIL: HAWS@HAWSCO.COM
WEBSITE: WWW.HAWSCO.COM

DRN	REV. KZK	BY	MODEL(S)	DWF NUMBER
CHKD	APP. KZK	ECN & QA#	3612 & 3612F	D5800011BD.D
DATE	SCALE: N.A.			REVISION
04/07	DRAWING NO.	3612		2

DISCLAIMER: Continued product improvements make specifications subject to change without notice. Check hawsco.com for the latest product information and updates.

NOTES:
1. WHEN INSTALLING THIS UNIT, LOCAL, STATE, OR FEDERAL CODES SHOULD BE ADHERED TO. INSTALL A TRAP IN THE WASTE LINE AND A SCREWDRIVER STOP IN THE SUPPLY LINE IF REQUIRED.

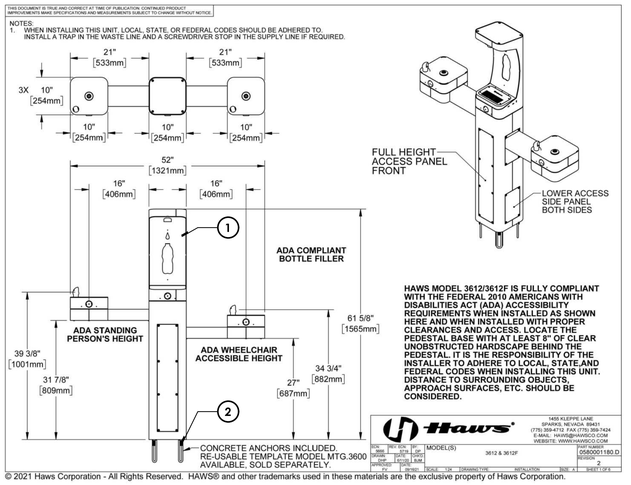

HAWS MODEL 3612/3612F IS FULLY COMPLIANT WITH THE FEDERAL 2010 AMERICANS WITH DISABILITIES ACT (ADA) ACCESSIBILITY REQUIREMENTS WHEN INSTALLED AS SHOWN HERE AND WHEN INSTALLED WITH PROPER CLEARANCES AND ACCESS. LOCATE THE PEDESTAL BASE WITH AT LEAST 8" OF CLEAR UNOBSTRUCTED HARDSCAPE BEHIND THE PEDESTAL. IT IS THE RESPONSIBILITY OF THE INSTALLER TO ADHERE TO LOCAL, STATE,AND FEDERAL CODES WHEN INSTALLING THIS UNIT. DISTANCE TO SURROUNDING OBJECTS, APPROACH SURFACES, ETC. SHOULD BE CONSIDERED.

© 2021 Haws Corporation - All Rights Reserved. HAWS® and other trademarks used in these materials are the exclusive property of Haws Corporation.

IMAGES FOR REFERENCE ONLY
SCALE: N.T.S.

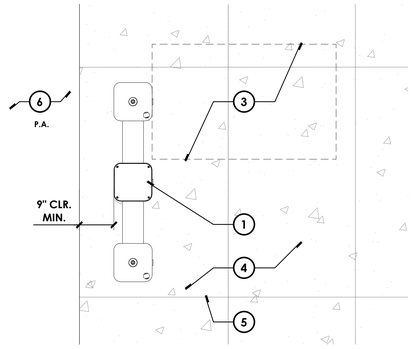

PLAN VIEW - ADA ACCESSIBLE HI-LO PEDESTAL DRINKING FOUNTAIN WITH BOTTLE FILLER
SCALE: 3/4" = 1'-0"

LEGEND:

1. **INSTALL (3) ADA ACCESSIBLE HI-LO FILTERED STAINLESS STEEL DRINKING FOUNTAIN WITH BOTTLE FILLER, NON-REFRIGERATED, BY HAWS, OR APPROVED EQUAL. MODEL# 3612F. FINISH: STAINLESS STEEL, COLOR: SILVER POWDER COAT. AVAILABLE FROM SPECIFICATION SALES. CONTACT (909) 594-7088. INSTALL 9" CLEAR FROM EDGE OF PAVEMENT/EDGE OF BUILDING, SEE CONSTRUCTION PLAN SHEET L-1.01 FOR LOCATIONS AND CIVIL GRADING AND DRAINAGE PLANS. SURFACE MOUNT PER MANUFACTURER'S RECOMMENDATIONS AND SPECIFICATIONS.**
2. **(4) CAST-IN ANCHORS SET AT 7" SQUARE SPACING. INSTALL PER MANUFACTURER'S RECOMMENDATIONS AND SPECIFICATIONS.**
3. **36"X48" CLEAR FLOOR SPACE FOR WHEELCHAIR ACCESSIBILITY.**
4. **ADJACENT CONCRETE PAVING. SEE CONSTRUCTION PLAN, SHEET L-1.01 AND DETAIL 1, SHEET L-2.01.**
5. **CONTROL JOINT. SEE DETAIL 3, SHEET L-2.01, AND LANDSCAPE PLAN SHEETS L-1.01 & L-1.02 FOR LOCATIONS.**
6. **ADJACENT PLANTING AREA. SEE PLANTING PLAN, SHEET L-5.01.**

NOTES:

- (A) **SEE CIVIL PLANS FOR LOCATION OF UTILITIES, WATER SUPPLY LINES, SEWER LINES, ETC.**
- (B) **INSTALL PER MANUFACTURER'S RECOMMENDATIONS AND SPECIFICATIONS.**
- (C) **CONTRACTOR SHALL FIELD VERIFY SUFFICIENT CLEARANCES FOR ADA PATH OF TRAVEL ARE PROVIDED PRIOR TO INSTALLATION.**
- (D) **SEE GEOTECHNICAL REPORT (PAVEMENT RECOMMENDATIONS) FOR CONCRETE TYPE AND STRENGTH.**

1 ADA PEDESTAL DRINKING FOUNTAIN WITH BOTTLE FILLER

DIGALERT
DIAL TOLL FREE
1-800-422-4133
AT LEAST TWO DAYS BEFORE YOU DIG
UNDERGROUND SERVICE ALERT OF SOUTHERN CALIFORNIA

BASIS OF BEARINGS:
BEARINGS SHOWN HEREON ARE BASED ON THE CENTERLINE OF 162 ND STREET (FORMERLY MARKET STREET) BEING N 89° 55' 30" E SHOWN ON TRACT NO. 10901, M.B. 254/31-32

BENCHMARK:
THE CITY OF GARDENA BENCHMARK NO. 5D-15 ELEV. = 43.508

CONSULTANT:

PREPARED UNDER THE SUPERVISION OF:

RJM DESIGN GROUP
31591 Camino Capistrano
San Juan Capistrano, CA 92675
www.RJMdesigngroup.com
[949] 493-2690 fax
[949] 493-2600 phone

REGISTERED LANDSCAPE ARCHITECT — STATE OF CALIFORNIA — 07/31/2025

REVISIONS

NO.	DESCRIPTION	DATE	APPROVED
1	90% CD SUBMITTAL	12/15/2022	
2	100% CD SUBMITTAL	05/01/2023	
3	FINAL SUBMITTAL	10/02/2023	

CITY OF GARDENA
DEPARTMENT OF PUBLIC WORKS - ENGINEERING
CONSTRUCTION DETAILS
COMMUNITY AQUATICS & SENIOR CENTER
L-2.04

	INITAL	DATE
DESIGNED BY	EC	11/14/2022
DRAWN BY	TP	06/20/2023
CHECKED BY	EC	10/02/2023

APPROVED BY:
DATE DIRECTOR OF PUBLIC WORKS
SHT. 19 OF 195 DWG. NO. S-2606

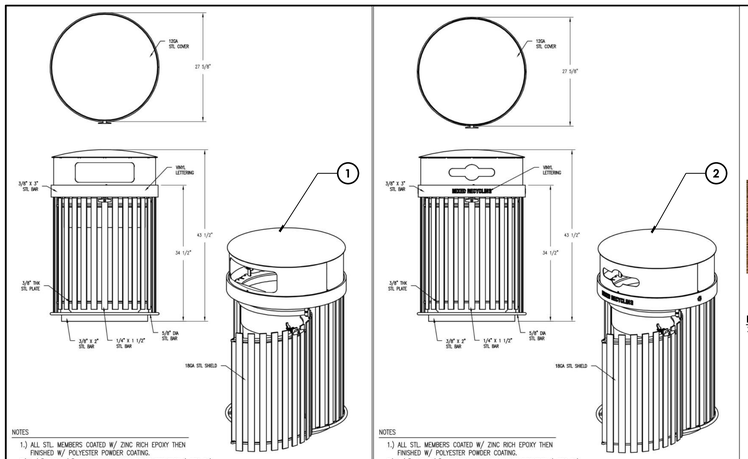

NOTES
1.) ALL STL. MEMBERS COATED W/ ZINC RICH EPOXY THEN FINISHED W/ POLYESTER POWDER COATING.
2.) 1/2" X 3 3/4" EXPANSION ANCHOR BOLTS PROVIDED (QTY 3).
3.) RECYCLING UNIT HINGE FOR REMOVAL OF 32 GAL LINER.

DuMor, Inc.	RECPTACLE	DATE DRAWN : 11/11/16 · DRAWN BY : JSB · DATE REV. : · REV. BY :	REV. A	DRAWING NUMBER 287-32SH-SO	SHEET 1 OF 2

DuMor, Inc.	RECPTACLE	DATE DRAWN : 11/11/16 · DRAWN BY : JSB · DATE REV. : · REV. BY :	REV. A	DRAWING NUMBER 287-32SH-RC0002	SHEET 1 OF 2

TEXTURED GREY

Antique Mahogany

IMAGES FOR REFERENCE ONLY
SCALE: N.T.S.

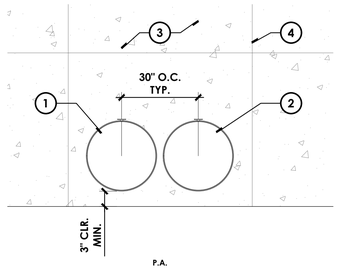

PLAN VIEW - WASTE/RECYCLING RECEPTACLES
SCALE: 1/4" = 1'-0"

LEGEND:
1. INSTALL (3) 32 GALLON WASTE RECEPTACLE WITH LINER SHIELD BY DUMOR, OR APPROVED EQUAL. MODEL# 287-32SH-SO. COLOR: TEXTURED GREY. LID OPTION: SO. HOLE SHAPE OPTION: SO. SHALL BE SUPPLIED BY REC WEST OUTDOOR PRODUCTS INC. CONTACT: DERRICK SHIMA (818) 735-3838. SEE CONSTRUCTION PLAN, SHEET L-1.01 FOR LOCATIONS. SURFACE MOUNT PER MANUFACTURER'S SPECIFICATIONS AND RECOMMENDATIONS.
2. INSTALL (3) 32 GALLON MIXED RECYCLING RECEPTACLE WITH LINER SHIELD BY DUMOR, OR APPROVED EQUAL. MODEL# 287-32SH-RC0002. COLOR: TEXTURED GREY. LID OPTION: RC2. HOLE SHAPE OPTION: RC2. SHALL BE SUPPLIED BY REC WEST OUTDOOR PRODUCTS INC. CONTACT: DERRICK SHIMA (818) 735-3838. SEE CONSTRUCTION PLAN, SHEET L-1.01 FOR LOCATIONS. SURFACE MOUNT PER MANUFACTURER'S SPECIFICATIONS AND RECOMMENDATIONS.
3. ADJACENT HARDSCAPE. SEE CONSTRUCTION PLAN, SHEET L-1.01 AND DETAIL 1, SHEET L-1.01.
4. CONTROL JOINT PER PLANS AND DETAIL 2, SHEET L-2.01.

NOTE:
A. INSTALL RECEPTACLES PER MANUFACTURER'S RECOMMENDATIONS AND SPECIFICATIONS.

3 WASTE / RECYCLING RECEPTACLES

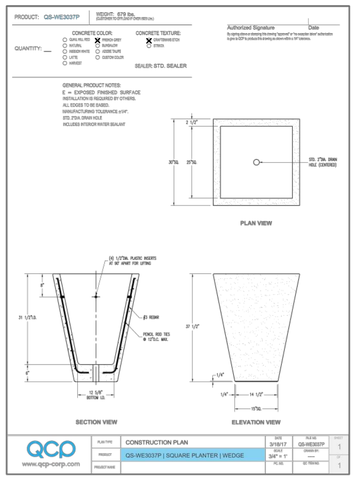

IMAGES FOR REFERENCE ONLY
SCALE: N.T.S.

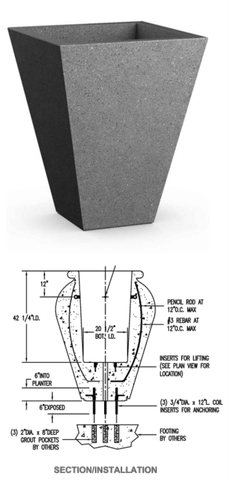

SECTION/INSTALLATION

ANCHORING DETAIL - FOR REFERENCE ONLY
SCALE: N.T.S.

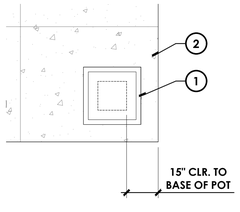

PLAN VIEW - SQUARE POTS
SCALE: 3/8" = 1'-0"

LEGEND:
1. INSTALL (20) 30" SQUARE WEDGE POT BY QCP, OR APPROVED EQUAL. MODEL# QS-WE3037P. COLOR: FRENCH GRAY. FINISH: CRAFTMANS ETCH. SHALL BE SUPPLIED BY QCP CORP. CONTACT: CYNTHIA CHAVEZ (951) 256-3221. SEE CONSTRUCTION PLAN, SHEET L-1.01 FOR LOCATIONS. INSTALL PER MANUFACTURER'S SPECIFICATIONS AND RECOMMENDATIONS. ANCHOR POT TO CONCRETE PAVING PER MANUFACTURER'S SECTION/INSTALLATION, THIS DETAIL.
2. ADJACENT HARDSCAPE. SEE CONSTRUCTION PLAN, SHEET L-1.01 AND DETAIL 1, SHEET L-1.01.

NOTE:
A. INSTALL POTS PER MANUFACTURER'S RECOMMENDATIONS AND SPECIFICATIONS.

5 30" SQUARE PRECAST CONCRETE POT

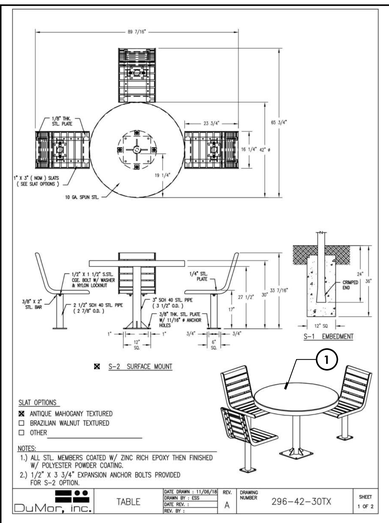

DuMor, Inc.	TABLE	DATE DRAWN : 11/08/16 · DRAWN BY : ESS · DATE REV. : · REV. BY :	REV. A	DRAWING NUMBER 296-42-30TX	SHEET 1 OF 2

IMAGE FOR REFERENCE ONLY
SCALE: N.T.S.

TEXTURED GREY

Antique Mahogany

IMAGES FOR REFERENCE ONLY
SCALE: N.T.S.

LEGEND:
1. INSTALL (2) 42" DIAMETER ADA ACCESSIBLE STEEL TABLE WITH 3 SEATS BY DUMOR, OR APPROVED EQUAL. MODEL# 296-42-30TX/S2. FINISH: ANTIQUE MAHOGANY (WOOD GRAIN RECYCLED PLASTIC). COLOR: TEXTURED GREY (METAL COMPONENTS). SHALL BE SUPPLIED BY REC WEST OUTDOOR PRODUCTS INC. CONTACT: DERRICK SHIMA (818) 735-3838. SEE CONSTRUCTION PLAN, SHEET L-1.01 FOR LOCATIONS. SURFACE MOUNT (TYPE S-2) PER MANUFACTURER'S SPECIFICATIONS AND RECOMMENDATIONS.
2. 36"X48" ADA COMPANION AREA.
3. ADJACENT HARDSCAPE. SEE CONSTRUCTION PLAN, SHEET L-1.01 AND DETAIL 1, SHEET L-1.01.
4. CONTROL JOINT PER PLANS AND DETAIL 2, SHEET L-2.01.

NOTE:
A. INSTALL TABLE AND CHAIRS PER MANUFACTURER'S RECOMMENDATIONS AND SPECIFICATIONS.

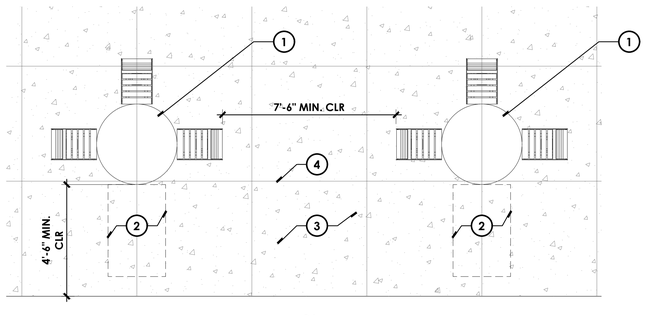

PLAN VIEW - ROUND TABLES WITH CHAIRS AND UMBRELLA
SCALE: 3/8" = 1'-0"

4 42" ROUND TABLE WITH SEATING

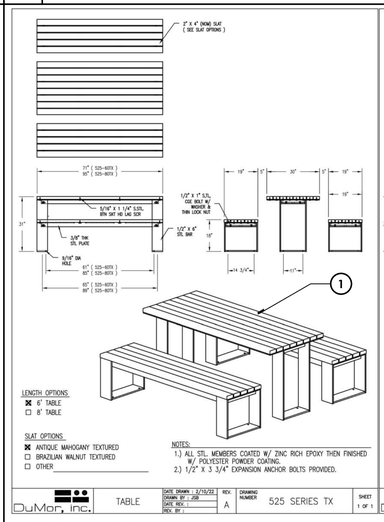

DuMor, Inc.	BENCH	DATE DRAWN : 12/9/21 · DRAWN BY : JSB · DATE REV. : · REV. BY :	REV. A	DRAWING NUMBER 523 SERIES	SHEET 1 OF 2

IMAGES FOR REFERENCE ONLY
SCALE: N.T.S.

TEXTURED GREY

Antique Mahogany

IMAGES FOR REFERENCE ONLY
SCALE: N.T.S.

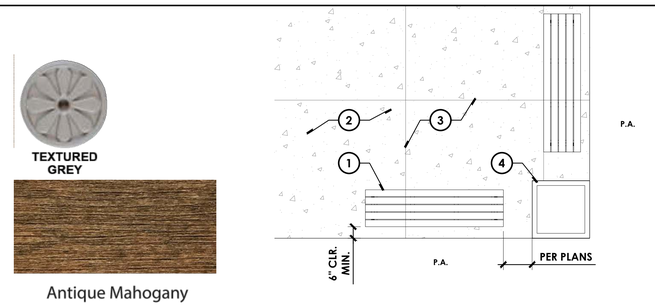

PLAN VIEW - BENCH SEATING
SCALE: 3/8" = 1'-0"

LEGEND:
1. INSTALL (6) 6' BACKLESS BENCH BY DUMOR, OR APPROVED EQUAL. MODEL# 523-60TX. FINISH: ANTIQUE MAHOGANY (WOOD GRAIN RECYCLED PLASTIC). COLOR: TEXTURED GREY (METAL COMPONENTS). SHALL BE SUPPLIED BY REC WEST OUTDOOR PRODUCTS INC. CONTACT: DERRICK SHIMA (818) 735-3838. SEE CONSTRUCTION PLAN, SHEET L-1.01 FOR LOCATIONS. SURFACE MOUNT PER MANUFACTURER'S SPECIFICATIONS AND RECOMMENDATIONS.
2. ADJACENT HARDSCAPE. SEE CONSTRUCTION PLAN, SHEET L-1.01 AND DETAIL 1, SHEET L-1.01.
3. CONTROL JOINT PER PLANS AND DETAIL 2, SHEET L-2.01.
4. ADJACENT PLANTER, WHERE OCCURS. SEE CONSTRUCTION PLAN, SHEET L-1.01 FOR LOCATIONS.

NOTE:
A. INSTALL BENCHES PER MANUFACTURER'S RECOMMENDATIONS AND SPECIFICATIONS.

1 6' BENCHES

DuMor, Inc.	TABLE	DATE DRAWN : 2/15/22 · DRAWN BY : JSB · DATE REV. : · REV. BY :	REV. A	DRAWING NUMBER 525 SERIES TX	SHEET 1 OF 1

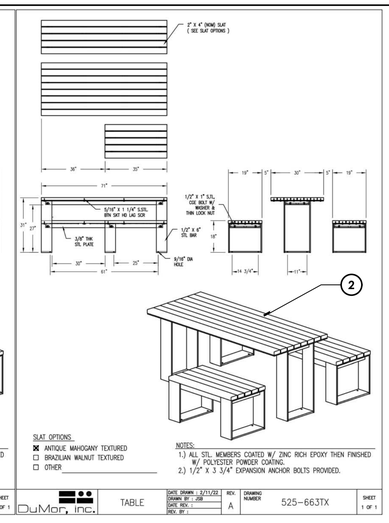

DuMor, Inc.	TABLE	DATE DRAWN : 2/11/22 · DRAWN BY : JSB · DATE REV. : · REV. BY :	REV. A	DRAWING NUMBER 525-663TX	SHEET 1 OF 1

IMAGES FOR REFERENCE ONLY
SCALE: N.T.S.

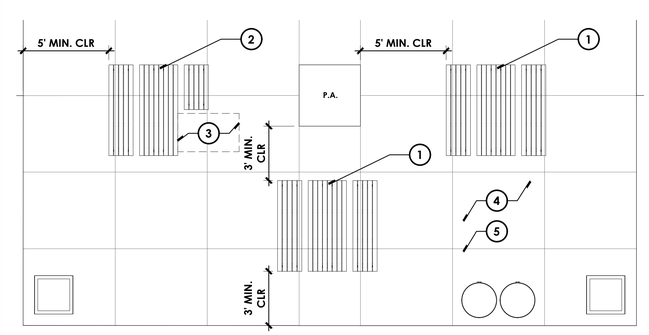

PLAN VIEW - PICNIC TABLES
SCALE: 1/4" = 1'-0"

LEGEND:
1. INSTALL (2) 6' 525 TABLE BY DUMOR, OR APPROVED EQUAL. MODEL# 525-60TX. FINISH: ANTIQUE MAHOGANY (WOOD GRAIN RECYCLED PLASTIC). COLOR: TEXTURED GREY (METAL COMPONENTS). SHALL BE SUPPLIED BY REC WEST OUTDOOR PRODUCTS INC. CONTACT: DERRICK SHIMA (818) 735-3838. SEE CONSTRUCTION PLAN, SHEET L-1.01 FOR LOCATIONS. SURFACE MOUNT PER MANUFACTURER'S SPECIFICATIONS AND RECOMMENDATIONS.
2. INSTALL (1) 6' 525 ADA TABLE BY DUMOR, OR APPROVED EQUAL. MODEL# 525-663TX. FINISH: ANTIQUE MAHOGANY (WOOD GRAIN RECYCLED PLASTIC). COLOR: TEXTURED GREY (METAL COMPONENTS). SHALL BE SUPPLIED BY REC WEST OUTDOOR PRODUCTS INC. CONTACT: DERRICK SHIMA (818) 735-3838. SEE CONSTRUCTION PLAN, SHEET L-1.01 FOR LOCATIONS. SURFACE MOUNT PER MANUFACTURER'S SPECIFICATIONS AND RECOMMENDATIONS.
3. 36"X48" ADA COMPANION AREA.
4. ADJACENT HARDSCAPE. SEE CONSTRUCTION PLAN, SHEET L-1.01 AND DETAIL 1, SHEET L-1.01.
5. CONTROL JOINT PER PLANS AND DETAIL 2, SHEET L-2.01.

NOTE:
A. INSTALL TABLES PER MANUFACTURER'S RECOMMENDATIONS AND SPECIFICATIONS.

2 6' PICNIC TABLES

DIGALERT
DIAL TOLL FREE
1-800-422-4133
AT LEAST TWO DAYS BEFORE YOU DIG
UNDERGROUND SERVICE ALERT OF SOUTHERN CALIFORNIA

BASIS OF BEARINGS:
BEARINGS SHOWN HEREON ARE BASED ON THE CENTERLINE OF 162 ND STREET (FORMERLY MARKET STREET) BEING N 89° 55' 30" E SHOWN ON TRACT NO. 10901, M.B. 254/31-32

BENCHMARK:
THE CITY OF GARDENA BENCHMARK NO. 5D-15 ELEV. = 43.508

CONSULTANT:

PREPARED UNDER THE SUPERVISION OF:
RJM DESIGN GROUP
31591 Camino Capistrano
San Juan Capistrano, CA 92675
www.RJMdesigngroup.com
[949] 493-2690 fax
[949] 493-2600 phone

REVISIONS

NO.	DESCRIPTION	DATE	APPROVED
1	90% CD SUBMITTAL	12/15/2022	
2	100% CD SUBMITTAL	05/01/2023	
3	FINAL SUBMITTAL	10/02/2023	

CITY OF GARDENA
DEPARTMENT OF PUBLIC WORKS - ENGINEERING
CONSTRUCTION DETAILS
COMMUNITY AQUATICS & SENIOR CENTER
L-2.05

	INITAL	DATE	APPROVED BY:
DESIGNED BY	EC	11/14/2022	
DRAWN BY	TP	04/20/2023	
CHECKED BY	EC	10/02/2023	DATE · DIRECTOR OF PUBLIC WORKS

SHT. 20 OF 195 · DWG. NO. 5-2606

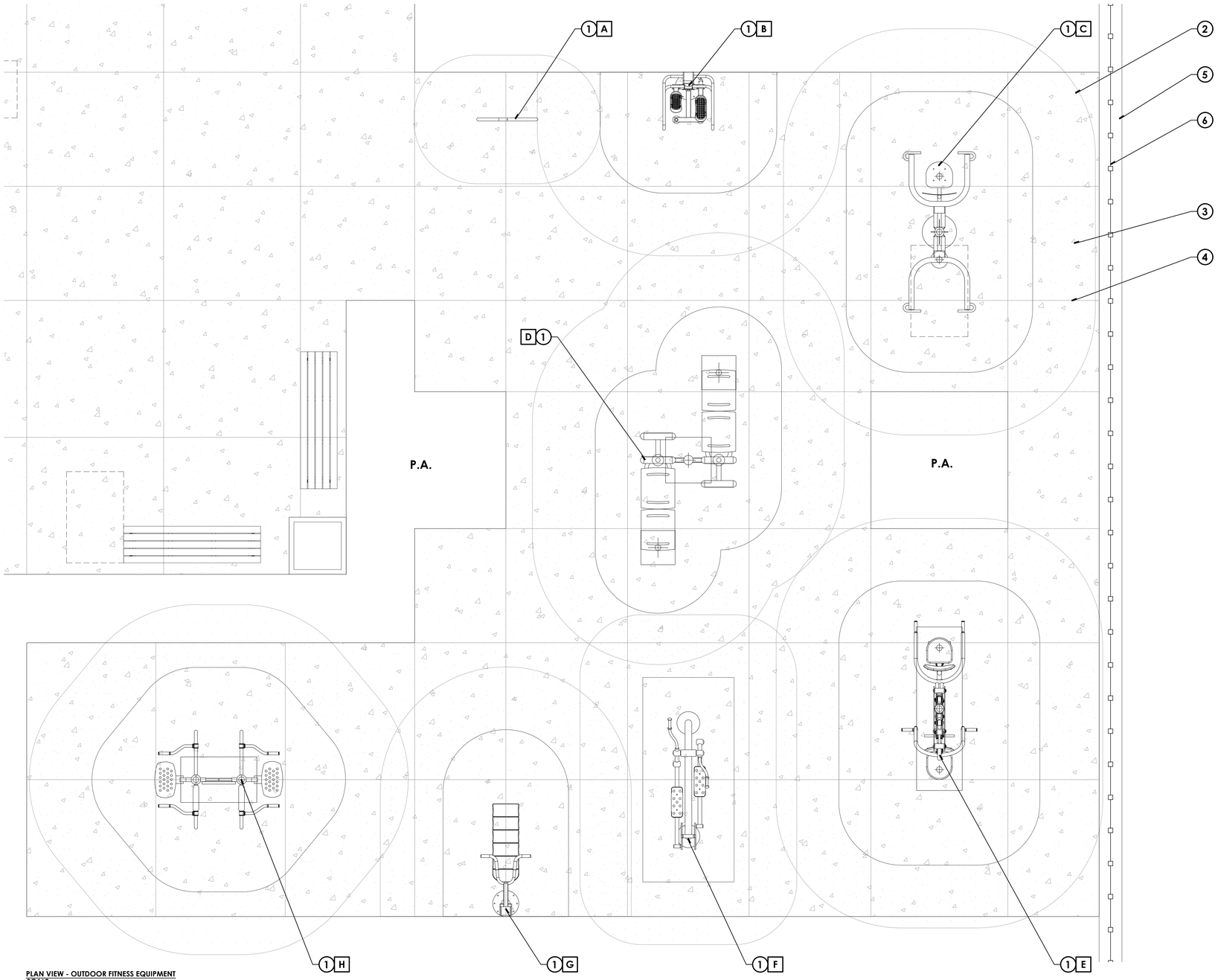

PLAN VIEW - OUTDOOR FITNESS EQUIPMENT
SCALE: 1/2" = 1'-0"

LEGEND:

1. OUTDOOR FITNESS EQUIPMENT BY GREENFIELDS OUTDOOR FITNESS, OR APPROVED EQUAL. PROVIDED BY: MIRACLE PLAYGROUND SALES. CONTACT JOHN JASON (714) 271-2983. COLORS: SKY BLUE (RAL 5015), SILVER (RAL 9006), AND BLACK. SEE 'CUSTOM COLOR RAL COLOR SCHEME' THIS DETAIL. FINAL COLORS TO BE SELECTED & APPROVED BY THE CITY. INSTALL PER MANUFACTURER'S RECOMMENDATIONS AND SPECIFICATIONS.
2. FITNESS EQUIPMENT CLEARANCE ZONE, PER MANUFACTURER.
3. CONCRETE PAVING. SEE FINISH SCHEDULE ON CONSTRUCTION PLAN, SHEET L-1.01 AND DETAIL 1, SHEET L-2.01.
4. CONTROL JOINT PER DETAIL 3, SHEET L-2.01.
5. CONCRETE MOW CURB. SEE DETAIL 4, SHEET L-2.01.
6. TUBULAR STEEL FENCING. SEE DETAIL 2, SHEET L-2.03.

NOTES:

A. INSTALL ALL FITNESS EQUIPMENT PER MANUFACTURER'S CURRENT INSTALLATION RECOMMENDATIONS AND SPECIFICATIONS.

OUTDOOR FITNESS EQUIPMENT LEGEND

	MANUFACTURER	MODEL NO.	DESCRIPTION
A	GREENFIELDS	SGR1015	CUSTOMIZED ANNOUNCEMENT SIGN
B	GREENFIELDS	UBX292-01	STEPPER
C	GREENFIELDS	SGR048W-03	2-PERSON ACCESSIBLE LAT PULL
D	GREENFIELDS	SGR019-03	2-PERSON INCLINE SIT-UP BENCHES
E	GREENFIELDS	SGR042-03	2-PERSON BACK & ARMS COMBO
F	GREENFIELDS	SHP003	ELLIPTICAL CROSS TRAINER
G	GREENFIELDS	UBX293-01	BENCH PRESS
H	GREENFIELDS	SGR022-03	4-PERSON PENDULUM, ABS, & DIP STATION

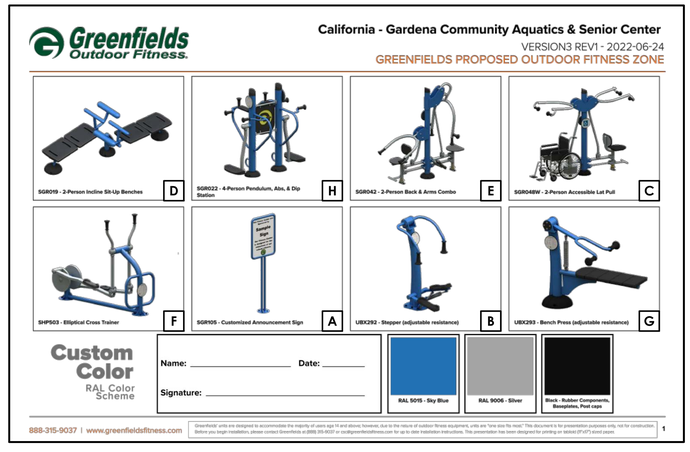

IMAGE FOR REFERENCE ONLY
SCALE: N.T.S.

1 OUTDOOR FITNESS EQUIPMENT

DIGALERT
DIAL TOLL FREE
1-800-422-4133
AT LEAST TWO DAYS BEFORE YOU DIG
UNDERGROUND SERVICE ALERT OF SOUTHERN CALIFORNIA

BASIS OF BEARINGS:
BEARINGS SHOWN HEREON ARE BASED ON THE CENTERLINE OF 162 ND STREET (FORMERLY MARKET STREET) BEING N 89° 55' 30" E SHOWN ON TRACT NO. 10901, M.B. 254/31-32

BENCHMARK:
THE CITY OF GARDENA BENCHMARK NO. 5D-15 ELEV. = 43.508

CONSULTANT:

PREPARED UNDER THE SUPERVISION OF:
RJM DESIGN GROUP
31591 Camino Capistrano
San Juan Capistrano, CA 92675
www.RJMdesigngroup.com
[949] 493-2690 fax
[949] 493-2600 phone

REGISTERED LANDSCAPE ARCHITECT — STATE OF CALIFORNIA — 5539 — 05/01/2023 — 10/01/2023

REVISIONS

NO.	DESCRIPTION	DATE	APPROVED
1	90% CD SUBMITTAL	12/15/2022	
2	100% CD SUBMITTAL	05/01/2023	
3	FINAL SUBMITTAL	10/02/2023	

CITY OF GARDENA
DEPARTMENT OF PUBLIC WORKS - ENGINEERING
LANDSCAPE CONSTRUCTION DETAILS
COMMUNITY AQUATICS & SENIOR CENTER
L-2.06

	INITIAL	DATE
DESIGNED BY	EC	11/14/2022
DRAWN BY	TP	04/20/2023
CHECKED BY	EC	10/02/2023

APPROVED BY:
DATE
DIRECTOR OF PUBLIC WORKS
SHT. 21 OF 195
DWG. NO. 5-2606

DESIGN LOADING
TREAD & SEAT AREA 100psf UNIFORM LIVE LOAD.
SEAT (VERTICAL) 120 lbs/lf.
SEAT (HORIZONTAL SWAY) 24lbs/lf PARALLEL AND 10lbs/lf PERPENDICULAR TO SEAT.
TREAD - STAIR AND AISLE TREADS - MINIMUM CONCENTRATED LOAD OF 300LBS ON AN AREA OF 4 SQUARE INCHES
HANDRAIL & GUARDRAIL 50 lbs/lf IN ANY DIRECTION AT THE TOP.
HANDRAIL & GUARDRAIL 200 lbs CONCENTRATED IN ANY DIRECTION.
GUARDS, INFILL COMPONENTS - 50LBS PER SQ.FT. IN HORIZONTAL DIRECTION
SNOW LOADS AS PER STATE ADOPTED CODE
WIND LOADS AS PER STATE ADOPTED CODE
SEISMIC LOADS AS PER STATE ADOPTED CODE

NOTES
1. ALL STRUCTURAL AND MISCELLANEOUS STEEL SHALL CONFORM TO THE FOLLOWING A.I.S.C. STANDARDS
   PLATE UP TO 1/2" THICK = A36 Gr. 36 Fy = 36 ksi Min.
   PLATE 5/8 and greater = 572 Gr 50, Fy = 50 ksi Min.
   ANGLE = A36/A36M GRADE 50
   WIDE FLANGE = A992 Fy=50 ksi
   CHANNEL = A36/A36M GRADE 50
   ROD = A36/A529 GRADE 50
   TUBE = A500 GRADE "B" 46 ksi
2. WELDS ARE ALL AROUND WITH TYPE ER70S-6 WIRE MIG.
3. ALL STEEL TO BE HOT DIPPED GALVANIZED TO A.S.T.M. A-123-89 ae1.
4. STRUCTURAL BOLTS ARE HOT DIPPED GALV. AND ARE EQUAL TO OR GREATER THAN A-307.
5. NO CONNECTIONS UTILIZING HIGH STRENGTH BOLTS ARE CLASSED AS SLIP CRITICAL.
6. ANODIZED ALUMINUM RAIL IS 1 1/4" NOMINAL PIPE SIZE. (1 5/8" O.D.)
7. SOUTHERN BLEACHER COMPANY AS A MANUFACTURER AND INSTALLER OF GRANDSTAND SEATING IS NOT AUTHORIZED TO CERTIFY PLANS AS ADA COMPLIANT. HOWEVER, TO THE BEST OF OUR KNOWLEDGE THESE PLANS MEET OR EXCEED ADA REQUIREMENTS FOR QUANTITY OF ADA SEATING, ACCESS/EGRESS TO ADA SEATING, & DISPERSAL OF ADA SEATING.
8. ALL FIELD CONNECTIONS ARE NON-SLIP CRITICAL U.N.O. ALL CONNECTIONS ARE DESIGNED TO UTILIZE A307 BOLTS. IT IS ACCEPTABLE TO USE A325N BOLTS IN LIEU OF THE A307 BOLTS. THE INSTALLATION OF THESE BOLTS ARE TO BE TIGHTENED A SNUG TIGHT CONDITION AS SPECIFIED BY AISC.

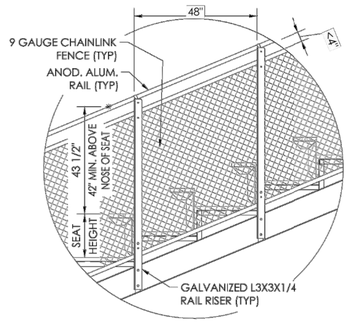

TYPICAL SIDE RAILING
SCALE:1/2"=1'-0"

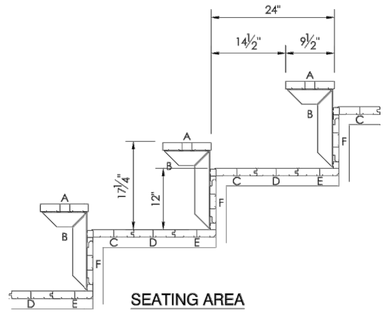

SEATING AREA

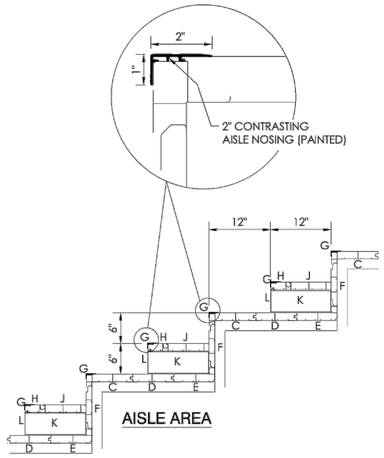

AISLE AREA

A = 2 X 10 HEAVY ANODIZED ALUMINUM SEAT
B = MILL ALUMINUM SEAT BRACKET
C = 2 X 8 MILL ALUMINUM TONGUE & GROOVE 2001 TREAD - NOSE
D = 2 X 8 MILL ALUMINUM TONGUE & GROOVE TREAD (#69432)
E = 2 X 8 MILL ALUMINUM TONGUE & GROOVE 2001 TREAD - HEEL
F = 1 X 8 1/2 FLAT ANODIZED ALUMINUM RISER
G = 1 X 2 PAINTED ALUMINUM CONTRASTING NOSING (BLACK)
H = 2 X 4 MILL ALUM. INTERLOCK HALFSTEP - NOSE W/RISER
J = 2 X 8 MILL ALUM. INTERLOCK HALFSTEP - DECK
K = 4 1/2" MILL ALUMINUM HALFSTEP BRACKET
L = 4 1/2" ANODIZED ALUMINUM INTERLOCK STEP RISER

PLANK ARRANGEMENT
NOT TO SCALE 12" X 24"

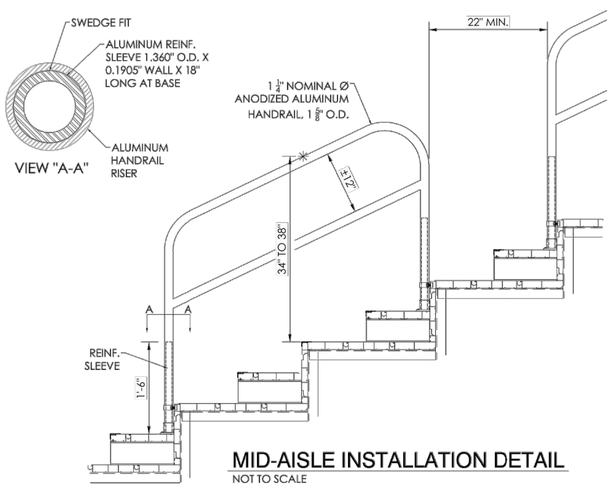

MID-AISLE INSTALLATION DETAIL
NOT TO SCALE

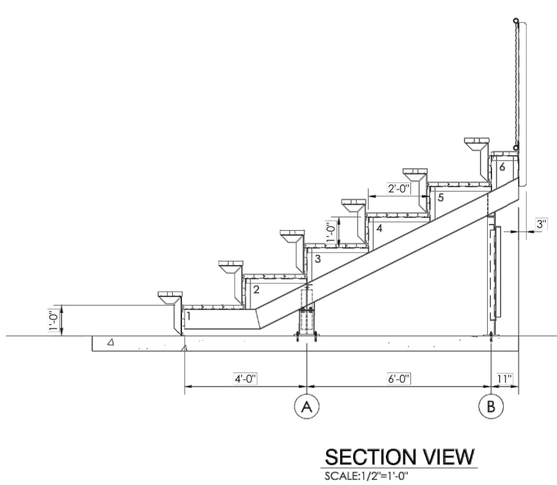

SECTION VIEW
SCALE:1/2"=1'-0"

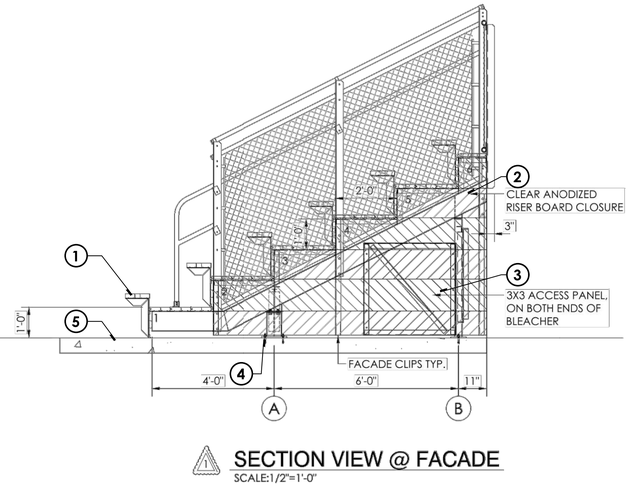

SECTION VIEW @ FACADE
SCALE:1/2"=1'-0"

REV	BY	DATE	DESCRIPTION
3	BGL	10/02/23	ADDED FACADE VIEW

SECTION VIEW
12" RISE X 24" TREAD / 63'-0" (6 ROWS)

DATE 4/7/2022 DRAWN BGL CHECKED DMC
JOB NUMBER #22sd046
SHEET 1 OF 3

22" X 34" (11x17 = 1/2 indicated scale)

DETAIL NUMBER / SHEET NUMBER

THIS DRAWING AND ALL INFORMATION THEREIN IS THE PROPERTY OF THE SOUTHERN BLEACHER COMPANY, AND IS CONSIDERED CONFIDENTIAL. IT MAY NOT BE COPIED. THIS DRAWING IS LOANED SUBJECT TO RE-TURN UPON DEMAND, AND IS NOT TO BE USED, COPIED OR DISCLOSED IN ANY WAY DETRIMENTAL TO OUR INTERESTS.

NOT FOR CONSTRUCTION

Southern BLEACHER COMPANY
GRANDSTANDS • BLEACHERS • STADIUMS
PO Box One, Graham, Texas 76450
801 Fifth Street.
Phone: 940/549-0733 Fax: 940/549-1365
Established 1946

Dolphin Green

IMAGE FOR REFERENCE ONLY
SCALE: N.T.S.

LEGEND:
1. INSTALL 63' WIDE 8-ROW LEG TRUSS BLEACHER (12" RISE X 24" TREADS) BY: SOUTHERN BLEACHER COMPANY, INC., OR APPROVED EQUAL. CONTACT: JOE HOY AT (916) 812-4901. RISER COLOR: DOLPHIN GREEN. FINAL COLOR TO BE SELECTED & APPROVED BY CITY. INSTALL PER MANUFACTURER'S RECOMMENDATIONS AND SPECIFICATIONS. LOCATION AS SHOWN ON LANDSCAPE CONSTRUCTION PLAN, SHEET L-1.01.
2. ALUMINUM RISER BOARD CLOSURE WITH CLEAR ANODIZED FINISH - BOTH ENDS OF BLEACHER.
3. 3'X3' ACCESS PANEL - BOTH ENDS OF BLEACHER.
4. BLEACHER POST FOOTING AND ATTACHMENT TO CONCRETE PER MANUFACTURERS RECOMMENDATIONS.
5. ADJACENT 6" CONCRETE PAVING - POOL DECK. SEE CONSTRUCTION PLAN, SEE SHEET L-1.01.

NOTES:
A. ALL STEEL TO RECEIVE HOT DIPPED GALVANIZED FINISH.
B. STRUCTURAL ENGINEERING FOR BLEACHER(S) SHALL BE PROVIDED BY: SOUTHERN BLEACHER COMPANY, INC. CONTACT: JOE HOY AT (916) 812-4901. ENGINEERING SHALL BE PROVIDED BY A STATE OF CALIFORNIA LICENSED STRUCTURAL ENGINEER. ENGINEERING SHALL IDENTIFY ALL MATERIAL SIZES, WALL THICKNESSES, FASTENERS, CONNECTIONS, AND FOOTINGS. WALL THICKNESS OF STEEL MEMBERS SHALL BE SIZED TO PROVIDE FOR POST, SPAN, CANTILEVER BEAM AND JOIST SIZES AS INDICATED ON THESE DRAWINGS.
C. FOOTINGS SHALL BE DESIGNED TO IMPEDE IN NO WAY AND IMPART AND/OR TRANSFER NO LOADS OR FORCES ONTO ADJACENT CONSTRUCTION IMPROVEMENTS (SEAT WALLS, RETAINING WALLS, CONCRETE PAVING, PAVERS, PILASTERS, SITE FURNISHINGS, ETC.)
D. BLEACHER FINAL ENGINEERING DRAWINGS SHALL BE SUBMITTED BY THE CONTRACTOR AS A DEFERRED SUBMITAL FOR REVIEW AND APPROVAL BY THE CITY PRIOR TO CONSTRUCTION. CONTRACTOR SHALL PROVIDE SUBMITTAL ALLOWING FOR A MINIMUM OF TWO (2) THIRTY (30) DAY CITY PLAN CHECK REVIEW CYCLES.
E. DRAWINGS SHOWN FOR REFERENCE ONLY. NOT FOR CONSTRUCTION.

1 BLEACHER SEATING

DIGALERT
DIAL TOLL FREE 1-800-422-4133
AT LEAST TWO DAYS BEFORE YOU DIG
UNDERGROUND SERVICE ALERT OF SOUTHERN CALIFORNIA

BASIS OF BEARINGS:
BEARINGS SHOWN HEREON ARE BASED ON THE CENTERLINE OF 162 ND STREET (FORMERLY MARKET STREET) BEING N 89° 55' 30" E SHOWN ON TRACT NO. 10901, M.B. 254/31-32

BENCHMARK:
THE CITY OF GARDENA BENCHMARK NO. 5D-15 ELEV. = 43.508

CONSULTANT:

PREPARED UNDER THE SUPERVISION OF:
RJM DESIGN GROUP
31591 Camino Capistrano
San Juan Capistrano, CA 92675
www.RJMdesigngroup.com
[949] 493-2690 fax
[949] 493-2600 phone

REVISIONS

NO.	DESCRIPTION	DATE	APPROVED
1	90% CD SUBMITTAL	12/15/2022	
2	100% CD SUBMITTAL	05/01/2023	
3	FINAL SUBMITTAL	10/02/2023	

CITY OF GARDENA
DEPARTMENT OF PUBLIC WORKS - ENGINEERING
CONSTRUCTION DETAILS
COMMUNITY AQUATICS & SENIOR CENTER
L-2.07

	INITAL	DATE
DESIGNED BY	EC	11/14/2022
DRAWN BY	TP	06/20/2023
CHECKED BY	EC	10/02/2023

APPROVED BY:
DATE
DIRECTOR OF PUBLIC WORKS

SHT. 22 OF 195 DWG. NO. S-2606

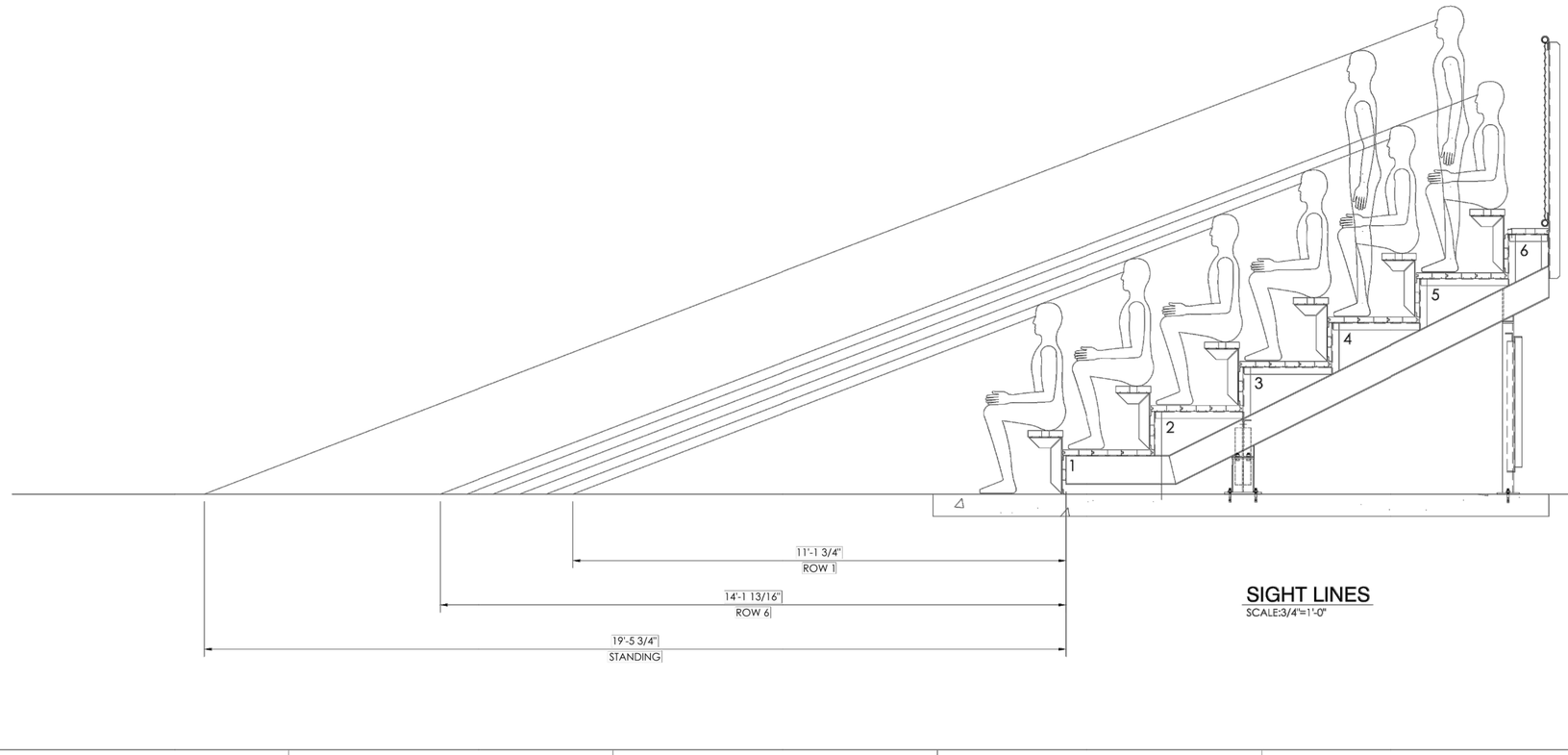

SIGHT LINES
SCALE:3/4"=1'-0"

DETAIL NUMBER
SHEET NUMBER

NOT FOR CONSTRUCTION

THIS DRAWING AND ALL INFORMATION THEREIN IS THE PROPERTY OF THE SOUTHERN BLEACHER COMPANY. ANY COPYING, USE OR DISCLOSURE WITHOUT WRITTEN PERMISSION IS STRICTLY PROHIBITED. THIS DRAWING IS LOANED SUBJECT TO RETURN UPON DEMAND AND, IS NOT TO BE USED DIRECTLY OR INDIRECTLY IN ANY WAY DETRIMENTAL TO OUR INTERESTS.

Southern® BLEACHER COMPANY
GRANDSTANDS •BLEACHERS •STADIUMS
PO Box One, Graham, Texas 76450
901 Fifth Street
Phone: 940/549-0733 Fax: 940/549-1365
Established 1946

TYP.	SIGHT LINES
SIZE	12" RISE X 24" TREAD / 63'-0" (6 ROWS)

CITY OF GARDENA
AQUATICS BLEACHER
GARDENA, CALIFORNIA

REV'S BY	DATE	DESCRIPTION
BGL	10/02/23	NONE ON THIS PAGE

DATE	DRAWN	CHECKED
4/7/2022	BGL	DMC

JOB NUMBER
#22sd046

SHEET 2 OF 3

22" X 34" (11x17 = 1/2 indicated scale)

1 BLEACHER SEATING

DIGALERT
DIAL TOLL FREE
1-800-422-4133
AT LEAST TWO DAYS BEFORE YOU DIG
UNDERGROUND SERVICE ALERT OF SOUTHERN CALIFORNIA

BASIS OF BEARINGS:
BEARINGS SHOWN HEREON ARE BASED ON THE CENTERLINE OF 162 ND STREET (FORMERLY MARKET STREET) BEING N 89° 55' 30" E SHOWN ON TRACT NO. 10901, M.B. 254/31-32

BENCHMARK:
THE CITY OF GARDENA BENCHMARK NO. 5D-15 ELEV. = 43.508

CONSULTANT:

PREPARED UNDER THE SUPERVISION OF:

RJM DESIGN GROUP
31591 Camino Capistrano
San Juan Capistrano, CA 92675
www.RJMdesigngroup.com
(949) 493-2690 fax
(949) 493-2600 phone

REGISTERED LANDSCAPE ARCHITECT — STATE OF CALIFORNIA — 5989 — 01.09.2023 RENEWAL 01.31.2025

REVISIONS

NO.	DESCRIPTION	DATE	APPROVED
1	90% CD SUBMITTAL	12/15/2022	
2	100% CD SUBMITTAL	05/01/2023	
3	FINAL SUBMITTAL	10/02/2023	

CITY OF GARDENA
DEPARTMENT OF PUBLIC WORKS - ENGINEERING

CONSTRUCTION DETAILS

COMMUNITY AQUATICS & SENIOR CENTER
L-2.08

	INITAL	DATE
DESIGNED BY	EC	11/14/2022
DRAWN BY	TP	06/20/2023
CHECKED BY	EC	10/02/2023

APPROVED BY:

DATE DIRECTOR OF PUBLIC WORKS

SHT. 23 OF 195 DWG. NO. S-2606

SEAT COUNT	
18" BENCH SEATS	186
36" WHEELCHAIR SPACES	1
33" WHEELCHAIR SPACES	4
18" COMPANION SEATS C	5
TOTAL SEAT COUNT	**196**

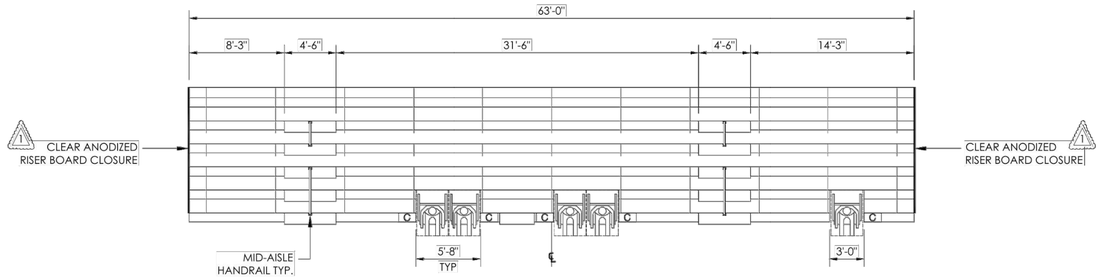

SEATING LAYOUT

SCALE:3/16"=1'-0"

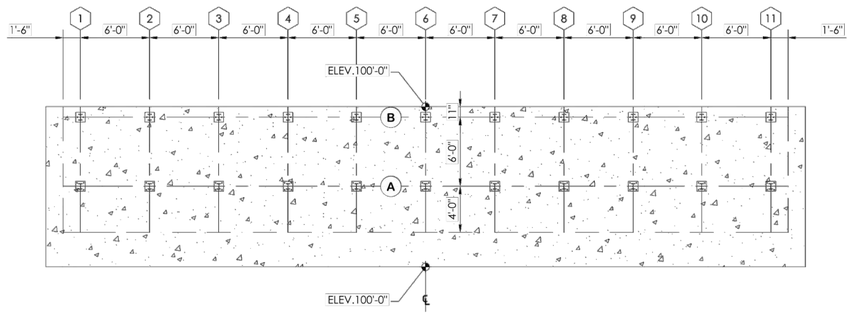

FOOTING LAYOUT

SCALE:3/16"=1'-0"

NOTE:
SLAB DIMENSIONS LISTED ARE FOR BLEACHERS ONLY.
ADDITIONAL DEPTH FOR WHEELCHAIR ACCESS MUST BE MADE.

DETAIL NUMBER
SHEET NUMBER

THIS DRAWING AND ALL INFORMATION THEREIN IS THE PROPERTY OF THE SOUTHERN BLEACHER COMPANY, AND IS CONFIDENTIAL AND MUST NOT BE MADE PUBLIC OR COPIED. THIS DRAWING IS LOANED SUBJECT TO RETURN UPON DEMAND AND, IS NOT TO BE USED DIRECTLY OR INDIRECTLY IN ANY WAY DETRIMENTAL TO OUR INTERESTS.

NOT FOR CONSTRUCTION

Southern® BLEACHER COMPANY
GRANDSTANDS •BLEACHERS •STADIUMS
PO Box One, Graham, Texas 76450
801 Fifth Street.
Phone: 940/549-0733 Fax: 940/549-1365
Established 1946

TITLE: SEATING LAYOUT / FOOTING LAYOUT
12" RISE X 24" TREAD / 63'-0" (6 ROWS)

SITE: CITY OF GARDENA
AQUATICS BLEACHER
GARDENA, CALIFORNIA

REV	BY	DATE	DESCRIPTION
1	BGL	10/5/23	ADDED FACADE & NOTES

DATE: 4/7/2022 DRAWN: BGL CHECKED: DMC

JOB NUMBER: #22sd046

SHEET 3 OF 3

22" X 34" (11x17 = 1/2 indicated scale)

1 BLEACHER SEATING

DIGALERT
DIAL TOLL FREE 1-800-422-4133
AT LEAST TWO DAYS BEFORE YOU DIG
UNDERGROUND SERVICE ALERT OF SOUTHERN CALIFORNIA

BASIS OF BEARINGS:
BEARINGS SHOWN HEREON ARE BASED ON THE CENTERLINE OF 162 ND STREET (FORMERLY MARKET STREET) BEING N 89° 55' 30" E SHOWN ON TRACT NO. 10901, M.B. 254/31-32

BENCHMARK:
THE CITY OF GARDENA BENCHMARK NO. 5D-15 ELEV. = 43.508

CONSULTANT:

PREPARED UNDER THE SUPERVISION OF:
RJM DESIGN GROUP
31591 Camino Capistrano
San Juan Capistrano, CA 92675
www.RJMdesigngroup.com
[949] 493-2690 fax
[949] 493-2600 phone

LICENSED LANDSCAPE ARCHITECT
STATE OF CALIFORNIA
09-06-2023
09-06-2023
09-06-2023

REVISIONS

NO.	DESCRIPTION	DATE	APPROVED
1	90% CD SUBMITTAL	12/15/2022	
2	100% CD SUBMITTAL	05/01/2023	
3	FINAL SUBMITTAL	10/02/2023	

CITY OF GARDENA
DEPARTMENT OF PUBLIC WORKS - ENGINEERING
CONSTRUCTION DETAILS
COMMUNITY AQUATICS & SENIOR CENTER
L-2.09

	INITAL	DATE
DESIGNED BY	EC	11/14/2022
DRAWN BY	TP	04/20/2023
CHECKED BY	EC	10/02/2023

APPROVED BY:
DATE DIRECTOR OF PUBLIC WORKS
SHT. 24 OF 195 DWG. NO. 5-2606

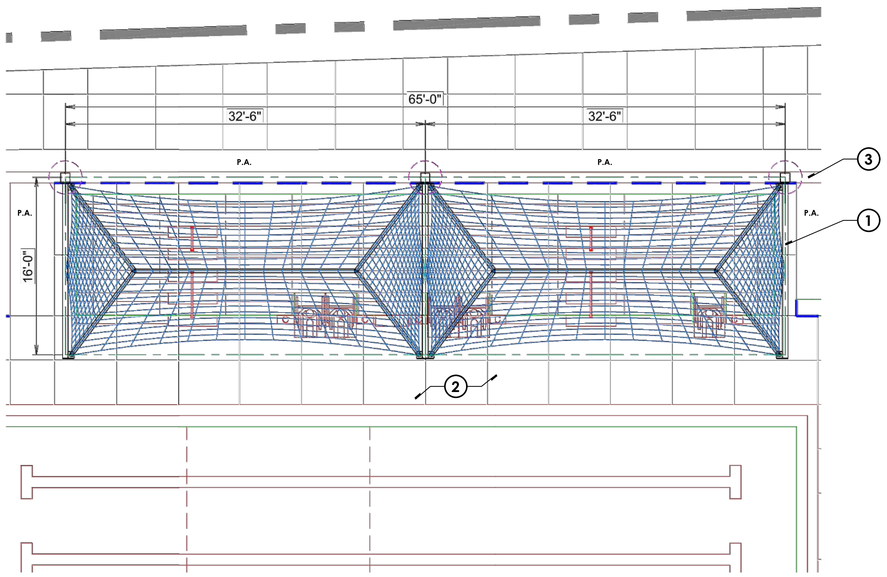

PLAN VIEW

PLAN NORTH

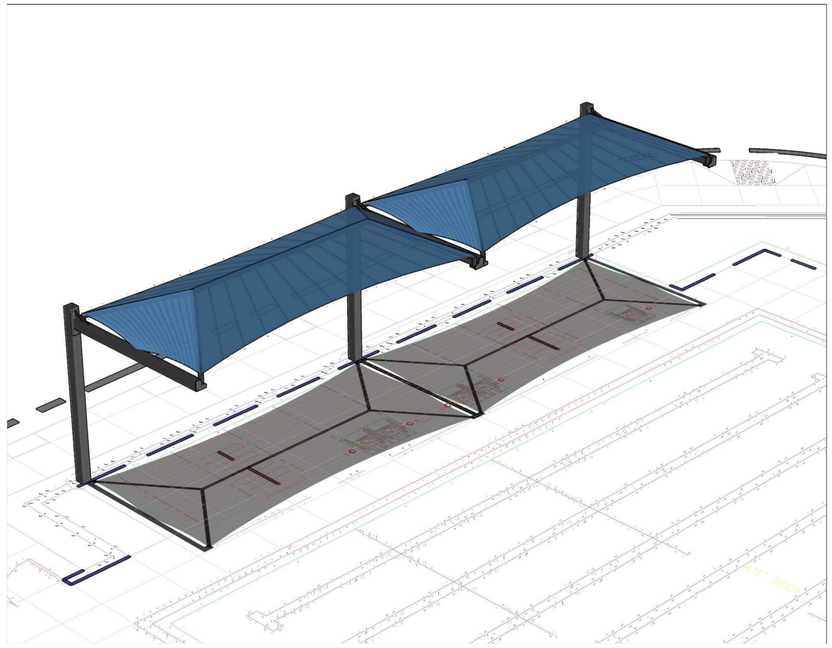

PERSPECTIVE VIEW

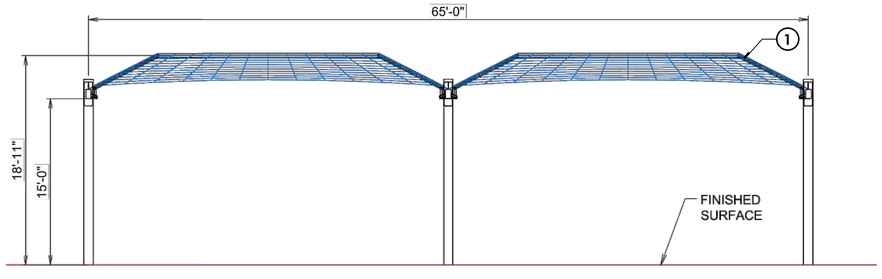

SOUTH ELEVATION

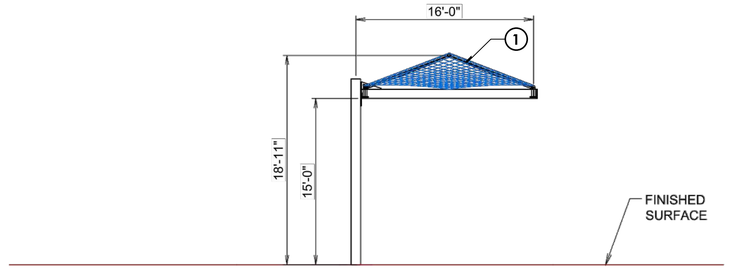

WEST ELEVATION

NOTES:
-THESE DRAWINGS ARE A PICTORIAL REPRESENTATION OF FABRIC AND STEEL ONLY. NONE OF THE REQUIRED ATTACHMENT OR CONNECTION DETAILS HAVE BEEN DEPICTED.
-ALL DIMENSIONS AND HEIGHTS MUST BE FIELD VERIFIED PRIOR TO ANY FINAL DESIGN, FABRICATION OR INSTALLATION WORK.

As manufactured and installed by USA SHADE & Fabric Structures
Contact: Devin Christensen; (949) 929-8173, (800) 966-5005
Email: devin.christensen@usa-shade.com

CUSTOMER:
RJM DESIGN GROUP

PROJECT NAME:
GARDENA COMMUNITY AQUATICS & SR. CTR.

LOCATION:
LA SALLE AVE & W 160th ST
GARDENA, CA 90247

STRUCTURE TYPE:
JOINED FULL CANTI HIPS

SIZE:
16' X 65' X 15'e

THESE PLANS AND SPECIFICATIONS ARE THE PROPERTY OF USA SHADE AND FABRIC STRUCTURES AND SHALL NOT BE REPRODUCED WITHOUT THEIR WRITTEN PERMISSION.

USA SHADE & Fabric Structures®
CORPORATE HEADQUARTERS
2580 ESTERS BLVD., SUITE 100
DFW AIRPORT, TX 75261
800-966-5005

CERTIFICATIONS:
IAS CERTIFICATION No: FA-428
CLARK COUNTY MANUFACTURER CERTIFICATION NUMBER (NEVADA): 355

REV	DESCRIPTION	DATE	DRW	CHK	ENG

Drawn By :	AZR	08/09/22
Checked By :	AZR	08/09/22
Approved By :	AZR	08/09/22

DRAWING DESCRIPTION:
STRUCTURE 1

DWG.
CON-AUG-015-22

PAGE
1001

REV.

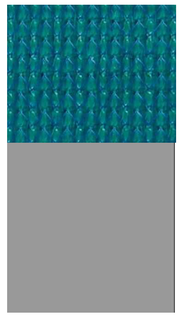

IMAGES FOR REFERENCE ONLY
SCALE: N.T.S.

LEGEND:

1. INSTALL (1) 65'X16' RECTANGULAR JOINED FULL HIP CANTILEVER SHADE STRUCTURE BY: USA SHADE. CONTACT: DEVIN CHRISTENSEN AT (714) 427-6981. INSTALL PER MANUFACTURER'S RECOMMENDATIONS AND SPECIFICATIONS. LOCATION AS SHOWN ON LANDSCAPE CONSTRUCTION PLAN, SHEET L-1.02.
2. ADJACENT CONCRETE POOL DECK PAVING PER CONSTRUCTION PLAN. SEE SHEET L-1.01 AND DETAIL 2, SHEET L-2.02.
3. ADJACENT PERIMETER WALL. SEE DETAIL 2, SHEET L-2.02 FOR WALL CONDITION AT SHADE STRUCTURE POSTS. SEE CONSTRUCTION PLAN, SHEET L-1.02 FOR LOCATIONS.

NOTES:

A. ALL STEEL EDGES TO BE ROUNDED SMOOTH TO PREVENT FABRIC DAMAGE.
B. ALL STEEL POSTS AND STEEL TUBING COMPONENTS TO RECEIVE POLYESTER POWDER-COAT FINISH. COLOR: 'TELE-GRAY' (115892). FINAL COLOR TO BE SELECTED & APPROVED BY CITY.
C. FABRIC HDPE SHADE CLOTH SHALL BE COLOR: TURQUOISE. FINAL COLOR TO SELECTED & APPROVED BY CITY. CONTRACTOR TO SUBMIT SCALED SHOP DRAWINGS/SAMPLES PRIOR TO ACQUISITION AND INSTALLATION FOR REVIEW AND APPROVAL.
D. ALL HAND HOLDS TO HAVE REINFORCED EDGING AND REMOVABLE ACCESS PANELS.
E. STRUCTURAL ENGINEERING FOR SHADE STRUCTURE(S) PROVIDED BY: USA SHADE. CONTACT: DEVIN CHRISTENSEN AT (949) 929-8173. SEE SHEETS L-2.11 - L-2.13 FOR STRUCTURAL ENGINEERING PLANS AND PROVIDED STRUCTURAL CALCULATIONS BY STATE OF CALIFORNIA LICENSED STRUCTURAL ENGINEER.
F. FOOTINGS SHALL BE DESIGNED TO IMPEDE IN NO WAY AND IMPART AND/OR TRANSFER NO LOADS OR FORCES ONTO ADJACENT CONSTRUCTION IMPROVEMENTS (SEAT WALLS, RETAINING WALLS, CONCRETE PAVING, PAVERS, PILASTERS, SITE FURNISHINGS, ETC.)

SHADE STRUCTURE BASIS OF DESIGN ENGINEERED BY USA SHADE. CONTACT: DEVIN CHRISTENSEN AT (949) 929-8173.

1 SINGLE JOINED FULL CANTILEVER SHADE STRUCTURES AT BLEACHERS

DIGALERT
DIAL TOLL FREE
1-800-422-4133
AT LEAST TWO DAYS BEFORE YOU DIG
UNDERGROUND SERVICE ALERT OF SOUTHERN CALIFORNIA

BASIS OF BEARINGS:
BEARINGS SHOWN HEREON ARE BASED ON THE CENTERLINE OF 162 ND STREET (FORMERLY MARKET STREET) BEING N 89° 55' 30" E SHOWN ON TRACT NO. 10901, M.B. 254/31-32

BENCHMARK:
THE CITY OF GARDENA BENCHMARK NO. SD-15 ELEV. = 43.508

CONSULTANT:

PREPARED UNDER THE SUPERVISION OF:

RJM DESIGN GROUP
31591 Camino Capistrano
San Juan Capistrano, CA 92675
www.RJMdesigngroup.com
[949] 493-2690 fax
[949] 493-2600 phone

REVISIONS

NO.	DESCRIPTION	DATE	APPROVED
1	90% CD SUBMITTAL	12/15/2022	
2	100% CD SUBMITTAL	05/01/2023	
3	FINAL SUBMITTAL	10/02/2023	

CITY OF GARDENA
DEPARTMENT OF PUBLIC WORKS - ENGINEERING
CONSTRUCTION DETAILS
COMMUNITY AQUATICS & SENIOR CENTER
L-2.10

	INITAL	DATE
DESIGNED BY	EC	11/14/2022
DRAWN BY	TF	04/20/2023
CHECKED BY	EC	10/02/2023

APPROVED BY:
DATE DIRECTOR OF PUBLIC WORKS

SHT. 25 OF 195 DWG. NO. 5-2606

GENERAL NOTES

DESIGN LOADS

BUILDING CODE	CBC 2019 (BASED ON IBC 2018)
LIVE LOADS	5 PSF
SNOW LOAD	5 PSF
WIND LOADS	115 MPH[1] 3-Sec. Gust, RISK CATEGORY II & EXPOSURE C

1.- 115 MPH ACCORDING THE ULTIMATE WIND SPEED MAPS OF ASCE 7-16 IS EQUIVALENT TO THE NOMINAL WIND SPEED OF 90 MPH ACCORDING ASCE 7-05 AND IBC 2018 EQ 16-33.

STRUCTURAL STEEL

1.- ALL STRUCTURAL SHAPES SHALL BE COLD FORMED HSS ASTM A500 GRADE C, UNLESS OTHERWISE NOTED, TYPICAL MECHANICAL PROPERTIES FOR HSS PRODUCTS:

SQUARE AND RECTANGULAR	50,000 PSI YIELD / 62,000 PSI TENSILE
ROUND PIPE	46,000 PSI YIELD / 62,000 PSI TENSILE

2.- ALL GALVANIZED STEEL TUBE PRODUCTS ARE MANUFACTURED PER ASTM A500, TYPICAL MECHANICAL PROPERTIES ACHIEVED FOR GALVANIZED TUBE PRODUCTS:

ROUND TUBE	45,000 PSI YIELD / 48,000 PSI TENSILE

3.- ALL PLATES SHALL COMPLY WITH ASTM A572 GRADE 50.

4.- ALL STEEL TUBING SHALL BE TRIPLE COATED FOR RUST PROTECTION USING THE IN-LINE ELECTROPLATING COAT PROCESS. TUBING SHALL BE INTERNALLY COATED WITH ZINC AND ORGANIC COATINGS TO PREVENT CORROSION AS MANUFACTURED BY ALLIED TUBE & CONDUIT.

5.- STRUCTURAL STEEL SHALL BE DETAILED, FABRICATED AND ERECTED IN ACCORDANCE WITH A.I.S.C. SPECIFICATIONS.

6.- ALL SHOP WELDS SHALL BE EXECUTED IN ACCORDANCE WITH THE LATEST EDITION OF THE AMERICAN WELDING SOCIETY (AWS) D1.1 SPECIFICATIONS. ALL WELDS SHALL BE CONTINUOUS WHERE LENGTH IS NOT GIVEN, UNLESS OTHERWISE SHOWN OR NOTED ON DRAWINGS. ALL WELDS SHALL DEVELOP THE FULL STRENGTH OF THE WEAKER MEMBER. ALL WELDS SHALL BE MADE USING E70XX .045 WIRE.

7.- SHOP CONNECTIONS SHALL BE WELDED UNLESS NOTED OTHERWISE. FIELD CONNECTIONS SHALL BE AS INDICATED ON THE DRAWINGS (IF REQUIRED). ALL FILLET WELDS SHALL BE A MINIMUN OF 3/16" UNLESS OTHERWISE NOTED. FIELD WELDS SHALL NOT BE ALLOWED.

8.- ALL HIGH STRENGTH BOLTS SHALL COMPLY WITH ASTM A325 TYPE 1 OR A490 TYPE 1. ALL NUTS SHALL COMPLY WITH ASTM A563DH, AND WASHERS SHALL COMPLY WITH ASTM F436.

9.- ALL HIGH STRENGTH BOLTS SHALL BE TIGHTENED TO A SNUG TIGHT CONDITION.

10.- ALL STAINLESS STEEL BOLTS / STUDS SHALL COMPLY WITH ASTM F-593, ALLOY GROUP 1 OR 2 ALL NUTS SHALL COMPLY WITH ASTM F-594 ALLOY GROUP 1 OR 2.

11.- ALL STRUCTURAL STEEL SHALL BE PAINTED WITH ONE SHOP COAT (2.5 TO 3.5 MILS THICK MIN). THIS COAT IS A WEATHER RESISTANT POWDER COATING BASED ON POLYESTER TGIC (MANUFACTURED BY SHERWIN WILLIAMS OR TIGER DRYLAC). TO ACHIEVE OPTIMUM ADHESION, IT IS RECOMMENDED THAT THE PROPER TREATMENT AND DRYING TAKE PLACE BEFORE COATING. POLYESTER POWDER (TGIC) SPECIFICATIONS SHALL BE AS FOLLOWS:

- PENCIL HARDNESS (ASTM D-3363)
- HUMIDITY (ASTM D-2247)
- SOLVENT RESISTANCE (PCI METHOD) - 50 DBL RUBS SL. SOFTNES

FABRIC SPECIFICATION

1.- FABRIC SHALL BE SYNTHESIS COMMERCIAL 95-340FR, A HIGH DENSITY POLYETHYLENE WITH ULTRA VIOLET ADDITIVES, WITH MONOFILAMENT AND TAPE CONSTRUCTION GIVING A STABLE MATERIAL AND LOCK-STITCH KNITTED.

2.- FABRIC SPECIFICATIONS:

	SOLID COLORS
-TEAR STRENGTH	WARP 208 LBS WEFT 496 LBS
- BURST STRENGTH	353 LBS
- FADING	MINIMUM FADING AFTER 5 YEARS
- LIFE EXPECTANCY	A MINIMUM OF 8 YEARS CONTINUOUS EXPOSURE TO THE SUN

3.- FIRE TEST ON FABRIC: ASTM E 84, FLAME SPREAD INDEX 25, SMOKE DEVELOPED INDEX 105.

4.- THREAD-PTFE (TEFLON) USED MEET THE FOLLOWING SPECIFICATIONS: HIGH STRENGTH, LOW SHRINKAGE, WIDE TEMPERATURE RANGE, FLEX & ABRASION RESISTANT AND UV RADIATION IMMUNITY. LOCKSTITCH - 1200 DENIER. CHAINSTITCH THREAD - 2400 DENIER

AIRCRAFT CABLE

1.- WIRE ROPE CABLE SHALL BE 7x19 STRAND CORE GALVANIZED WIRE ROPE WITH A BREAKING STRENGTH VALUE OF 14,400 LBS (3/8" DIAMETER).

2.- CABLES SHALL BE FED THROUGH THE FABRIC SLEEVES AROUND THE PERIMETER OF THE CANOPY AND TENSIONED UNTIL THE FABRIC PANELS (DESIGNED PURPOSELY UNDERSIZED) REACH A TAUNT APPEARANCE. ANY LONG TERM CABLE SAG SHALL BE MINIMIZED DURING THE MAINTENANCE RE-TIGHTENING VISITS AS REQUIRED.

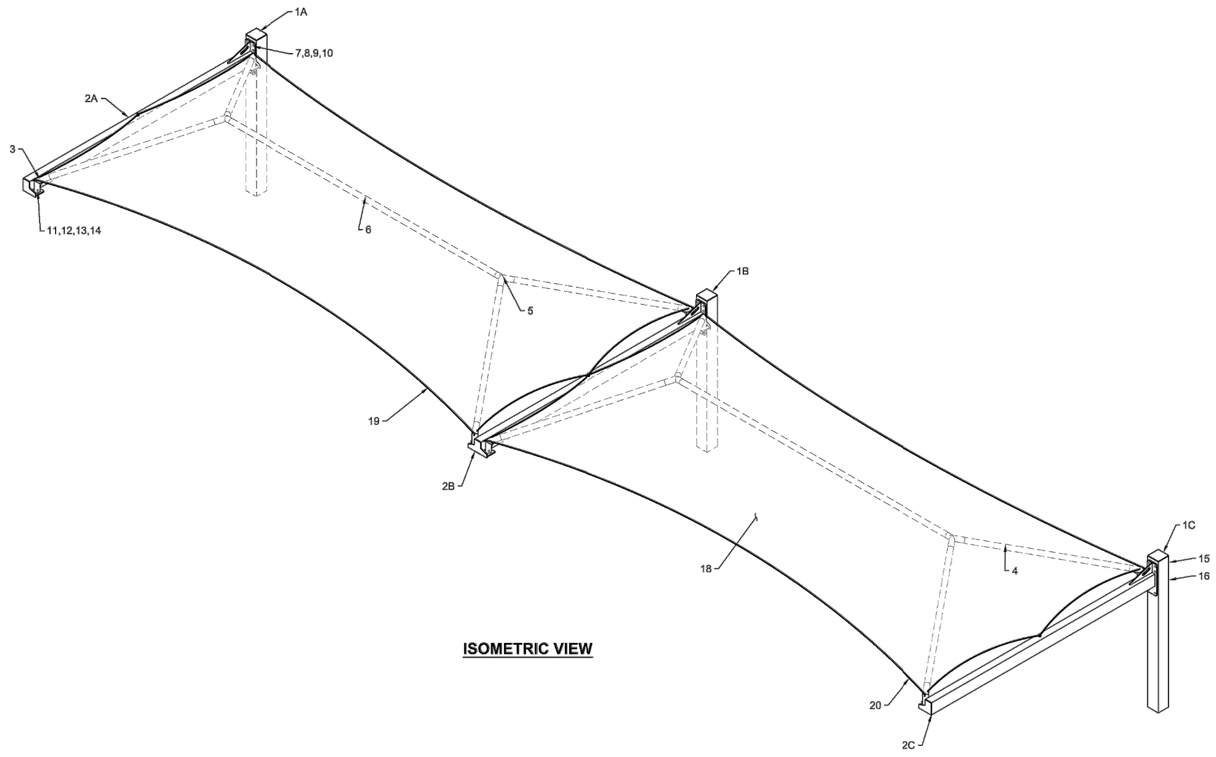

ISOMETRIC VIEW

LIST OF MATERIALS

ITEM	QTY.	DESCRIPTION	MATERIAL / DWG	SMI PART NO.
STEEL AND BOLTS				
1A	1	COLUMN	HSS 10.00 X 10.00 X 0.500	DCANT-BLP-101008-213
1B	1	COLUMN	HSS 10.00 X 10.00 X 0.500	DCANT-BLP-101008-213
1C	1	COLUMN	HSS 10.00 X 10.00 X 0.500	DCANT-BLP-101008-213
2A	1	BEAM (LEFT)	HSS 10.00 X 6.00 X 0.375	FCANTBEAM-106006-182-SIN-350-L-
2B	1	BEAM (CENTER)	HSS 10.00 X 6.00 X 0.375	FCANTBEAM-106006-182-DBL-350-C-
2C	1	BEAM (RIGHT)	HSS 10.00 X 6.00 X 0.375	FCANTBEAM-106006-182-SIN-350-R-
3	8	RAFTER	4.0 GA 8 RD TUBING	400RAF-F5
4	8	EXTENSION	4.0 GA 8 RD TUBING	EXT-400-108
5	4	CROSSPIECE	4.0 GA 8 RD TUBING	400CP-F5
6	2	RIDGE	4.0 GA 8 RD TUBING	RID-400-231
7	18	Ø3/4"-10NC x 13" HEX HEAD BOLT	ASTM A325 GALVANIZED	307984
8	18	Ø3/4"-10NC HEX NUT	ASTM A563 GALVANIZED	307687
9	36	Ø3/4" FLAT WASHER	ASTM F436 GALVANIZED	307624
10	18	Ø3/4" SPLIT LOCK WASHER	ASTM F436 GALVANIZED	307832
11	8	Ø1/2"-13NC x 5" HEX BOLT	ASTM A325 GALVANIZED	309109
12	8	Ø1/2"-13NC HEX NUT	ASTM A563 GALVANIZED	308069
13	16	Ø1/2" FLAT WASHER	ASTM F436 GALVANIZED	307622
14	8	Ø1/2" SPLIT LOCK WASHER	ASTM F436 GALVANIZED	307625
15	3	WASHER PLATE 4 BOLTS	ASTM A572 GR 50	PLT-251
16	3	WASHER PLATE 2 BOLTS	ASTM A572 GR 50	PLT-252
800	18	ANCHOR ROD SET 1-1/4" x 36"	F1554 GR55 (GALVANIZED)	307615
FABRIC AND HARDWARE				
18	2	FABRIC CANT 31'-5" x 15'-2"	COMMERCIAL 95-340 FR	AREA: 476 SQF, WEIGHT: 33 LBS
19	2	110 FT OF Ø3/8" CABLE	GALVANIZED	308175
20	8	Ø3/8" CABLE CLAMP	GALVANIZED	307629

CODE ANALYSIS

BUILDING	OCCUPANCY	CONSTRUCTION TYPE	AREA (SQF)	OCCUPANT LOAD
SHADE STRUCTURE 16' X 65'	U	V-B	1040	N/A

THESE PLANS AND SPECIFICATIONS ARE THE PROPERTY OF USA SHADE AND FABRIC STRUCTURES AND SHALL NOT BE REPRODUCED WITHOUT THEIR WRITTEN PERMISSION.

USASHADE & Fabric Structures

CORPORATE HEADQUARTERS
2580 ESTERS BLVD., SUITE 100
DFW AIRPORT, TX 75261
800-966-5005

CERTIFICATIONS:
IAS CERTIFICATION No: FA-428
CLARK COUNTY MANUFACTURER CERTIFICATION NUMBER (NEVADA): 355

CUSTOMER:
RJM DESIGN GROUP

PROJECT NAME:
GARDENA COMMUNITY AQUATICS & SENIOR CENTER PCSA

LOCATION:
GARDENA CA

PROJECT NUMBER.
83534

STRUCTURE TYPE:
SINGLE JOINED FULL CANTI PRODUCT #302-CUST.

SIZE:
16' X 65' X 15'e

SCALE : AS NOTED

DRAWING SIZE: **B**

REV	DESCRIPTION	DATE	DRW	CHK	ENG
NC	CUSTOM (SIZE)	01/16/23	MMB	MB	MB

Eng. By :	MB	01/16/23
Design By :	MMB	01/16/23
Approved By :	MB	01/16/23

DRAWING DESCRIPTION:
NOTES / LOM

DWG.
83534-1.0

PAGE
1000

REV.
NC

REGISTERED PROFESSIONAL ENGINEER — WILLIAM N. BOWEN II — No. C32642 — Exp 12-31-23 — CIVIL — STATE OF CALIFORNIA

NOTICE

FABRIC TOP NEEDS TO BE REMOVED IF SNOW EXCEEDING 5 PSF IS ANTICIPATED

FABRIC TOP NEEDS TO BE REMOVED IF WINDS EXCEEDING 115 MPH ARE ANTICIPATED, SEE NOTE 1 OF DESIGN LOADS

Digitally signed by William N Bowen II, P.E.
DN: cn=William N Bowen II, P.E., o, ou, email=bbs_consultants@msn.com, c=US
Date: 2023.02.08 12:01:12 -06'00'

1 SINGLE JOINED FULL CANTILEVER SHADE STRUCTURES AT BLEACHERS - NOTES / LIST OF MATERIALS

DIGALERT — DIAL TOLL FREE 1-800-422-4133 AT LEAST TWO DAYS BEFORE YOU DIG — UNDERGROUND SERVICE ALERT OF SOUTHERN CALIFORNIA

BASIS OF BEARINGS:
BEARINGS SHOWN HEREON ARE BASED ON THE CENTERLINE OF 142 ND STREET (FORMERLY MARKET STREET) BEING N 89° 55' 30" E SHOWN ON TRACT NO. 10901, M.B. 254/31-32

BENCHMARK:
THE CITY OF GARDENA BENCHMARK NO. SD-15 ELEV. = 43.508

CONSULTANT:

PREPARED UNDER THE SUPERVISION OF:
RJM DESIGN GROUP
31591 Camino Capistrano
San Juan Capistrano, CA 92675
www.RJMdesigngroup.com
(949) 493-2690 fax
(949) 493-2600 phone

LICENSED LANDSCAPE ARCHITECT — STATE OF CALIFORNIA

REVISIONS

NO.	DESCRIPTION	DATE	APPROVED
1	90% CD SUBMITTAL	12/15/2022	
2	100% CD SUBMITTAL	06/01/2023	
3	FINAL SUBMITTAL	10/02/2023	

CITY OF GARDENA
DEPARTMENT OF PUBLIC WORKS - ENGINEERING
CONSTRUCTION DETAILS
COMMUNITY AQUATICS & SENIOR CENTER
L-2.11

	INITAL	DATE
DESIGNED BY	EC	11/14/2022
DRAWN BY	TF	04/20/2023
CHECKED BY	EC	10/02/2023

APPROVED BY:
DATE
DIRECTOR OF PUBLIC WORKS

SHT. 26 OF 195 DWG. NO. S-2606

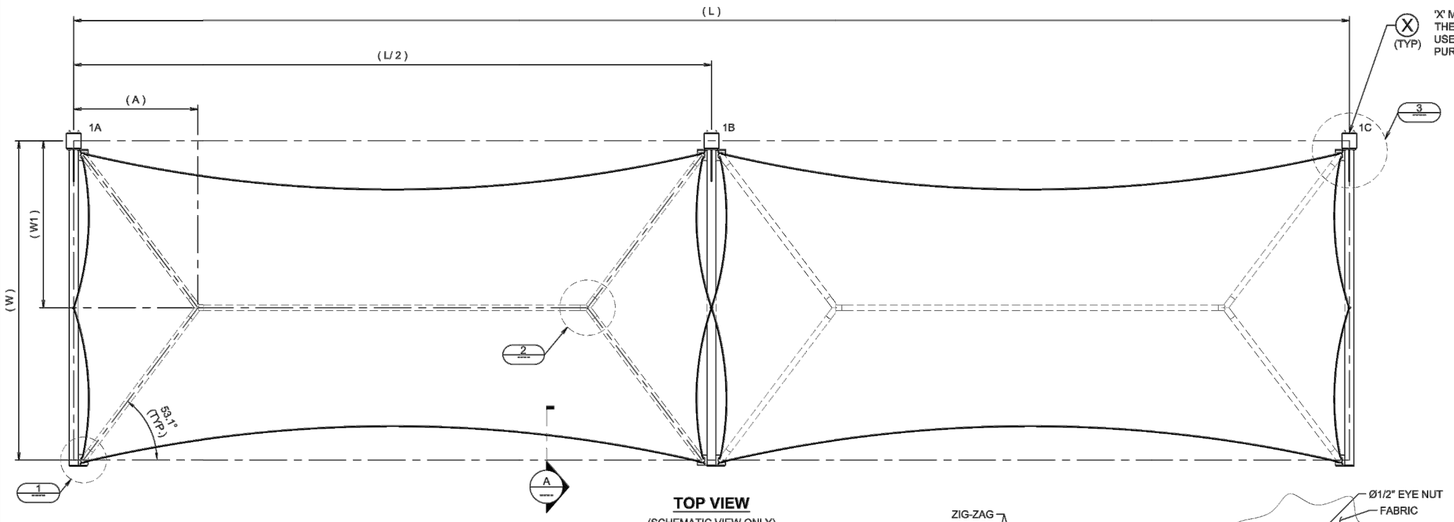

TOP VIEW
(SCHEMATIC VIEW ONLY)

TABLE OF DIMENSIONS							
(L)	(W)	(W1)	(A)	(H)	(C)	(R)	(HT)
65'-0"	16'-0"	8'-5"	6'-3"	15'-0"	16'-9"	3'-11"	18'-11"

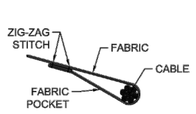

SECTION A-A

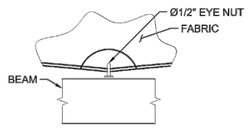

DETAIL 6

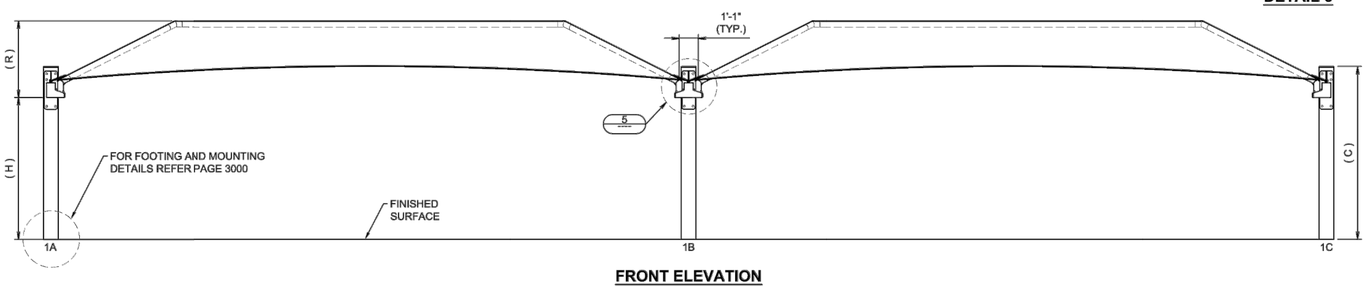

FRONT ELEVATION
(SCHEMATIC VIEW ONLY)

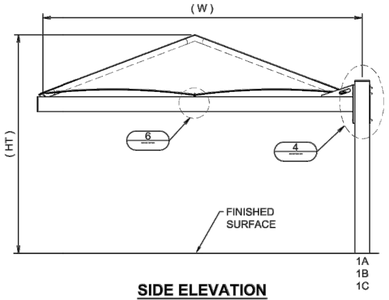

SIDE ELEVATION
(SCHEMATIC VIEW ONLY)

PLAN NORTH

FOR TRUE NORTH
SEE CUSTOMER'S
SITE PLAN

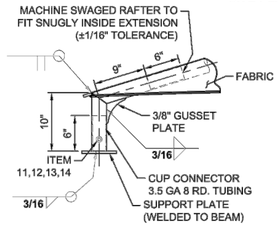

VIEW C-C

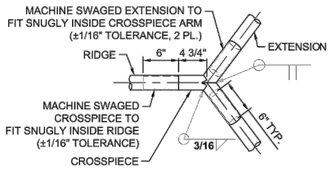

DETAIL 2

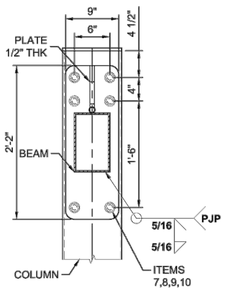

SECTION B-B

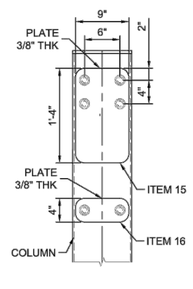

VIEW D-D

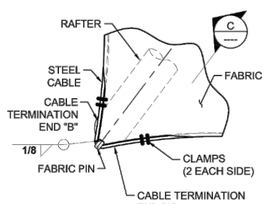

DETAIL 1

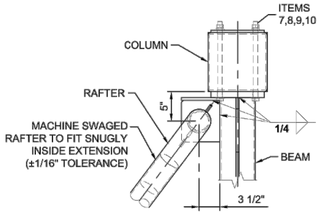

DETAIL 3

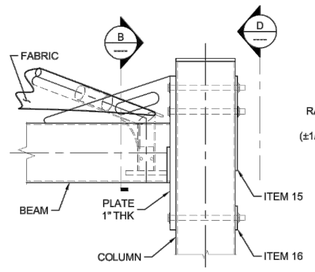

DETAIL 4

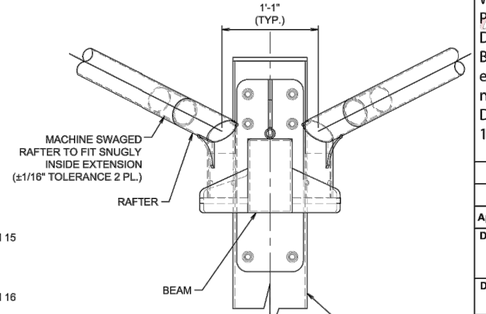

DETAIL 5

THESE PLANS AND SPECIFICATIONS ARE THE PROPERTY OF USA SHADE AND FABRIC STRUCTURES AND SHALL NOT BE REPRODUCED WITHOUT THEIR WRITTEN PERMISSION.

USASHADE & Fabric Structures

CORPORATE HEADQUARTERS
2580 ESTERS BLVD., SUITE 100
DFW AIRPORT, TX 75261
800-966-5005

CERTIFICATIONS:
IAS CERTIFICATION No: FA-428
CLARK COUNTY MANUFACTURER CERTIFICATION NUMBER (NEVADA): 355

CUSTOMER:
RJM DESIGN GROUP

PROJECT NAME:
GARDENA COMMUNITY AQUATICS & SENIOR CENTER PCSA

LOCATION:
GARDENA CA

PROJECT NUMBER.
83534

STRUCTURE TYPE:
SINGLE JOINED FULL CANTI PRODUCT #302-CUST.

SIZE:
16' X 65' X 15'e

SCALE : AS NOTED

DRAWING SIZE: **B**

REGISTERED PROFESSIONAL ENGINEER — WILLIAM N. BOWEN II — No. C32642 — EXP. 06-30-23 — CIVIL — STATE OF CALIFORNIA

Digitally signed by William N Bowen II, P.E.
DN: cn=William N Bowen II, P.E., o, ou, email=bbs_consultants@msn.com, c=US
Date: 2023.02.08 12:01:23 -06'00'

NO.	DESCRIPTION	DATE	APPROVED
1	90% CD SUBMITTAL	12/15/2022	
2	100% CD SUBMITTAL	05/01/2023	
3	FINAL SUBMITTAL	10/02/2023	

	INITIAL	DATE
Eng. By :	MB	01/16/23
Design By :	MMB	01/16/23
Approved By :	MB	01/16/23

DRAWING DESCRIPTION:
VIEWS AND DETAILS

DWG. **83534-1.0**

PAGE **2000**

REV. **NC**

REV	DESCRIPTION	CUSTOM (SIZE)	DATE	INITIAL
NC	01/16/23	MMB	DRW	MB
			CHK	MB
			ENG	

1 | SINGLE JOINED FULL CANTILEVER SHADE STRUCTURES AT BLEACHERS - VIEWS AND DETAILS

DIGALERT — DIAL TOLL FREE 1-800-422-4133 AT LEAST TWO DAYS BEFORE YOU DIG — UNDERGROUND SERVICE ALERT OF SOUTHERN CALIFORNIA

BASIS OF BEARINGS:
BEARINGS SHOWN HEREON ARE BASED ON THE CENTERLINE OF 162 ND STREET (FORMERLY MARKET STREET) BEING N 89° 55' 30" E SHOWN ON TRACT NO. 10901, M.B. 254/31-32

BENCHMARK:
THE CITY OF GARDENA BENCHMARK NO. 5D-15 ELEV. = 43.508

CONSULTANT:

PREPARED UNDER THE SUPERVISION OF:
RJM DESIGN GROUP
31591 Camino Capistrano
San Juan Capistrano, CA 92675
www.RJMdesigngroup.com
[949] 493-2690 fax
[949] 493-2600 phone

REGISTERED LANDSCAPE ARCHITECT — STATE OF CALIFORNIA

CITY OF GARDENA
DEPARTMENT OF PUBLIC WORKS - ENGINEERING
CONSTRUCTION DETAILS
COMMUNITY AQUATICS & SENIOR CENTER
L-2.12

	INITIAL	DATE
DESIGNED BY	EC	11/14/2022
DRAWN BY	TP	04/20/2023
CHECKED BY	EC	10/02/2023

APPROVED BY:
DATE
DIRECTOR OF PUBLIC WORKS

SHT. 27 OF 195 DWG. NO. 5-2606

REINFORCED CONCRETE NOTES

1.- CONCRETE WORK SHALL BE EXECUTED IN ACCORDANCE WITH THE LATEST EDITION OF THE AMERICAN CONCRETE INSTITUTE SPECIFICATION FOR STRUCTURAL CONCRETE ACI 301 AND BUILDING CODE ACI 318.
CONCRETE SPECIFICATIONS, SHALL BE AS FOLLOWS:
- 28 DAY STRENGTH: 2500 PSI
- SLUMP: 3-5
- PORTLAND CEMENT SHALL CONFORM TO C-150
- AGGREGATE SHALL CONFORM TO ASTM C-33

2.- ALL REINFORCEMENT STEEL SHALL CONFORM TO ASTM A-615 GRADE 60; AND SHALL BE DETAILED, FABRICATED AND PLACED IN ACCORDANCE WITH THE LATEST ACI SPECIFICATION FOR STRUCTURAL CONCRETE ACI 301, ACI DETAILING MANUAL AND CRSI MANUAL OF STANDARD PRACTICE.

3.- ALL ANCHOR BOLTS SET IN NEW CONCRETE (WHEN APPLICABLE) SHALL COMPLY WITH ASTM F-1554 GRADE 55 (GALVANIZED).

4.- ALL NON-SHRINK GROUT SHALL HAVE A MINIMUM 28 DAYS COMPRESSIVE STRENGTH OF 5000 PSI, AND SHALL COMPLY THE REQUIREMENTS OF ASTM C109, ASTM C939, ASTM C1090, ASTM C1107, WHEN APPLICABLE.

5.- SOIL PARAMETERS FOR FOOTING ANALYSIS; TABLE 1806.2, CLASS : 5

FLAME RETARDANT

Fabric Registration

LICENSE NUMBER: F-037801

COMMERCIAL NINETYFIVE
340FR

Product Marketed by:

GALE PACIFIC LTD
145 WOODLANDS DRIVE
BRAESIDE, AUSTRAILIA 3195, ,

Issue Date : 04/13/2022
Expiration Date : 08/30/2023

This product meets the minimum requirements of flame resistance established by the California State Fire Marshal for products identified in Section 13115, California Health and Safety Code. The scope of the approved use of this product is provided in the current edition of the CALIFORNIA APPROVED LIST OF FLAME RETARDANT CHEMICALS AND FABRICS, GENERAL AND LIMITED APPLICATIONS CONCERNS published by the California State Fire Marshal.

Issued By Vikkie Franklin
Fire Engineering License Manager
Fire Engineering & Investigations Division

Reviewed and Approved By Patricia Setter
Deputy State Fire Marshal III
Fire Engineering & Investigations Division

OFFICE OF THE STATE FIRE MARSHAL

Please visit calfire.govmotus.org for more information on Licensing and Permitting with CAL FIRE

Page 1 of 1

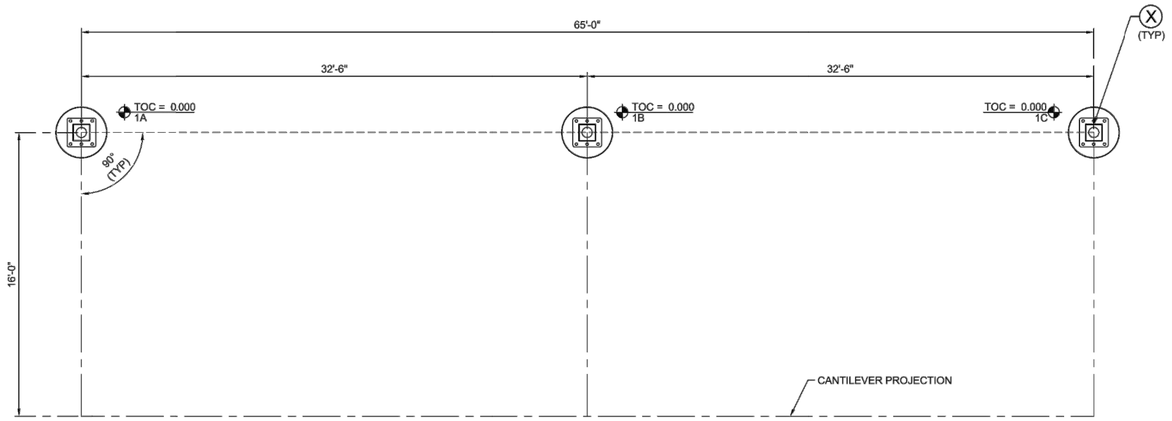

FOUNDATION LOCATION PLAN
(ELEVATIONS ARE IN FEET)
(FIELD VERIFY ALL DIMENSIONS AND ELEVATIONS)

PLAN NORTH

FOR TRUE NORTH SEE CUSTOMER'S SITE PLAN

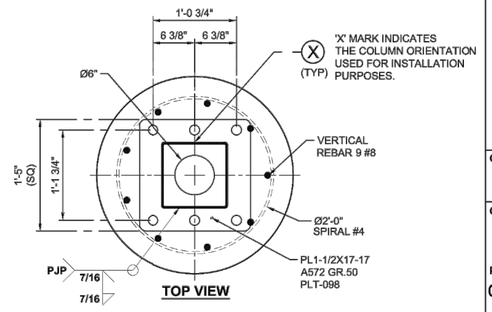

TOP VIEW

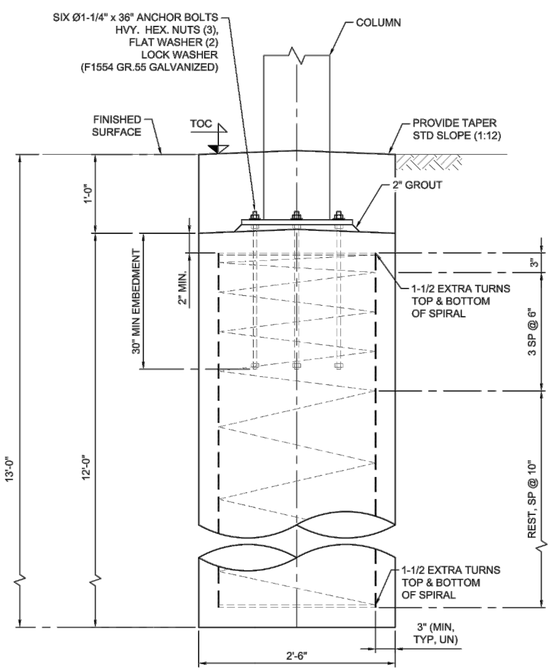

FOOTING TYPE Ø2'-6" X 12'-0" S D
(RBP-RECESSED BASE PLATE)
USE FOR NON-CONSTRAINED CASES

THESE PLANS AND SPECIFICATIONS ARE THE PROPERTY OF USA SHADE AND FABRIC STRUCTURES AND SHALL NOT BE REPRODUCED WITHOUT THEIR WRITTEN PERMISSION.

USASHADE & Fabric Structures

CORPORATE HEADQUARTERS
2580 ESTERS BLVD., SUITE 100
DFW AIRPORT, TX 75261
800-966-5005

CERTIFICATIONS:
IAS CERTIFICATION No: FA-428
CLARK COUNTY MANUFACTURER CERTIFICATION NUMBER (NEVADA): 355

CUSTOMER:
RJM DESIGN GROUP

PROJECT NAME:
GARDENA COMMUNITY AQUATICS & SENIOR CENTER PCSA

LOCATION:
GARDENA
CA

PROJECT NUMBER.
83534

STRUCTURE TYPE:
SINGLE JOINED FULL CANTI
PRODUCT #302-CUST.

SIZE:
16' X 65' X 15'e

SCALE : AS NOTED

DRAWING SIZE: B

REV	DESCRIPTION	DATE	CHK	ENG
NC	CUSTOM (SIZE)	01/16/23	MMB	MB

REGISTERED PROFESSIONAL ENGINEER — WILLIAM N. BOWEN II — No. C32642 — Exp. 9-31-23 — CIVIL — STATE OF CALIFORNIA

Digitally signed by William N Bowen II, P.E.
DN: cn=William N Bowen II, P.E., o, ou, email=bbs_consultants@msn.com, c=US
Date: 2023.02.08 12:01:35 -06'00'

Eng. By :	MB	01/16/23
Design By :	MMB	01/16/23
Approved By :	MB	01/16/23

DRAWING DESCRIPTION:
FOOTING DETAILS

DWG. 83534-1.0

PAGE 3000

REV. NC

1 SINGLE JOINED FULL CANTILEVER SHADE STRUCTURES AT BLEACHERS - FOOTING DETAILS

DIGALERT — DIAL TOLL FREE 1-800-422-4133 AT LEAST TWO DAYS BEFORE YOU DIG — UNDERGROUND SERVICE ALERT OF SOUTHERN CALIFORNIA

BASIS OF BEARINGS:
BEARINGS SHOWN HEREON ARE BASED ON THE CENTERLINE OF 162 ND STREET (FORMERLY MARKET STREET) BEING N 89° 55' 30" E SHOWN ON TRACT NO. 10901, M.B. 254/31-32

BENCHMARK:
THE CITY OF GARDENA BENCHMARK NO. 5D-15 ELEV. = 43.508

CONSULTANT:

PREPARED UNDER THE SUPERVISION OF:
RJM DESIGN GROUP
31591 Camino Capistrano
San Juan Capistrano, CA 92675
www.RJMdesigngroup.com
[949] 493-2690 fax
[949] 493-2600 phone

REGISTERED LANDSCAPE ARCHITECT — STATE OF CALIFORNIA

REVISIONS

NO.	DESCRIPTION	DATE	APPROVED
1	90% CD SUBMITTAL	12/15/2022	
2	100% CD SUBMITTAL	05/01/2023	
3	FINAL SUBMITTAL	10/02/2023	

CITY OF GARDENA
DEPARTMENT OF PUBLIC WORKS - ENGINEERING
CONSTRUCTION DETAILS
COMMUNITY AQUATICS & SENIOR CENTER
L-2.13

	INITAL	DATE	APPROVED BY:
DESIGNED BY	EC	11/14/2022	
DRAWN BY	TP	04/20/2023	
CHECKED BY	EC	10/02/2023	DATE DIRECTOR OF PUBLIC WORKS

SHT. 28 OF 195 DWG. NO. 5-2606

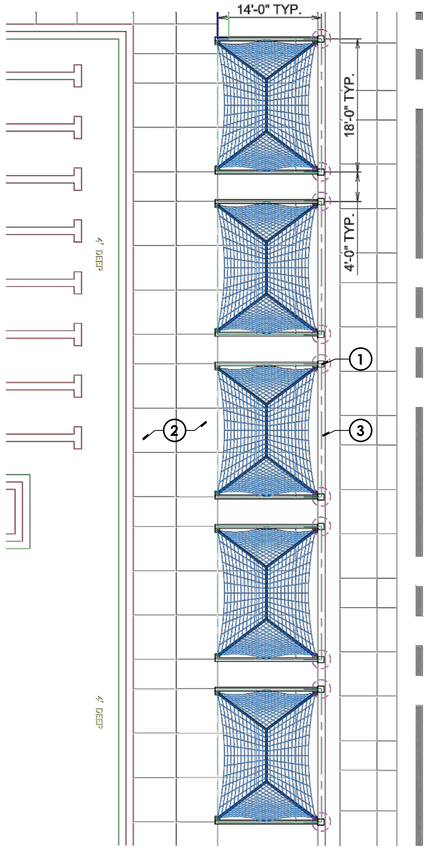

PLAN VIEW

PLAN NORTH

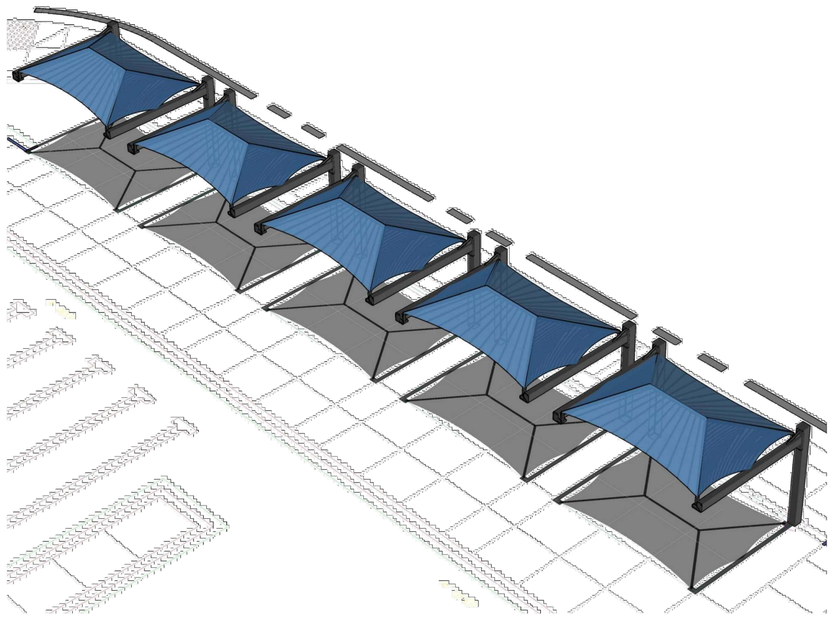

PERSPECTIVE VIEW

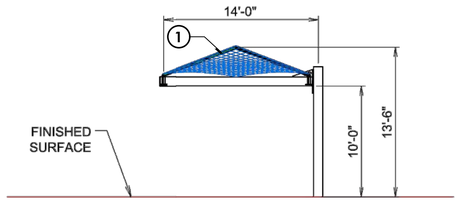

SOUTH ELEVATION

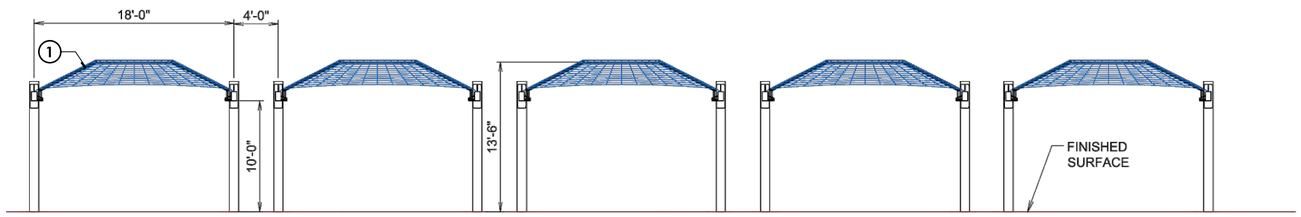

WEST ELEVATION

NOTES:
-THESE DRAWINGS ARE A PICTORIAL REPRESENTATION OF FABRIC AND STEEL ONLY. NONE OF THE REQUIRED ATTACHMENT OR CONNECTION DETAILS HAVE BEEN DEPICTED.
-ALL DIMENSIONS AND HEIGHTS MUST BE FIELD VERIFIED PRIOR TO ANY FINAL DESIGN, FABRICATION OR INSTALLATION WORK.

As manufactured and installed by USA SHADE & Fabric Structures
Contact: Devin Christensen; (949) 929-8173, (800) 966-5005
Email: devin.christensen@usa-shade.com

CUSTOMER:
RJM DESIGN GROUP

PROJECT NAME:
GARDENA COMMUNITY AQUATICS & SR. CTR.

LOCATION:
LA SALLE AVE & W 160th ST
GARDENA, CA 90247

STRUCTURE TYPE:
FULL CANTI HIP
QTY. 5

SIZE:
14' X 18' X 10'e

THESE PLANS AND SPECIFICATIONS ARE THE PROPERTY OF USA SHADE AND FABRIC STRUCTURES AND SHALL NOT BE REPRODUCED WITHOUT THEIR WRITTEN PERMISSION.

USA SHADE & Fabric Structures®
CORPORATE HEADQUARTERS
2580 ESTERS BLVD., SUITE 100
DFW AIRPORT, TX 75261
800-966-5005

CERTIFICATIONS:
IAS CERTIFICATION No: FA-428
CLARK COUNTY MANUFACTURER CERTIFICATION NUMBER (NEVADA): 355

DESCRIPTION	DATE	DRW	CHK	ENG

REV	DESCRIPTION	DATE	DRW	CHK	ENG

Drawn By :	AZR	08/09/22
Checked By :	AZR	08/09/22
Approved By :	AZR	08/09/22

DRAWING DESCRIPTION:
STRUCTURE 2

DWG.
CON-AUG-015-22

PAGE
1002

REV.

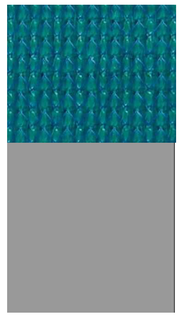

IMAGES FOR REFERENCE ONLY
SCALE: N.T.S.

LEGEND:

1. INSTALL (5) 18'X14' FULL HIP CANTILEVER SHADE STRUCTURES BY: USA SHADE. CONTACT: DEVIN CHRISTENSEN AT (714) 427-6981. INSTALL PER MANUFACTURER'S RECOMMENDATIONS AND SPECIFICATIONS. LOCATION AS SHOWN ON LANDSCAPE CONSTRUCTION PLAN, SHEET L-1.02.
2. ADJACENT CONCRETE POOL DECK PAVING PER CONSTRUCTION PLAN, SEE SHEET L-1.01 AND DETAIL 2, SHEET L-2.02.
3. ADJACENT PERIMETER WALL. SEE DETAIL 2, SHEET L-2.02 FOR WALL CONDITION AT SHADE STRUCTURE POSTS. SEE CONSTRUCTION PLAN, SHEET L-1.02 FOR LOCATIONS.

NOTES:

A. ALL STEEL EDGES TO BE ROUNDED SMOOTH TO PREVENT FABRIC DAMAGE.
B. ALL STEEL POSTS AND STEEL TUBING COMPONENTS TO RECEIVE POLYESTER POWDER-COAT FINISH, COLOR: 'TELE-GRAY' (15892). FINAL COLOR TO BE SELECTED & APPROVED BY CITY.
C. FABRIC HDPE SHADE CLOTH SHALL BE COLOR: 'TURQUOISE'. FINAL COLOR TO BE SELECTED & APPROVED BY CITY. CONTRACTOR TO SUBMIT SCALED SHOP DRAWINGS/SAMPLES PRIOR TO ACQUISITION AND INSTALLATION FOR REVIEW AND APPROVAL.
D. ALL HAND HOLDS TO HAVE REINFORCED EDGING AND REMOVABLE ACCESS PANELS.
E. STRUCTURAL ENGINEERING FOR SHADE STRUCTURE(S) PROVIDED BY: USA SHADE. CONTACT: DEVIN CHRISTENSEN AT (949) 929-8173. SEE SHEETS L-2.15 - L-2.17 FOR STRUCTURAL ENGINEERING PLANS AND PROVIDED STRUCTURAL CALCULATIONS BY STATE OF CALIFORNIA LICENSED STRUCTURAL ENGINEER.
F. FOOTINGS SHALL BE DESIGNED TO IMPEDE IN NO WAY AND IMPART AND/OR TRANSFER NO LOADS OR FORCES ONTO ADJACENT CONSTRUCTION IMPROVEMENTS (SEAT WALLS, RETAINING WALLS, CONCRETE PAVING, PAVERS, PILASTERS, SITE FURNISHINGS, ETC.)

SHADE STRUCTURE BASIS OF DESIGN ENGINEERED BY USA SHADE. CONTACT: DEVIN CHRISTENSEN AT (949) 929-8173.

1 SINGLE FULL CANTILEVER SHADE STRUCUTRES

DIGALERT
DIAL TOLL FREE
1-800-422-4133
AT LEAST TWO DAYS BEFORE YOU DIG
UNDERGROUND SERVICE ALERT OF SOUTHERN CALIFORNIA

BASIS OF BEARINGS:
BEARINGS SHOWN HEREON ARE BASED ON THE CENTERLINE OF 162 ND STREET (FORMERLY MARKET STREET) BEING N 89° 55' 30" E SHOWN ON TRACT NO. 10901, M.B. 254/31-32

BENCHMARK:
THE CITY OF GARDENA BENCHMARK NO. 5D-15 ELEV. = 43.508

CONSULTANT:

PREPARED UNDER THE SUPERVISION OF:
RJM DESIGN GROUP
31591 Camino Capistrano
San Juan Capistrano, CA 92675
www.RJMdesigngroup.com
[949] 493-2690 fax
[949] 493-2600 phone

REVISIONS

NO.	DESCRIPTION	DATE	APPROVED
1	90% CD SUBMITTAL	12/15/2022	
2	100% CD SUBMITTAL	05/01/2023	
3	FINAL SUBMITTAL	10/02/2023	

CITY OF GARDENA
DEPARTMENT OF PUBLIC WORKS - ENGINEERING
CONSTRUCTION DETAILS
COMMUNITY AQUATICS & SENIOR CENTER
L-2.14

	INITIAL	DATE
DESIGNED BY	EC	11/14/2022
DRAWN BY	TP	06/20/2023
CHECKED BY	EC	10/02/2023

APPROVED BY:
DATE
DIRECTOR OF PUBLIC WORKS

SHT. 29 OF 195 DWG. NO. 5-2606

GENERAL NOTES

DESIGN LOADS

BUILDING CODE	CBC 2019 (BASED ON IBC 2018)
LIVE LOADS	5 PSF
SNOW LOAD	5 PSF
WIND LOADS	115 MPH[1] 3-Sec. Gust, RISK CATEGORY II & EXPOSURE C

1.- 115 MPH ACCORDING THE ULTIMATE WIND SPEED MAPS OF ASCE 7-16 IS EQUIVALENT TO THE NOMINAL WIND SPEED OF 90 MPH ACCORDING ASCE 7-05 AND IBC 2018 EQ 16-33.

STRUCTURAL STEEL

1.- ALL STRUCTURAL SHAPES SHALL BE COLD FORMED HSS ASTM A500 GRADE C, UNLESS OTHERWISE NOTED, TYPICAL MECHANICAL PROPERTIES FOR HSS PRODUCTS:

SQUARE AND RECTANGULAR	50,000 PSI YIELD / 62,000 PSI TENSILE
ROUND PIPE	46,000 PSI YIELD / 62,000 PSI TENSILE

2.- ALL GALVANIZED STEEL TUBE PRODUCTS ARE MANUFACTURED PER ASTM A500, TYPICAL MECHANICAL PROPERTIES ACHIEVED FOR GALVANIZED TUBE PRODUCTS:

ROUND TUBE	45,000 PSI YIELD / 48,000 PSI TENSILE

3.- ALL PLATES SHALL COMPLY WITH ASTM A572 GRADE 50.

4.- ALL STEEL TUBING SHALL BE TRIPLE COATED FOR RUST PROTECTION USING THE IN-LINE ELECTROPLATING COAT PROCESS. TUBING SHALL BE INTERNALLY COATED WITH ZINC AND ORGANIC COATINGS TO PREVENT CORROSION AS MANUFACTURED BY ALLIED TUBE & CONDUIT.

5.- STRUCTURAL STEEL SHALL BE DETAILED, FABRICATED AND ERECTED IN ACCORDANCE WITH A.I.S.C. SPECIFICATIONS.

6.- ALL SHOP WELDS SHALL BE EXECUTED IN ACCORDANCE WITH THE LATEST EDITION OF THE AMERICAN WELDING SOCIETY (AWS) D1.1 SPECIFICATIONS. ALL WELDS SHALL BE CONTINUOUS WHERE LENGTH IS NOT GIVEN, UNLESS OTHERWISE SHOWN OR NOTED ON DRAWINGS. ALL WELDS SHALL DEVELOP THE FULL STRENGTH OF THE WEAKER MEMBER. ALL WELDS SHALL BE MADE USING E70XX .045 WIRE.

7.- SHOP CONNECTIONS SHALL BE WELDED UNLESS NOTED OTHERWISE. FIELD CONNECTIONS SHALL BE AS INDICATED ON THE DRAWINGS (IF REQUIRED). ALL FILLET WELDS SHALL BE A MINIMUM OF 3/16" UNLESS OTHERWISE NOTED. FIELD WELDS SHALL NOT BE ALLOWED.

8.- ALL HIGH STRENGTH BOLTS SHALL COMPLY WITH ASTM A325 TYPE 1 OR A490 TYPE 1. ALL NUTS SHALL COMPLY WITH ASTM A563DH, AND WASHERS SHALL COMPLY WITH ASTM F436.

9.- ALL HIGH STRENGTH BOLTS SHALL BE TIGHTENED TO A SNUG TIGHT CONDITION.

10.- ALL STAINLESS STEEL BOLTS / STUDS SHALL COMPLY WITH ASTM F-593, ALLOY GROUP 1 OR 2 ALL NUTS SHALL COMPLY WITH ASTM F-594 ALLOY GROUP 1 OR 2.

11.- ALL STRUCTURAL STEEL SHALL BE PAINTED WITH ONE SHOP COAT (2.5 TO 3.5 MILS THICK MIN), THIS COAT IS A WEATHER RESISTANT POWDER COATING BASED ON POLYESTER TGIC (MANUFACTURED BY SHERWIN WILLIAMS OR TIGER DRYLAC). TO ACHIEVE OPTIMUM ADHESION, IT IS RECOMMENDED THAT THE PROPER TREATMENT AND DRYING TAKE PLACE BEFORE COATING. POLYESTER POWDER (TGIC) SPECIFICATIONS SHALL BE AS FOLLOWS:

- PENCIL HARDNESS (ASTM D-3363)
- HUMIDITY (ASTM D-2247)
- SOLVENT RESISTANCE (PCI METHOD) - 50 DBL RUBS SL. SOFTNES

FABRIC SPECIFICATION

1.- FABRIC SHALL BE SYNTHESIS COMMERCIAL 95-340FR, A HIGH DENSITY POLYETHYLENE WITH ULTRA VIOLET ADDITIVES, WITH MONOFILAMENT AND TAPE CONSTRUCTION GIVING A STABLE MATERIAL AND LOCK-STITCH KNITTED.

2.- FABRIC SPECIFICATIONS:

	SOLID COLORS
-TEAR STRENGTH	WARP 208 LBS WEFT 486 LBS
- BURST STRENGTH	353 LBS
- FADING	MINIMUM FADING AFTER 5 YEARS
- LIFE EXPECTANCY	A MINIMUM OF 8 YEARS CONTINUOUS EXPOSURE TO THE SUN

3.- FIRE TEST ON FABRIC: ASTM E 84, FLAME SPREAD INDEX 25, SMOKE DEVELOPED INDEX 105.

4.- THREAD-PTFE (TEFLON) USED MEET THE FOLLOWING SPECIFICATIONS: HIGH STRENGTH, LOW SHRINKAGE, WIDE TEMPERATURE RANGE, FLEX & ABRASION RESISTANT AND UV RADIATION IMMUNITY. LOCKSTITCH - 1200 DENIER. CHAINSTITCH THREAD - 2400 DENIER

AIRCRAFT CABLE

1.- WIRE ROPE CABLE SHALL BE 7x19 STRAND CORE GALVANIZED WIRE ROPE WITH A BREAKING STRENGTH VALUE OF 7,000 LBS (1/4" DIAMETER).

2.- CABLES SHALL BE FED THROUGH THE FABRIC SLEEVES AROUND THE PERIMETER OF THE CANOPY AND TENSIONED UNTIL THE FABRIC PANELS (DESIGNED PURPOSELY UNDERSIZED) REACH A TAUNT APPEARANCE. ANY LONG TERM CABLE SAG SHALL BE MINIMIZED DURING THE MAINTENANCE RE-TIGHTENING VISITS AS REQUIRED.

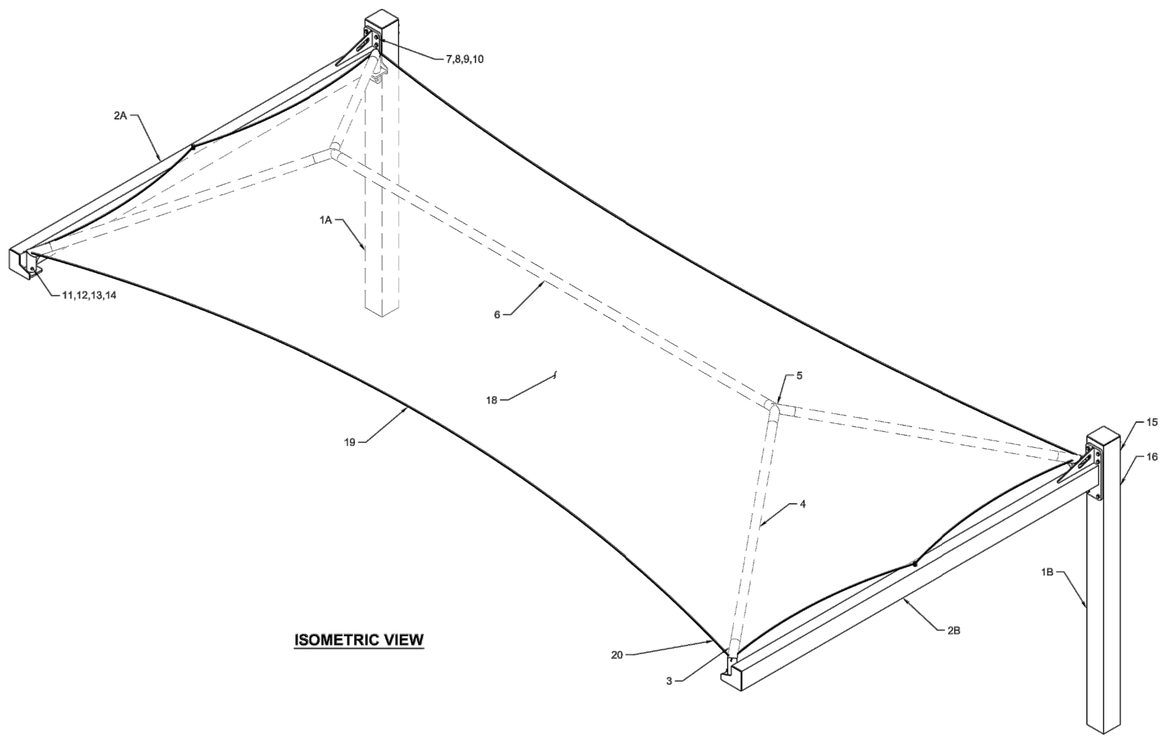

ISOMETRIC VIEW

LIST OF MATERIALS

ITEM	QTY.	DESCRIPTION	MATERIAL / DWG	SMI PART NO.
STEEL AND BOLTS				
1A	1	COLUMN	HSS 10.00 X 10.00 X 0.250	DCANT-BLP-101004-151
1B	1	COLUMN	HSS 10.00 X 10.00 X 0.250	DCANT-BLP-101004-151
2A	1	BEAM (LEFT)	HSS 8.00 X 6.00 X 0.250	FB806004-158-219SNL-
2B	1	BEAM (RIGHT)	HSS 8.00 X 6.00 X 0.250	FB806004-158-219SNR-
3	4	RAFTER	2.50 GA 11 RD. TUBING	250RAF-F5
4	4	EXTENSION	2.50 GA 11 RD. TUBING	EXT-250-92
5	2	CROSSPIECE	2.50 GA 11 RD. TUBING	250CP-F5
6	1	RIDGE	2.50 GA 11 RD. TUBING	RID-250-75
7	12	Ø3/4"-10NC x 13" HEX HEAD BOLT	ASTM A325 (GALVANIZED)	307984
8	12	Ø3/4"-10NC HEX NUT	ASTM A563 (GALVANIZED)	307687
9	24	Ø3/4" FLAT WASHER	ASTM F436 (GALVANIZED)	307624
10	12	Ø3/4" SPLIT LOCK WASHER	ASTM F436 (GALVANIZED)	307832
11	4	Ø3/8"-16NC x 3 1/2" HEX BOLT	ASTM A325 (GALVANIZED)	309110
12	4	Ø3/8"-16NC HEX NUT	ASTM A563 (GALVANIZED)	308256
13	8	Ø3/8" FLAT WASHER	ASTM F436 (GALVANIZED)	308257
14	4	Ø3/8" SPLIT LOCK WASHER	ASTM F436 (GALVANIZED)	308314
15	2	WASHER PLATE 4 BOLTS	ASTM A572 GR 50	PLT-251
16	2	WASHER PLATE 2 BOLTS	ASTM A572 GR 50	PLT-252
800	8	ANCHOR ROD SET 1-1/4" x 36"	F1554 GR55 (GALVANIZED)	307615
FABRIC AND HARDWARE				
18	1	FABRIC CANT 16'-11" x 13'-2"	COMMERCIAL 95-340FR	AREA: 222.7 SQF, WEIGHT: 16 LBS
19	1	80 FT OF 1/4 STEEL CABLE	GALVANIZED CABLE	307604
20	4	1/4" CABLE CLAMP	GALVANIZED	307633

NOTICE

FABRIC TOP NEEDS TO BE REMOVED IF SNOW EXCEEDING 5 PSF IS ANTICIPATED

FABRIC TOP NEEDS TO BE REMOVED IF WINDS EXCEEDING 115 MPH ARE ANTICIPATED, SEE NOTE 1 OF DESIGN LOADS

REGISTERED PROFESSIONAL ENGINEER — WILLIAM N. BOWEN II — No. C32642 — Exp. 6-31-23 — CIVIL — STATE OF CALIFORNIA

Digitally signed by William N Bowen II, P.E.
DN: cn=William N Bowen II, P.E., o, ou, email=bbs_consultants@msn.com, c=US
Date: 2023.02.08 12:02:02 -06'00'

CODE ANALYSIS

BUILDING	OCCUPANCY	CONSTRUCTION TYPE	AREA (SQF)	OCCUPANT LOAD
SHADE UNIT 1.0 14' x 18'	U	V-B	252	N/A

THESE PLANS AND SPECIFICATIONS ARE THE PROPERTY OF USA SHADE AND FABRIC STRUCTURES AND SHALL NOT BE REPRODUCED WITHOUT THEIR WRITTEN PERMISSION.

USASHADE & Fabric Structures

CORPORATE HEADQUARTERS
2580 ESTERS BLVD., SUITE 100
DFW AIRPORT, TX 75261
800-966-5005

CERTIFICATIONS:
IAS CERTIFICATION No: FA-428
CLARK COUNTY MANUFACTURER CERTIFICATION NUMBER (NEVADA): 355

CUSTOMER:
RJM DESIGN GROUP

PROJECT NAME:
GARDENA COMMUNITY AQUATICS & SENIOR CENTER PCSA

LOCATION:
GARDENA CA

PROJECT NUMBER.
83534

STRUCTURE TYPE:
SINGLE FULL CANTILEVER PRODUCT #202.5

SIZE:
14' X 18' X 10'e

SCALE : AS NOTED

DRAWING SIZE: B

NC	RELEASE FOR CONSTRUCTION	01/16/23	MMB	MB	MB
REV	DESCRIPTION	DATE	DRW	CHK	ENG

Eng. By :	MB	01/16/23
Design By :	MMB	01/16/23
Approved By :	MB	01/16/23

DRAWING DESCRIPTION:
NOTES / LOM

DWG. 83534-2.0

PAGE 1000

REV. NC

1 SINGLE FULL CANTILEVER SHADE STRUCUTRES - NOTES / LIST OF MATERIALS

DIGALERT — DIAL TOLL FREE 1-800-422-4133 AT LEAST TWO DAYS BEFORE YOU DIG — UNDERGROUND SERVICE ALERT OF SOUTHERN CALIFORNIA

BASIS OF BEARINGS:
BEARINGS SHOWN HEREON ARE BASED ON THE CENTERLINE OF 162 ND STREET (FORMERLY MARKET STREET) BEING N 89° 55' 30" E SHOWN ON TRACT NO. 10901, M.B. 254/31-32

BENCHMARK:
THE CITY OF GARDENA BENCHMARK NO. 5D-15 ELEV. = 43.508

CONSULTANT:

PREPARED UNDER THE SUPERVISION OF:
RJM DESIGN GROUP
31591 Camino Capistrano
San Juan Capistrano, CA 92675
www.RJMdesigngroup.com
[949] 493-2690 fax
[949] 493-2600 phone

REGISTERED LANDSCAPE ARCHITECT — STATE OF CALIFORNIA — 07/30/2023 — 06/06/2023

REVISIONS

NO.	DESCRIPTION	DATE	APPROVED
1	90% CD SUBMITTAL	12/15/2022	
2	100% CD SUBMITTAL	05/01/2023	
3	FINAL SUBMITTAL	10/02/2023	

CITY OF GARDENA
DEPARTMENT OF PUBLIC WORKS - ENGINEERING

CONSTRUCTION DETAILS

COMMUNITY AQUATICS & SENIOR CENTER
L-2.15

	INITAL	DATE
DESIGNED BY	EC	11/14/2022
DRAWN BY	TP	04/20/2023
CHECKED BY	EC	10/02/2023

APPROVED BY:

DATE DIRECTOR OF PUBLIC WORKS

SHT. 30 OF 195 DWG. NO. 5-2606

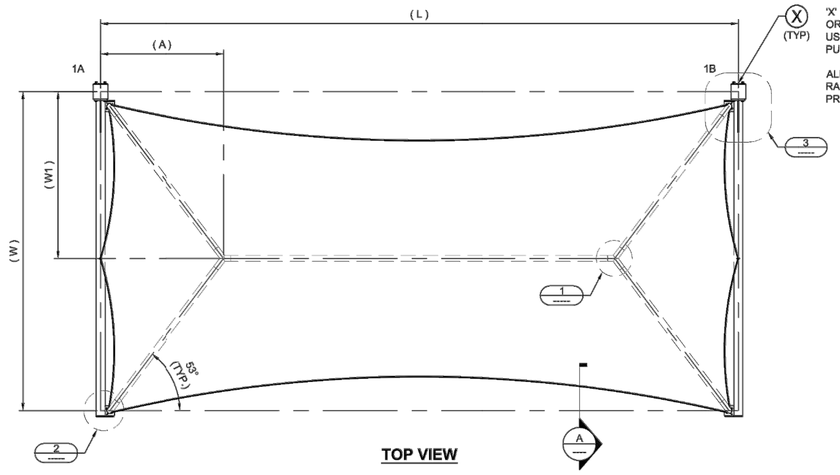

TOP VIEW

'X' MARK INDICATES THE COLUMN ORIENTATION USED FOR INSTALLATION PURPOSES.

ALIGN COLUMN WITH RAFTER/BEAM/EXTENSION PROJECTION.

TABLE OF DIMENSIONS							
(L)	(W)	(W1)	(A)	(H)	(C)	(R)	(HT)
18'-0"	14'-0"	7'-5"	5'-5"	10'-0"	11'-6"	3'-7"	13'-7"

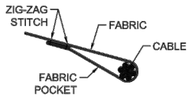

SECTION A-A

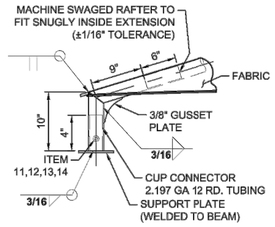

VIEW B-B

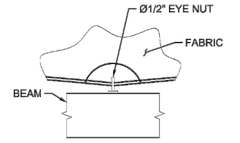

DETAIL 5

PLAN NORTH

FOR TRUE NORTH SEE CUSTOMER'S SITE PLAN

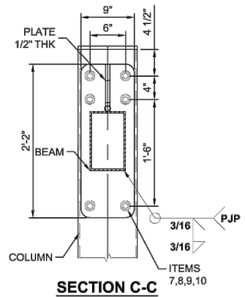

SECTION C-C

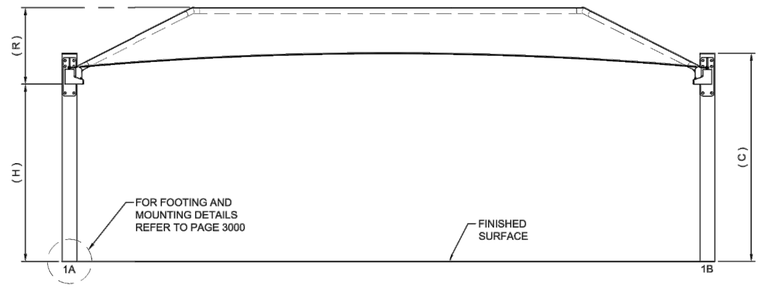

FRONT ELEVATION

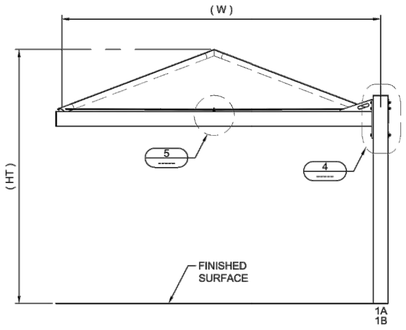

SIDE ELEVATION

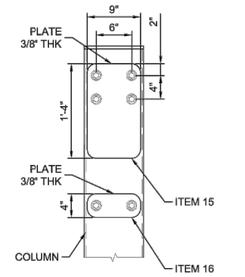

VIEW D-D

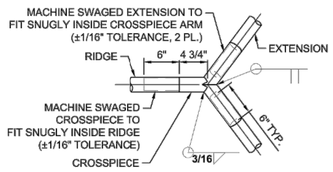

DETAIL 1

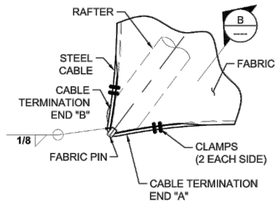

DETAIL 2

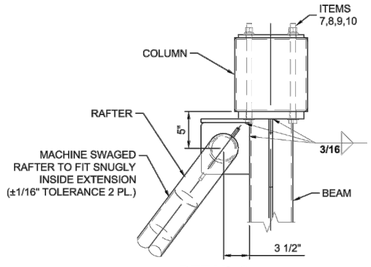

DETAIL 3

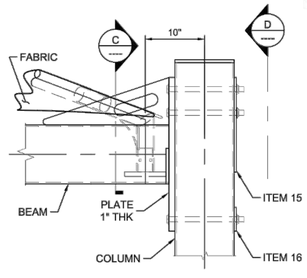

DETAIL 4

THESE PLANS AND SPECIFICATIONS ARE THE PROPERTY OF USA SHADE AND FABRIC STRUCTURES AND SHALL NOT BE REPRODUCED WITHOUT THEIR WRITTEN PERMISSION.

USASHADE & Fabric Structures

CORPORATE HEADQUARTERS
2580 ESTERS BLVD., SUITE 100
DFW AIRPORT, TX 75261
800-966-5005

CERTIFICATIONS:
IAS CERTIFICATION No: FA-428
CLARK COUNTY MANUFACTURER CERTIFICATION NUMBER (NEVADA): 355

CUSTOMER:
RJM DESIGN GROUP

PROJECT NAME:
GARDENA COMMUNITY AQUATICS & SENIOR CENTER PCSA

LOCATION:
GARDENA CA

PROJECT NUMBER.
83534

STRUCTURE TYPE:
SINGLE FULL CANTILEVER PRODUCT #202.5

SIZE:
14' X 18' X 10'e

SCALE : AS NOTED

DRAWING SIZE: **B**

NO.	DESCRIPTION	DATE	APPROVED
1	90% CD SUBMITTAL	12/15/2022	
2	100% CD SUBMITTAL	05/01/2023	
3	FINAL SUBMITTAL	10/02/2023	

REV	NC	RELEASE FOR CONSTRUCTION DESCRIPTION	01/16/23 DATE	MMB DRW	MB CHK	MB ENG

Digitally signed by William N Bowen II, P.E.
DN: cn=William N Bowen II, P.E., o, ou, email=bbs_consultants@msn.com, c=US
Date: 2023.02.08 12:02:15 -06'00'

Eng. By :	MB	01/16/23
Design By :	MMB	01/16/23
Approved By :	MB	01/16/23

DRAWING DESCRIPTION:
VIEWS AND DETAILS

DWG. **83534-2.0**

PAGE **2000**

REV. **NC**

1 | SINGLE FULL CANTILEVER SHADE STRUCUTRES - VIEWS AND DETAILS

DIGALERT
DIAL TOLL FREE
1-800-422-4133
AT LEAST TWO DAYS BEFORE YOU DIG
UNDERGROUND SERVICE ALERT OF SOUTHERN CALIFORNIA

BASIS OF BEARINGS:
BEARINGS SHOWN HEREON ARE BASED ON THE CENTERLINE OF 162 ND STREET (FORMERLY MARKET STREET) BEING N 89° 55' 30" E SHOWN ON TRACT NO. 10901, M.B. 254/31-32

BENCHMARK:
THE CITY OF GARDENA BENCHMARK NO. 5D-15 ELEV. = 43.508

CONSULTANT:

PREPARED UNDER THE SUPERVISION OF:
RJM DESIGN GROUP
31591 Camino Capistrano
San Juan Capistrano, CA 92675
www.RJMdesigngroup.com
[949] 493-2690 fax
[949] 493-2600 phone

REGISTERED LANDSCAPE ARCHITECT — STATE OF CALIFORNIA — 01/16/2023 — 01/16/2023

REVISIONS

NO.	DESCRIPTION	DATE	APPROVED
1	90% CD SUBMITTAL	12/15/2022	
2	100% CD SUBMITTAL	05/01/2023	
3	FINAL SUBMITTAL	10/02/2023	

CITY OF GARDENA
DEPARTMENT OF PUBLIC WORKS - ENGINEERING
CONSTRUCTION DETAILS
COMMUNITY AQUATICS & SENIOR CENTER
L-2.16

	INITAL	DATE	APPROVED BY:
DESIGNED BY	EC	11/14/2022	
DRAWN BY	TP	04/20/2023	DATE — DIRECTOR OF PUBLIC WORKS
CHECKED BY	EC	10/02/2023	

SHT. 31 OF 195 DWG. NO. 5-2606

REINFORCED CONCRETE NOTES

1.- CONCRETE WORK SHALL BE EXECUTED IN ACCORDANCE WITH THE LATEST EDITION OF THE AMERICAN CONCRETE INSTITUTE SPECIFICATION FOR STRUCTURAL CONCRETE ACI 301 AND BUILDING CODE ACI 318.
CONCRETE SPECIFICATIONS, SHALL BE AS FOLLOWS:
- 28 DAY STRENGTH: 2500 PSI
- SLUMP: 3-5
- PORTLAND CEMENT SHALL CONFORM TO C-150
- AGGREGATE SHALL CONFORM TO ASTM C-33

2.- ALL REINFORCEMENT STEEL SHALL CONFORM TO ASTM A-615 GRADE 60; AND SHALL BE DETAILED, FABRICATED AND PLACED IN ACCORDANCE WITH THE LATEST ACI SPECIFICATION FOR STRUCTURAL CONCRETE ACI 301, ACI DETAILING MANUAL AND CRSI MANUAL OF STANDARD PRACTICE.

3.- ALL ANCHOR BOLTS SET IN NEW CONCRETE (WHEN APPLICABLE) SHALL COMPLY WITH ASTM F-1554 GRADE 55 (GALVANIZED).

4.- ALL NON-SHRINK GROUT SHALL HAVE A MINIMUM 28 DAYS COMPRESSIVE STRENGTH OF 5000 PSI, AND SHALL COMPLY THE REQUIREMENTS OF ASTM C109, ASTM C939, ASTM C1090, ASTM C1107, WHEN APPLICABLE.

5.- SOIL PARAMETERS FOR FOOTING ANALYSIS; TABLE 1806.2, CLASS : 5

FLAME RETARDANT

Fabric Registration

LICENSE NUMBER: F-037801

COMMERCIAL NINETYFIVE
340FR

Product Marketed by:

GALE PACIFIC LTD
145 WOODLANDS DRIVE
BRAESIDE, AUSTRAILIA 3195, ,

Issue Date : 04/13/2022
Expiration Date : 08/30/2023

This product meets the minimum requirements of flame resistance established by the California State Fire Marshal for products identified in Section 13115, California Health and Safety Code. The scope of the approved use of this product is provided in the current edition of the CALIFORNIA APPROVED LIST OF FLAME RETARDANT CHEMICALS AND FABRICS, GENERAL AND LIMITED APPLICATIONS CONCERNS published by the California State Fire Marshal.

Issued By Vikkie Franklin
Fire Engineering License Manager
Fire Engineering & Investigations Division

Reviewed and Approved By Patricia Setter
Deputy State Fire Marshal III
Fire Engineering & Investigations Division

OFFICE OF THE STATE FIRE MARSHAL

Please visit calfire.govmotus.org for more information on Licensing and Permitting with CAL FIRE

Page 1 of 1

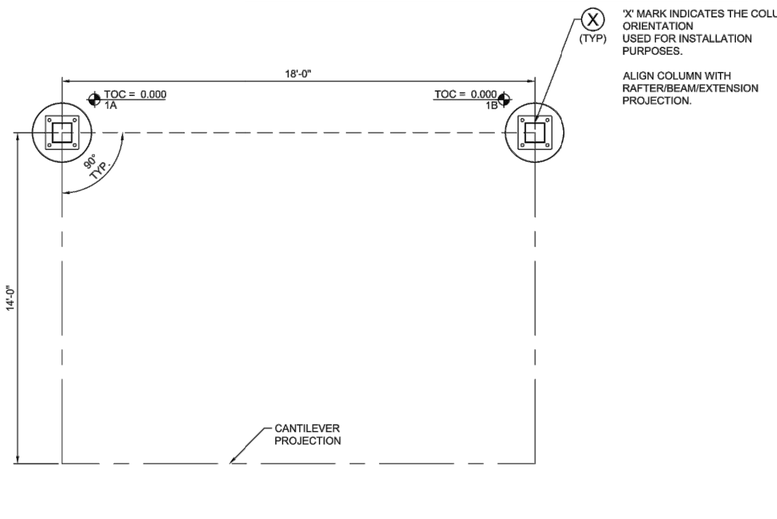

FOUNDATION LOCATION LAYOUT

(ELEVATIONS ARE IN FEET)
(FIELD VERIFY ALL DIMENSIONS AND ELEVATIONS)

PLAN NORTH

FOR TRUE NORTH SEE CUSTOMER'S SITE PLAN

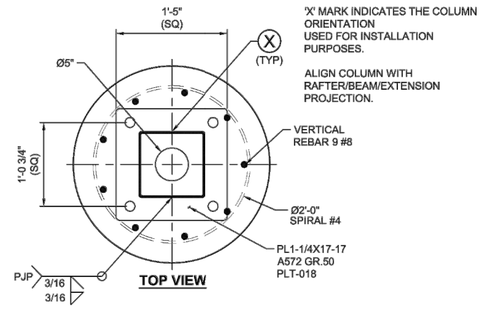

TOP VIEW

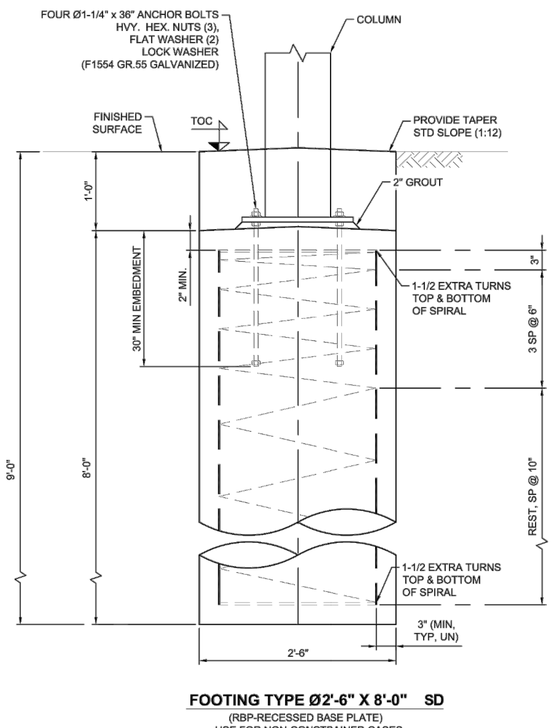

FOOTING TYPE Ø2'-6" X 8'-0" SD

(RBP-RECESSED BASE PLATE)
USE FOR NON-CONSTRAINED CASES

THESE PLANS AND SPECIFICATIONS ARE THE PROPERTY OF USA SHADE AND FABRIC STRUCTURES AND SHALL NOT BE REPRODUCED WITHOUT THEIR WRITTEN PERMISSION.

USASHADE & Fabric Structures

CORPORATE HEADQUARTERS
2580 ESTERS BLVD., SUITE 100
DFW AIRPORT, TX 75261
800-966-5005

CERTIFICATIONS:
IAS CERTIFICATION No: FA-428
CLARK COUNTY MANUFACTURER CERTIFICATION NUMBER (NEVADA): 355

CUSTOMER:
RJM DESIGN GROUP

PROJECT NAME:
GARDENA COMMUNITY AQUATICS & SENIOR CENTER PCSA

LOCATION:
GARDENA
CA

PROJECT NUMBER.
83534

STRUCTURE TYPE:
SINGLE FULL CANTILEVER
PRODUCT #202.5

SIZE:
14' X 18' X 10'e

SCALE : AS NOTED

DRAWING SIZE: B

NC	RELEASE FOR CONSTRUCTION	01/16/23	MMB	MB	MB
REV	DESCRIPTION	DATE	DRW	CHK	ENG

REGISTERED PROFESSIONAL ENGINEER — WILLIAM N. BOWEN II — No. C32642 — EXP 12-31-23 — CIVIL — STATE OF CALIFORNIA

Digitally signed by William N Bowen II, P.E.
DN: cn=William N Bowen II, P.E., o, ou, email=bbs_consultants@msn.com, c=US
Date: 2023.02.08 12:02:27 -06'00'

Eng. By :	MB	01/16/23
Design By :	MMB	01/16/23
Approved By :	MB	01/16/23

DRAWING DESCRIPTION:
FOOTING DETAILS

DWG. 83534-2.0

PAGE 3000

REV. NC

1 SINGLE FULL CANTILEVER SHADE STRUCUTRES - FOOTING DETAILS

DIGALERT — DIAL TOLL FREE 1-800-422-4133 — AT LEAST TWO DAYS BEFORE YOU DIG — UNDERGROUND SERVICE ALERT OF SOUTHERN CALIFORNIA

BASIS OF BEARINGS:
BEARINGS SHOWN HEREON ARE BASED ON THE CENTERLINE OF 162 ND STREET (FORMERLY MARKET STREET) BEING N 89° 55' 30" E SHOWN ON TRACT NO. 10901, M.B. 254/31-32

BENCHMARK:
THE CITY OF GARDENA BENCHMARK NO. 5D-15 ELEV. = 43.508

CONSULTANT:

PREPARED UNDER THE SUPERVISION OF:
RJM DESIGN GROUP
31591 Camino Capistrano
San Juan Capistrano, CA 92675
www.RJMdesigngroup.com
[949] 493-2690 fax
[949] 493-2600 phone

LICENSED LANDSCAPE ARCHITECT — LICENSE NO. 5616 — 01/31/2023 — STATE OF CALIFORNIA

REVISIONS

NO.	DESCRIPTION	DATE	APPROVED
1	90% CD SUBMITTAL	12/15/2022	
2	100% CD SUBMITTAL	05/01/2023	
3	FINAL SUBMITTAL	10/02/2023	

CITY OF GARDENA
DEPARTMENT OF PUBLIC WORKS - ENGINEERING
CONSTRUCTION DETAILS
COMMUNITY AQUATICS & SENIOR CENTER
L-2.17

	INITAL	DATE
DESIGNED BY	EC	11/14/2022
DRAWN BY	TP	06/20/2023
CHECKED BY	EC	10/02/2023

APPROVED BY:
DATE
DIRECTOR OF PUBLIC WORKS

SHT. 32 OF 195 DWG. NO. 5-2606

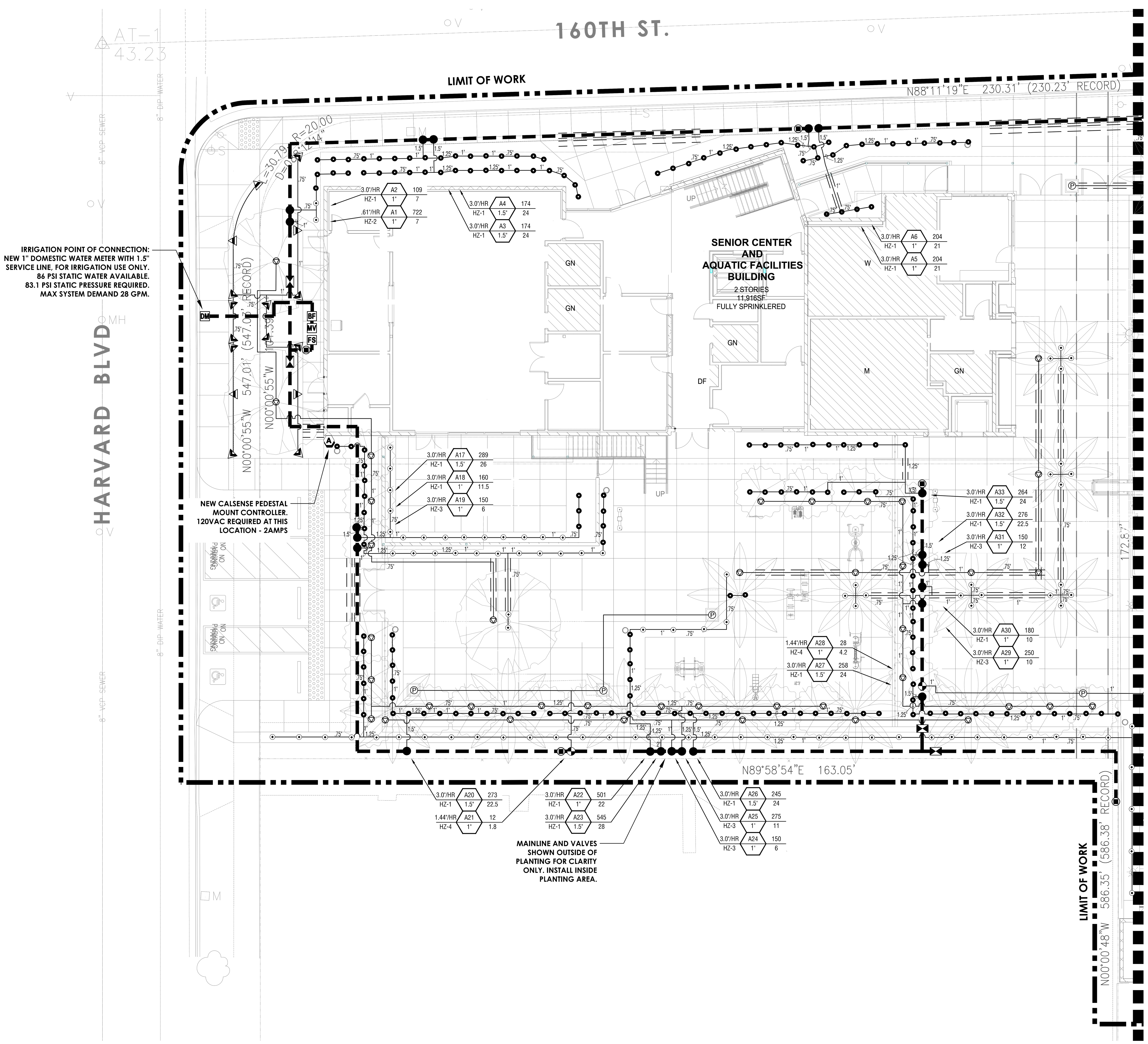

IRRIGATION EQUIPMENT LEGEND

SYMBOL (Q H F)	MANUFACTURER	MODEL NO. / DESCRIPTION	GPM	PSI	RADIUS (FT.)	PRECIP.	DETAIL
[Bubbler]	RAIN BIRD	RD-06-S-P30-F/5Q-B POP-UP BUBBLER HEAD, EACH SYMBOL REPRESENTS TWO BUBBLERS PER BOX TREE. PLACE BUBBLERS OUTSIDE OF ROOTBALL ON OPPOSITE SIDES OF TREE. ADJUST PER ROOTBALL SIZE TYPICAL.	0.50 (1.0)	30	5	3.0 IN./HR	A,B
[Rotor]	RAIN BIRD	RD-06-S-P45-F - R-VAN14, 6" POP-UP WITH CHECK VALVE ,PRESSURE REGULATOR, AND ADJUSTABLE ROTARY NOZZLE. FULL NOZZLE SHALL BE R-VAN14-360	0.32-1.27	45	8-14	0.61 IN./HR.	A
[Rotor]	RAIN BIRD	RD-06-S-P45-F - R-VAN18, 6" POP-UP WITH CHECK VALVE ,PRESSURE REGULATOR, AND ADJUSTABLE ROTARY NOZZLE. FULL NOZZLE SHALL BE R-VAN18-360	0.50-1.85	45	13-18	0.61 IN./HR.	A
[Rotor]	RAIN BIRD	RD-06-S-P45-F - R-VAN24, 6" POP-UP WITH CHECK VALVE, PRESSURE REGULATOR, AND ADJUSTABLE ROTARY NOZZLE. FULL NOZZLE SHALL BE R-VAN24-360	0.84-3.48	45	17-24	0.61 IN./HR.	A
[Stream bubbler]	RAIN BIRD	RD-06-S-P30-F/5CST-B POP-UP STREAM BUBBLER HEAD - 2 STREAMS	0.50	30	3	3.0 IN./HR	A
[Stream bubbler]	RAIN BIRD	RD-06-S-P30-F/5F-B POP-UP STREAM BUBBLER HEAD - 6 STREAMS. NOTE: CONTRACTOR SHALL USE SQ-F NOZZLE IN THE EVENT ANY SHRUBS DO NOT RECIEVE PROPER COVERAGE.	1.50	30	3	3.0 IN./HR	A
P	RAIN BIRD	XFCV-09-12-XX LANDSCAPE DRIP TUBING W/ .9 GPH EMITTERS 12" ON CENTER. DRIP TUBING HAS BUILT IN CHECK VALVES. DRIP TUBING SHALL BE INSTALLED AT GRADE UNDER MULCH, AND IN RINGS (1) RING PER 16" POT AND (2) RINGS PER 24" POT. ESTIMATE 40 LINEAR FEET OF DRIPLINE TUBING PER POT. INSTALL TUBING STAKES A MAXIMUM OF FIVE (5) FEET ON CENTER. INSTALL A DRIP INDICATOR IN THE (2) FURTHEST POTS ON OPPOSITE SIDES OF THE VALVE ZONE.	.60 (TOTALS VARY)	30	N/A	1.44 IN./HR.	C,D
[Gate valve]	NIBCO	T-113 GATE VALVE, LINE SIZE, WITH BRONZE WHEEL HANDLE UP TO 2" INSTALLED IN A RECTANGULAR BOX					E
DM	WATER METER	EXISTING WATER METER FOR LANDSACPE ONLY REFER TO CIVIL PLANS FOR FINAL LOCATION.					N/A
BF	FEBCO/WATTS/ STRONG BOX	2" LF 825 YA LEAD FREE BACKFLOW PREVENTER WITH LF777-304SS#60 STRAINER AND V.I.T. STRONGBOX SBBC-22SS SMOOTH TOUCH STAINLESS STEEL ENCLOSURE ON QP-22BF QUICK PAD.					F
MV FS	SUPERIOR/ CALSENSE	MASTER VALVE AND FLOW SENSOR. 3100150PRS NORMALLY OPEN 1.5" BRASS MASTER VALVE WITH PRESSURE REGULATOR AND CALSENSE FM-125B 1.25" BRASS FLOW SENSOR. INSTALL BOTH PER MANUFACTURER'S RECOMMENDATIONS AND WIRE DIRECTLY TO THE CONTROLLER.					G,H
A	CALSENSE	CS3-48-S/FM-125B/CS3-GR-BUNDLE-2/3100150PRS CONTROLLER. CONTACT JEFF DRONGOWSKI WITH CALSENSE FOR ORDERING (760) 580-9428. CS3000 SERIES 48 STATION CONTROLLER IN A STAINLESS STEEL TOP ENTRY ENCLOSURE W/ CELL CARD, ANTENNA. CONTRACTOR SHALL CONTACT CALSENSE TO INSURE PROPER COMMUNICATION WITH THE CITY'S CENTRAL CONTROL SYSTEM. CONTROLLER WILL COMMUNICATE WITH THE CITY'S CENTRAL CONTROL RAIN SENSING LOCATED OFF-SITE.					L
[Quick coupler]	RAIN BIRD	44LRC 1" QUICK COUPLER VALVE WITH LOCKING COVER, INSTALL WITHIN 10" ROUND VALVE BOX					I
[Control valve]	RAIN BIRD	1X0-EFB-CP-PRS-D, BRASS REMOTE CONTROL VALVE W/ PRESSURE REGULATOR, SEE PLAN FOR SIZE.					J
[Drip valve]	RAIN BIRD	XCZ-PRB-100-COM (1",1 1/2") DRIP VALVE CONTROL ZONE ASSEMBLY, SIZE AS SHOWN					K
[Thin line]	AS APPROVED	PVC PIPE 3/4" - 2" SCH. 40 WITH SCH.40 FITTINGS AS LATERAL LINES 12" BELOW GRADE, AND ABOVE THE FIELD SUB DRAINS.					M
[Heavy dashed line]	AS APPROVED	PVC PIPE 2" CL. 315 SOLVENT WELD WITH SCH.80 FITTINGS AS MAINLINES-24" DEPTH					M
[Double dashed line]	AS APPROVED	PVC PIPE SCH. 40 AS SLEEVING, 2 TIMES THE DIAMETER OF PIPE OR WIRE BUNDLE CARRIED. PLACE BELOW ALL PAVING, HARDSCAPE ETC. AND AS DIRECTED BY OWNER'S AUTHORIZED REPRESENTATIVE.					N
NO SYMBOL	AS APPROVED	DIRECT BURIAL WATER-PROOF WIRE CONNECTORS FOR USE ON ALL WIRE CONNECTIONS (U.L. APPROVED).					N/A
NO SYMBOL	NDS	PRO SERIES/PRO SERIES PLUS VALVE BOXES, SIZE PER EQUIPMENT DETAILS, LEGEND, AND SPECIFICATIONS. 10" ROUND SHALL BE MODEL 311BCBLK, 14" X 19" STANDARD RECT. SHALL BE MODEL 313BCBBLK. VALVE BOXES SHALL HAVE BLACK BODY AND BLACK LIDS. FOR USE IN NON-VEHICULAR TRAFFIC SITUATIONS ONLY. DO NOT INSTALL IN CONCRETE OR ASPHALT.					N/A

CONTROL VALVE SYMBOL

PRECIP / HZ — No. / Size
- No. — INDICATES VALVE NO.
- A — INDICATES SQUARE FOOT AREA
- GPM — INDICATES GPM
- Size — INDICATES VALVE SIZE

HYDROZONE	HYDROZONE DESCRIPTION
1	LOW WATER SHRUBS WITH BUBBLERS
2	HIGH WATER TURF WITH ROTARYS
3	MED WATER TREES WITH BUBBLERS
4	MED WATER POTS WITH DRIPLINE

2015 MWELO WATER EFFICIENT LANDSCAPE WORKSHEET

Project: Community Aquatics & Senior Center, Gardena CA
Reference Evapotranspiration (ETo): 50.1

Glasir Design Irrigation Consulting CID#6004-glasirdesign.com

Hydrozone # /Planting Description[a]	Plant Factor (PF)	Irrigation Method[b]	Irrigation Efficiency (IE)[c]	ETAF (PF/IE)	Landscape Area (sq, ft,)	ETAF x Area	Estimated Total Water Use (ETWU)[d]
Regular Landscape Areas							
#1 low shrub	0.2	Bubblers	0.81	0.25	5,394	1,331.85	41,369.98
#2 turf rotary	0.8	Bubblers	0.81	0.99	722	713.09	22,149.89
#3 med trees	0.5	Bubblers	0.81	0.62	1,450	895.06	27,802.41
#4 med pots	0.5	Drip	0.81	0.62	44	27.16	843.66
				Totals	7,610	2,967.16	92,165.94
Special Landscape Areas							
#5 pool	[redacted]			1	7,020	7,020.00	218,055.24
				1			
				Totals	7,020	7,020.00	218,055.24
						ETWU Total	310,221.18
						Maximum Allowed Water Allowance (MAWA)[e]	324,427.06

[a] *Refer to legend for Hydrozone description.*

[d] *ETWU (Annual Gallons Required) = Eto x 0.62 x ETAF x Area*
where 0.62 is a conversion factor that converts acre-inches per acre per year to gallons per square foot per year.

[e] *MAWA (Annual Gallons Allowed) = (Eto) (0.62) [(ETAF x LA) + ((1-ETAF) x SLA)]*
where 0.62 is a conversion factor that converts acre-inches per acre per year to gallons per square foot per year, LA is the total landscape area in square feet, SLA is the total special landscape area in square feet,
and ETAF is .55 for residential areas and 0.45 for non-residential areas.

ETAF Calculations

Regular Landscape Areas

Total ETAF x Area	2,967
Total Area	7,610
Average ETAF	0.39

Average ETAF for Regular Landscape Areas must be 0.55 or below for residential areas, and 0.45 or below for non-residential areas.

All Landscape Areas Including SLA

Total ETAF x Area	9,987.16
Total Area	14,630
Sitewide ETAF	0.68

IRRIGATION WATER PRESSURE LOSS CALCULATIONS

WATER METER NUMBER	IRR	WATER METER SIZE	1	INCHES
WATER METER ELEVATION (FT)		HIGHEST HEAD ELEVATION		FT
REMOTE CONTROL VALVE #	A1	STATIC WATER PRESSURE	86	PSI
RCV DEMAND (GPM)	7	TOTAL DEMAND	28	GPM

SIZE (INCHES)	DESCRIPTION		GPM	PRESSURE LOSS	
1.0	SERVICE LINE		28	4.75	PSI
1.0	WATER METER (DISC TYPE)		28	4.6	PSI
2.0	BACKFLOW PREVENTION ASSEMBLY (RPZ TYPE)		28	13.0	PSI
2.0	BACKFLOW ASSEMBLY PIPING		28	0.6	PSI
2.0	FILTERATION		28	0.3	PSI
2.0	PRESSURE REGULATOR		28	4.0	PSI
1.5	MASTER VALVE		7	1	PSI
2.0	ISOLATION VALVE		7	1.0	PSI
2.0	PVC CL 315 MAINLINE (FT)	50	7	0.4	PSI
1.5	REMOTE CONTROL VALVE ASSEMBLY		7	0.7	PSI
N/A	LATERAL LINE LOSSES		7	4.5	PSI
N/A	FITTING LOSSES		7	1.3	PSI

TOTAL PRESSURE LOSS OF ALL COMPONENTS		38.1	PSI
PRESSURE REQUIRED AT HEAD (OPERATING PRESSURE)		45.0	PSI
ELEVATION LOSS (FT)	0	0.0	PSI
TOTAL PRESSURE REQUIRED		83.1	PSI
STATIC WATER PRESSURE		86.0	PSI
RESIDUAL WATER PRESSURE		2.9	PSI
SET PRESSURE REGULATOR OR MASTER CONTROL VALVE AT		N/A	PSI
PRESSURE BOOST, IF REQUIRED (SET TO ACHIEVE 100 KPA RESIDUAL)		N/A	PSI

Glasir Design Irrigation Consulting CID#6004-glasirdesign.com

CITY OF GARDENA COMMUNITY AQUATICS CENTER IRRIGATION RUN TIMES (IN MINUTES)

	JAN	FEB	MAR	APR	MAY	JUNE	JULY	AUG	SEP	OCT	NOV	DEC
CYCLES PER WEEK - TURF	2	2	3	5	5	6	6	6	4	3	2	2
TURF CROP COEFFICIENT	.61	.64	.75	1.04	.95	.88	.94	.86	.74	.75	.69	.60
CYCLES PER WEEK-SHRUB/TREE	1	1	2	2	2	3	3	3	2	2	1	1
Eto DAILY AVERAGE	.07	.09	.12	.16	.17	.20	.21	.20	.16	.12	.09	.07

Turf Root Depth	4"
Shrub Root Depth	6"
Depletion Factor (MAD)	40%

Soil Type (Textural)	CLAY LOAM
Field Capacity	27%
Permanent Wilt Point	13%
Apparent Specific Gravity	1.35

IRRIGATION RUN TIMES

Hydrozone	PLANT TYPE	Water Usage	Kc	SPRINKLER TYPE	EXPOSURE	EXPO FACTOR	PRECIP (in/hr)	SPKLR EFFIC.	ROOT DEPTH (in)	RUN TIME MULTIPLIER	JAN	FEB	MAR	APR	MAY	JUN	JUL	AUG	SEP	OCT	NOV	DEC
1	SHRUB	LOW	0.20	BUBBLER	FULL SUN	100%	3.00	81%	6	1.23	2	3	2	3	3	2	2	2	3	2	3	2
2	TURF	VARIABLE	Var	ROTARY	FULL SUN	100%	0.61	75%	12	1.33	20	26	28	31	30	27	30	26	27	28	29	19
3	TREE	MEDIUM	0.50	BUBBLER	FULL SUN	100%	3.00	81%	12	1.23	6	8	5	7	7	6	6	6	7	5	8	6
4	POTS	MEDIUM	0.50	DRIP	FULL SUN	100%	1.44	75%	6	1.33	14	18	12	16	17	13	14	13	16	12	18	14

IRRIGATION NOTES

NOTE A:
MAINLINE AND RELATED EQUIPMENT SHOWN WITHIN PAVING FOR CLARITY ONLY, ACTUAL MAINLINE AND RELATED EQUIPMENT LOCATION TO BE WITHIN PLANTERS AND A MINIMUM OF 18" OFF ADJACENT HARDSCAPE AND OTHER OBSTACLES TYP.

NOTE B:
BUBBLERS AND LATERAL LINES ARE SHOWN WITHIN PAVING FOR CLARITY ONLY, ACTUAL LOCATION TO BE WITHIN PLANTER. BUBBLERS SHALL BE ALIGNED WITH TREES AND AS DIRECTED BY OWNER'S AUTHORIZED REPRESENTATIVE. CONFIRM ALL LAYOUT IN FIELD WITH OWNER'S AUTHORIZED REPRESENTATIVE PRIOR TO STARTING WORK.

NOTE C:
CONTRACTOR SHALL PROVIDE THE CITY WITH A NEATLY DRAWN LAMINATED IRRIGATION CONTROLLER CHART.

NOTE D:
I HAVE COMPLIED WITH THE CRITERIA OF THE IRRIGATION GUIDELINES AND APPLIED THEM ACCORDINGLY FOR THE EFFICIENT USE OF WATER IN THE IRRIGATION DESIGN PLAN

NOTE E:
REFER TO SHEETS L-4.01 FOR IRRIGATION DETAILS

DIGALERT
DIAL TOLL FREE 1-800-422-4133
AT LEAST TWO DAYS BEFORE YOU DIG
UNDERGROUND SERVICE ALERT OF SOUTHERN CALIFORNIA

BASIS OF BEARINGS:
BEARINGS SHOWN HEREON ARE BASED ON THE CENTERLINE OF 162 ND STREET (FORMERLY MARKET STREET) BEING N 89° 55' 30" E SHOWN ON TRACT NO. 10901, M.B. 254/31-32

BENCHMARK:
THE CITY OF GARDENA BENCHMARK NO. 5D-15 ELEV. = 43.508

CITY OF GARDENA · FREEWAY CITY · INCORPORATED 1930

CONSULTANT:
Glasir Design Irrigation Consulting CID#6004-glasirdesign.com

PREPARED UNDER THE SUPERVISION OF:
RJM DESIGN GROUP
31591 Camino Capistrano
San Juan Capistrano, CA 92675
www.RJMdesigngroup.com
[949] 493-2690 fax
[949] 493-2600 phone

LICENSED LANDSCAPE ARCHITECT · STATE OF CALIFORNIA · Signature · 09/30/2025 Renewal Date · 9/27/2023 Date

REVISIONS

NO.	DESCRIPTION	DATE	APPROVED
1	90% CD SUBMITTAL	12/15/2022	
2	100% CD SUBMITTAL	05/01/2023	
3	FINAL SUBMITTAL	10/02/2023	

CITY OF GARDENA
DEPARTMENT OF PUBLIC WORKS - ENGINEERING
IRRIGATION PLAN
COMMUNITY AQUATICS & SENIOR CENTER
L-3.01

	INITAL	DATE
DESIGNED BY	EC	11/14/2022
DRAWN BY	TP	06/20/2023
CHECKED BY	EC	10/02/2023

APPROVED BY:
DATE — DIRECTOR OF PUBLIC WORKS
SHT. 33 OF 195 — DWG. NO. 5-2606

FILE PATH: C:\USERS\CHRIS CURRY\DESKTOP\GLASIR DESIGN\03 PROJECTS\2021\21113 GARDENA COMMUNITY AQUATIC AND SENIOR CENTER\301.01-CD-L301-IP 230927.DWG
PLOT TIME: 06/30/2023 9:00 AM

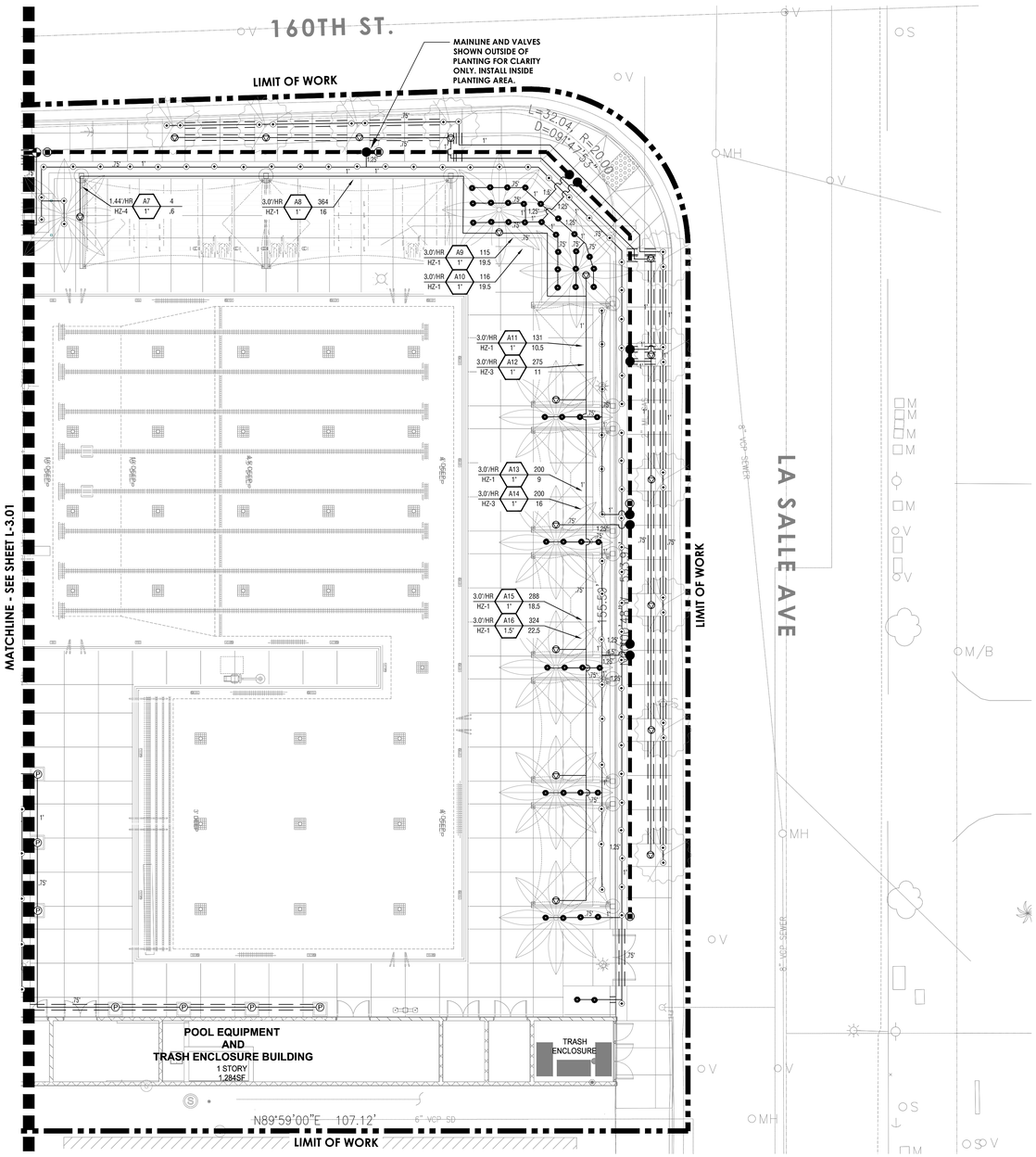

IRRIGATION EQUIPMENT LEGEND

SYMBOL (Q H F)	MANUFACTURER	MODEL NO. / DESCRIPTION	GPM	PSI	RADIUS (FT.)	PRECIP.	DETAIL
	RAIN BIRD	RD-06-S-P30-F/SCI-B POP-UP BUBBLER HEAD. EACH SYMBOL REPRESENTS TWO BUBBLERS PER BOX TREE. PLACE BUBBLERS OUTSIDE OF ROOTBALL ON OPPOSITE SIDES OF TREE. ADJUST PER ROOTBALL SIZE TYPICAL.	0.50 (1.0)	30	5	3.0 IN./HR	A,B
	RAIN BIRD	RD-06-S-P4S-F - R-VAN14, 4" POP-UP WITH CHECK VALVE .PRESSURE REGULATOR, AND ADJUSTABLE ROTARY NOZZLE. FULL NOZZLE SHALL BE R-VAN14-360	0.32-1.27	45	8-14	0.61 IN./HR.	A
	RAIN BIRD	RD-06-S-P4S-F - R-VAN18, 4" POP-UP WITH CHECK VALVE .PRESSURE REGULATOR, AND ADJUSTABLE ROTARY NOZZLE. FULL NOZZLE SHALL BE R-VAN18-360	0.50-1.85	45	13-18	0.61 IN./HR.	A
	RAIN BIRD	RD-06-S-P4S-F - R-VAN24, 6" POP-UP WITH CHECK VALVE .PRESSURE REGULATOR, AND ADJUSTABLE ROTARY NOZZLE. FULL NOZZLE SHALL BE R-VAN24-360	0.84-3.48	45	17-24	0.61 IN./HR.	A
	RAIN BIRD	RD-06-S-P30-F/SCST-B POP-UP STREAM BUBBLER HEAD - 2 STREAMS	0.50	30	3	3.0 IN./HR	A
	RAIN BIRD	RD-06-S-P30-F/SF-B POP-UP STREAM BUBBLER HEAD - 6 STREAMS. NOTE: CONTRACTOR SHALL USE SQ-F NOZZLE IN THE EVENT ANY SHRUBS DO NOT RECIEVE PROPER COVERAGE.	1.50	30	3	3.0 IN./HR	A
P	RAIN BIRD	XFCV-09-12-XX LANDSCAPE DRIP TUBING W/ .9 GPH EMITTERS 12" ON CENTER. DRIP TUBING HAS BUILT IN CHECK VALVES. DRIP TUBING SHALL BE INSTALLED AT GRADE UNDER MULCH. AND IN RINGS (1) RING PER 16" POT AND (2) RINGS PER 24" POT. ESTIMATE 40 LINEAR FEET OF DRIPLINE TUBING PER POT. INSTALL TUBING STAKES A MAXIMUM OF FIVE (5) FEET ON CENTER. INSTALL A DRIP INDICATOR IN THE (2) FURTHEST POTS ON OPPOSITE SIDES OF THE VALVE ZONE.	.60 (TOTALS VARY)	30	N/A	1.44 IN./HR.	C,D
	NIBCO	T-113 GATE VALVE. LINE SIZE. WITH BRONZE WHEEL HANDLE UP TO 2" INSTALLED IN A RECTANGULAR BOX					E
DM	WATER METER	EXISTING WATER METER FOR LANDSACPE ONLY REFER TO CIVIL PLANS FOR FINAL LOCATION.					N/A
BF	FEBCO/WATTS/ STRONG BOX	2" LF 825 YA LEAD FREE BACKFLOW PREVENTER WITH LF777-3045S#60 STRAINER AND V.I.T. STRONGBOX SBBC-22SS SMOOTH TOUCH STAINLESS STEEL ENCLOSURE ON QP-228F QUICK PAD.					F
MV FS	SUPERIOR/ CALSENSE	MASTER VALVE AND FLOW SENSOR. 3100150PRS NORMALLY OPEN 1.5" BRASS MASTER VALVE WITH PRESSURE REGULATOR AND CALSENSE FM-1250 1.25" BRASS FLOW SENSOR. INSTALL BOTH PER MANUFACTURER'S RECOMMENDATIONS AND WIRE DIRECTLY TO THE CONTROLLER.					G,H
A	CALSENSE	CS3-48-S/FM-1250/CS3-GR-BUNDLE-2/3100150PRS CONTROLLER. CONTACT JEFF DRONGOWSKI WITH CALSENSE FOR ORDERING (760) 580-9408. CS3000 SERIES 48 STATION CONTROLLER IN A STAINLESS STEEL TOP ENTRY ENCLOSURE W/ CELL CARD, ANTENNA. CONTRACTOR SHALL CONTACT CALSENSE TO INSURE PROPER COMMUNICATION WITH THE CITY'S CENTRAL CONTROL SYSTEM. CONTROLLER WILL COMMUNICATE WITH THE CITY'S CENTRAL CONTROL RAIN SENSING LOCATED OFF-SITE.					L
	RAIN BIRD	44LRC 1" QUICK COUPLER VALVE WITH LOCKING COVER. INSTALL WITHIN 10" ROUND VALVE BOX					I
	RAIN BIRD	1XQ-EFB-CP-PRS-D. BRASS REMOTE CONTROL VALVE W/ PRESSURE REGULATOR. SEE PLAN FOR SIZE.					J
	RAIN BIRD	XCZ-PRB-100-COM (1",1 1/2") DRIP VALVE CONTROL ZONE ASSEMBLY. SIZE AS SHOWN					K
	AS APPROVED	PVC PIPE 3/4" - 2" SCH. 40 WITH SCH.40 FITTINGS AS LATERAL LINES 12" BELOW GRADE. AND ABOVE THE FIELD SUB DRAINS.					M
	AS APPROVED	PVC PIPE 2" CL. 315 SOLVENT WELD WITH SCH.80 FITTINGS AS MAINLINES-24" DEPTH					M
	AS APPROVED	PVC PIPE SCH. 40 AS SLEEVING, 2 TIMES THE DIAMETER OF PIPE OR WIRE BUNDLE CARRIED. PLACE BELOW ALL PAVING, HARDSCAPE ETC. AND AS DIRECTED BY OWNER'S AUTHORIZED REPRESENTAITVE.					N
NO SYMBOL	AS APPROVED	DIRECT BURIAL WATER-PROOF WIRE CONNECTORS FOR USE ON ALL WIRE CONNECTIONS (U.L. APPROVED).					N/A
NO SYMBOL	NDS	PRO SERIES/PRO SERIES PLUS VALVE BOXES. SIZE PER EQUIPMENT DETAILS. LEGEND, AND SPECIFICATIONS. 10" ROUND SHALL BE MODEL 3118CBLK. 14" X 19" STANDARD RECT. SHALL BE MODEL 3138CBBLK. VALVE BOXES SHALL HAVE BLACK BODY AND BLACK LIDS. FOR USE IN NON-VEHICULAR TRAFFIC SITUATIONS ONLY. DO NOT INSTALL IN CONCRETE OR ASPHALT.					N/A

CONTROL VALVE SYMBOL

PRECIP HZ | No. Size | A GPM

- INDICATES VALVE NO.
- INDICATES SQUARE FOOT AREA
- INDICATES GPM
- INDICATES VALVE SIZE

HYDROZONE	HYDROZONE DESCRIPTION
1	LOW WATER SHRUBS WITH BUBBLERS
2	HIGH WATER TURF WITH ROTARYS
3	MED WATER TREES WITH BUBBLERS
4	MED WATER POTS WITH DRIPLINE

IRRIGATION NOTES

NOTE A:
MAINLINE AND RELATED EQUIPMENT SHOWN WITHIN PAVING FOR CLARITY ONLY. ACTUAL MAINLINE AND RELATED EQUIPMENT LOCATION TO BE WITHIN PLANTERS AND A MINIMUM OF 18" OFF ADJACENT HARDSCAPE AND OTHER OBSTACLES TYP.

NOTE B:
BUBBLERS AND LATERAL LINES ARE SHOWN WITHIN PAVING FOR CLARITY ONLY. ACTUAL LOCATION TO BE WITHIN PLANTER. BUBBLERS SHALL BE ALIGNED WITH TREES AND AS DIRECTED BY OWNER'S AUTHORIZED REPRESENTATIVE. CONFIRM ALL LAYOUT IN FIELD WITH OWNER'S AUTHORIZED REPRESENTATIVE PRIOR TO STARTING WORK.

NOTE C:
CONTRACTOR SHALL PROVIDE THE CITY WITH A NEATLY DRAWN LAMINATED IRRIGATION CONTROLLER CHART.

NOTE D:
I HAVE COMPLIED WITH THE CRITERIA OF THE IRRIGATION GUIDELINES AND APPLIED THEM ACCORDINGLY FOR THE EFFICIENT USE OF WATER IN THE IRRIGATION DESIGN PLAN

NOTE E:
REFER TO SHEETS L-4.01 FOR IRRIGATION DETAILS

DIGALERT
DIAL TOLL FREE
1-800-422-4133
AT LEAST TWO DAYS BEFORE YOU DIG
UNDERGROUND SERVICE ALERT OF SOUTHERN CALIFORNIA

BASIS OF BEARINGS:
BEARINGS SHOWN HEREON ARE BASED ON THE CENTERLINE OF 162 ND STREET (FORMERLY MARKET STREET) BEING N 89° 55' 30" E SHOWN ON TRACT NO. 10901, M.B. 254/31-32

BENCHMARK:
THE CITY OF GARDENA BENCHMARK NO. 5D-15 ELEV. = 43.508

CONSULTANT:
Glasir Design
Irrigation Consulting
CID#6004-glasirdesign.com

PREPARED UNDER THE SUPERVISION OF:
RJM DESIGN GROUP
31591 Camino Capistrano
San Juan Capistrano, CA 92675
www.RJMdesigngroup.com
(949) 493-2690 fax
(949) 493-2600 phone

LICENSED LANDSCAPE ARCHITECT — 5846 — 07/31/2025 — STATE OF CALIFORNIA

REVISIONS

NO.	DESCRIPTION	DATE	APPROVED
1	90% CD SUBMITTAL	12/15/2022	
2	100% CD SUBMITTAL	08/01/2023	
3	FINAL SUBMITTAL	10/02/2023	

CITY OF GARDENA
DEPARTMENT OF PUBLIC WORKS - ENGINEERING

IRRIGATION PLAN

COMMUNITY AQUATICS & SENIOR CENTER
L-3.02

	INITIAL	DATE
DESIGNED BY	EC	11/14/2022
DRAWN BY	TP	06/20/2023
CHECKED BY	EC	10/02/2023

APPROVED BY:
DATE
DIRECTOR OF PUBLIC WORKS

SHT. 34 OF 195 DWG. NO. 5-2606

FILE PATH: C:\USERS\CHRIS CORBY\DESKTOP\GLASIR DESIGN\03 PROJECTS\2021\21115 GARDENA COMMUNITY AQUATIC AND SENIOR CENTER\30 01 CDs L-301 IP 20972.DWG
LAST SAVED BY: CHRIS

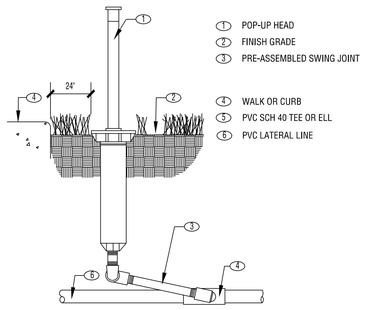

1. POP-UP HEAD
2. FINISH GRADE
3. PRE-ASSEMBLED SWING JOINT
4. WALK OR CURB
5. PVC SCH 40 TEE OR ELL
6. PVC LATERAL LINE

A POP UP SPRINKLER
N.T.S.

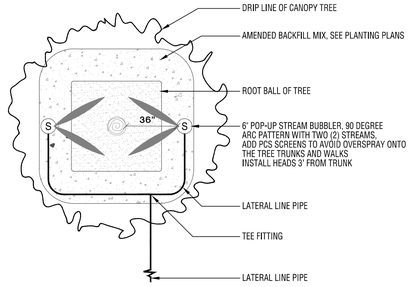

B TREE BUBBLER LAYOUT
N.T.S.

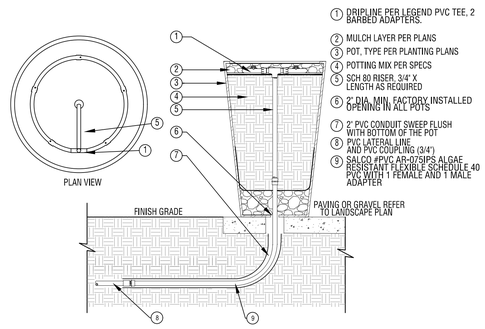

1. DRIPLINE PER LEGEND PVC TEE, 2 BARBED ADAPTERS.
2. MULCH LAYER PER PLANS
3. POT, TYPE PER PLANTING PLANS
4. POTTING MIX PER SPECS
5. SCH 80 RISER, 3/4" X LENGTH AS REQUIRED
6. 2" DIA. MIN. FACTORY INSTALLED OPENING IN ALL POTS
7. 2" PVC CONDUIT SWEEP FLUSH WITH BOTTOM OF THE POT
8. PVC LATERAL LINE AND PVC COUPLING (3/4")
9. SALCO #PVC AR-075IPS ALGAE RESISTANT FLEXIBLE SCHEDULE 40 PVC WITH 1 FEMALE AND 1 MALE ADAPTER

C DRIP IRRIGATION FOR POTS
N.T.S.

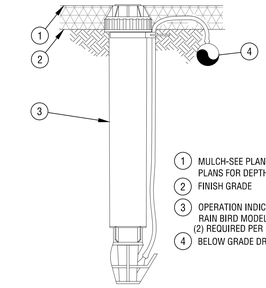

1. MULCH-SEE PLANTING PLANS FOR DEPTH
2. FINISH GRADE
3. OPERATION INDICATOR RAIN BIRD MODEL: OPERIND (2) REQUIRED PER DRIP VALVE ZONE
4. BELOW GRADE DRIPLINE

NOTE:
1. INSERT BARB TRANSFER FITTING DIRECTLY INTO DRIPLINE TUBING.
2. VAN NOZZLE MAY BE SET TO CLOSED, OR IF IT IS DESIRED TO SEE SPRAY FROM THE NOZZLE, SET THE ARC TO ¼ PATTERN. THE FLOW FROM THE NOZZLE, 0.3 GPM, SHOULD BE ACCOUNTED FOR IN THE SYSTEM DESIGN.

D DRIPLINE OPERATION INDICATOR
N.T.S.

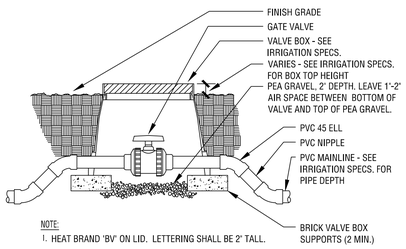

NOTE:
1. HEAT BRAND 'BV' ON LID. LETTERING SHALL BE 2" TALL.

E GATE VALVE
N.T.S.

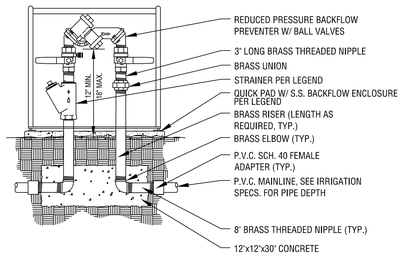

NOTES:
1. ALL RISER, UNIONS, ELBOWS AND NIPPLES SHALL BE RED BRASS.
2. CLOSE NIPPLES SHALL NOT BE USED
3. EQUIPMENT TO BE INSTALLED A MIN. OF 12" FROM WALLS, BUILDINGS, ETC.
4. INSTALL AND TEST BACKFLOW PREVENTER AS REQUIRED BY LOCAL CODES & HEALTH DEPT. VERIFY LOCAL REQUIREMENTS PRIOR TO INSTALLATION.

F REDUCED PRESSURE BACKFLOW
N.T.S.

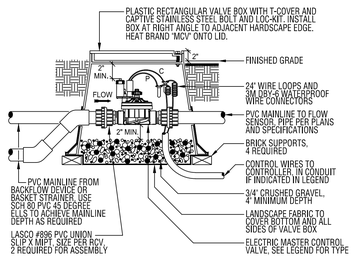

G MASTER VALVE
N.T.S.

POC WIRING NOTES:

All master valve and flow sensor wires shall be installed in conduit (sized accordingly). One spare wire shall be included inside of conduit (different color than Master Valve and Flow Sensor Wire). 2 spare wires shall be installed along the mainline along with 1 wire coiled in each valve box. (Different color than field wires and common wire). One spare Common wire shall be installed along the mainline and coiled up at each valve. (Color to be white)

Pipe Sizing Chart		
F.M. Size	Upstream Length	Downstream Length
1"	10"	5"
1.25"	12.5"	6.25"
1.5	15"	7.5"
2"	20"	10"
3"	30"	15"

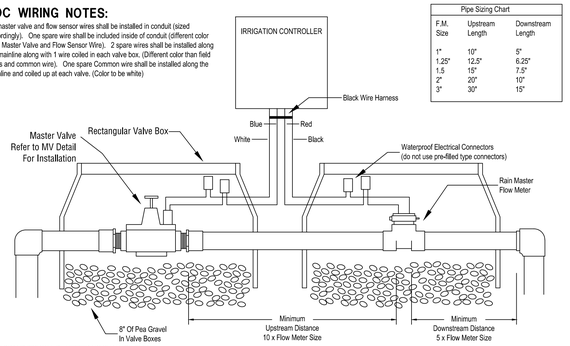

NOTE:
1. HEAT BRAND 'FS' ON LID. LETTERING SHALL BE 2" TALL.

H FLOW SENSOR INSTALLATION
N.T.S.

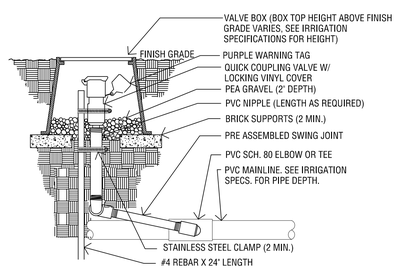

NOTES:
1. TEFLON TAPE ALL THREADS (TYP.)
2. INSTALL IN SHRUB AREAS ONLY AND A MINIMUM OF 12" FROM PLANTER EDGE

I QUICK COUPLER VALVE
N.T.S.

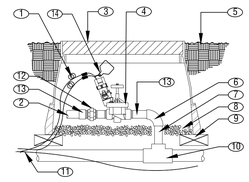

1. EXPANSION CURLS WITH WATERPROOF WIRE CONNECTORS AT SPLICES (SEE IRRIGATION SPECS)
2. PVC LATERAL TO SPRINKLERS ANGLE TO SPECIFIED DEPTH W/ 45 ELLS
3. VALVE BOX W/ LOCKING LID BOX HEIGHT ABOVE FINISH GRADE VARIES (SEE IRRIGATION SPECS)
4. REMOTE CONTROL VALVE
5. FINISH GRADE
6. SCH.80 PVC 90 SLIP X SLIP
7. PVC MAINLINE MATCH VALVE SIZE
8. 2" LAYER OF PEA GRAVEL LEAVE 1"-2" AIR SPACE BETWEEN BOTTOM OF VALVE AND TOP OF PEA GRAVEL
9. BRICK SUPPORT (1) AT EACH CORNER
10. PVC MAINLINE FITTINGS
11. CONTROLLER WIRES
12. LASCO SCH.80 UNION
13. SCH.80 NIPPLE MIPT X SLIP MATCH VALVE SIZE
14. PURPLE WARNING / ID TAG

NOTES:
1. ALL WIRE TO BE INSTALLED PER LOCAL CODES.
2. PROVIDE EXPANSION COILS AT EACH WIRE CONNECTION IN VALVE BOX. WRAP AROUND 1/2" PIPE 15 TIMES - REMOVE PIPE.
3. COMPACT SOIL AROUND VALVE BOX TO SAME DENSITY AS UNDISTURBED ADJACENT SOIL.
4. INSTALL ONLY 1 VALVE PER VALVE BOX.
5. TEFLON TAPE ALL THREADS.
6. INSTALL IN SHRUB AREAS ONLY AND A MINIMUM OF 12" FROM PLANTER EDGE

J REMOTE CONTROL VALVE
N.T.S.

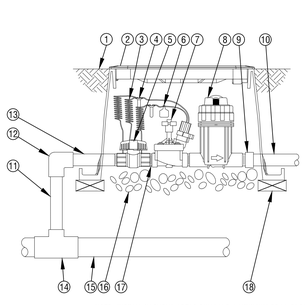

1. FINISH GRADE/TOP OF MULCH
2. VALVE BOX WITH COVER
3. 30-INCH LINEAR LENGTH OF WIRE, COILED
4. WATERPROOF CONNECTION:
5. 1-INCH BALL VALVE
6. PURPLE WARNING / ID TAG
7. REMOTE CONTROL VALVE
8. PRESSURE REGULATING QUICK CHECK BASKET FILTER
9. LASCO PVC UNION
10. LATERAL PIPE
11. PVC MAINLINE TO MATCH VALVE SIZE
12. PVC SCH 80 90DEG SLIP X SLIP
13. PVC SCH 80 NIPPLE MIPT X SLIP VALVE SIZE
14. PVC SCH 80 TEE OR ELL
15. MAINLINE PIPE
16. 3-INCH MINIMUM DEPTH OF 3/4-INCH WASHED GRAVEL
17. PVC SCH 80 NIPPLE, CLOSE
18. BRICK SUPPORTS (4-REQ.)

NOTE: INSTALL IN SHRUB AREAS ONLY AND A MINIMUM OF 12" FROM PLANTER EDGE

K DRIP CONTROL ZONE KIT
N.T.S.

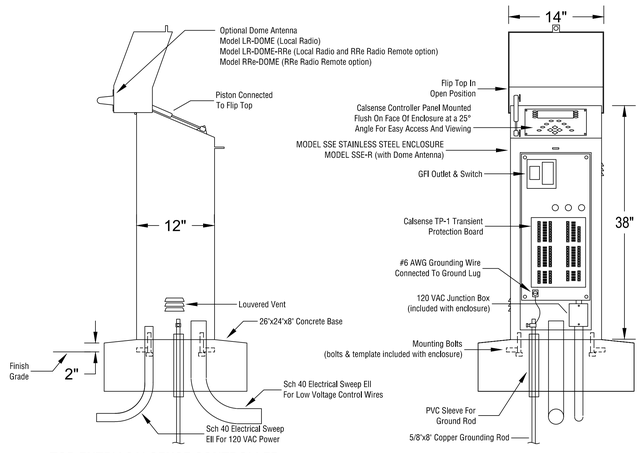

L TOP ENTRY CALSENSE CONTROLLER
N.T.S.

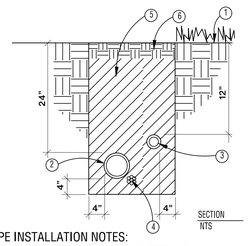

PIPE LEGEND:

1. FINISH GRADE
2. PVC MAINLINE
3. PVC LATERAL LINE
4. CONTROL WIRES OR COM. CABLE
5. FINE GRANULAR BACKFILL 1/2" MAX.
6. TOPSOIL

PIPE INSTALLATION NOTES:

1. TAPE AND BUNDLE 24 V. WIRES @ 10' INTERVALS.
2. MINIMUM DEPTH OF 24 V. WIRING SHALL BE 24" BELOW GRADE.
3. TRENCH WIDTH ALLOW 4" MIN. CLEARANCE BETWEEN PARALLEL PIPES.
4. SNAKE PIPES FROM SIDE TO SIDE WITHIN TRENCH TO ALLOW FOR MOVEMENT.
5. TIE A 20" LOOP IN ALL WIRING AT CHANGES OF DIRECTION. UNTIE PRIOR TO BACKFILLING TRENCHES.
6. PROVIDE THRUST BLOCKS PER APWA STANDARD PLANS FOR PUBLIC WORKS CONSTRUCTION DETAILS

M PIPE INSTALLATION
N.T.S.

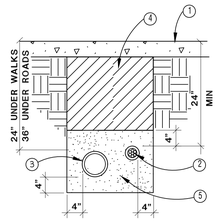

SLEEVE LEGEND:

1. PAVING
2. CONTROL WIRES OR COM. CABLE IN CONDUIT
3. SLEEVE FOR MAINLINE AND/OR LATERAL LINE
4. FINE GRANULAR BACKFILL 1/2" MAX.
5. SAND

SLEEVE NOTES:

1. IRRIGATION PIPES UNDER ROADWAYS SHALL BE INSTALLED 36" DEEP, SLEEVED AND IDENTIFIED WITH MARKING TAPE INSTALLED 12" FROM THE SURFACE. IDENTIFYING TYPE OF LINE WITH APWA STANDARD "CAUTION WATERLINE BURIED BELOW" IN BLUE OR " CAUTION RECYCLED WATERLINE BURIED BELOW" IN PURPLE. SLEEVES SHALL BE SCHEDULE 40 PVC, TWO TIMES THE DIAMETER OF THE PIPE BEING SLEEVED.

N SLEEVE INSTALLATION
N.T.S.

DIGALERT
DIAL TOLL FREE 1-800-422-4133
AT LEAST TWO DAYS BEFORE YOU DIG
UNDERGROUND SERVICE ALERT OF SOUTHERN CALIFORNIA

BASIS OF BEARINGS:
BEARINGS SHOWN HEREON ARE BASED ON THE CENTERLINE OF 162 ND STREET (FORMERLY MARKET STREET) BEING N 89° 55' 30" E SHOWN ON TRACT NO. 10901, M.B. 254/31-32

BENCHMARK:
THE CITY OF GARDENA BENCHMARK NO. 5D-15 ELEV. = 43.508

CONSULTANT:
Glasir Design Irrigation Consulting
CID#6004-glasirdesign.com

PREPARED UNDER THE SUPERVISION OF:
RJM DESIGN GROUP
31591 Camino Capistrano
San Juan Capistrano, CA 92675
www.RJMdesigngroup.com
(949) 493-2690 fax
(949) 493-2600 phone

LICENSED LANDSCAPE ARCHITECT — 5846 — 09/30/2025 — STATE OF CALIFORNIA

REVISIONS			
NO.	DESCRIPTION	DATE	APPROVED
1	90% CD SUBMITTAL	12/15/2022	
2	100% CD SUBMITTAL	05/01/2023	
3	FINAL SUBMITTAL	10/02/2023	

CITY OF GARDENA
DEPARTMENT OF PUBLIC WORKS - ENGINEERING
IRRIGATION DETAILS
COMMUNITY AQUATICS & SENIOR CENTER
L-4.01

	INITAL	DATE
DESIGNED BY	EC	11/14/2022
DRAWN BY	TP	04/20/2023
CHECKED BY	EC	10/02/2023

APPROVED BY:
DATE
DIRECTOR OF PUBLIC WORKS
SHT. 35 OF 195
DWG. NO. 5-2606

PLOTTED: C:\USERS\CHRIS CUNEY\DESKTOP\GARDENA DESIGN\L3 PROJECTS\2021\21115 GARDENA COMMUNITY AQUATIC AND SENIOR CENTER\L3D1 01-CD\L3D1-P SHEET.DWG

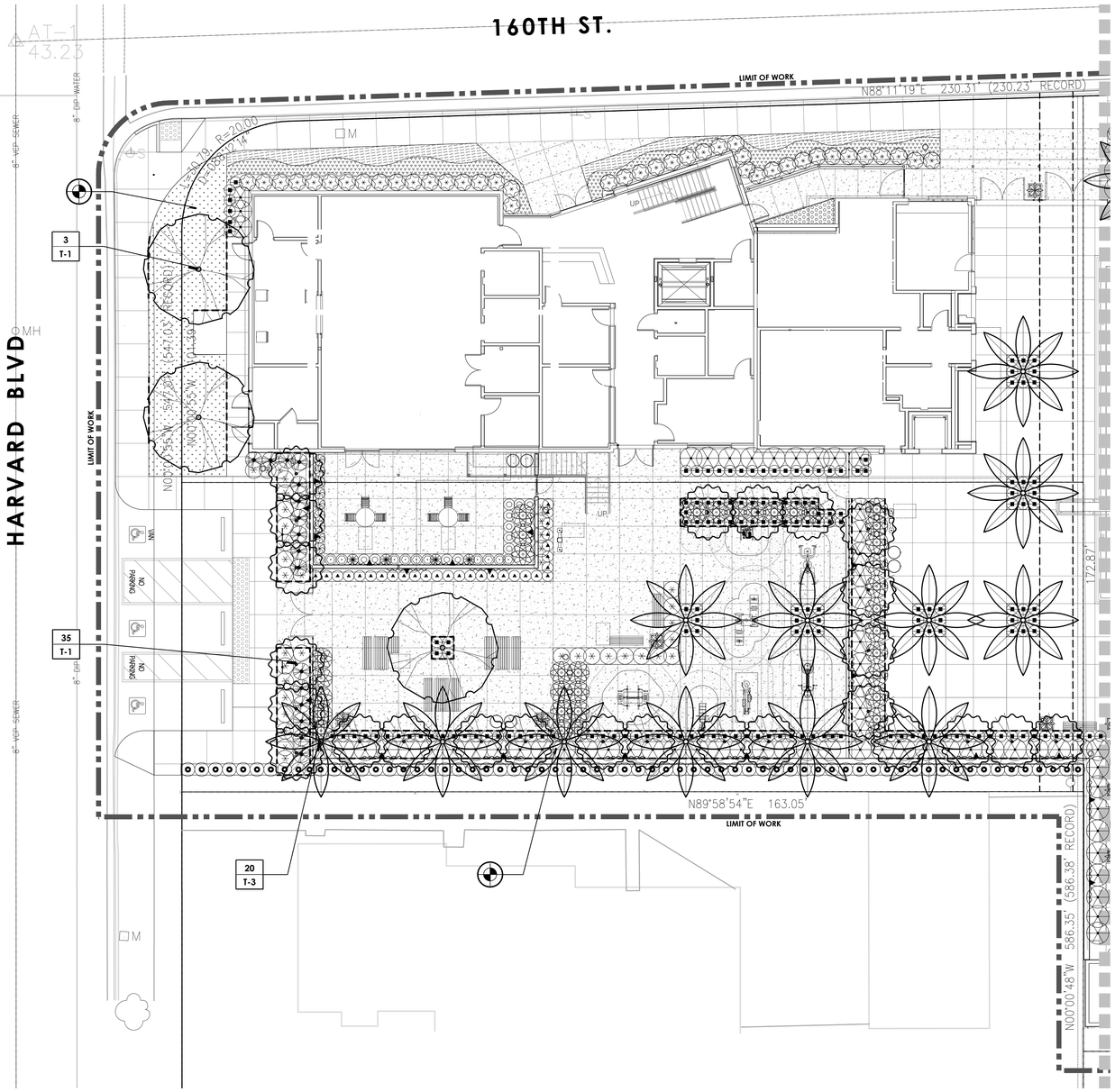

TREE LEGEND

		BOTANICAL NAME COMMON NAME	SIZE	REMARKS	QTY.
	T-1	ARBUTUS MARINA STRAWBERRY TREE	48" BOX	DETAIL 2 & 6, SHEET L-6.01 30' H X 20' W STD.	3
	T-2	LAGERSTOEMIA INDICA X FAURIEI 'BILOXI' BILOXI CRAPE MYRTLE	24" BOX	DETAIL 2 & 6, SHEET L-6.01 15' H X 10' W STD.	35
	T-3	PHOENIX DACTYLIFERA 'MEDJOOL' DATE PALM	25' B.T.H.	DETAIL 4 & 6, SHEET L-6.01 60' H X 20' W STD.	20

SHRUB LEGEND

		BOTANICAL NAME COMMON NAME	SIZE	REMARKS	QTY.
	S-1	AGAVE DESMETTIANA 'VARIEGATA' VARIEGATED SMOOTH AGAVE	5 GAL. @ 3' O.C.	DETAIL 1 & 3, SHEET L-6.01	54
	S-2	ALOE STRIATA CORAL ALOE	1 GAL. @ 2' O.C.	DETAIL 1 & 3, SHEET L-6.01	29
	S-8	BUXUS MICROPHYLLA VAR. KOREANA 'WINTER GEM' WINTER GEM BOX WOOD	5 GAL. @ 3' O.C.	DETAIL 1 & 3, SHEET L-6.01	78
	S-3	CAREX DIVULSA BERKELEY SEDGE	1 GAL. @ 2' O.C.	DETAIL 1 & 3, SHEET L-6.01	210
	S-4	CALAMAGROSTIS X ACUTIFLORA 'KARL FOERSTER' FEATHER REED GRASS	5 GAL. @ 3' O.C.	DETAIL 1 & 3, SHEET L-6.01	16
	S-5	CHONDROPETALUM TECTORUM SMALL CAPE RUSH	5 GAL. @ 30" O.C.	DETAIL 1 & 3, SHEET L-6.01	117
	S-6	PELARGONIUM x HORTORUM 'INSPIRE SCARLET' GERANIUM INSPIRE	1 GAL. @ 2' O.C.	DETAIL 1 & 3, SHEET L-6.01	11
	S-7	PHORMIUM 'DUET' DWARF VARIEGATED FLAX	1 GAL. @ 2' O.C.	DETAIL 1 & 3, SHEET L-6.01	66
	S-9	PRUNUS CAROLINIANA 'COMPACTA' CAROLINA CHERRY LAUREL	15 GAL. @ 4' O.C.	DETAIL 1 & 3, SHEET L-6.01	117
	S-10	ROSMARINUS OFFICINALIS 'LADY IN WHITE' WHITE ROSEMARY	1 GAL. @ 2' O.C.	DETAIL 1 & 3, SHEET L-6.01	4
	S-11	SALVIA LEUCANTHA MEXICAN BUSH SAGE	5 GAL. @ 4' O.C.	DETAIL 1 & 3, SHEET L-6.01	45
	S-12	SALVIA OFFICINALIS GARDEN SAGE	1 GAL. @ 2' O.C.	DETAIL 1 & 3, SHEET L-6.01	9
	S-13	STACHYS BYZANTINA LAMB'S EAR	1 GAL. @ 2' O.C.	DETAIL 1 & 3, SHEET L-6.01	11

GROUNDCOVER LEGEND

		BOTANICAL NAME COMMON NAME	SIZE	REMARKS	QTY.
	GC-1	ASPIDISTRA ELATIOR 'ASAHI' MORNING SUN CAST IRON PLANT	1 GAL. @ 18" O.C.	DETAIL 1 & 5, SHEET L-6.01	17
	GC-2	CAREX PANSA CALIFORNIA MEADOW SEDGE	LINERS @ 8" O.C.	DETAIL 1 & 5, SHEET L-6.01	1868
	GC-3	OPHIOPOGON JAPONICUS MONDO GRASS	1 GAL. @ 12" O.C.	DETAIL 1 & 5, SHEET L-6.01	269
	GC-4	TRACHELOSPERMUM JASMINOIDES STAR JASMINE	1 GAL. @ 3' O.C.	DETAIL 1 & 5, SHEET L-6.01	31

VINE LEGEND

		BOTANICAL NAME COMMON NAME	SIZE	REMARKS	QTY.
	V-1	CLEMATIS ARMANDII EVERGREEN CLEMATIS	5 GAL.	DETAIL 7, SHEET L-6.01	27

PLANT SYMBOL LEGEND

# — TREE QUANTITY T-1 — TREE VARIETY	LOCATION OF AGRONOMIC SOIL TESTING
	ROOT BARRIER
NOTE: SEE THE SPECIFICATIONS FOR DETAILED INFORMATION ON THESE ITEMS.	

POT LEGEND

		BOTANICAL NAME COMMON NAME	SIZE	REMARKS	QTY.
	P-1 CENTER	PHORMIUM 'DARK DELIGHT' RED NEW ZEALAND FLAX	5 GAL.	DETAIL 8, SHEET L-6.01	12
	P-1 EGDE	SEDUM RUPESTRE 'ANGELINA' ANGELINA STONECROP	1 GAL.	DETAIL 8, SHEET L-6.01	48

NOTES:

1. ALL LANDSCAPE AREAS TO RECEIVE 3" LAYER OF SHREDDED HARDWOOD BARK MULCH.
2. WATER-EFFICIENT AUTOMATIC IRRIGATION SYSTEM TO BE INSTALLED WITH LANDSCAPE INSTALLATION.
3. ALL TREES WITHIN 8' OF HARDSCAPE TO RECEIVE 24" DEEP ROOT BARRIER PLASTIC LINER INSTALLATION.

N

GRAPHIC SCALE

-10 0 5 10 20 40

(IN FEET)
1" = 10'

DIGALERT
DIAL TOLL FREE
1-800-422-4133
AT LEAST TWO DAYS BEFORE YOU DIG
UNDERGROUND SERVICE ALERT OF SOUTHERN CALIFORNIA

BASIS OF BEARINGS:

BEARINGS SHOWN HEREON ARE BASED ON THE CENTERLINE OF 162 ND STREET (FORMERLY MARKET STREET) BEING N 89° 55' 30" E SHOWN ON TRACT NO. 10901, M.B. 254/31-32

BENCHMARK:

THE CITY OF GARDENA BENCHMARK NO. 5D-15 ELEV. = 43.508

CONSULTANT:

PREPARED UNDER THE SUPERVISION OF:

RJM DESIGN GROUP
31591 Camino Capistrano
San Juan Capistrano, CA 92675
www.RJMdesigngroup.com
(949) 493-2690 fax
(949) 493-2600 phone

REGISTERED LANDSCAPE ARCHITECT
STATE OF CALIFORNIA
09/30/2023
RENEWAL DATE
10/04/2023
Date

REVISIONS

NO.	DESCRIPTION	DATE	APPROVED
1	90% CD SUBMITTAL	12/15/2022	
2	100% CD SUBMITTAL	05/01/2023	
3	FINAL SUBMITTAL	10/02/2023	

CITY OF GARDENA
DEPARTMENT OF PUBLIC WORKS - ENGINEERING

PLANTING PLAN

COMMUNITY AQUATICS & SENIOR CENTER

L-5.01

	INITAL	DATE
DESIGNED BY	EC	11/14/2022
DRAWN BY	TP	04/20/2023
CHECKED BY	EC	10/02/2023

APPROVED BY:

DATE DIRECTOR OF PUBLIC WORKS

SHT. 36 OF 195 DWG. NO. 5-2606

PLOT TIME: 10/4/2023 8:36:00 AM
FILE PATH: P:\RJM DESIGN GROUP, INC\GARDENA AQUATIC & SENIOR CENTER\DWG\PLANS\L-5.01 PLANTING PLAN.DWG
PLOTTED BY: Tim Phillips

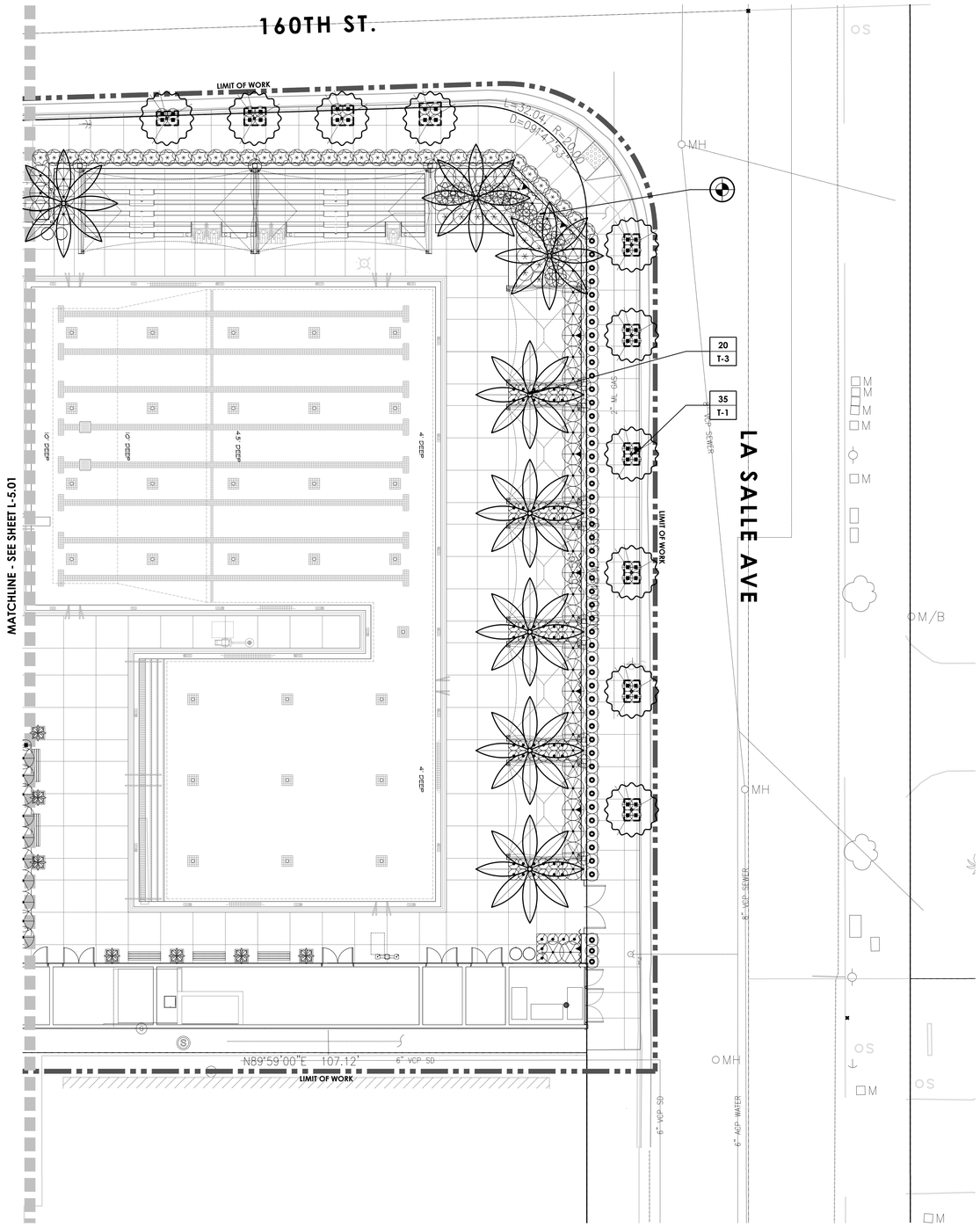

TREE LEGEND

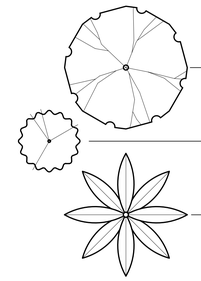

	BOTANICAL NAME COMMON NAME	SIZE	REMARKS	QTY.
T-1	ARBUTUS MARINA STRAWBERRY TREE	48" BOX	DETAIL 2 & 6, SHEET L-6.01 30' H X 20' W STD.	3
T-2	LAGERSTOEMIA INDICA X FAURIEI 'BILOXI' BILOXI CRAPE MYRTLE	24" BOX	DETAIL 2 & 6, SHEET L-6.01 15' H X 10' W STD.	35
T-3	PHOENIX DACTYLIFERA 'MEDJOOL' DATE PALM	25' B.T.H.	DETAIL 4 & 6, SHEET L-6.01 60' H X 20' W STD.	20

SHRUB LEGEND

	BOTANICAL NAME COMMON NAME	SIZE	REMARKS	QTY.
S-1	AGAVE DESMETTIANA 'VARIEGATA' VARIEGATED SMOOTH AGAVE	5 GAL. @ 3' O.C.	DETAIL 1 & 3, SHEET L-6.01	54
S-2	ALOE STRIATA CORAL ALOE	1 GAL. @ 2' O.C.	DETAIL 1 & 3, SHEET L-6.01	29
S-8	BUXUS MICROPHYLLA VAR. KOREANA 'WINTER GEM' WINTER GEM BOX WOOD	5 GAL. @ 3' O.C.	DETAIL 1 & 3, SHEET L-6.01	78
S-3	CAREX DIVULSA BERKELEY SEDGE	1 GAL. @ 2' O.C.	DETAIL 1 & 3, SHEET L-6.01	210
S-4	CALAMAGROSTIS X ACUTIFLORA 'KARL FOERSTER' FEATHER REED GRASS	5 GAL. @ 3' O.C.	DETAIL 1 & 3, SHEET L-6.01	16
S-5	CHONDROPETALUM TECTORUM SMALL CAPE RUSH	5 GAL. @ 30" O.C.	DETAIL 1 & 3, SHEET L-6.01	117
S-6	PELARGONIUM x HORTORUM 'INSPIRE SCARLET' GERANIUM INSPIRE	1 GAL. @ 2' O.C.	DETAIL 1 & 3, SHEET L-6.01	11
S-7	PHORMIUM 'DUET' DWARF VARIEGATED FLAX	1 GAL. @ 2' O.C.	DETAIL 1 & 3, SHEET L-6.01	66
S-9	PRUNUS CAROLINIANA 'COMPACTA' CAROLINA CHERRY LAUREL	15 GAL. @ 4' O.C.	DETAIL 1 & 3, SHEET L-6.01	117
S-10	ROSMARINUS OFFICINALIS 'LADY IN WHITE' WHITE ROSEMARY	1 GAL. @ 2' O.C.	DETAIL 1 & 3, SHEET L-6.01	4
S-11	SALVIA LEUCANTHA MEXICAN BUSH SAGE	5 GAL. @ 4' O.C.	DETAIL 1 & 3, SHEET L-6.01	45
S-12	SALVIA OFFICINALIS GARDEN SAGE	1 GAL. @ 2' O.C.	DETAIL 1 & 3, SHEET L-6.01	9
S-13	STACHYS BYZANTINA LAMB'S EAR	1 GAL. @ 2' O.C.	DETAIL 1 & 3, SHEET L-6.01	11

GROUNDCOVER LEGEND

	BOTANICAL NAME COMMON NAME	SIZE	REMARKS	QTY.
GC-1	ASPIDISTRA ELATIOR 'ASAHI' MORNING SUN CAST IRON PLANT	1 GAL. @ 18" O.C.	DETAIL 1 & 5, SHEET L-6.01	17
GC-2	CAREX PANSA CALIFORNIA MEADOW SEDGE	LINERS @ 8" O.C.	DETAIL 1 & 5, SHEET L-6.01	1868
GC-3	OPHIOPOGON JAPONICUS MONDO GRASS	1 GAL. @ 12" O.C.	DETAIL 1 & 5, SHEET L-6.01	269
GC-4	TRACHELOSPERMUM JASMINOIDES STAR JASMINE	1 GAL. @ 3' O.C.	DETAIL 1 & 5, SHEET L-6.01	31

VINE LEGEND

	BOTANICAL NAME COMMON NAME	SIZE	REMARKS	QTY.
V-1	CLEMATIS ARMANDII EVERGREEN CLEMATIS	5 GAL.	DETAIL 7, SHEET L-6.01	27

PLANT SYMBOL LEGEND

# / T-1 — TREE QUANTITY / TREE VARIETY	LOCATION OF AGRONOMIC SOIL TESTING
	ROOT BARRIER

NOTE: SEE THE SPECIFICATIONS FOR DETAILED INFORMATION ON THESE ITEMS.

POT LEGEND

	BOTANICAL NAME COMMON NAME	SIZE	REMARKS	QTY.
P-1 CENTER	PHORMIUM 'DARK DELIGHT' RED NEW ZEALAND FLAX	5 GAL.	DETAIL 8, SHEET L-6.01	12
P-1 EGDE	SEDUM RUPESTRE 'ANGELINA' ANGELINA STONECROP	1 GAL.	DETAIL 8, SHEET L-6.01	48

NOTES:

1. ALL LANDSCAPE AREAS TO RECEIVE 3" LAYER OF SHREDDED HARDWOOD BARK MULCH.
2. WATER-EFFICIENT AUTOMATIC IRRIGATION SYSTEM TO BE INSTALLED WITH LANDSCAPE INSTALLATION.
3. ALL TREES WITHIN 8' OF HARDSCAPE TO RECEIVE 24" DEEP ROOT BARRIER PLASTIC LINER INSTALLATION.

GRAPHIC SCALE

-10 0 5 10 20 40

(IN FEET)
1" = 10'

DIGALERT
DIAL TOLL FREE
1-800-422-4133
AT LEAST TWO DAYS BEFORE YOU DIG
UNDERGROUND SERVICE ALERT OF SOUTHERN CALIFORNIA

BASIS OF BEARINGS:

BEARINGS SHOWN HEREON ARE BASED ON THE CENTERLINE OF 162 ND STREET (FORMERLY MARKET STREET) BEING N 89° 55' 30" E SHOWN ON TRACT NO. 10901, M.B. 254/31-32

BENCHMARK:

THE CITY OF GARDENA BENCHMARK NO. 5D-15 ELEV. = 43.508

CONSULTANT:

PREPARED UNDER THE SUPERVISION OF:

RJM DESIGN GROUP
31591 Camino Capistrano
San Juan Capistrano, CA 92675
www.RJMdesigngroup.com
(949) 493-2690 fax
(949) 493-2600 phone

REGISTERED LANDSCAPE ARCHITECT — STATE OF CALIFORNIA — 04/30/2025 RENEWAL DATE

REVISIONS

NO.	DESCRIPTION	DATE	APPROVED
1	90% CD SUBMITTAL	12/15/2022	
2	100% CD SUBMITTAL	05/01/2023	
3	FINAL SUBMITTAL	10/02/2023	

CITY OF GARDENA
DEPARTMENT OF PUBLIC WORKS - ENGINEERING

PLANTING PLAN

COMMUNITY AQUATICS & SENIOR CENTER

L-5.02

	INITAL	DATE
DESIGNED BY	EC	11/14/2022
DRAWN BY	TP	04/20/2023
CHECKED BY	EC	10/02/2023

APPROVED BY:

DATE DIRECTOR OF PUBLIC WORKS

SHT. 37 OF 195 DWG. NO. 5-2606

PLOT DATE: 10/2/2023 4:20:45 PM
FILE PATH: G:\My Drive\RJM Design Group\Projects\2022\2202 Gardena Aquatics & Senior Center\04 CD\L-5.02 PLANTING PLAN.dwg
PLOTTED BY: Tim Phillips

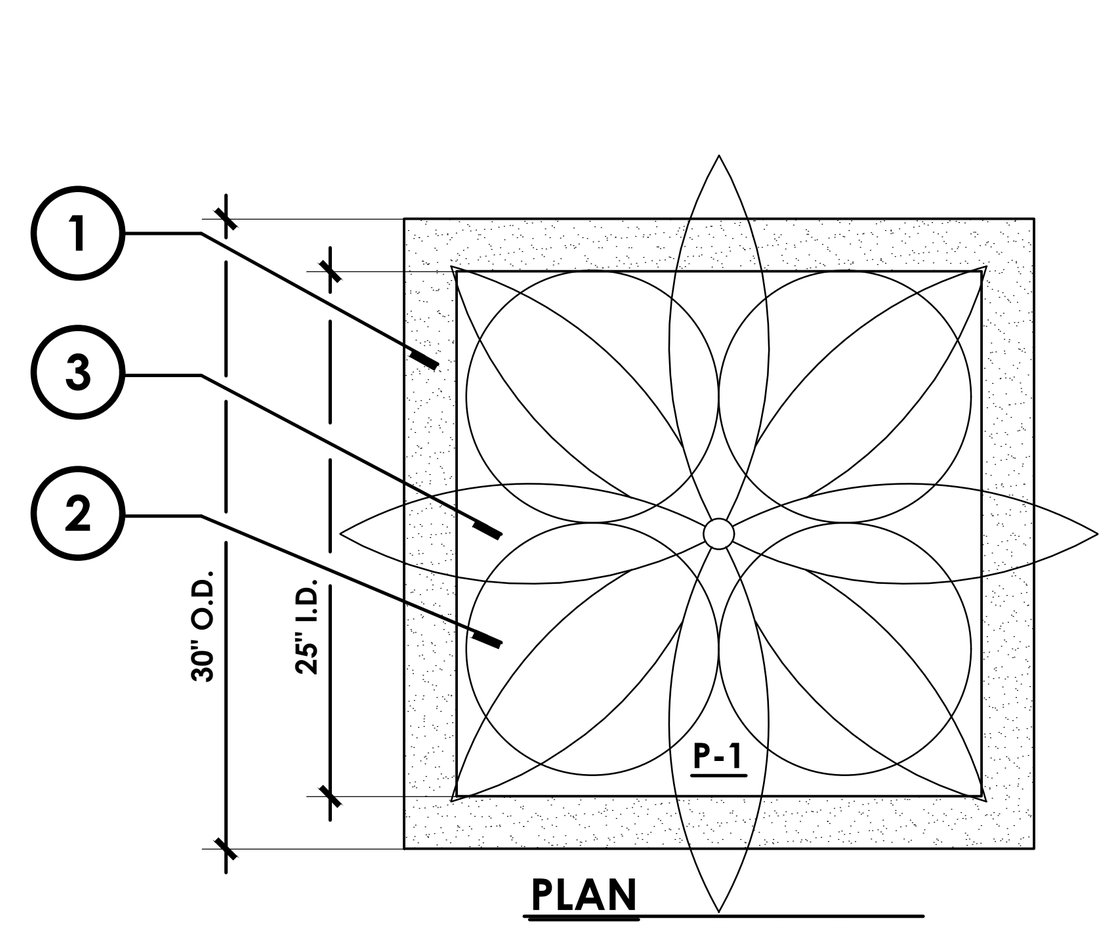

PLAN
SCALE: 1"=1'-0"

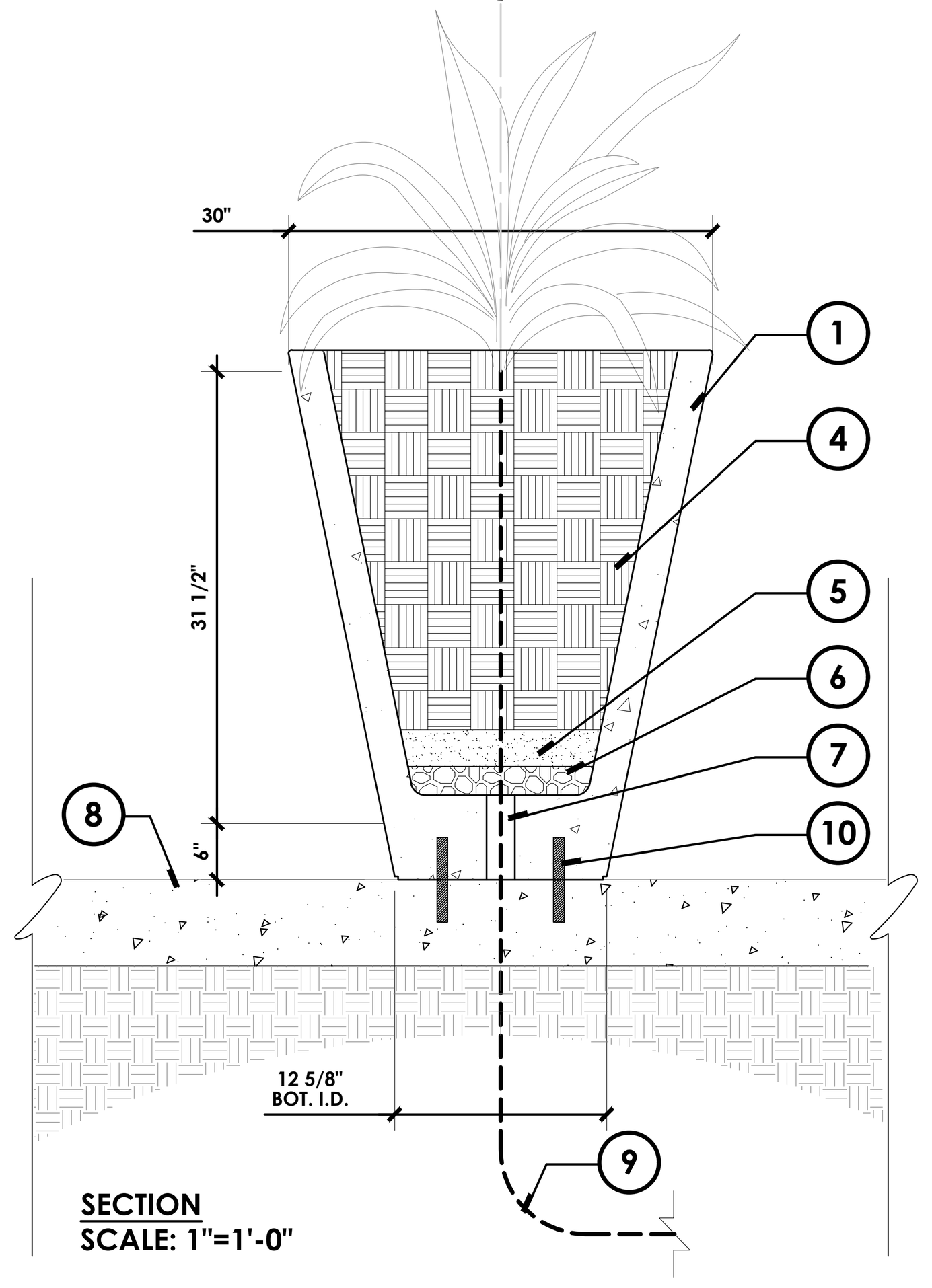

SECTION
SCALE: 1"=1'-0"

LEGEND:

1. PRECAST SQUARE WEDGE PLANTER. MODEL: QS-WE3037P BY QCP CORP. COLOR: FRENCH GRAY. CONTACT: BRIAN GOTZ AT (714) 309-6564. INSTALL PER DETAIL 5, SHEET L-2.05.
2. EDGE PLANTS - SEE PLANTING LEGEND AND PLAN FOR TYPE AND LOCATION.
3. CENTER PLANT - SEE PLANTING LEGEND AND PLAN FOR TYPE AND LOCATION.
4. PLANTER BACK FILL MIX - SEE PRECAST POT BACKFILL NOTES THIS DETAIL.
5. PROVIDE 4" DEEP WASHED PLASTER SAND, TYP.
6. PROVIDE 3" DEEP PEA GRAVEL WRAPPED WITH 140ONC MIRAFI FILTER FILTER FABRIC OR APPROVED EQUAL.
7. STANDARD 2" DIAMETER DRAIN HOLE (PER MANUFACTURER).
8. ADJACENT HARDSCAPE - SEE CONSTRUCTION PLAN.
9. IRRIGATION LATERAL LINE. SEE IRRIGATION PLANS.
10. ANCHOR PER MANUFACTURERS LATEST RECOMMENDATIONS AND SPECIFICATIONS. SEE DETAIL 5, SHEET L-2.05.

NOTES

A. PLANTER BACK FILL MIX TO BE AGUINAGA TRADITIONAL CONTAINER MIX FOR BIDDING PURPOSES ONLY. FINAL SELECTION OF POT PLANTING MIX TO BE DETERMINED WITH SUBMITTAL

8 POT PLANTING

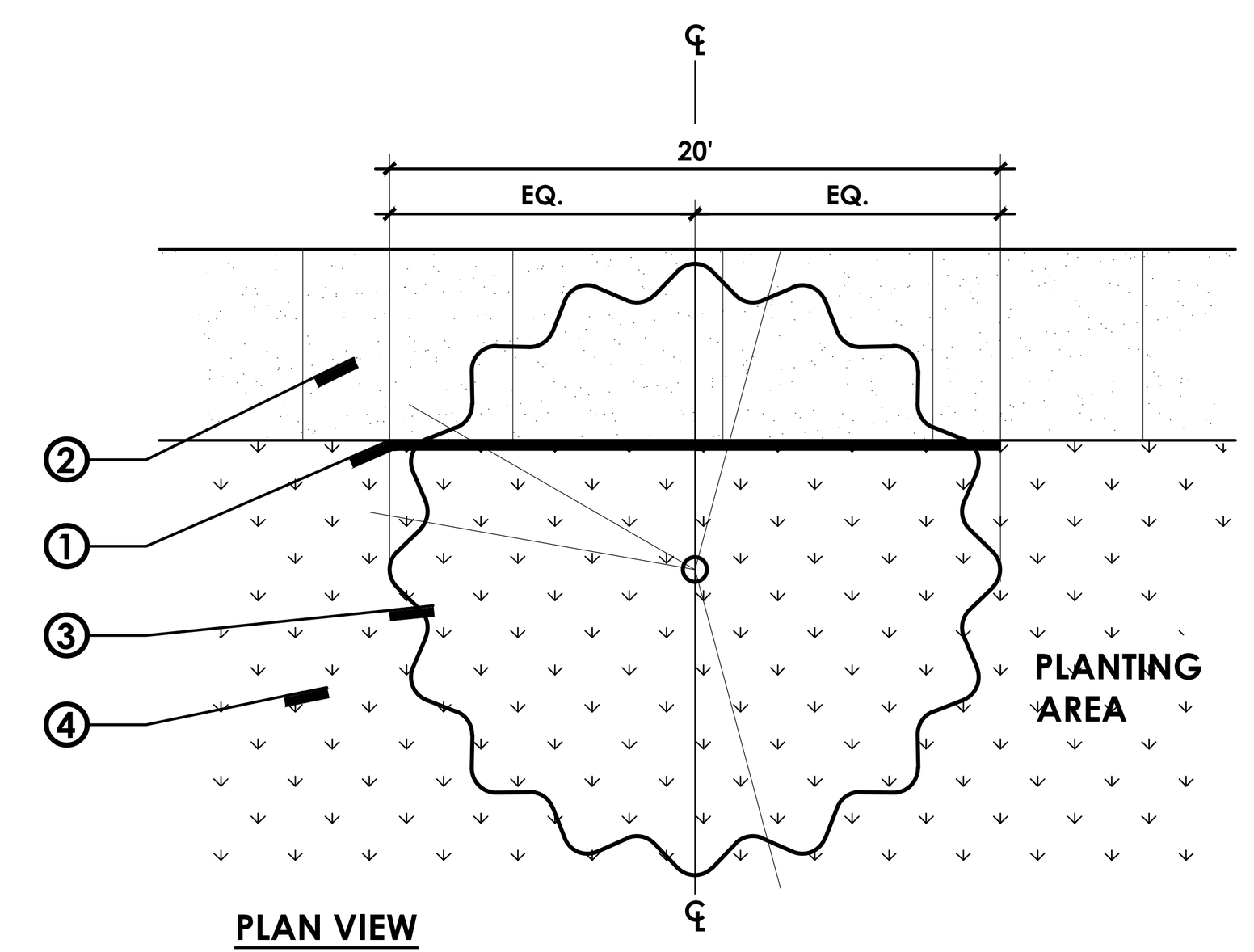

PLAN VIEW
3/16" - 1'-0"

LEGEND

1. DEEP ROOT BARRIER. ALL TREES PLANTED WITHIN 10' OF ANY HARDSCAPE ELEMENT (SIDEWALKS, WALLS, D.G., PAVERS, CURBS, ETC.) SHALL RECEIVE ROOT BARRIERS BY DEEP ROOT CORP. MODEL #UB 24-2. CONTACT INFO: (415) 781-9700. INSTALL PANELS PER MANUFACTURER'S RECOMMENDATIONS. SEE SPECIFICATIONS.
2. ADJACENT HARDSCAPE. SEE CIVIL ENGINEER'S PLANS.
3. TREE.
4. ADJACENT LANDSCAPE.

NOTES

A. ALL TREES WITHIN 10' OF HARDSCAPE TO HAVE DEEP ROOT BARRIERS INSTALLED AT THE TIME OF PLANTING.

6 ROOT BARRIER

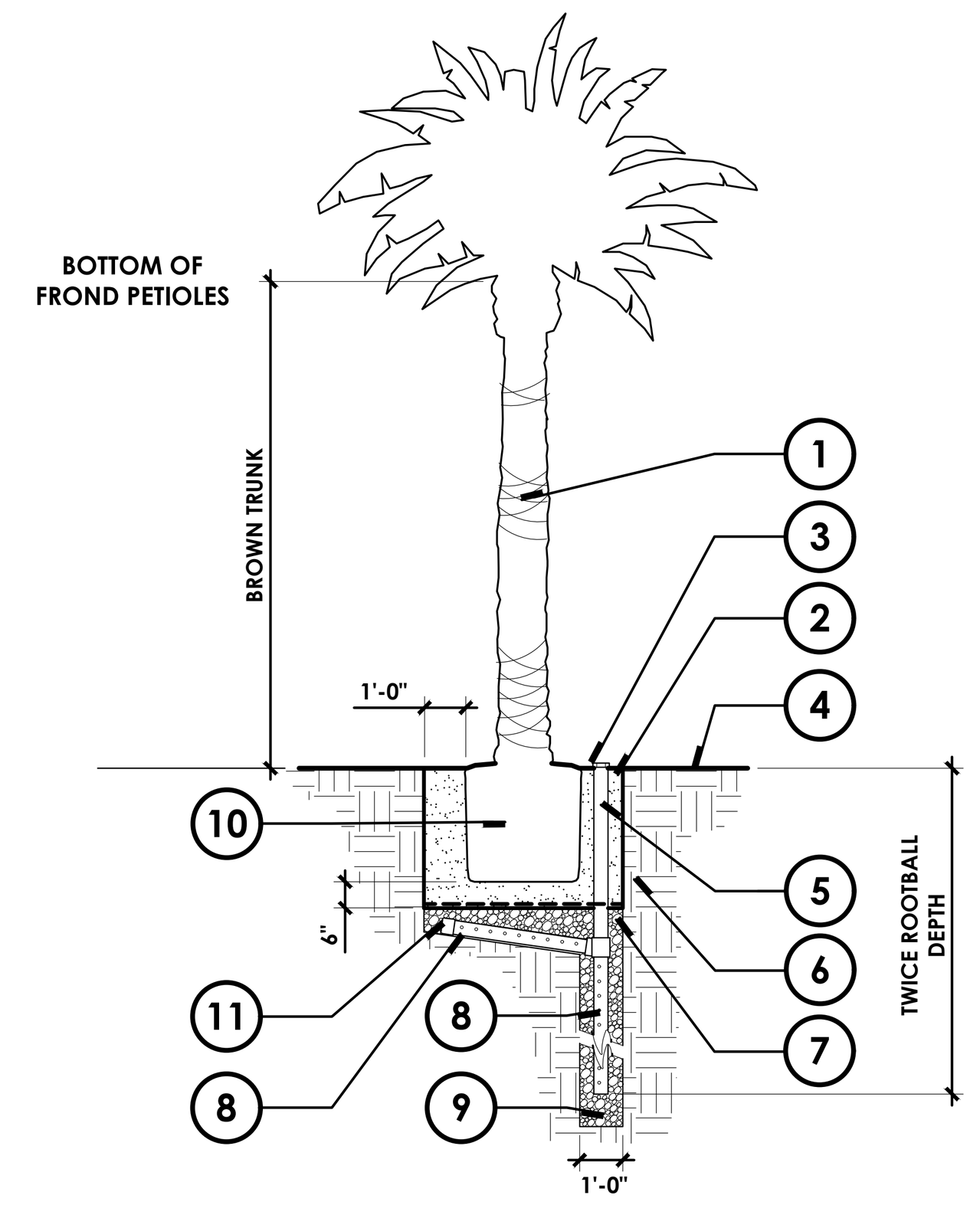

SECTION
N.T.S.

LEGEND:

1. TRUNK - SIZE PER PLANT LEGEND.
2. AMENDED SAND BACKFILL PER SPECIFICATIONS.
3. PVC CAP - BLACK, REMOVABLE FOR OBSERVATION.
4. FINISH GRADE.
5. 4" DIA. PVC PIPE.
6. NATIVE SOIL.
7. FILTER FABRIC, CONTINUOUS AT BOTTOM OF PLANT PIT WITH A MIN. 6" WRAP-UP SIDES.
8. 4" DIA. PVC PERFORATED PIPE. GRADE AND SLOPE FOR DRAINAGE.
9. GRAVEL SUMP BACKFILL, 3/4" CRUSHED AGGREGATE.
10. PALM ROOTBALL, MIN. SIZE PER `PALM TREE EXPERT' - REFER TO SPECIFICATIONS.
11. PVC END CAP. SLOPE TO DRAIN, MIN. 2% .

4 PALM TREE PLANTING

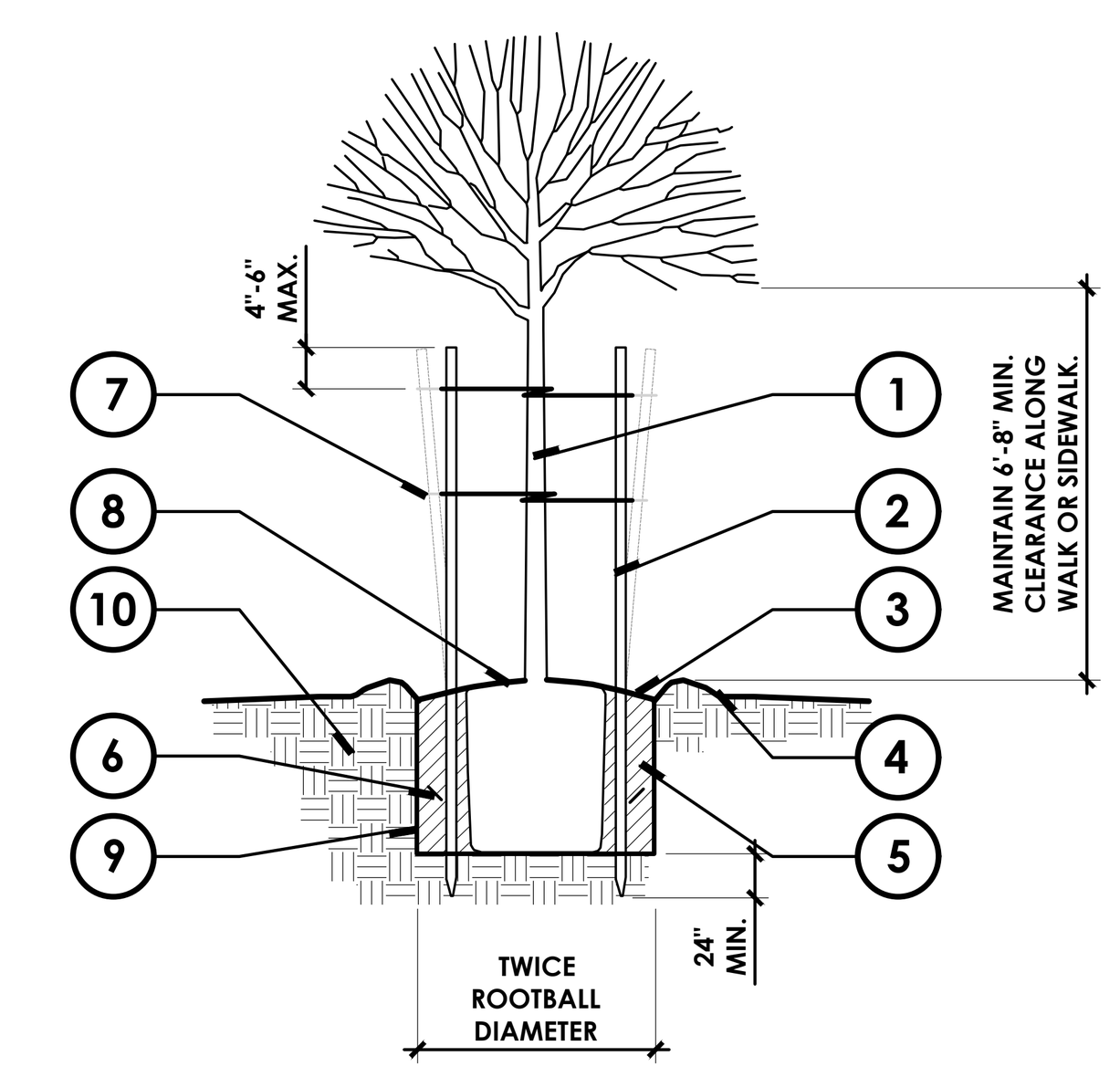

SECTION
N.T.S.

LEGEND:

1. TREE - CENTER IN PIT.
2. LODGE POLE TREE STAKES PER SPECIFICATIONS (2 PER TREE). USE (10 FT LENGTH) STAKES AT ALL 15 GAL. AND 24" BOX TREES, TYP. KEEP CLEAR OF ROOTBALL. REMOVE TOP OF STAKE TO 4" BELOW LOWEST BRANCH. SET STAKES PARALLEL TO PREVAILING WINDS.
3. 2" WATER BASIN.
4. FINISH GRADE.
5. AMENDED BACKFILL - REFER TO SPECIFICATIONS.
6. PLANT TABLET - REFER TO SPECIFICATIONS FOR QUANTITY AND PLACEMENT.
7. TREE TIES - 2 V.I.T. TWIST BRACE (TB24/TB36) BY STRONGBOX, (800) 729-1314. INSTALL USING 2-1/2" GALV. SCREWS.
8. SET TOP OF ROOTBALL 2" ABOVE SURROUNDING GRADE AND SLOPE FOR DRAINAGE.
9. SCARIFY SIDES AND BOTTOM OF PLANTING PIT.
10. NATIVE UNDISTURBED SOIL.

NOTES:

A. LODGE POLE TREE STAKES SHALL BE PLUMB OR ANGLED SLIGHTLY OUTWARD AFTER TREE TIES ARE IN PLACE, AS SHOWN.
B. SEE ROOT BARRIER DETAIL 6, THIS SHEET, FOR ALL TREES PLANTED WITHIN 10' OF ANY HARDSCAPE.

2 TREE PLANTING

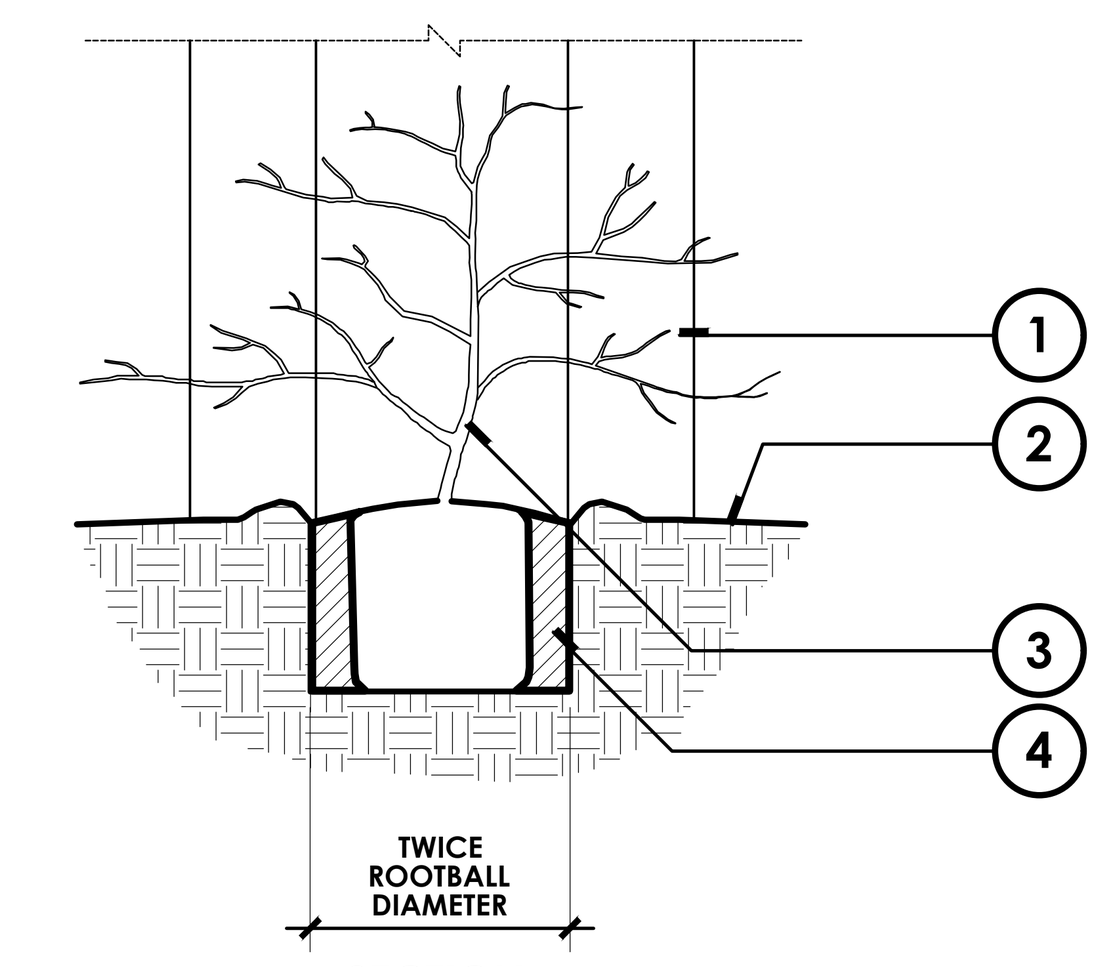

SECTION
N.T.S.

LEGEND:

1. DECORATIVE VINE TRELLIS. SEE CONSTRUCTION PLAN, SHEET L-1.01 FOR LOCATIONS AND DETAIL 2, SHEET L-2.06
2. FINISH GRADE
3. ANGLE PLANT BACK TOWARD TRELLIS AND REMOVE NURSERY STAKE.
4. REFER TO SHRUB PLANTING DETAIL, THIS SHEET FOR PLANTING REQUIREMENTS.

7 VINE PLANTING

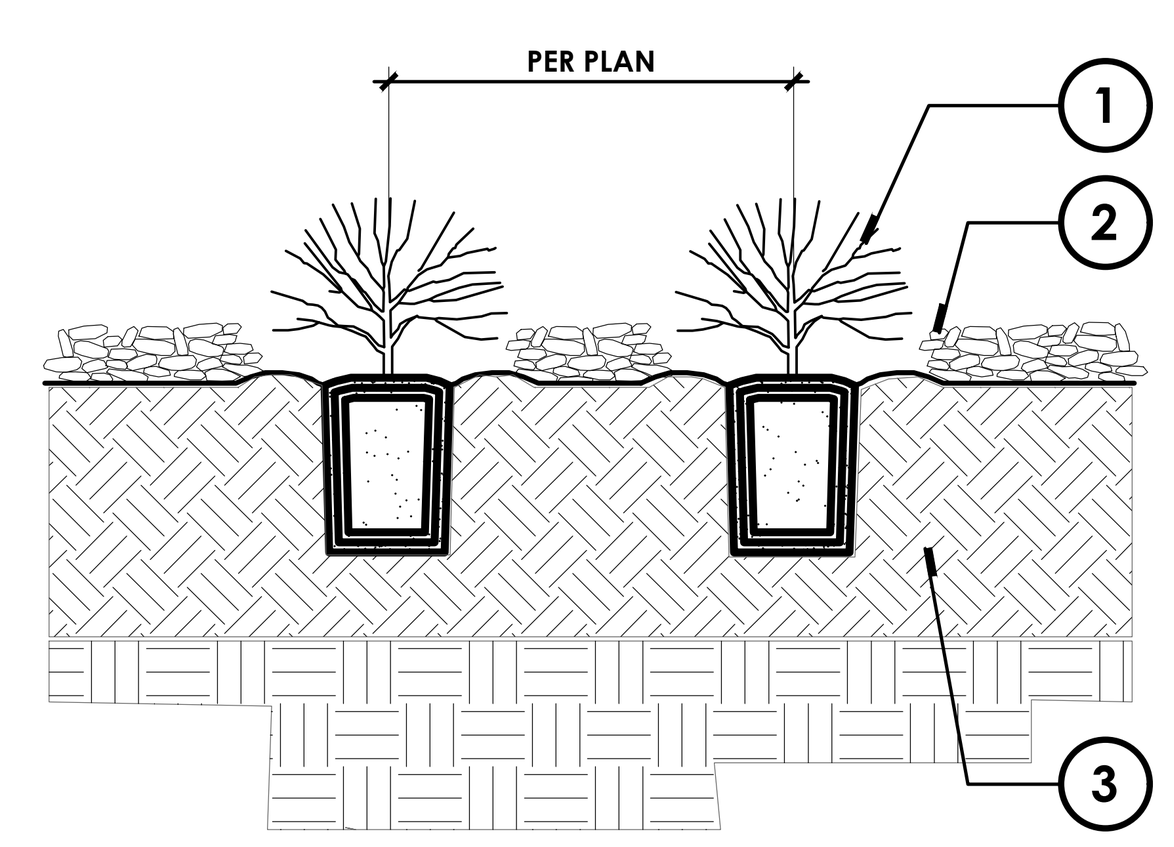

SECTION
N.T.S.

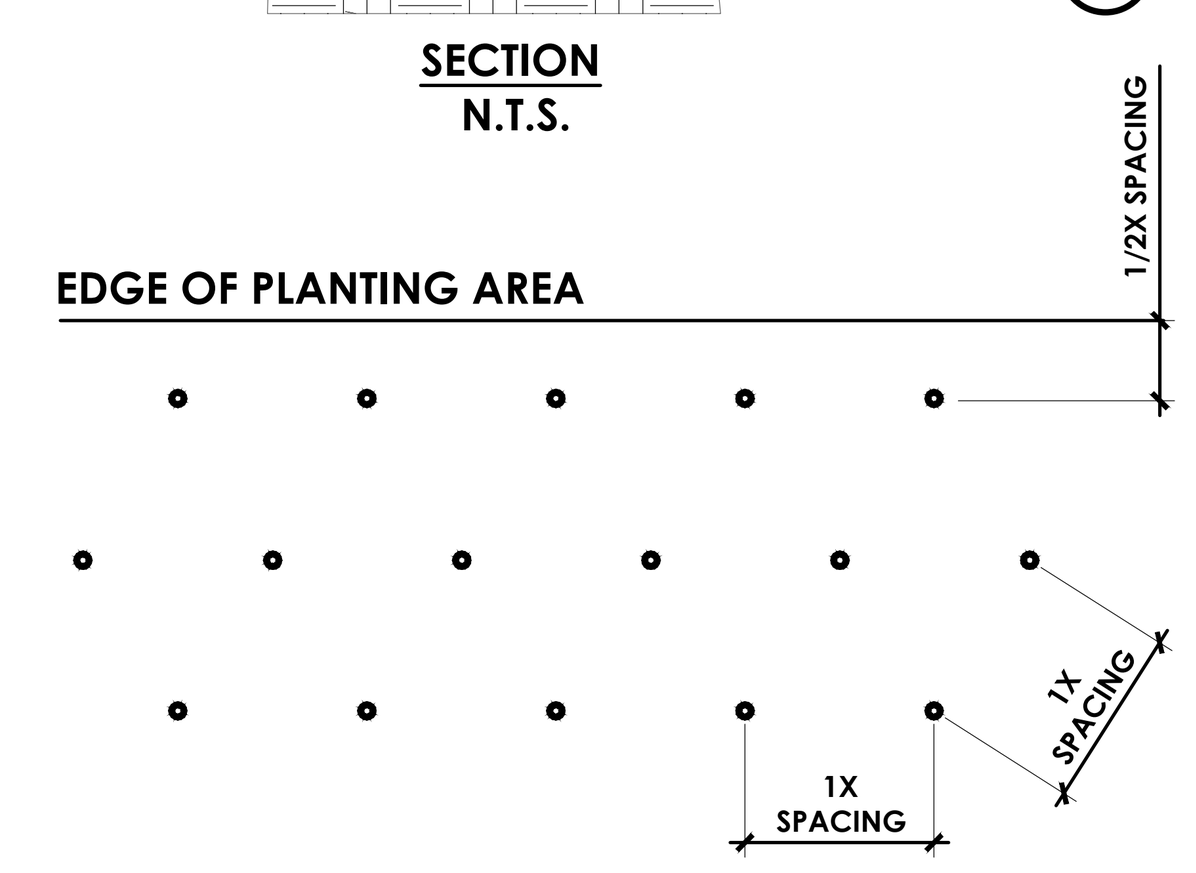

PLAN VIEW
N.T.S.

LEGEND:

1. GROUNDCOVER FROM FLAT, CUTTING, LINER, OR PLANTING CONTAINER.
2. 3" LAYER OF MULCH (DEPTH PER SPECIFICATIONS).
3. PLANTING BED DEPTH PER SPECIFICATIONS.

5 GROUNDCOVER PLANTING

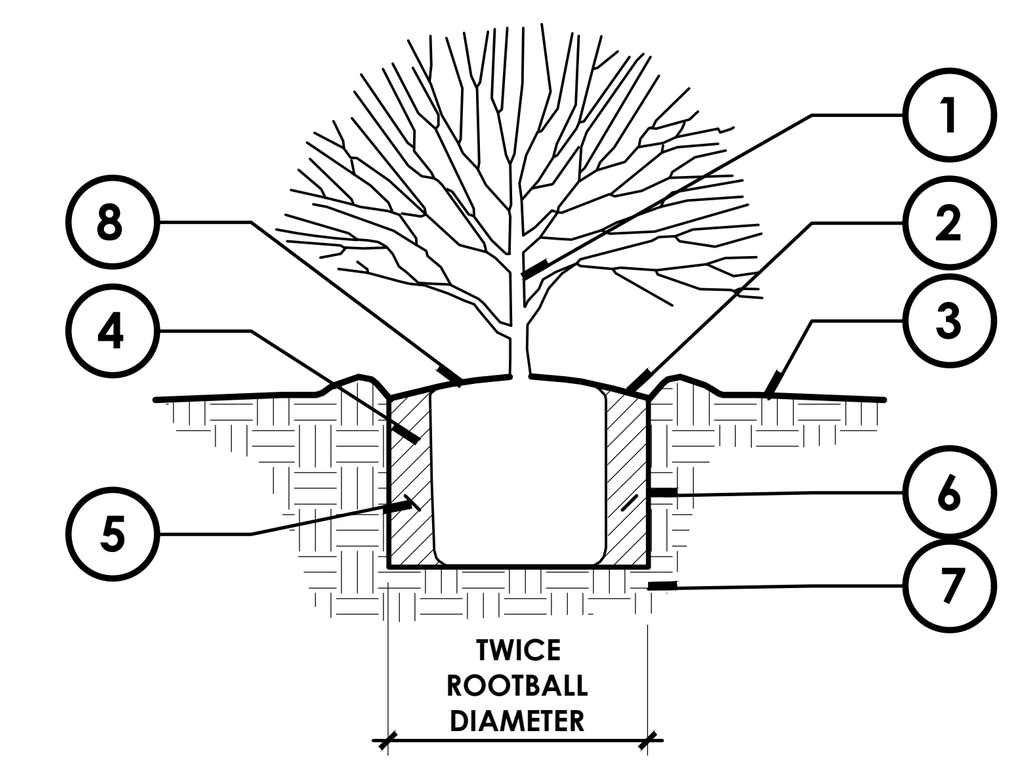

SECTION
N.T.S.

LEGEND:

1. SHRUB - CENTER IN PIT.
2. 2" DEEP WATERING BASIN.
3. FINISH GRADE.
4. AMENDED BACKFILL - REFER TO SPECIFICATIONS.
5. PLANTING TABLETS - REFER TO SPECIFICATIONS FOR QUANTITY AND PLACEMENT.
6. SCARIFY SIDES AND BOTTOM OF PLANTING PIT.
7. NATIVE UNDISTURBED SOIL.
8. SET TOP OF ROOTBALL 2" ABOVE SURROUNDING GRADE AND SLOPE FOR DRAINAGE.

3 SHRUB PLANTING

PLANTING NOTES

1. ALL TREES WITHIN A SPECIES SHALL HAVE MATCHING & UNIFORM FORM.
2. ALL LANDSCAPED AREAS TO RECEIVE AUTOMATED IRRIGATION.
3. REFER TO PLANTING SPECIFICATIONS FOR SOIL PREPARATION, FERTILIZATION, MULCHING, AND OTHER ADDITIONAL PLANTING INFORMATION.
4. ALL PLANT MATERIAL SHALL BE APPROVED BY THE LANDSCAPE ARCHITECT/DISTRICT PRIOR TO INSTALLATION.
5. FINAL LOCATION OF ALL PLANT MATERIALS SHALL BE SUBJECT TO THE APPROVAL OF THE LANDSCAPE ARCHITECT/DISTRICT.
6. CONTRACTOR SHALL NOTIFY THE COUNTY PROJECT MANAGER/COUNTY INSPECTOR 48 HOURS PRIOR TO COMMENCEMENT OF WORK TO COORDINATE PROJECT INSPECTION SCHEDULES.
7. SEE DETAILS AND SPECIFICATIONS FOR STAKING METHOD, PLANT PIT DIMENSIONS AND BACKFILL REQUIREMENTS.
8. IF CONFLICTS ARISE BETWEEN SIZE OF AREAS AND PLANS, CONTRACTOR TO CONTACT LANDSCAPE ARCHITECT FOR RESOLUTION. FAILURE TO MAKE SUCH CONFLICTS KNOWN TO THE LANDSCAPE ARCHITECT WILL RESULT IN CONTRACTOR'S LIABILITY TO RELOCATE THE MATERIALS.
9. CONTRACTOR SHALL SUBMIT FOR APPROVAL PHOTOS OF ALL BOXED TREES. PHOTOS SHOULD INCLUDE A PERSON FOR SCALE PURPOSES. ALL BOX TREES SHALL BE OF QUALITY AS DETERMINED BY THE OWNER/LANDSCAPE ARCHITECT. MATERIAL FOUND UNSUITABLE FOR THE DESIGN OR SPECIFICATION INTENT WILL BE REJECTED. THE CONTRACTOR SHALL ALSO SUBMIT WRITTEN SPECIFICATIONS FOR ALL PLANT MATERIAL SPECIFIED ON THIS PROJECT PRIOR TO PLACING ORDER. FAILURE TO DO SO COULD RESULT IN THE REPLACEMENT (AT CONTRACTOR'S EXPENSE) OF ANY PLANTS DETERMINED UNACCEPTABLE BY LANDSCAPE ARCHITECT/DISTRICT.
10. IT IS THE CONTRACTOR'S RESPONSIBILITY TO FURNISH PLANT MATERIALS FREE OF PESTS OR PLANT DISEASES. PRE-SELECTED OR `TAGGED' MATERIAL MUST BE INSPECTED BY THE CONTRACTOR AND CERTIFIED PEST AND DISEASE FREE. IT IS THE CONTRACTOR'S OBLIGATION TO WARRANTY ALL PLANT MATERIALS PER THE SPECIFICATIONS.
11. CONTRACTOR SHALL BE RESPONSIBLE FOR MAKING HIM/HERSELF FAMILIAR WITH ALL UNDERGROUND UTILITIES, PIPELINES AND STRUCTURES. CONTRACTOR SHALL TAKE SOLE RESPONSIBILITY FOR ANY COST INCURRED DUE TO DAMAGE OF SAID UTILITIES. CONTRACTOR SHOULD CALL UNDERGROUND SERVICE ALERT (2) FULL WORKING DAYS BEFORE COMMENCING ANY DIGGING. PHONE 811 FOR U.S.A
12. CONTRACTOR SHALL NOT PROCEED WITH CONSTRUCTION AS DESIGNED WHEN IT IS OBVIOUS THAT UNKNOWN OBSTRUCTIONS AND/OR GRADE DIFFERENCES EXIST THAT MAY NOT HAVE BEEN KNOWN DURING DESIGN. SUCH CONDITIONS SHALL BE IMMEDIATELY BROUGHT TO THE ATTENTION OF THE COUNTY PROJECT MANAGER. THE CONTRACTOR SHALL ASSUME FULL RESPONSIBILITY FOR ALL NECESSARY REVISIONS DUE TO FAILURE TO GIVE SUCH NOTIFICATION.
13. CONTRACTOR SHALL BE RESPONSIBLE FOR ANY COORDINATION WITH SUBCONTRACTORS AND CONSTRUCTION MANAGER AS REQUIRED TO ACCOMPLISH PLANTING OPERATIONS.
14. LANDSCAPE CONTRACTOR TO RECEIVE SITE GRADED TO +0.10. CONTRACTOR SHALL OBTAIN LETTER OF GRADE CERTIFICATION FROM OWNER PRIOR TO PROJECT EXECUTION.
15. PLANT MATERIAL QUANTITIES ARE GIVEN FOR CONVENIENCE ONLY. PLANT SYMBOLS AND SPECIFIED SPACING SHALL TAKE PRECEDENCE. CONTRACTOR SHALL VERIFY PLANT MATERIAL QUANTITIES PER PLAN.
16. CONTRACTOR TO ASSURE POSITIVE DRAINAGE IN ALL PLANTING AREAS - 2% MINIMUM ALLOWED.
17. AFTER ROUGH GRADES HAVE BEEN ESTABLISHED IN PLANTING AREAS, CONTRACTOR SHALL HAVE SOIL SAMPLES TAKEN AT THE LOCATIONS INDICATED BY ⊕ DESIGNATION (3 TOTAL). CONTRACTOR SHALL INFORM SOIL TESTING LAB OF THE PLANT MATERIAL SPECIFIED IN SOIL TESTING LOCATIONS (NATIVE TREES & SHRUBS, ORNAMENTAL TREES & SHRUBS, PALM TREES, BERMUDA SOD, ETC.) SO THAT APPROPRIATE PLANTING RECOMMENDATIONS CAN BE GIVEN. THESE SAMPLES SHALL BE TESTED BY WAYPOINT ANALYTICAL, OR APPROVED EQUAL. CONTACT: JOE KIEFER (714) 282-8777 FOR SOIL FERTILITY, AGRICULTURAL SUITABILITY TEST AND SOIL PREPARATION RECOMMENDATIONS. TWO SAMPLES SHALL BE TAKEN AT EACH LOCATION: (1) GROUND LEVEL TO 10" DEEP, (2) 24" TO 36" DEEP. EACH SAMPLE SHALL CONTAIN APPROXIMATELY 1 QUART OF SOIL AND BE LABELED PER LOCATION AND DEPTH. CONTRACTOR SHALL INSTALL SOIL PREPARATION AND BACKFILL MIX TO CONFORM TO THESE RECOMMENDATIONS ONLY UPON RECEIPT OF WRITTEN CHANGE ORDER FROM OWNER. SUBMIT SOIL REPORT TO CITY'S ENGINEER PRIOR TO PLANTING.
18. GROUND COVERS AND SHRUBS SHALL BE TRIANGULARLY SPACED, UNLESS OTHERWISE INDICATED.
19. ALL SOIL FOR LANDSCAPE PLANTING AREAS OR BERMS SHALL BE OBTAINED FROM ON- SITE EXCAVATIONS. SHOULD IMPORT SOIL BE NECESSARY, INDICATE SOURCE LOCATION. SEE PROJECT GEOTECHNICAL REPORT. SOIL SHALL BE SANDY LOAM CONTAINING NO TOXIC CHEMICALS OR ELEMENTS WHICH MAY INHIBIT OR RETARD NORMAL PLANT GROWTH. SOIL TESTING RESULTS SHALL BE SUBMITTED AND APPROVED PRIOR TO SOIL IMPLEMENTATION.
20. ALL LANDSCAPED AREAS (EXCLUDING TURF) SHALL BE MULCHED WITH A 3" DEEP LAYER OF MULCH, PER SPECIFICATIONS, AT THE CONCLUSION OF PLANTING OPERATIONS.
21. AT EDGES OF PLANTING AREAS, THE CENTER LINE OF THE LAST ROW OF SHRUBS AND/OR GROUND COVER SHALL BE LOCATED NO FARTHER FROM OR CLOSER TO THE EDGE THAN ONE-HALF THE SPECIFIED ON-CENTER SPACING.
22. REMOVE ALL NURSERY STAKES AND ESPALIER RACKS IMMEDIATELY AFTER INSTALLATION, UPON PROVIDING SUPPORT PER DETAILS, THIS SHEET.
23. ROOT BARRIER NOTE: ALL TREES PLANTED WITHIN 8' OF ANY HARDSCAPE ELEMENT (SIDEWALKS, WALLS, D.G., PAVERS, CURBS, ETC.) SHALL RECEIVE ROOT BARRIER BY "DEEP ROOT CORP.". (714) 898-0863. NUMBER OF PANELS PER TREE PER MANUFACTURER'S RECOMMENDATION. SEE SPECIFICATIONS.
24. ALL MULCH AREAS ON SLOPES TO RECEIVE JUTE NETTING. SEE SPECIFICATIONS.
25. CONTRACTOR SHALL BE RESPONSIBLE FOR MAINTAINING PROTECTION OF ALL EXISTING SHRUB AND TURF AREAS TO REMAIN DURING CONSTRUCTION. DAMAGED SHRUB AND TURF AREAS SHALL BE REPAIRED OR REPLACED AT THE CONTRACTOR'S EXPENSE. TURF AREAS WITHIN EXISTING IRRIGATION RENOVATION/RETROFIT ZONES AS INDICATED ON THE PROJECT IRRIGATION PLANS SHALL BE MAINTAINED AND REPAIRED IF NEEDED WITH NEW SOD.
26. PER PROJECT GEOTECH REPORT: WHERE NEW TREES OR LARGE LARGE SHRUBS ARE TO BE LOCATED IN CLOSE PROXIMITY OF NEW CONCRETE FLATWORK, RIGID MOISTURE / ROOT BARRIERS SHOULD BE PLACED AROUND THE PERIMETER OF THE FLATWORK TO AT LEAST 2 FEET IN DEPTH IN ORDER TO PROTECT THE FLATWORK FROM POTENTIAL ROOT AND MOISTURE DAMAGE. EXISTING MATURE TREES NEED FLATWORK SHOULD ALSO INCLUDE RIGID MOISTURE / ROOT BARRIERS PLACED AT LEAST 2 FEET IN DEPTH BELOW THE TOP OF THE FLATWORK. SEE PLANS AND SPECS FOR LOCATIONS.

1 PLANTING NOTES

DIGALERT
DIAL TOLL FREE
1-800-422-4133
AT LEAST TWO DAYS BEFORE YOU DIG
UNDERGROUND SERVICE ALERT OF SOUTHERN CALIFORNIA

BASIS OF BEARINGS:
BEARINGS SHOWN HEREON ARE BASED ON THE CENTERLINE OF 162 ND STREET (FORMERLY MARKET STREET) BEING N 89° 55' 30" E SHOWN ON TRACT NO. 10901, M.B. 254/31-32

BENCHMARK:
THE CITY OF GARDENA BENCHMARK NO. 5D-15 ELEV. = 43.508

CITY OF GARDENA · FREEWAY CITY · INCORPORATED 1930

CONSULTANT:

PREPARED UNDER THE SUPERVISION OF:

RJM DESIGN GROUP
31591 Camino Capistrano
San Juan Capistrano, CA 92675
www.RJMdesigngroup.com
[949] 493-2690 fax
[949] 493-2600 phone

LICENSED LANDSCAPE ARCHITECT · LARRY P. RYAN · LICENSE NO. 2902 · Signature · 09/30/2025 Renewal Date · 10/04/2023 Date · STATE OF CALIFORNIA

REVISIONS

NO.	DESCRIPTION	DATE	APPROVED
1	90% CD SUBMITTAL	12/15/2022	
2	100% CD SUBMITTAL	05/01/2023	
3	FINAL SUBMITTAL	10/02/2023	

CITY OF GARDENA
DEPARTMENT OF PUBLIC WORKS - ENGINEERING
PLANTING DETAILS
COMMUNITY AQUATICS & SENIOR CENTER
L-6.01

	INITAL	DATE
DESIGNED BY	EC	11/14/2022
DRAWN BY	TP	06/20/2023
CHECKED BY	EC	10/02/2023

APPROVED BY:
DATE DIRECTOR OF PUBLIC WORKS
SHT. 38 OF 195 DWG. NO. 5-2606

FILE PATH: P:\301 GARDENA\301-01 GARDENA AQUATIC & SENIOR CENTER\301-01-CD\301-01-CD-L.501-PP.DWG
PLOT TIME: 06/30/2023 9:00 AM

PROJECT ADDRESS:
1654 W 166TH STREET
GARDENA, CA 90247

PROJECT DESCRIPTION:
NEW SENIOR CENTER AND AQUATICS BUILDING WITH NEW POOL AND POOL EQUIPMENT BUILDING

CODE ANALYSIS
SEE SHEET GEN-2 FOR COMPLETE CODE ANALYSIS

PROJECT SUMMARY

CITY OF GARDENA
BUILDING AND SAFETY DEPARTMENT
1700 W 162ND STREET
GARDENA, CA 90247
P: 310.217.9530

LOCAL FIRE AUTHORITY
LOS ANGELES COUNTY FIRE DEPARTMENT
200 NORTH MAIN STREET, 16TH FLOOR
LOS ANGELES, CA 90012
P: 213.978.3800

GOVERNING AGENCIES

OWNER
CITY OF GARDENA
1700 W 162ND STREET
GARDENA, CA 90247
CONTACT: ALLAN RIGG, PE AICP
P: 310.217.9530

ARCHITECT
SVA ARCHITECTS
6 HUTTON CENTRE DRIVE, SUITE 1150
SANTA ANA,CA 92707
CONTACT: PROJECT MANAGER
P: 949.809.3380

MECHANICAL
ALFATECH
510 WEST 6TH STREET, SUITE 1105
LOS SNGELES, CA 90014
CONTACT: NICK KOURASSIS
P: 213.212.9860

STRUCTURAL
VCA ENGINEERS INC
1041 S GARFIELD AVE #210
ALHAMBRA, CA 91801
CONTACT: ALEX QUINONEZ
P: 323.729.6098

PLUMBING
ALFATECH
510 WEST 6TH STREET, SUITE 1105
LOS SNGELES, CA 90014
CONTACT: MARCIA MCKONE
P: 213.212.9860

ELECTRICAL
FBA ENGINEERS
150 PAULARINO AVENUE SUITE A120
COSTA MESA, CA 92626
CONTACT: STEPHEN ZAJICEK
P: 949.852.9995

PROJECT DIRECTORY

STATEMENT OF GENERAL CONFORMANCE
THE DRAWINGS OR SHEETS LISTED IN THE INDEX ON THIS SHEET HAVE BEEN PREPARED BY OTHER DESIGN PROFESSIONALS OR CONSULTANTS WHO ARE LICENSED AND/OR AUTHORIZED TO PREPARE SUCH DRAWINGS IN THIS STATE. IT HAD BEEN EXAMINED BY ME FOR:

1. DESIGN INTENT AND APPEARS TO MEET THE APPROPRIATE REQUIREMENTS OF TITLE 24, CALIFORNIA CODE OF REGULATIONS AND THE PROJECT SPECIFICATIONS PREPARED BY ME
2. COORDINATION WITH MY PLANS AND SPECIFICATIONS AND IS ACCEPTABLE FOR INCORPORATION INTO THE CONSTRUCTION OF THE PROJECT.

THIS STATEMENT OF GENERAL CONFORMANCE "SHALL" NOT BE CONSTRUED AS RELIEVING ME OF MY RIGHTS, DUTIES AND RESPONSIBILITIES UNDER SECTION 4-336, 4-341 AND 4-344 OF TITLE 24, PART 1 (TITLE 24, PART 1 SECTION 4-317) (B))

I CERTIFY THAT ALL DRAWINGS OR SHEETS LISTED IN THE INDEX ON THIS SHEET (CIVIL, STRUCTURAL, MECHANICAL, PLUMBING, ELECTRICAL, FIRE PROTECTION AND THEATRICAL) ARE IN GENERAL CONFORMANCE AND HAVE BEEN COORDINATED.

GENERAL CONFORMANCE STATEMENT

SVA ARCHITECTS IS THE DESIGNATED ARCHITECT OF RECORD AS REQUIRED BY THE STATE OF CALIFORNIA. THE ARCHITECT OF RECORD SHALL REVIEW SUBMITTALS AND COORDINATE SUBMITTALS AND DEFERRED SUBMITTALS THROUGH THE CITY OF GARDENA. DEFERRED SUBMITTALS SHALL NOT BE INSTALLED UNTIL THEIR DESIGN AND SUBMITTAL DOCUMENTS HAVE BEEN APPROVED BY THE CITY OF GARDENA.

THE BUILDING OFFICIAL SHALL BE NOTIFIED IN WRITING BY THE OWNER IF THE ARCHITECT OF RECORD IS CHANGED OR IS UNABLE TO CONTINUE TO PERFORM THE DUTIES. THE OWNER SHALL DESIGNATE A SUBSTITUTE ARCHITECT OR ENGINEER OF RECORD WHO SHALL PERFORM ALL OF THE DUTIES REQUIRED OF THE ORIGINAL ARCHITECT OF RECORD.

REVIEW AND COMMENT ON SUBMITTALS AND DEFERRED SUBMITTALS SHALL NOT RELIEVE THE AUTHOR OF THE DOCUMENTS OR THE CONTRACTOR FROM COMPLIANCE WITH ALL APPLICABLE CODES AND THE REQUIREMENTS OF THE DRAWINGS AND SPECIFICATIONS. THE REVIEW IS ONLY FOR GENERAL CONFORMANCE WITH THE DESIGN CONCEPT OF THE PROJECT AND GENERAL COMPLIANCE WITH INFORMATION GIVEN IN THE CONTRACT DOCUMENTS. THE CONTRACTOR IS RESPONSIBLE FOR CONFIRMING AND CORRELATING ALL QUANTITIES AND DIMENSIONS, SELECTING FABRICATION PROCESSES AND TECHNIQUES OF CONSTRUCTION, COORDINATING HIS WORK WITH THAT OF OTHER TRADES, AND PERFORMING HIS WORK IN A SAFE AND SATISFACTORY MANNER.

ARCHITECT OF RECORD

1. THESE DOCUMENTS AND THE IDEAS AND DESIGNS INCORPORATED HEREIN, AS AN INSTRUMENT OF PROFESSIONAL SERVICE, ARE THE PROPERTY OF SVA ARCHITECTS, INC., AND ARE NOT TO BE USED, IN WHOLE OR IN PART FOR ANOTHER PROJECT WITHOUT THE WRITTEN AUTHORIZATION OF SVA ARCHITECTS, INC.

2. THE WORK SHOWN ON THESE DRAWINGS AS EXISTING CONDITIONS WAS PREPARED FROM INFORMATION FURNISHED BY THE OWNER. WHILE THIS INFORMATION IS BELIEVED TO BE RELIABLE, SVA ARCHITECTS,INC.. IS NOT RESPONSIBLE FOR THE ACCURACY OR ADEQUACY OF ANY WORK SHOWN AS EXISTING NOR IS SVA ARCHITETS, INC. RESPONSIBLE FOR ANY ERRORS OR OMISSIONS WHICH MAY HAVE BEEN INCORPORATED INTO THESE DRAWINGS AS A RESULT.

3. EACH BIDDER SHALL POSSESS AT THE TIME OF BID A CLASS B OR THE APPROPRIATE CLASS C CONTRACTOR'S LICENSE PURSUANT TO PUBLIC CONTRACT CODE SECTION 3300 AND BUSINESS AND PROFESSIONS CODE SECTION 7028.15. THE SUCCESSFUL BIDDER MUST MAINTAIN THE LICENSE THROUGHOUT THE DURATION OF THIS CONTRACT.

4. CONTRACTOR IS RESPONSIBLE FOR FIRE SAFETY DURING CONSTRUCTION AND THE DURATION OF THIS CONTRACT PER 2013 CALIFORNIA FIRE CODE, CHAPTER 33.

5. INSPECTOR OF RECORD REQUIREMENTS: A. ONE OR MORE INSPECTORS EMPLOYED BY THE OWNER IN ACCORDANCE WITH THE REQUIREMENTS OF TITLE 24 OF THE CALIFORNIA CODE OF REGULATIONS WILL BE ASSIGNED TO THE WORK. THE INSPECTORS DUTIES ARE SPECIFICALLY DEFINED IN SECTION 4-342 OF SAID TITLE 24, PART 1.

6. ALL CONSTRUCTION SHALL BE IN ACCORDANCE WITH THE REQUIREMENTS OF THE APPLICABLE CODES. ALL ENGINEERING SHALL COMFORM WITH ALL APPLICABLE MUNICIPAL, STATE AND FEDERAL REGULATIONS HAVING JURISDICTION INCLUDING ACCESSIBILITY STANDARDS AND ADA REQUIREMENTS.

7. GRADING PLANS, DRAINAGE IMPRPOVEMENTS, ROAD AND ACCESS REQUIREMENTS AND ENVIROMENTAL HEALTH CONCIDERATIONS SHALL COMPLY WITH ALL LOCAL ORDINANCES.

8. DRINKING WATER SHALL COMPLY WITH ALL LOCAL HEALTH DEPARTMENT REQUIREMENTS.

9. DO NOT SCALE THE DRAWINGS. THE DRAWINGS ARE NOT NECESSARILY TO SCALE. THE CONTRACTOR SHALL VERIFY ALL CONDITIONS AND DIMENSIONS IN THE FIELD PRIOR TO BIDDING AND START OF CONSTRUCTION. IF DISCREPANCIES ARE FOUND, THE ARCHITECT SHALL BE NOTIFIED FOR CLARIFICATION BEFORE COMMENCING WORK.

10. ALL DIMENSIONS ARE TO FACE OF CONCRETE, FACE OF MASONRY UNITS, CENTERLINE OF COLUMNS AND BEAMS, OR FACE OF STUDS, UNLESS OTHERWISE NOTED. FINISH FLOOR ELEVATIONS ARE TO TOP OF CONCRETE SLAB OR TOP OF INTERIOR PAVING UNLESS NOTED OTHERWISE. CEILING HEIGHT DIMENSIONS ARE TO FINISHED SURFACES UNLESS NOTED OTHERWISE.

11. THE CIVIL, STRUCTURAL, MECHANICAL, PLUMBING, AND ELECTRICAL DRAWINGS ARE SUPPLEMENTAL TO THE ARCHITECTURAL DRAWINGS. IT SHALL BE THE RESPONSIBILITY OF THE CONTRACTOR TO CHECK WITH THE ARCHITECTURAL DRAWINGS BEFORE PROCEEDING WITH INSTALLATION OF CIVIL, STRUCTURAL MECHANICAL, PLUMBING, AND ELECTRICAL WORK. SHOULD THERE BE ANY DISCREPANCIES BETWEEN THE ARCHITECT'S AND THE CONSULTING ENGINEER'S DRAWINGS AND SPECIFICATIONS THAT WOULD CAUSE A CONFLICT, IT SHALL BE BROUGHT TO THE ARCHITECTS ATTENTION FOR CLARIFICATION PRIOR TO INSTALLATION OF SAID WORK. ANY WORK INSTALLED IN CONFLICT WITH THE ARCHITECTURAL DRAWINGS SHALL BE CORRECTED BY THE CONTRACTOR AT HIS EXPENSE AND AT NO ADDITIONAL COST TO THE OWNER OR ARCHITECT.

12. ALL SYMBOLS AND ABBREVIATIONS USED ON THE DRAWINGS ARE CONSIDERED TO BE CONSTRUCTION STANDARDS. IF THE CONTRACTOR HAS QUESTIONS REGARDING ABBREVIATIONS OR THEIR EXACT MEANING, THE ARCHITECT SHALL BE NOTIFIED FOR CLARIFICATION.

13. DETAILS MARKED "TYPICAL" SHALL APPLY IN ALL SIMILAR CASES UNLESS SPECIFICALLY INDICATED OTHERWISE.

14. THERE SHALL BE NO TRENCHES OR EXCAVATIONS 5' OR MORE IN DEPTH INTO WHICH A PERSON IS REQUIRED TO DECEND UNLESS A PERMIT IS OBTAINED FROM THE STATE OF CALIFORNIA DIVISION OF INDUSTRIAL SAFETY PRIOR TO THE ISSUANCE OF A BUILDING OR GRADING PERMIT.

15. THE CONSTRUCTION OR DEMOLITION OF ANY BUILDING, STRUCTURE, SCAFFOLDING OR FALSEWORK MORE THAN 3 STORIES OR 36' IN HEIGHT REQUIRES A PERMIT FROM THE STATE OF CALIFORNIA DIVISION OF INDUSTRIAL SAFETY PRIOR TO THE ISSUANCE OF A BUILDING PERMIT.

16. ALL CONSTRUCTION SHALL PERFORMED IN ACCORDANCE WITH THE STATE CONSTRUCTION SAFETY ORDERS ENFORCED BY THE STATE DIVISION OF INDUSTRIAL SAFETY.

17. DIMENSIONS AND CONDITIONS AT THE JOB SITE SHALL BE VERIFIED BY ALL CONTRACTORS. IT IS THE RESPONSIBILITY OF THE CONTRACTOR TO EXAMINE THE EXISTING CONDITIONS PRIOR TO SUBMITTING BIDS TO THE OWNER SINCE PROPOSALS MUST TAKE INTO CONSIDERATION ALL SUCH CONDITIONS THAT MAY AFFECT THE WORK. DISCREPANCIES IN THE DRAWINGS OR BETWEEN THE DRAWINGS AND ACTUAL FIELD CONDITION SHALL BE REPORTED TO THE ARCHITECT. REVISED DRAWINGS OR INSTRUCTIONS SHALL BE ISSUED BY THE OWNER PRIOR TO THE INSTALLATION OF ANY WORK.

18. NO CHANGES ARE TO BE MADE ON THESE PLANS WITHOUT THE KNOWLEDGE OR CONSENT OF THE ARCHITECT/ENGINEER WHOSE SIGNATURE APPEARS HEREON.

19. LOCATIONS OF ALL UTILITIES SHOWN ARE APPROXIMATE AND CONTRACTOR SHALL EXERCISE EXTREME CAUTION IN EXCAVATING AND TRENCHING ON THIS SITE TO AVOID INTERCEPTING EXISTING PIPING OR CONDUITS. IT SHALL BE THE RESPONSIBILITY OF THE CONTRACTOR TO LOCATE ALL EXISTING UTILITIES WHETHER SHOWN HEREON OR NOT AND TO PROTECT THEM FROM DAMAGE. THE ARCHITECT IS NOT RESPONSIBLE FOR THE LOCATION OF UNDERGROUND UTILITIES OR STRUCTURES WHETHER OR NOT SHOWN OR DETAILED AND INSTALLED BY ANY OTHER CONTRACT. THE CONTRACTOR SHALL IMMEDIATELY NOTIFY THE ARCHITECT SHOULD ANY UNIDENTIFIED CONDITIONS BE DISCOVERED. THE CONTRACTOR SHALL BEAR ALL EXPENSE OF REPAIR OR REPLACEMENT OF UTILITIES OR OTHER PROPERTY DAMAGED BY OPERATIONS IN CONJUNCTION WITH THE PROSECUTION OF THIS WORK.

FIRE SAFETY

1. FIRE SAFETY DURING CONSTRUCTION AND THE DURATION OF THIS CONTRACT:
   - A. GENERAL: FIRE SAFETY DURING CONSTRUCTION SHALL COMPLY WITH 2019 CALIFORNIA FIRE CODE TITLE 24, PART 9, CHAPTER 33.
   - B. ACCESS ROADS: FIRE DEPARTMENT ACCESS ROADS SHALL BE ESTABLISHED AND MAINTAINED IN ACCORDANCE WITH SECTION 1410.
   - C. WATER SUPPLY: WATER MAINS AND HYDRANTS SHALL BE OPERATIONAL IN ACCORDANCE WITH SECTION 1412.
   - D. BUILDING ACCESS: ACCESS TO BUILDINGS FOR THE PURPOSE OF FIREFIGHTING SHALL BE PROVIDED. CONSTRUCTION MATERIAL SHALL NOT BLOCK ACCESS TO BUILDINGS, HYDRANTS OR FIRE APPLIANCES.
   - E. FIRE WATCH: MAINTAIN FIRE WATCH WHEN REQUIRED BY THE BUILDING OFFICIAL AND/OR WHEN EXISTING FIRE PROTECTION SYSTEMS ARE SHUT DOWN FOR ALTERATIONS. FIRE WATCH SHALL REMAIN IN EFFECT UNTIL EXISTING FIRE PROTECTION SYSTEMS ARE RETURNED TO SERVICE OR AS ALLOWED BY THE BUILDING OFFICIAL.

2. CONTRACTOR REQUIRED TO COMPLY WITH CURRENT CODE AND CITY STANDARDS.

3. CONTRACTOR IS RESPONSIBLE FOR FIRE SAFETY DURING CONSTRUCTION AND THE DURATION OF THIS CONTRACT PER 2019 CALIFORNIA FIRE CODE, CHAPTER 33.

PLAN CHECK NOTES

1. THE CITY OF GARDENA BUILDING DEVISION ENFORCES THE CALIFORNIA BUILDING CODE (CBC) TITLE 24 CHAPTER 11B FOR DISABLED ACCESS COMPLIANCE AND DOES NOT REVIEW OR APPROVE PLANS FOR COMPLIANCE WITH THE AMERICANS WITH DISABILITIES ACT (ADA).

ARCHITECTURAL

GEN-1	PROJECT INFORMATION & SHEET INDEX
GEN-2	CODE ANALYSIS & EXITING PLAN
GEN-3	GENERAL NOTES
GEN-4	PROJECT SIGNAGE
GEN-5	ACCESSIBILITY DETAILS
A1.0	SITE PLAN
A1.1	FIRE MASTER PLAN
A11.1	SLAB PLAN
A11.2	FIRST FLOOR PLAN
A11.3	SECOND FLOOR PLAN
A11.4	ROOF PLAN
A11.5	FIRST FLOOR RCP
A11.6	SECOND FLOOR RCP
A21.1	ELEVATIONS
A31.1	BUILDING SECTIONS
A32.1	WALL SECTIONS
A32.2	WALL SECTIONS
A32.3	WALL SECTIONS
A34.1	ASSEMBLIES
A34.2	ASSEMBLIES
A40.1	POOL BUILDING PLANS, ELEVATIONS, AND SECTIONS
A40.2	POOL BUILDING DETAILS
A42.1	ENLARGED LOCKER ROOM PLANS AND ELEVATIONS
A42.2	ENLARGED PLANS AND ELEVATIONS
A43.1	INTERIOR ELEVATIONS
A44.1	INTERIOR STAIR PLANS AND SECTIONS
A44.2	EXTERIOR STAIR PLANS AND SECTIONS
A44.3	TRELLIS PLANS AND SECTIONS
A50.1	FIRST FLOOR INTERIOR FINISH SCHEDULE
A50.2	SECOND FLOOR INTERIOR FINISH SCHEDULE
A52.1	DOOR SCHEDULE
A52.2	STOREFRONT ELEVATIONS
A61.1	WALL TYPES
A62.1	DETAILS WALL ASSEMBLIES
A62.2	DETAILS CEILING
A62.3	DETAILS CEILING
A62.4	DETAILS ROOF
A62.5	DETAILS ROOF
A63.1	DETAILS DOOR
A63.2	WINDOW AND WALL ASSEMBLY DETAILS
A64.1	STAIR AND RAILING DETAILS
A64.2	TRELLIS, FENCE AND MISC. DETAILS
A65.1	MISCELLANEOUS DETAILS
A67.1	DETAILS CASEWORK & MISC.
A67.2	TILE DETAILS

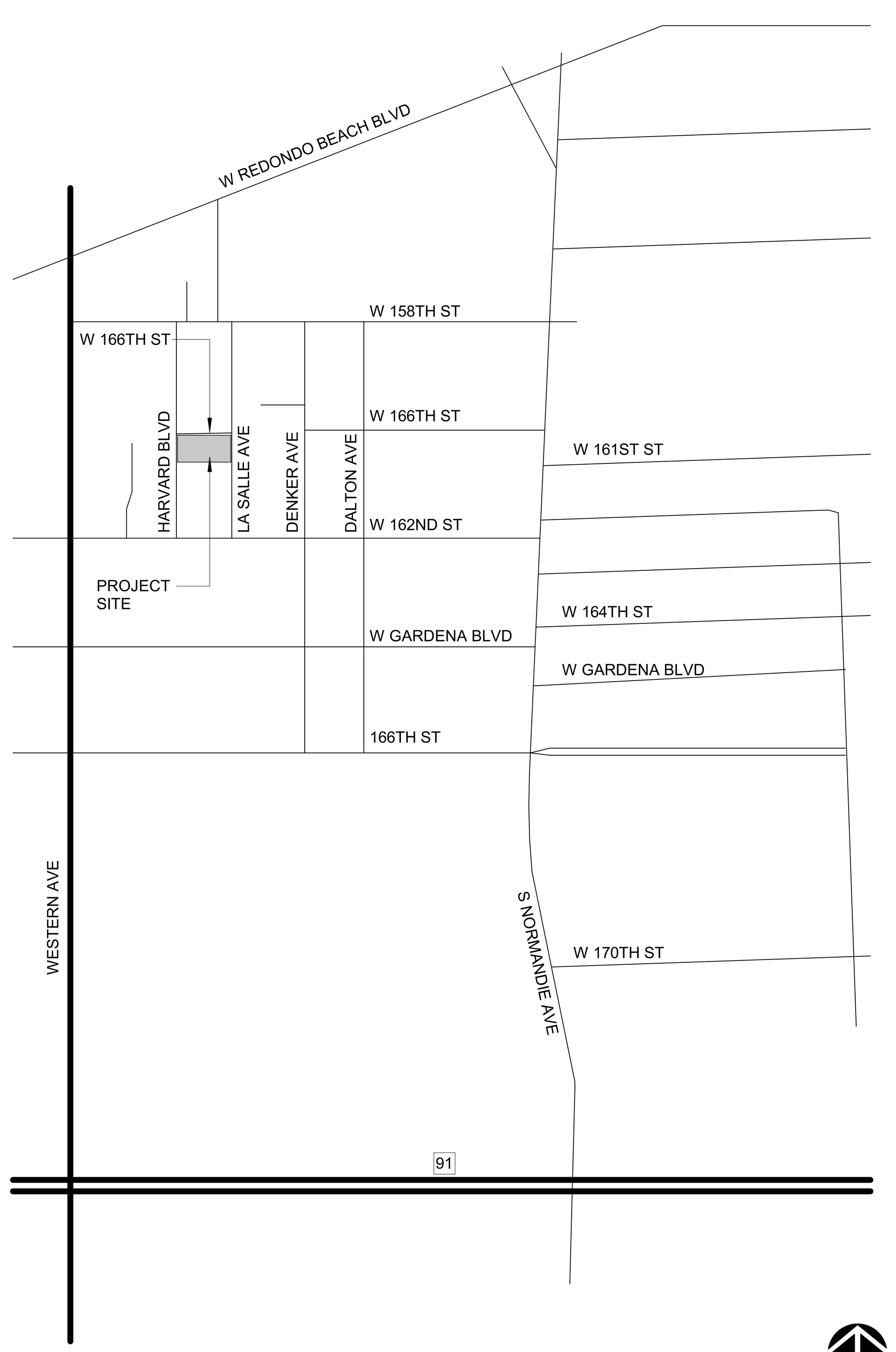

VICINITY MAP

THIS PROJECT SHALL COMPLY WITH ALL FEDERAL, STATE AND LOCAL CODES INCLUDING, BUT NOT LIMITED TO, THE FOLLOWING:

FEDERAL:
AMERICANS WITH DISABILITIES ACT (ADA)

ACCESSIBILITY GUIDELINES FOR BUILDINGS AND FACILITIES (ADAAG)

STATE OF CALIFORNIA PARTIAL LIST OF APPLICABLE CODES AS OF JAN 1, 2020

2019 BUILDING STANDARDS ADMINISTRATIVE CODE
CALIFORNIA CODE OF REGULATIONS (CCR) PART 1, TITLE 24 C.C.R.

2019 CALIFORNIA BUILDING CODE (CBC)
CALIFORNIA CODE OF REGULATIONS (CCR) TITLE 24, PART 2
(2018 INTERNATIONAL BUILDING CODE WITH THE INTERNATIONAL CODE COUNCIL WITH CALIFORNIA AMENDMENTS)

2019 CALIFORNIA ELECTRICAL CODE (CEC)
CALIFORNIA CODE OF REGULATIONS (CCR) TITLE 24, PART 3
(2018 NATIONAL ELECTRICAL CODE OF THE NATIONAL FIRE PROTECTION ASSOCIATION, NFPA)

2019 CALIFORNIA MECHANICAL CODE
CALIFORNIA CODE OF REGULATIONS (CCR) TITLE 24, PART 4
(2018 UNIFORM MECHANICAL CODE OF THE INTERNATIONAL ASSOCIATION OF PLUMBING AND MECHANICAL OFFICIALS, IAPMO)

2019 CALIFORNIA PLUMBING CODE
CALIFORNIA CODE OF REGULATIONS (CCR) TITLE 24, PART 5
(2018 UNIFORM PLUMBING CODE OF THE INTERNATIONAL ASSOCIATION OF THE PLUMBING AND MECHANICAL OFFICIALS, IAPMO)

2019 CALIFORNIA ENERGY CODE
CALIFORNIA CODE OF REGULATIONS (CCR) TITLE 24, PART 6

2019 CALIFORNIA FIRE CODE
CALIFORNIA CODE OF REGULATIONS (CCR) TITLE 24, PART 9
(2018 INTERNATIONAL FIRE CODE OF THE INTERNATIONAL CODE COUNCIL)

2019 CALIFORNIA GREEN BUILDING STANDARDS CODE (CAL GREEN CODE)
CALIFORNIA CODE OF REGULATIONS (CCR) TITLE 24, PART 11

2019 CALIFORNIA REFERENCED STANDARDS CODE
CALIFORNIA CODE OF REGULATIONS (CCR) TITLE 24, PART 12

PUBLIC SAFETY, STATE FIRE MARSHAL REGULATIONS
CALIFORNIA CODE OF REGULATIONS (CCR) TITLE 19

PARTIAL LIST OF APPLICABLE STANDARDS:

2019 BUILDING CODE (FOR SFM) REFERENCED STANDARDS CHAPTER 35

NFPA 13	AUTOMATIC SPRINKLER SYSTEM	2016 EDITION
NFPA 17	DRY CHEMICAL EXTINGUISHING SYSTEMS	2016 EDITION
NFPA 17A	WET CHEMICAL SYSTEMS	2016 EDITION
NFPA 72	NATIONAL FIRE ALARM CODE	2016 EDITION
NFPA 80	FIRE DOORS AND OTHER OPENING PROTECTIVES	2016 EDITION
NFPA 2001	CLEAN AGENT FIRE EXTINGUISHING SYSTEMS	2018 EDITION
UL 464	AUDIBLE SIGNAL APPLIANCES	2016 EDITION
UL 521	HEAT DETECTORS FOR FIRE PROTECTION SIGNAL SYSTEMS	1999 EDITION

APPLICABLE CODES

THE FOLLOWING ITEMS ARE DESIGN-BUILD SYSTEMS AND WILL BE A DEFERRED SUBMITTAL BY THE CONTRACTOR AT A LATER DATE. THE CONTRACTOR SHALL BE RESPONSIBLE FOR ENGINEERING AND CALCULATIONS FOR APPLICABLE ITEMS. THE CONTRACTOR SHALL RETAIN THE SERVICES OF A CIVIL OR STRUCTURAL ENGINEER WHO SHALL BE RESPONSIBLE FOR THE DESIGN. THE CONTRACTOR SHALL SUBMIT CALCULATIONS AND SHOP DRAWINGS TO THE ARCHITECT OF RECORD, WHO SHALL REVIEW THEM WITH NOTATION INDICATING THAT THE DEFERRED SUBMITTAL DOCUMENTS HAVE BEEN FOUND TO BE IN GENERAL CONFORMANCE WITH THE DESIGN OF THE BUILDING. THE SUBMITTAL ITEMS SHALL NOT BE INSTALLED UNTIL THEIR DESIGN AND SUBMITTAL DOCUMENTS HAVE BEEN APPROVED BY THE GOVERNING AGENCY. THE CONTRACTOR IS RESPONSIBLE FOR SUBMITTAL OF THE DEFERRED SUBMITTAL DOCUMENTS.

1. ELEVATOR GUIDE RAILS AND SUPPORT BRACKETS AS DESCRIBED ON PLANS AND IN SPECIFICATIONS.
2. FIRE SPRINKLER SYSTEM AS DESCRIBED ON PLANS AND IN SPECIFICATIONS
3. FIRE ALARM SYSTEM AS DESCRIBED ON PLANS AND IN SPECIFICATIONS
4. ROOF ACCESS LADDERS AS DESCRIBED ON PLANS AND IN SPECIFICATIONS
5. SEISMIC BRACING OF PLUMBING PIPE AS DESCRIBED ON PLANS AND IN SPECIFICATIONS
6. SHORING PLANS AS DESCRIBED ON PLANS AND IN SPECIFICATIONS
7. BLEACHERS AS DESCRIBED ON PLANS AND IN SPECIFICATIONS

NOTE: INSTALLATION OF DEFERRED SUBMITTAL ITEMS SHALL NOT BE STARTED UNTIL DETAILS, PLANS, AND SPECIFICATIONS ARE APPROVED BY THE OWNER AND BUILDING DEPARTMENT. ALLOW 30 DAYS FOR OWNER REVIEW. THE PLANS AND SPECIFICATIONS SHALL FIRST BE REVIEWED AND SIGNED BY THE LANDSCAPE ARCHITECT BEFORE SUBMITTAL TO THE OWNER FOR REVIEW. CONTRACTOR TO SCHEDULE DEFERRED APPROVAL SUBMITTALS WELL IN ADVANCE TO ALLO FOR BOTH ARCHITECT AND OWNER REVIEW.

DEFERRED SUBMITTALS

GENERAL NOTES

SHEET INDEX

CITY OF GARDENA – INCORPORATED 1930 – FREEWAY CITY

PREPARED BY:

SVA ARCHITECTS
6 HUTTON CENTRE DR, SUITE 1150
SANTA ANA, CA 92707
T 949.809.3380 WWW.SVA-ARCHITECTS.COM

THIS DOCUMENT CONTAINS INFORMATION PROPRIETARY TO SVA ARCHITECTS INC. AND IS FURNISHED IN CONFIDENCE FOR THE LIMITED PURPOSE OF EVALUATION, BIDDING OR REVIEW. THIS DOCUMENT OR ITS CONTENTS MAY NOT BE USED FOR ANY OTHER PURPOSE AND MAY NOT BE REPRODUCED OR DISCLOSED TO OTHERS WITHOUT THE PRIOR WRITTEN CONSENT OF SVA ARCHITECTS INC. ALL RIGHTS RESERVED, © COPYRIGHT 2018.

LICENSED ARCHITECT – ROBERT M. SIMONS – No. C-18301 – JAN. 31, 2025 – STATE OF CALIFORNIA

REVISIONS

NO.	DESCRIPTION	DATE	APPROVED
1	90% CD SUBMITTAL	12/15/2022	
2	100% CD SUBMITTAL	05/01/2023	
3	FINAL SUBMITTAL	06/30/2023	

B.M.: THE CITY OF GARDENA BENCHMARK NO. 5D-15
ELEV. = 43.508'

CITY OF GARDENA
DEPARTMENT OF PUBLIC WORKS - ENGINEERING
PROJECT INFORMATION & SHEET INDEX
COMMUNITY AQUATICS & SENIOR CENTER
GEN-1

	INITIAL	DATE
DESIGNED BY	AP/EC	05/25/2022
DRAWN BY	NC	06/20/23
CHECKED BY	DB	06/29/23

APPROVED BY:
APPROVED BY: DIRECTOR OF PUBLIC WORKS

FILE PATH: C:\Users\dbrown\Documents\Gardena_Community Pool and Senior Center_dbrown@sva-architects.com.rvt
PLOT TIME: 10/12/2023 10:31:35 AM

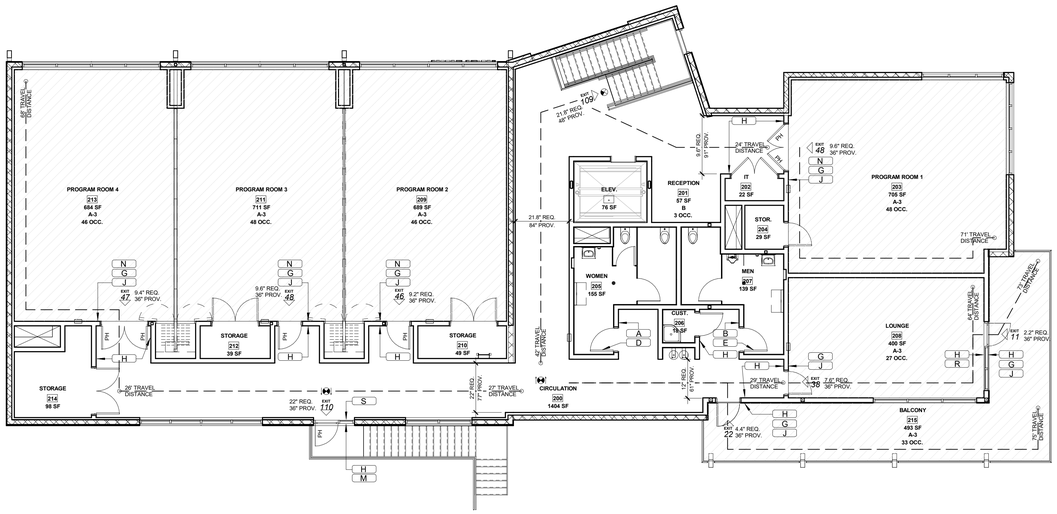

SECOND FLOOR EXITING AND SIGNAGE PLAN | 1/8" = 1'-0" | 3

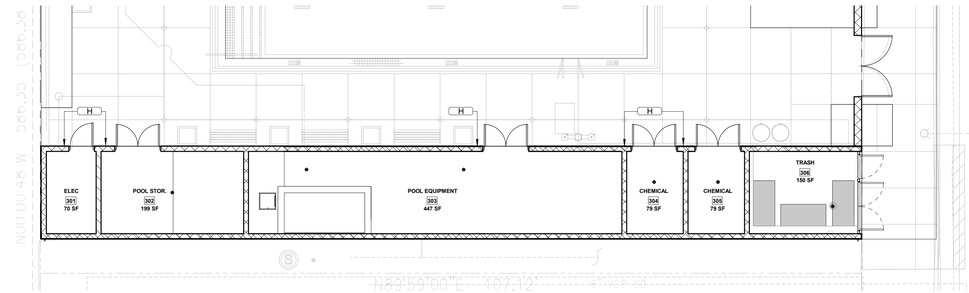

FIRST FLOOR POOL BUILDING EXITING AND SIGNAGE PLAN | 1/8" = 1'-0" | 1

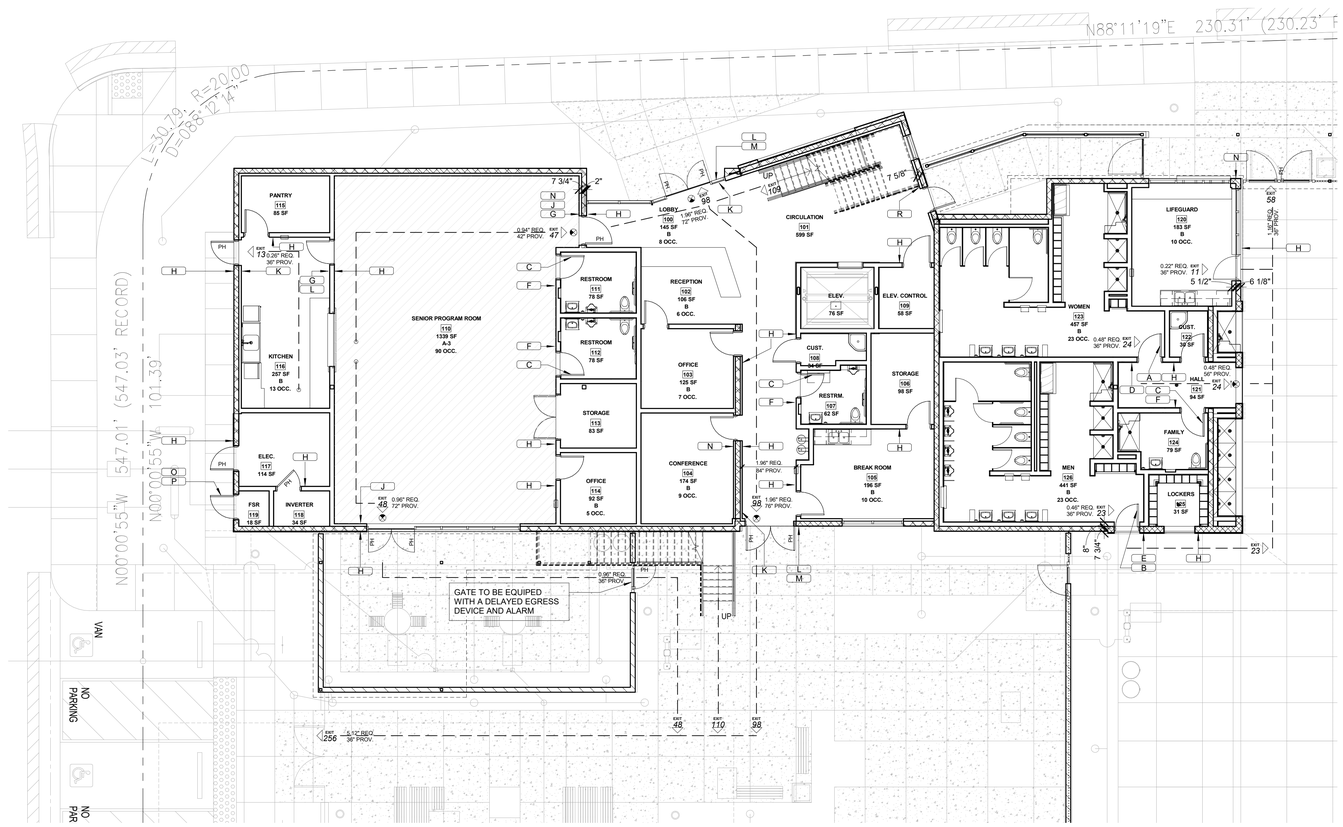

FIRST FLOOR COMMUNITY BUILDING EXITING AND SIGNAGE PLAN | 1/8" = 1'-0" | 2

A-3 OCCUPANCY

B OCCUPANCY

EXIT PATH

CONCRETE MASONRY WALL

METAL STUD FRAMED WALL

EXITING TAG SHOWING NUMBER OF OCCUPANTS & EXIT DIRECTION

NOTE:
EVERY ROOM OR SPACE THAT IS AN ASSEMBLY OCCUPANCY SHALL HAVE THE OCCUPANT LOAD OF THE ROOM OR SPACE POSTED IN A CONSPICUOUS PLACE, NEAR THE MAIN EXIT OR EXIT ACCESS DOORWAY FROM THE ROOM OR SPACE. POSTED SIGNS SHALL BE OF AN APPROVED LEGIBLE PERMANENT DESIGN AND SHALL BE MAINTAINED BY THE OWNER OR AUTHORIZED AGENT. BUILDING CODE 1004.3. FIRE CODE 1004.3

EXITING PLAN LEGEND

PLUMBING FIXTURE REQUIREMENTS CPC SECTION 422

OCCUPANCY TYPE	B
ACTURAL AREA	183SF
LOAD FACTOR CPC TABLE A	200
NO. OF OCCUPANTS	1
FIXTURES PROVIDED	1 UNISEX RESTROOM PROVIDED WITH 1 TOILET, 1 LAV, AND 1 SHOWER

POOL PLUMBING FIXTURE REQUIREMENTS CBC 3116B

POOL AREA	7,020SF	
LOAD FACTOR	15	
NO. OF USERS	468 / 2 = 234 MALE & 234 FEMALE	
FIXTURES PROVIDED	MALE	FEMALE
TOILETS	4	4
URINALS	4	0
LAVATORIES	3	3
SHOWER	5	5
DRINKING FOUNTAINS - 3 TOTAL (CBC 3117B)		

AQUATIC CENTER PLUMBING FIXTURE REQUIREMENTS

FIRST FLOOR PLUMBING FIXTURE REQUIREMENTS CPC SECTION 422

OCCUPANCY TYPE	A-3 (PROG.RM/LOUNGE/BAL.)	B (KITCHEN/OFFICE/RECEPTION)
ACTUAL AREA	5,021SF	637SF
LOAD FACTOR CPC TABLE A	30	200
NO. OF OCCUPANTS	168	4

TOTAL NO. OF OCCUPANTS: 172 / 2 = 86 MALE & 86 FEMALE

REQUIRED NO. FIXTURES PER T422.1 (A-3 USED AS MOST RESTRICTIVE)

	MALE	FEMALE
TOILETS	1	3
URINALS	1	0
LAVATORIES	1	1
DRINKING FOUNTAINS - 1 TOTAL		
SERVICE SINKS - 1 TOTAL		

PROVIDED NO. FIXTURES PER T422.1 (A-3 USED AS MOST RESTRICTIVE)

	MALE	FEMALE	UNISEX	TOTAL
TOILETS	1	2	3	6
URINALS	1	0	1	1
LAVATORIES	1	1	3	5
DRINKING FOUNTAINS - 2 TOTAL; 1 PER FLOOR				
SERVICE SINKS - 2 TOTAL; 1 PER FLOOR				

SENIOR CENTER PLUMBING FIXTURE REQUIREMENTS

NO.	DESCRIPTION	SHEET
A	RESTROOM DOOR SIGNAGE - WOMEN	2 / GEN-4
B	RESTROOM DOOR SIGNAGE - MEN	3 / GEN-4
C	RESTROOM DOOR SIGNAGE - ALL GENDER	4 / GEN-4
D	RESTROOM SIGN - WOMEN	6 / GEN-4
E	RESTROOM SIGN - MEN	7 / GEN-4
F	RESTROOM SIGN - ALL GENDER	8 / GEN-4
G	OCCUPANT LOAD SIGN *	17 / GEN-4
H	TACTILE ROOM IDENTIFICATION SIGN	9 / GEN-4
J	TACTILE EXIT ROUTE SIGN	12 / GEN-4
K	TACTILE EXIT SIGN	13 / GEN-4
L	ACCESSIBLE ENTRY SIGN	16 / GEN-4
M	NO SMOKING SIGN	22 / GEN-4
N	ASSISTIVE LISTENING SIGN	15 / GEN-4
O	FIRE SPRINKLER RISER ROOM SIGN	19 / GEN-4
P	FIRE ALARM SIGN	21 / GEN-4
R	TACTILE NOT AN EXIT SIGN	11 / GEN-4
S	TACTILE EXIT STAIR DOWN SIGN	10 / GEN-4

NOTE:

* FOR CLASSROOM #2, 3, & 4:
THE MAX. OCCUPANT LOAD SIGN SHOULD LIST LOADS FOR BOTH CONDITIONS, WHEN PARTITION IS OPEN AND WHEN IT IS CLOSED.

SIGNAGE LEGEND

	SENIOR CENTER	POOL BUILDING
OCCUPANCY TYPES:	**B, A-3**	**S-1**
BUILDING HEIGHT:	**+/- 32'-7"**	**+/- 11'-9"**
NUMBER OF STORIES:	**2**	**1**
BUILDING AREA:	**11,916SF** FIRST FLOOR = 6,111SF SECOND FLOOR = 5,805SF B = 6,507SF A-3 = 5,409SF	**1,284SF**
CONSTRUCTION TYPE:	**III-B**	**V-B**
FIRE SPRINKLERS:	**NFPA 13**	**NONE**
	PROPOSED AS NON-SEPARATED MIXED-OCCUPANCY BUILDING (A-3 MOST RESTRICTIVE)	
ALLOWABLE BUILDING HEIGHT: (CBC T504.3)	**55'** (W/ AREA INCREASE)	**40'**
ALLOWABLE NUMBER OF STORIES: (CBC T504.4)	**2** (W/ AREA INCREASE)	**1**
ALLOWABLE BUILDING AREA: (CBC T506.2)	**28,500SF** (W/O HEIGHT INCREASE)	**9,000SF** (CBC TABLE 506.2)
OCCUPANCY SEPARATION	NON-SEPARATED OCCUPANCIES PER CBC 508.3	NONE, SINGLE OCCUPANCY BUILDING
FIRE-RESISTANCE RATING REQUIREMENTS (CBC T601)		
STRUCTURAL FRAME	0	0
BEARING WALLS - EXTERIOR	2	0
BEARING WALLS - INTERIOR	0	0
NON BEARING WALLS & PARTITIONS - EXTERIOR	SEE TABLE 602	SEE TABLE 602
NON BEARING WALLS & PARTITIONS - INTERIOR	0	0
FLOOR CONSTRUCTION	0	0
ROOF CONSTRUCTION	0	0
NON BEARING WALLS AND PARTITIONS - EXTERIOR (CBC T602)		
FIRE SEPARATION DISTANCE = X(FEET)		
10 ≤ X < 30	N/A (ALL WALLS +30' FSD)	0
X ≥ 30	0	0

CODE ANALYSIS

CITY OF GARDENA
INCORPORATED 1930

PREPARED BY:
SVA ARCHITECTS
6 HUTTON CENTRE DR., SUITE 1150
SANTA ANA, CA 92707
T 949.809.3380 WWW.SVA-ARCHITECTS.COM

THIS DOCUMENT CONTAINS INFORMATION PROPRIETARY TO SVA ARCHITECTS INC. AND IS FURNISHED IN CONFIDENCE FOR THE LIMITED PURPOSE OF EVALUATION, BIDDING OR REVIEW. THIS DOCUMENT OR ITS CONTENTS MAY NOT BE USED FOR ANY OTHER PURPOSE AND MAY NOT BE REPRODUCED OR DISCLOSED TO OTHERS WITHOUT THE PRIOR WRITTEN CONSENT OF SVA ARCHITECTS INC. ALL RIGHTS RESERVED, © COPYRIGHT 2018.

LICENSED ARCHITECT
ROBERT M. SIMPSON
No. C-18501
JAN. 31, 2025
STATE OF CALIFORNIA

REVISIONS

NO.	DESCRIPTION	DATE	APPROVED
1	90% CD SUBMITTAL	12/15/2022	
2	100% CD SUBMITTAL	05/01/2023	
3	FINAL SUBMITTAL	06/30/2023	

B.M.: THE CITY OF GARDENA BENCHMARK NO. SD-15
ELEV. = 43.508'

CITY OF GARDENA
DEPARTMENT OF PUBLIC WORKS - ENGINEERING

CODE ANALYSIS & EXITING PLAN

COMMUNITY AQUATICS & SENIOR CENTER

GEN-2

	INITIAL	DATE
DESIGNED BY	AP/EC	05/25/2022
DRAWN BY	NC	06/20/23
CHECKED BY	DB	06/27/23

APPROVED BY:

APPROVED BY: DIRECTOR OF PUBLIC WORKS

SHT. 40 OF 195 DWG. NO. S-2606

CARDENA COMMUNITY AQUATICS AND SENIOR CENTER - CITY SUBMITTAL SET

PLOT DATE: 6/30/2023 9:37:07 AM
PLOT BY: C:\Users\dbrown\Documents\Gardena Community Pool and Senior Center_dbrown@sva-architects.com.rvt

ABBREVIATIONS

A.B.	ANCHOR BOLT (S)
A.C.	ASPHALT CONCRETE PAVING
ACOUS	ACOUSTIC
AC. T.	ACOUSTICAL TILE
AD.	AREA DRAIN
ADJ.	ADJUSTABLE
AGG	AGGREGATE
ALT.	ALTERNATE
ALUM.	ALUMINUM
APPROX.	APPROXIMATE
APT.	APARTMENT
ASPH.	ASPHALT
A.S.T.M.	AMERICAN SOCIETY OF TESTING MATERIALS
@	AT
B.B	BOTTOM OF BEAM
BD.	BOARD
BLK.	BLOCK
BLK'G.	BLOCKING
BM.	BEAM
BOT.	BOTTOM
BDRM.	BEDROOM
BR.	BROOM
CAB.	CABINET
CPT.	CARPET
C.B.	CATCH BASIN
CEM.	CEMENT
CEM. PLAS.	CEMENT PLASTER
C.	CENTER LINE
CER.	CERAMIC
C.I.	CAST IRON
CIRC.	CIRCULAR
CLG.	CEILING
CLR.	CLEAR
C.M.T.	CERAMIC MOSAIC TILE
COMPC.	COMPOSITION
CONC.	CONCRETE
CONT.	CONTINUOUS
CTSK.	COUNTERSUNK
CU. FT.	CUBIC FEET
CU. IN.	CUBIC INCH
CU. YD.	CUBIC YARD
D.	DRYER
D.F.	DOUGLAS FIR
D.F.	DRINKING FOUNTAIN
DIA.	DIAMETER
DIM.	DIMENSION
DN.	DOWN
DR.	DOOR
D.S.	DOWN SPOUT
DSP.	DRY STANDPIPE
DUP.	DUPLICATE
DW.	DISHWASHER
DWGS.	DRAWINGS
E.	EAST
EA.	EACH
E.J.	EXPANSION JOINT
ELEVA.	ELEVATOR
ELEV.	ELEVATION
ENCL.	ENCLOSURE
EQ.	EQUAL
EQUIP.	EQUIPMENT
E.W.W.M.	ELECTRIC WELDED WIRE MESH
EXPN.	EXPANSION
EXP.	EXPOSED
EXT.	EXTERIOR
EXTR.	EXTINGUISHER
FHS	FLAT HEAD SCREW
F.A.U.	FORCED AIR UNIT
F.F.	FINISH FLOOR
F.G.	FIXED GLASS
FHWS	FLAT HEAD WOOD SCREW
FIN.	FINISH
FIXT.	FIXTURE
FLASH.	FLASHING
FLR	FLOOR
FLR'G	FLOORING
FLUOR.	FLUORESCENT
F.O.C.	FACE OF CONCRETE
F.O.M.	FACE OF MASONRY
F.O.S.	FACE OF STUD
F.O.W.	FACE OF WALL
F.P.	FIRE PLACE
F.S.	FINISH SURFACE
FREQ.	FREQUENCY
FT.	FEET, FOOT
FTG.	FOOTING
FXC	FIRE EXTINGUISHER & CABINET
GA.	GAUGE
GALV.	GALVANIZED
G.I.	GALVANIZED IRON (STEEL)
GUN.	FUNITE
GYP.	GYPSUM
GYP. BD.	GYPSUM BOARD
H.B.	HOSE BIBB
H.C.	HOLLOW CORE
HD	DEAD
H.M.	HOWLLOW METAL
HORIZ.	HORIZONTAL
HR.	HOUR
I.	IRON
I.D.	INSIDE DIAMETER
INC.	INCORPORATED
INSUL.	INSULATION
INT	INTERIOR
JT.	JOINT
JST.	JOIST
K.	KITCHEN
LAM.	LAMINATED
LAM. PLAS.	LAMINATED PLASTIC
LAV.	LAVATORY
LT.	LIGHT
LVR.	LOUVER
M.C.	MEDICINE CABINET
MECH.	MECHANICAL
MEMB.	MEMBRANE
MET.	METAL
MFG.	MANUFACTURE
M.H.	MAN HOLE
MIN.	MINIMUM
MIR.	MIRROR
MTG.	MOUNTING
MTL.	METAL
N.	NORTH
NAT.	NATURAL
N.I.C.	NOT IN CONTRACT
NO.	NUMBER
N.T.S.	NOT TO SCALE
O/	OVER
O.C.	ON CENTER
O.D.	OVERFLOW DRAIN
O.H.	OPPOSITE HAND
OPP.	OPPOSITE
O.T.S.	OPEN TO STRUCTURE
OV.	OVEN
OVHD.	OVERHEAD
PB.	PUSHBUTTON
PL	PLATE
P	PROPERTY LINE
PLAS.	PLASTER
PL. GLS.	PLATE GLASS
PLAST.	PLASTER
PLYWD.	PLYWOOD
PNL.	PANEL
PR.	PAIR
PRCST.	PRECAST
PREFAB.	PREFABRICATED
%	PERCENT
QRY.	QUARRY
QTY.	QUANTITY
RAD.	RADIUS
R.	RISER
R.A.G.	RETURN AIR GRILLE
RD.	ROAD
R.D.	ROOF DRAIN
RDWD.	REDWOOD
RECP.	RECEPTABLE
REF.	REFERENCE
REF.	REFRIGERATOR
REG.	REGISTER
REINF.	REINFORCEMENT
REQ'D	REQUIRED
RES. FLR.	RESILIENT FLOORING
RET.	RETAINING
RF.	ROOF
RF'G.	ROOFING
RM.	ROOM
RO.	ROUGH
R.O.	ROUGH OPENING
RUB.	RUBBER
R.B.	RUBBER (RESILIENT) BASE
S.	SOUTH
S.C.	SOLID CORE
S.D.	STORM DRAIN
SHT.	SHEET
SHT'G	SHEATHING
SIM.	SIMILAR
S&P	SHELF AND POLE
SPECS.	SPECIFICATIONS
SPRKL.	SPRINKLER
SQ. IN.	SQUARE INCH
SQ. FT.	SQUARE FOOT
ST.	STEEL
STOR.	STORAGE
STRUCT.	STRUCTURAL
SUSP.	SUSPENDED
SIM.	SIMILAR
S4S	SMOOTH FOUR SIDES
T	TREAD
T&B	TOP AND BOTTOM
T.B.	TOP OF BEAM
T.C.	TOP OF CURB
T.C.	TOP OF CONCRETE
T.G.	TOP OF GRATE
TEL.	TELEPHONE
TEMP.	TEMPERED
T&G	TONGUE AND GROOVE
THK.	THICK
THRESH	THRESHOLD
T.P.	TOP OF PAVING
T.S.	TOP OF SHEATHING
T.W.	TOP OF WALL
TYP.	TYPICAL
UL	UNDERWRITER'S LABEL
ULT.	ULTIMATE
UNFIN.	UNFINISHED
U.R.F.	UNDER ROOF FRAMING
V.A.T.	VINYL ASBESTOS TILE
VENT.	VENTILATOR
VERT.	VERTICAL
VIT.	VITREOUS
VOL.	VOLUME
V.T.	VINYL TILE
W.	WEST
W/	WITH
W.C.	WATER CLOSET
WD.	WOOD
W	WIDE FLANGE (STEEL)
W.G.	WIRE GLASS
W.H.	WATER HEATER
W.I.	WROUGHT IRON
W/O	WITH OUT
WP.	WATERPROOFING
WS.	WEATHERSTRIPPING
W.S.P.	WET STANDPIPE
WT.	WEIGHT
YD.	YARD

ARCHITECTURAL SYMBOLS LEGEND

DETAIL REFERENCE
DETAIL NUMBER — 1
SHEET ON WHICH DETAIL IS SHOWN — A101

BUILDING SECTION REFERENCE
SECTION NUMBER — 1
SHEET ON WHICH SECTION IS SHOWN — A101

INTERIOR ELEVATION REFERENCE
ELEVATION NUMBER — 1
SHEET ON WHICH ELEVATION IS SHOWN — A101

EXTERIOR ELEVATION REFERENCE
SHEET ON WHICH ELEVATION IS SHOWN — A101

DOOR REFERENCE — 101

WINDOW REFERENCE — 1

STOREFRONT REFERENCE — SF1 / 1/ A101

REVISIONS
REVISION NUMBER — 1

WALL TYPES — A1.6

GRIDLINE REFERENCE — 1

MATERIAL REFERENCE — 101

TOILET ROOM ACCESSORY SYMBOL — 1

ACCESSIBILITY NOTES

1. SITE DEVELOPMENT

A. GRADE AND DEVELOP SITE SUCH THAT ALL PRIMARY BUILDING ENTRANCES ARE ACCESSIBLE TO THE PHYSICALLY DISABLED FROM THE PUBLIC WAY AND DISABLED PARKING PROVIDED.

B. ONE ACCESSIBLE ROUTE SHALL CONNECT ACCESSIBLE BUILDINGS, FACILITIES AND SPACES ON THE SAME SITE. WHERE MORE THAN ONE ROUTE IS PROVIDED, ALL ROUTES SHALL BE ACCESSIBLE

C. IF AN ACCESSIBLE ROUTE HAS A CHANGE IN LEVEL GREATER THAN 1/2", THEN A CURB RAMP, RAMP, ELEVATOR, OR PLATFORM LIFT SHALL BE PROVIDED.

D. ALL WALKS, HALLS, CORRIDORS, AISLES, AND OTHER SPACES THAT ARE PART OF AN ACCESSIBLE ROUTE SHALL PROVIDE A MINIMUM CLEAR WIDTH OF 48 INCHES AND A CLEAR HEIGHT OF 80 INCHES.

2. WALKS AND SIDEWALKS

A. WALKS AND SIDEWALKS SUBJECT TO THESE REGULATIONS SHALL HAVE A CONTINUOUS COMMON SURFACE, NOT INTERRUPTED BY STEPS OR BY ABRUPT CHANGES IN LEVEL EXCEEDING 1/2", AND SHALL BE A MINIMUM OF 48 INCHES IN WIDTH.

B. ALL SIDEWALKS SHALL BE STABLE, FIRM AND SLIP RESISTANT.

C. SURFACE CROSS SLOPES SHALL NOT EXCEED 1:48 (CBC 11B-403.3).

D. WALKS, SIDEWALKS AND PEDESTRIAN WAYS SHALL BE FREE OF GRATINGS WHENEVER POSSIBLE GRATINGS LOCATED IN THE SURFACE OF ANY OF THESE AREAS, GRID OPENINGS IN THE GRATING SHALL BE LIMITED TO 1/2" IN THE DIRECTION OF TRAFFIC FLOW.

E. ABRUPT CHANGES IN LEVEL ALONG ANY ACCESSIBLE ROUTE SHALL NOT EXCEED 1/2". WHEN CHANGES DO OCCUR, THEY SHALL BE BEVELED WITH A SLOPE NO GREATER THAN 1:2 EXCEPT THAT LEVELS NOT EXCEEDING 1/4" MAY BE VERTICAL.

F. WHEN CHANGES IN LEVELS GREATER THAN 1/2" ARE NECESSARY THEY SHALL COMPLY WITH THE REQUIREMENTS FOR CURB RAMPS OR RAMPS AS REQUIRED.

G. WALKS SHALL BE PROVIDED WITH A LEVEL AREA NOT LESS THAN 60" SQUARE AT A DOOR OR GATE THAT SWINGS TOWARD THE WALK, AND NOT LESS THAN 48" WIDE BY 44" DEEP AT A DOOR OR GATE THAT SWINGS AWAY FROM THE WALK. SUCH WALKS SHALL EXTEND 24" TO THE SIDE OF THE STRIKE EDGE OF A DOOR OR GATE THAT SWINGS TOWARD THE WALK.

H. WHEN THE SLOPE IN THE DIRECTION OF TRAVEL OF ANY WALK EXCEEDS 5%, IT MUST COMPLY WITH THE PROVISIONS FOR PEDESTRIAN RAMPS (PER CBC 11B-405).

I. ALL WALKS WITH CONTINUOUS GRADIENTS SHALL HAVE LEVEL AREAS AT LEAST 5 FEET IN LENGTH AT INTERVALS NOT EXCEEDING 400 FEET.

3. ENTRANCES AND DOORWAYS

A. PRIMARY ENTRANCES TO BUILDINGS AND FACILITIES SHALL BE MADE ACCESSIBLE TO THE DISABLED.

B. ACCESSIBLE ENTRANCES SHALL BE IDENTIFIED WITH AT LEAST ONE "ISA" SIGN AND WITH ADDITIONAL DIRECTIONAL SIGNS AS REQUIRED VISIBLE FROM APPROACHING PEDESTRIAN WAYS.

C. LATCHING AND LOCKING DOORS THAT ARE HAND ACTIVATED AND ARE IN THE PATH OF TRAVEL, SHALL BE OPERABLE WITH A SINGLE EFFORT BY LEVER TYPE HARDWARE, PANIC BARS, PUSH-PULL ACTIVATING BARS OR OTHER HARDWARE DESIGNED TO PROVIDE PASSAGE WITHOUT REQUIRING THE ABILITY TO GRASP THE OPENING HARDWARE.

D. HAND ACTIVATED DOOR HARDWARE SHALL BE CENTERED BETWEEN 34" AND 44" ABOVE THE FLOOR (CBC 11B-404.2.7).

E. THE FLOOR OR LANDING ON EACH SIDE OF AN ENTRANCE OR PASSAGE DOOR SHALL BE LEVEL AND CLEAR. THE LEVEL AND CLEAR AREA SHALL BE A MINIMUM 60" SQUARE IN THE DIRECTION OF THE DOOR SWING AND A MINIMUM 44" SQUARE OPPOSITE THE DIRECTION OF DOOR SWING (48" IF THE DOOR HAS BOTH LATCH AND CLOSER). THE SQUARES SHALL BE MEASURED AT RIGHT ANGLES TO THE PLANE OF THE DOOR IN ITS CLOSED POSITION. SEE NOTE I BELOW FOR STRIKE SIDE REQUIREMENTS.

F. THE WIDTH OF THE LEVEL AND CLEAR AREA ON THE SIDE TO WHICH THE DOOR SWINGS SHALL EXTEND 24" PAST THE STRIKE EDGE OF THE DOOR FOR EXTERIOR DOORS AND 18" PAST THE STRIKE EDGE FOR INTERIOR DOORS AND THE PRIMARY ENTRANCE TO THE DWELLING UNIT.

G. THE FLOOR OR LANDING SHALL BE NOT MORE THAN 1/2" LOWER THAN THE THRESHOLD OF THE DOORWAY. CHANGE IN LEVEL BETWEEN 1/4" AND 1/2" SHALL BE BEVELED NO GREATER THAN 1:2.

H. THE BOTTOM 10 INCHES OF ALL DOORS EXCEPT SLIDING AND POCKET DOORS SHALL HAVE A SMOOTH UNINTERRUPTED SURFACE TO ALLOW THE DOOR TO BE OPENED BY A WHEELCHAIR FOOTREST WITHOUT CREATING A TRAP OR HAZARDOUS CONDITION.

I. MAXIMUM EFFORT TO OPERATE DOORS SHALL NOT EXCEED 5 LBS FOR EXTERIOR DOORS AND 5 LBS FOR INTERIOR DOORS. SUCH PULL OR PUSH EFFORT SHALL BE APPLIED AT RIGHT ANGLES TO HINGED DOORS AND AT THE CENTER PLANE OF SLIDING OR FOLDING DOORS. COMPENSATING DEVICES OR AUTOMATIC DOOR OPERATORS MAY BE UTILIZED TO MEET THE ABOVE STANDARDS. THE AUTHORITY HAVING JURISDICTION MAY INCREASE THE MAXIMUM EFFORT TO OPERATE FIRE DOORS TO ACHIEVE POSITIVE LATCHING, BUT NOT TO EXCEED 15 LBS MAX.

J. EXIT DOORS MUST OPEN FROM THE INSIDE WITHOUT A KEY, OR ANY SPECIAL KNOWLEDGE OR EFFORT. EXIT DOORS FROM BUILDINGS OR ROOMS SERVING 10 OR FEWER OCCUPANTS MAY HAVE A NIGHT LATCH, DEADBOLT OR SECURITY CHAIN, AS LONG AS THE DOORS CAN STILL BE OPENED FROM THE INSIDE WITHOUT A KEY, SPECIAL KNOWLEDGE OR EFFORT. IN ADDITION, THESE DEVICES ARE NOT MOUNTED MORE THAN 48" ABOVE THE FLOOR. MANUALLY OPERATED EDGE BOLTS, SURFACE MOUNTED FLUSH BOLTS AND SURFACE BOLTS ARE PROHIBITED. WHEN EXIT DOORS ARE USED IN PAIRS AND AUTOMATIC FLUSH BOLTS ARE USED, THE DOOR LEAF WITH THE FLUSH BOLT MUST HAVE NO DOORKNOB OR SURFACE MOUNTED HARDWARE. THE UNLATCHING OF ANY LEAF MUST NOT REQUIRE MORE THAN ONE OPERATION.

K. EVERY REQUIRED EXIT MUST BE LARGE ENOUGH TO PERMIT A DOOR AT LEAST 3'-0" WIDE BY 6'-8" HIGH. EXIT DOORS SHALL OPEN AT LEAST 90 DEGREES AND PROVIDE A CLEAR WIDTH OF AT LEAST 32".

L. THRESHOLDS AT ALL EXTERIOR DOORS SHALL BE NO HIGHER THAN 1/2". SUCH THRESHOLDS SHALL BE BEVELED NO GREATER THAN 1:2.

M. THE FLOOR LANDING IMMEDIATELY OUTSIDE THE ENTRY MAY BE SLOPED UP TO 1/8" PER FOOT IN THE DIRECTION AWAY FROM THE PRIMARY ENTRANCE FOR DRAINAGE.

N. THE SPACE BETWEEN TWO CONSECUTIVE DOOR OPENINGS IN A VESTIBULE, SERVING OTHER THAN A REQUIRED EXIT STAIRWAY, MUST HAVE AT LEAST 48" OF CLEAR SPACE FROM ANY DOOR OPENING INTO THE VESTIBULE WHEN THE DOOR IS OPEN 90 DEGREES FROM ITS CLOSED POSITION. DOORS IN SERIES MUST SWING IN THE SAME DIRECTION OR AWAY FROM THE SPACE BETWEEN THE DOORS.

4. STAIRWAYS

A. STAIRWAYS SHALL HAVE HANDRAILS ON EACH SIDE. STAIRWAYS SHALL HAVE INTERMEDIATE HANDRAILS WHERE REQUIRED SUCH THAT ALL PORTIONS OF THE STAIRWAY WIDTH REQUIRED FOR EGRESS CAPACITY ARE WITHIN 30 INCHES OF A HANDRAIL. INTERMEDIATE HANDRAILS SHALL BE SPACED AT EQUAL INTERVALS WITHIN THE WIDTH OF THE STAIRWAY AND BE CONTINUOUS FOR THE ENTIRE LENGTH.

B. HANDRAILS MUST BE 34 TO 38 INCHES ABOVE THE NOSING OF THE TREADS AND MUST EXTEND IN THE DIRECTION OF THE STAIR RUN FOR AT LEAST 12" BEYOND THE TOP NOSING AND 12" PLUS THE TREAD WIDTH BEYOND THE BOTTOM NOSING.

C. ENDS SHALL BE RETURNED OR SHALL TERMINATE IN A NEWEL POST OR SAFETY TERMINAL.

D. HANDRAILS PROJECTING FROM A WALL SHALL HAVE A SPACE OF NOT LESS THAN 1-1/2-INCH BETWEEN THE WALL AND THE HANDRAIL.

E. THE HANDGRIP PORTION OF HANDRAILS SHALL BE NOT LESS THAN 1-1/4-INCHES NOR MORE THAN 1 1/2-INCHES IN CROSS-SECTIONAL DIMENSION OR THE SHAPE SHALL PROVIDE AN EQUIVALENT GRIPPING SURFACE AND SHALL HAVE A SMOOTH SURFACE WITH NO SHARP OR ABRASIVE CORNERS AND ALL EDGES MUST HAVE A MINIMUM 1/8" RADIUS.

F. THE UPPER APPROACH AND THE LOWER TREAD OF EACH INTERIOR STAIR SHALL BE MARKED BY A STRIP OF CLEARLY CONTRASTING COLOR THE FULL WIDTH OF THE TREAD AT LEAST 2-INCHES WIDE PLACED PARALLEL TOAND NOT MORE THAN 1-INCH FROM THE NOSE OF THE STEP OR LANDING TO ALERT THE VISUALLY IMPAIRED. THE STRIP SHALL BE OF A MATERIAL THAT IS AT LEAST AS SLIP RESISTANT AS THE OTHER TREADS OF THE STAIR.

G. WHERE STAIRWAYS OCCUR OUTSIDE A BUILDING, THE UPPER APPROACH AND ALL TREADS SHALL BE MARKED BY A STRIP OF CLEARLY CONTRASTING COLOR AT LEAST 2-INCHES WIDE AND PLACED PARALLEL TO AND NOT MORE THAN 1-INCH FROM THE NOSE OF THE STEP OR LANDING TO ALERT THE VISUALLY IMPAIRED. THE STRIP SHALL BE OF A MATERIAL THAT IS AT LEAST AS SLIP RESISTANT AS THE OTHER TREADS OF THE STAIR. A PAINTED STRIP SHALL BE ACCEPTABLE.

H. ALL TREAD SURFACES SHALL BE SLIP RESISTANT.

I. TREADS SHALL HAVE A SMOOTH, ROUNDED OR CHAMFERED EXPOSED EDGES, AND NO ABRUPT EDGES AT THE NOSING (LOWER FRONT EDGE).

J. NOSING SHALL NOT PROJECT MORE THAN 1-1/4 INCH PAST THE FACE OF THE RISER BELOW.

K. STAIR RISERS SHALL BE SOLID PER CBC 11B-504.

5. SANITARY FACILITIES

A. WHEELCHAIR ACCESSIBLE WATER CLOSET COMPARTMENTS SHALL BE EQUIPPED WITH A DOOR THAT HAS AN AUTOMATIC CLOSING DEVICE, AND SHALL HAVE A CLEAR UNOBSTRUCTED OPENING WIDTH OF 32-INCHES WHEN LOCATED AT THE END AND 34-INCHES WHEN LOCATED AT THE SIDE WITH THE DOOR POSITION AT AN ANGLE OF 90 DEGREES FROM ITS CLOSED POSITION.

B. TOILET FLUSH CONTROLS SHALL BE OPERABLE WITH ONE HAND, AND SHALL NOT REQUIRE TIGHT GRASPING, PINCHING, OR TWISTING OF THE WRIST. CONTROLS FOR FLUSH VALVES SHALL BE MOUNTED ON THE WIDE SIDE OF THE TOILET AREAS, NO MORE THAN 44-INCHES ABOVE THE FLOOR. THE FORCE REQUIRED TO ACTIVATE CONTROLS SHALL BE NO GREATER THAN 5 POUNDS PER FOOT.

C. WHERE URINALS ARE PROVIDED AT LEAST ONE WITH A RIM PROJECTING A MINIMUM OF 14-INCHES FROM THE WALL AND AT A MAXIMUM OF 17-INCHES ABOVE THE FLOOR SHALL BE PROVIDED.

D. URINAL FLUSH CONTROLS SHALL BE OPERABLE WITH ONE HAND, AND SHALL NOT REQUIRE TIGHT GRASPING, PINCHING, OR TWISTING OF THE WRIST AND SHALL BE MOUNTED NO MORE THAN 44" ABOVE THE FLOOR. THE FORCE REQUIRED TO ACTIVATE CONTROLS SHALL BE NO GREATER THAN 5 POUNDS PER FOOT.

E. HOT WATER AND DRAIN PIPES UNDER LAVATORIES SHALL BE INSULATED OR OTHERWISE COVERED.

F. FAUCET CONTROLS AND OPERATING MECHANISMS SHALL BE OPERABLE WITH ONE HAND AND SHALL NOT REQUIRE TIGHT GRASPING, PINCHING OR TWISTING OF THE WRIST. THE FORCE REQUIRED TO ACTIVATE CONTROLS SHALL BE NO GREATER THAN 5 POUNDS PER FOOT. LEVER OPERATED, PUSH TYPE AND ELECTRONICALLY CONTROLLED MECHANISMS ARE EXAMPLES OF ACCEPTABLE DESIGNS. SELF-CLOSING VALVES ARE ALLOWED IF THE FAUCET REMAINS OPEN FOR AT LEAST 10 SECONDS.

G. MIRRORS SHALL BE MOUNTED WITH THE BOTTOM GLASS EDGE NOT MORE THAN 40-INCHES ABOVE THE FLOOR.

H. LOCATE TOWEL, SANITARY NAPKIN, AND WASTE RECEPTACLES WITH ALL OPERABLE PARTS NOT MORE THAN 40-INCHES FROM THE FLOOR.

I. TOILET TISSUE DISPENSERS SHALL BE LOCATED ON THE WALL OR PARTITION WITHIN 7" TO 9" TO CENTERLINE FROM THE FRONT EDGE OF THE TOILET SEAT, MOUTED BELOW THE GRAB BAR, AT A MINIMUM HEIGHT OF 19 INCHES, AND 36 INCHES MAXIMUM TO THE FAR EDGE FROM THE REAR WALL. DISPENSERS SHALL PERMIT CONTINUOUS FLOW AND NOT CONTROL DELIVERY (CBC 11B-604.7).

J. GRAB BARS, TUB AND SHOWER SEATS, FASTENERS AND MOUNTING DEVICES SHALL BE DESIGNED FOR 250 LB. PER CBC 1607A.8.2.

K. GRAB BARS:
1. THE DIAMETER OR WIDTH OF THE GRIPPING SURFACE OF A GRAB BAR SHALL BE 1-1/4" TO 1-1/2" OR THE SHAPE SHALL PROVIDE AN EQUIVALENT GRIPPING SURFACE.
2. IF THE GRAB BARS ARE MOUNTED ADJACENT TO A WALL, THE SPACE BETWEEN THE WALL AND THE GRAB BARS SHALL BE 1-1/2".
3. A GRAB BAR AND ANY WALL OR OTHER SURFACE ADJACENT SHALL BE FREE OF ANY SHARP OR ABRASIVE ELEMENTS.
4. GRAB BARS SHALL NOT ROTATE WITHIN THEIR FITTINGS.
5. EDGES SHALL HAVE A MINIMUM RADIUS OF 1/8".

6. SWITCHES CONTROLS AND ELECTRICAL OUTLETS

A. RECEPTACLE OUTLETS SHALL BE 15" MIN ABOVE THE FINISHED FLOOR TO THE BOTTOM OF THE BOX PER CBC 11B-308.1.2.

B. SWITCHES SHALL BE 48" MAX. ABOVE THE FINISHED FLOOR TO THE TOP OF THE BOX (11B-308.1.1).

C. IF REACH IS OVER AN OBSTRUCTION (FOR EXAMPLE, A BASE CABINET) BETWEEN 20" AND 25" IN DEPTH, THE MAXIMUM HEIGHT IS REDUCED TO 44" FOR FORWARD APPROACH, OR 46" FOR SIDE APPROACH PROVIDED THE OBSTRUCTION IS NO MORE THAN 24" IN DEPTH. THE OBSTRUCTION MAY NOT EXTEND MORE THAN 25" FROM THE WALL BENEATH THE CONTROL.

D. THE CENTER OF FIRE ALARM INITIATING DEVICES (BOXES) SHALL BE LOCATED 48" ABOVE THE LEVEL OF THE FLOOR, WORKING PLATFORM, GROUND SURFACE OR SIDEWALK.

E. IF EMERGENCY WARNING SYSTEMS ARE REQUIRED THEY SHALL ACTIVATE A MEANS OF WARNINGTHE HEARING IMPAIRED. FLASHING VISUAL WARNING SHALL HAVE A FREQUENCY OF NOT MORE THAN 60 FLASHES PER MINUTE.

GENERAL NOTES

1. THESE DOCUMENTS AND THE IDEAS AND DESIGNS INCORPORATED HEREIN, AS AN INSTRUMENT OF PROFESSIONAL SERVICE, ARE THE PROPERTY OF SVA ARCHITECTS, AND ARE NOT TO BE USED, IN WHOLE OR IN PART FOR ANOTHER PROJECT WITHOUT THE WRITTEN AUTHORIZATION OF SVA ARCHITECTS.

2. THE WORK SHOWN ON THESE DRAWINGS AS EXISTING CONDITIONS WAS PREPARED FROM INFORMATION FURNISHED BY THE OWNER, WHILE THIS INFORMATION IS BELIEVED TO BE RELIABLE, SVA ARCHITECTS INC. IS NOT RESPONSIBLE FOR THE ACCURACY OR ADEQUACY OF ANY WORK SHOWN AS EXISTING NOR IS SVA ARCHITECTS INC. RESPONSIBLE FOR ANY ERRORS OR OMISSIONS WHICH MAY HAVE BEEN INCORPORATED INTO THESE DRAWINGS AS A RESULT.

3. EACH BIDDER SHALL POSSESS AT THE TIME OF BID A CLASS B OR THE APPROPRIATE CLASS C CONTRACTOR'S LICENSE PURSUANT TO PUBLIC CONTRACT CODE SECTION 3300 AND BUSINESS AND PROFESSIONS CODE SECTION 7028.15. THE SUCCESSFUL BIDDER MUST MAINTAIN THE LICENSE THROUGHOUT THE DURATION OF THIS CONTRACT.

4. FIRE SAFETY DURING CONSTRUCTION AND THE DURATION OF THIS CONTRACT:

A. GENERAL: FIRE SAFETY DURING CONSTRUCTION SHALL COMPLY WITH 2016 CALIFORNIA FIRE CODE TITLE 24, PART 9, CHAPTER 33.

B. ACCESS ROADS: FIRE DEPARTMENT ACCESS ROADS SHALL BE ESTABLISHED AND MAINTAINED IN ACCORDANCE WITH SECTION 1410.

C. WATER SUPPLY: WATER MAINS AND HYDRANTS SHALL BE OPERATIONAL IN ACCORDANCE WITH SECTION 1412.

D. BUILDING ACCESS: ACCESS TO BUILDINGS FOR THE PURPOSE OF FIREFIGHTING SHALL BE PROVIDED. CONSTRUCTION MATERIAL SHALL NOT BLOCK ACCESS TO BUILDINGS, HYDRANTS OR FIRE APPLIANCES.

E. ALTERATIONS OF BUILDINGS: SHALL COMPLY WITH APPLICABLE PROVISIONS OF SECTIONS 1405, 1411, 1413, AND 1415.

G. FIRE WATCH: MAINTAIN FIRE WATCH WHEN REQUIRED BY THE BUILDING OFFICIAL AND WHEN EXISTING FIRE PROTECTION SYSTEMS ARE SHUT DOWN FOR ALTERATIONS, FIRE WATCH SHALL REMAIN IN EFFECT UNTIL EXISTING FIRE PROTECTION SYSTEMS ARE RETURNED TO SERVICE OR AS ALLOWED BY THE BUILDING OFFICIAL.

5. PENETRATIONS TO FIRE RATED MATERIALS OR ASSEMBLIES SHALL BE RESTORED TO EQUAL RATING. FIRE STOP SYSTEMS AS LISTED BY UNDERWRITERS LABORATORIES SHALL BE INSTALLED PER FIRE RESISTANCE DIRECTORY. FIRE STOP SYSTEMS SHALL BE AS SPECIFIED.

6. STATEMENT (TITLE 24, PART 6): NONRESIDENTIAL ENERGY STANDARDS COMPLIANCE: THE DESIGN INDICATED HEREIN COMPLIES WITH THE REQUIREMENTS OF THE ENERGY CONSERVATION STANDARDS OF TITLE 24, PART 6, CALIFORNIA CODE OF REGULATIONS. THE PROPOSED BUILDING(S) WILL BE IN COMPLIANCE WITH THE ENERGY CONSERVATION STANDARDS PROVIDED IT (THEY) IS (ARE) BUILT ACCORDING TO THESE DRAWINGS AND SPECIFICATIONS AND PROVIDED ANY FUTURE IMPROVEMENTS ARE COMPLETED ACCORDING TO THE REQUIREMENTS OF TITLE 24, PART 6, CALIFORNIA CODE OF REGULATIONS. THESE PLANS AND SPECIFICATIONS HAVE BEEN PREPARED TO INCLUDE ALL SIGNIFICANT ENERGY CONSERVATION FEATURES REQUIRED FOR COMPLIANCE WITH THE STANDARDS. BUILDING AREAS THAT ARE UNCONDITIONED AND/OR NOT SUBJECT TO THE STANDARDS ARE INDICATED ON THE PLANS.

ENVELOPE MANDATORY MEASURES:

A. INSTALLED INSULATING MATERIALS SHALL HAVE BEEN CERTIFIED BY THE MANUFACTURER TO COMPLY WITH THE CALIFORNIA QUALITY STANDARDS FOR INSULATING MATERIAL.

B. ALL INSULATING MATERIALS SHALL BE INSTALLED IN COMPLIANCE WITH THE FLAME SPREAD RATING AND SMOKE DENSITY REQUIREMENTS OF [TITLE 24, PART 2, CALIFORNIA BUILDING CODE, SECTIONS 719 AND 2603.]

C. ALL EXTERIOR JOINTS AND OPENINGS IN THE BUILDING ENVELOPE THAT ARE POTENTIAL AND OBSERVABLE SOURCES OF AIR LEAKAGE SHALL BE CAULKED, GASKETED, WEATHERSTRIPPED OR OTHERWISE SEALED.

D. SITE CONSTRUCTED DOORS, AND WINDOWS SHALL BE CAULKED BETWEEN THE UNIT AND THE BUILDING, AND SHALL BE WEATHERSTRIPPED (EXCEPT FOR UNFRAMED GLASS DOORS AND FIRE DOORS).

E. MANUFACTURED DOORS AND WINDOWS INSTALLED SHALL HAVE AIR INFILTRATION RATES CERTIFIED BY THE MANUFACTURER IN ACCORDANCE WITH TITLE 24, PART 6, CALIFORNIA CODE OF REGULATIONS, SECTION 116(a)1.

F. MANUFACTURED FENESTRATION PRODUCTS IN THE ENVELOPE OF THE BUILDING, INCLUDING, BUT NOT LIMITED TO, WINDOWS, SLIDING GLASS DOORS, FRENCH DOORS, SKYLIGHTS, CURTAIN WALLS, AND GARDEN WINDOWS MUST BE LABELED FOR U-VALUE IN ACCORDANCE WITH THE (NFRC) NATIONAL FENESTRATION RATING COUNCIL'S INTERIM U-VALUE RATING PROCEDURE.

G. DEMISING WALL INSULATION SHALL BE INSTALLED IN ALL OPAQUE PORTIONS OF FRAMED WALLS (EXCEPT DOORS).

7. INSPECTOR OF RECORD REQUIREMENTS: A. ONE OR MORE INSPECTORS EMPLOYED BY THE OWNER IN ACCORDANCE WITH THE REQUIREMENTS OF TITLE 24 OF THE CALIFORNIA CODE OF REGULATIONS WILL BE ASSIGNED TO THE WORK. THE INSPECTORS DUTIES ARE SPECIFICALLY DEFINED IN SECTION 4-342 OF SAID TITLE 24, PART 1 AND IN ADDITION SHALL BE AS STIPULATED IN INTERPRETATION OF REGULATION DOCUMENT IR A-8. B. INSPECTOR SHALL BE CERTIFIED AS A CLASS [2] INSPECTOR THROUGH THE DIVISION OF THE STATE ARCHITECT INSPECTOR EXAMINATION PROGRAM. INSPECTOR SHALL ALSO BE SPECIFICALLY APPROVED BY THE DIVISION OF THE STATE ARCHITECT FOR THIS PROJECT AT LEAST 10 DAYS PRIOR TO THE START OF ANY WORK FOR THIS PROJECT.

8. ALL WORK SHOWN ON THESE DRAWINGS SHALL COMPLY WITH THE REQUIREMENTS OF TITLE 24, CALIFORNIA CODE OF REGULATIONS (CCR).

9. CHANGES TO THE APPROVED DRAWINGS AND SPECIFICATIONS SHALL BE MADE BY AN ADDENDUM OR A CCD APPROVED BY THE DIVISION OF THE STATE ARCHITECT.

10. GRADING PLANS, DRAINAGE IMPRPOVEMENTS, ROAD AND ACCESS REQUIREMENTS AND ENVIROMENTAL HEALTH CONCIDERATIONS SHALL COMPLY WITH ALL LOCAL ORDINANCES.

11. DRINKING WATER SHALL COMPLY WITH ALL LOCAL HEALTH DEPARTMENT REQUIREMENTS.

12. ALL CONSTRUCTION SHALL BE IN ACCORDANCE WITH THE REQUIREMENTS OF THE APPLICABLE CODES. ALL ENGINEERING SHALL COMFORM WITH ALL APPLICABLE MUNICIPAL, STATE AND FEDERAL REGULATIONS HAVING JURISDICTION INCLUDING ACCESSIBILITY STANDARDS AND ADA REQUIREMENTS.

13. DO NOT SCALE THE DRAWINGS. THE DRAWINGS ARE NOT NECESSARILY TO SCALE. THE CONTRACTOR SHALL VERIFY ALL CONDITIONS AND DIMENSIONS IN THE FIELD PRIOR TO BIDDING AND START OF CONSTRUCTION. IF DISCREPANCIES ARE FOUND, THE ARCHITECT SHALL BE NOTIFIED FOR CLARIFICATION BEFORE COMMENCING WOR

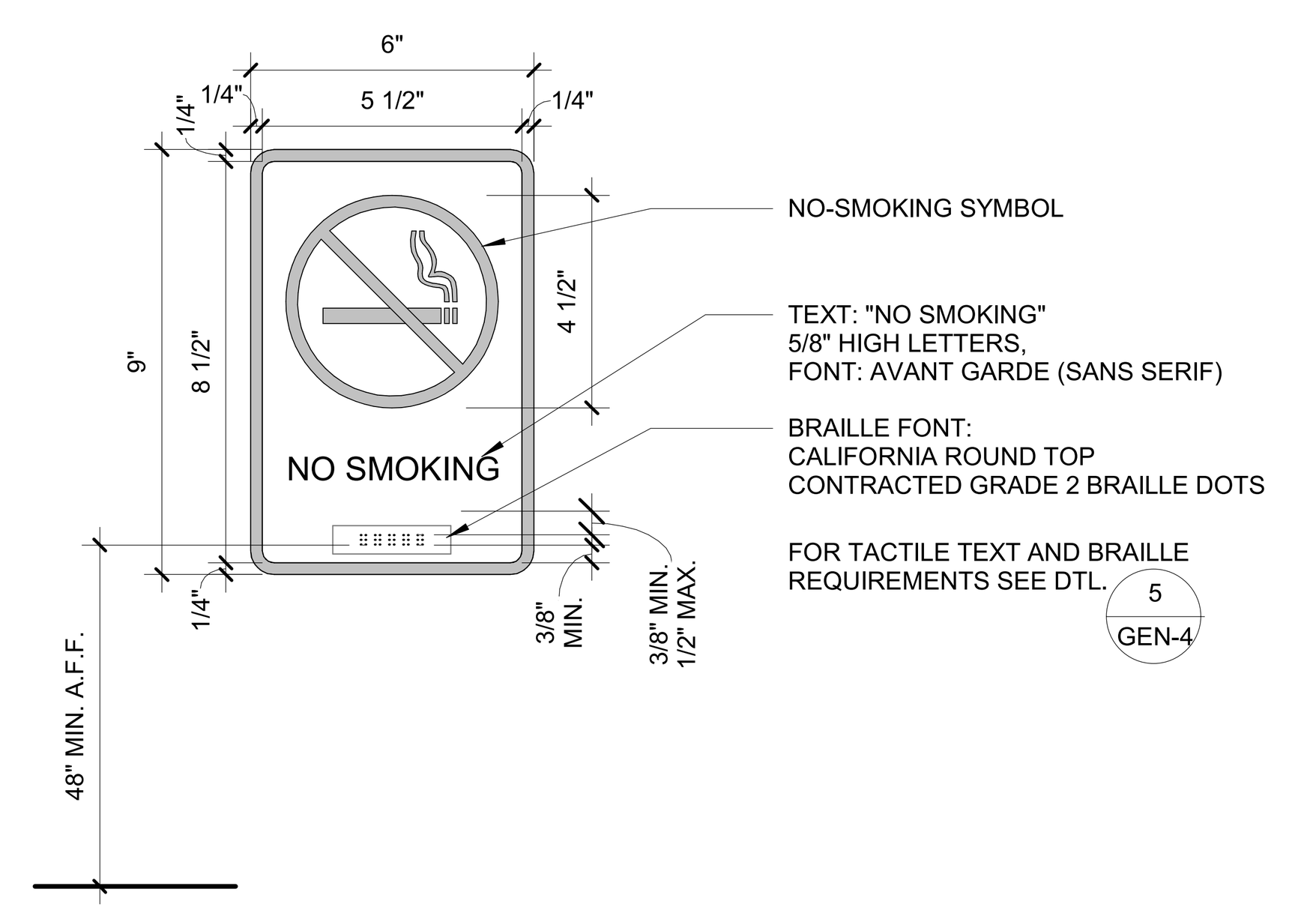

NO SMOKING SIGNAGE | 3" = 1'-0" | 22

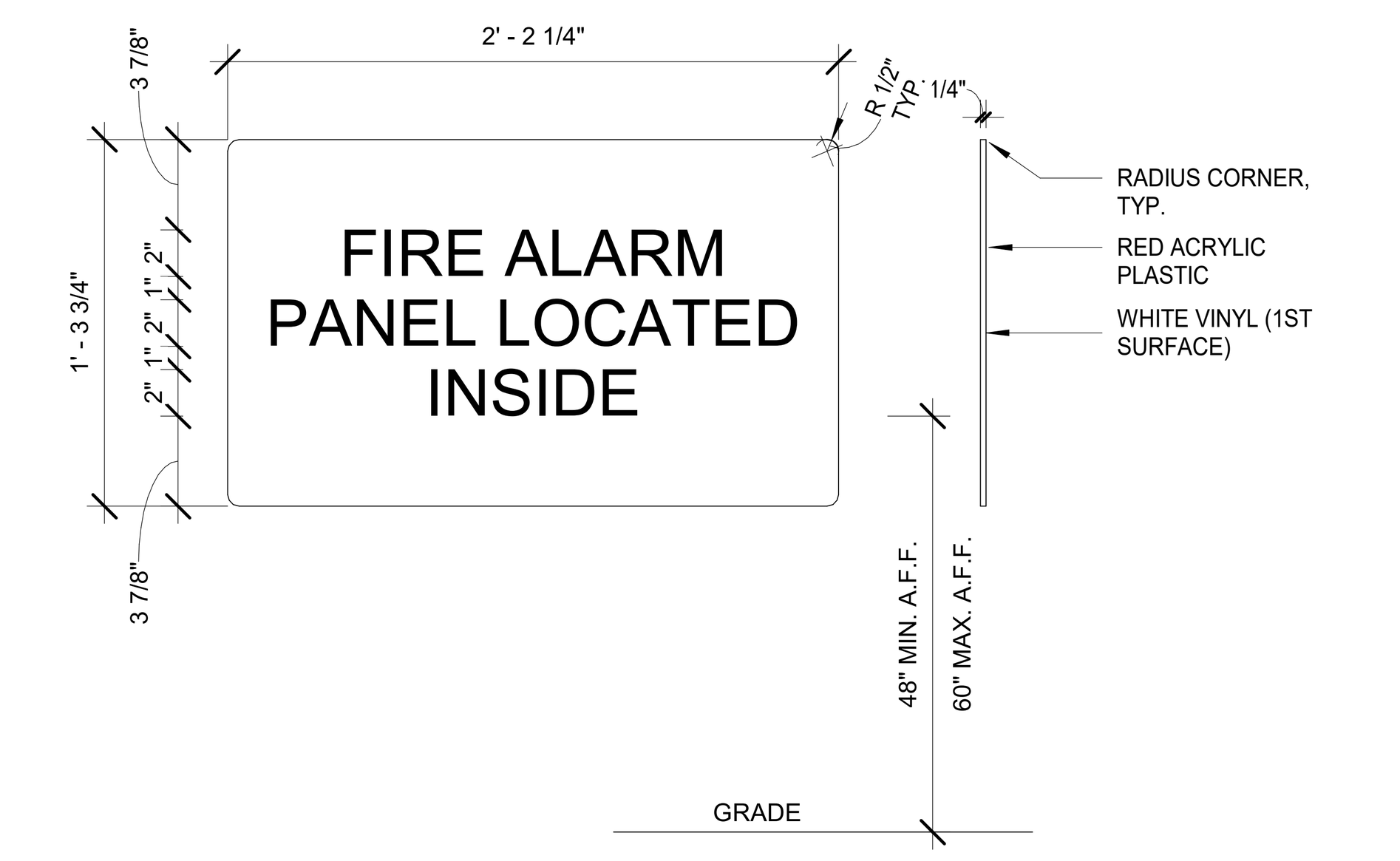

NOTE: BACKGROUND COLOR TO BE RED VINYL LETTERING TO BE WHITE

DOOR SIGNAGE - FAVP | 1 1/2" = 1'-0" | 21

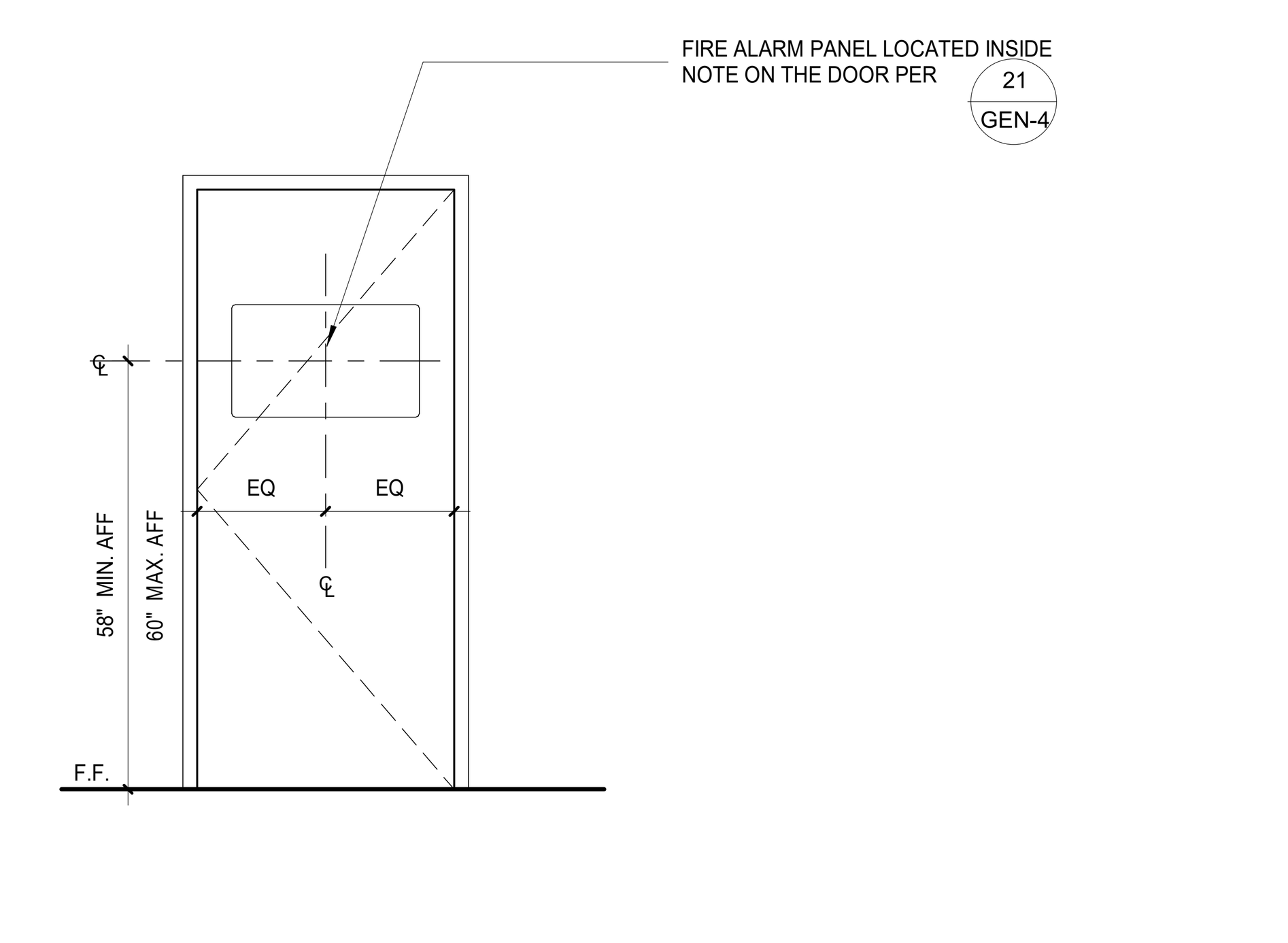

DOOR SIGNAGE - FACP VOICE EVAC | 1/2" = 1'-0" | 20

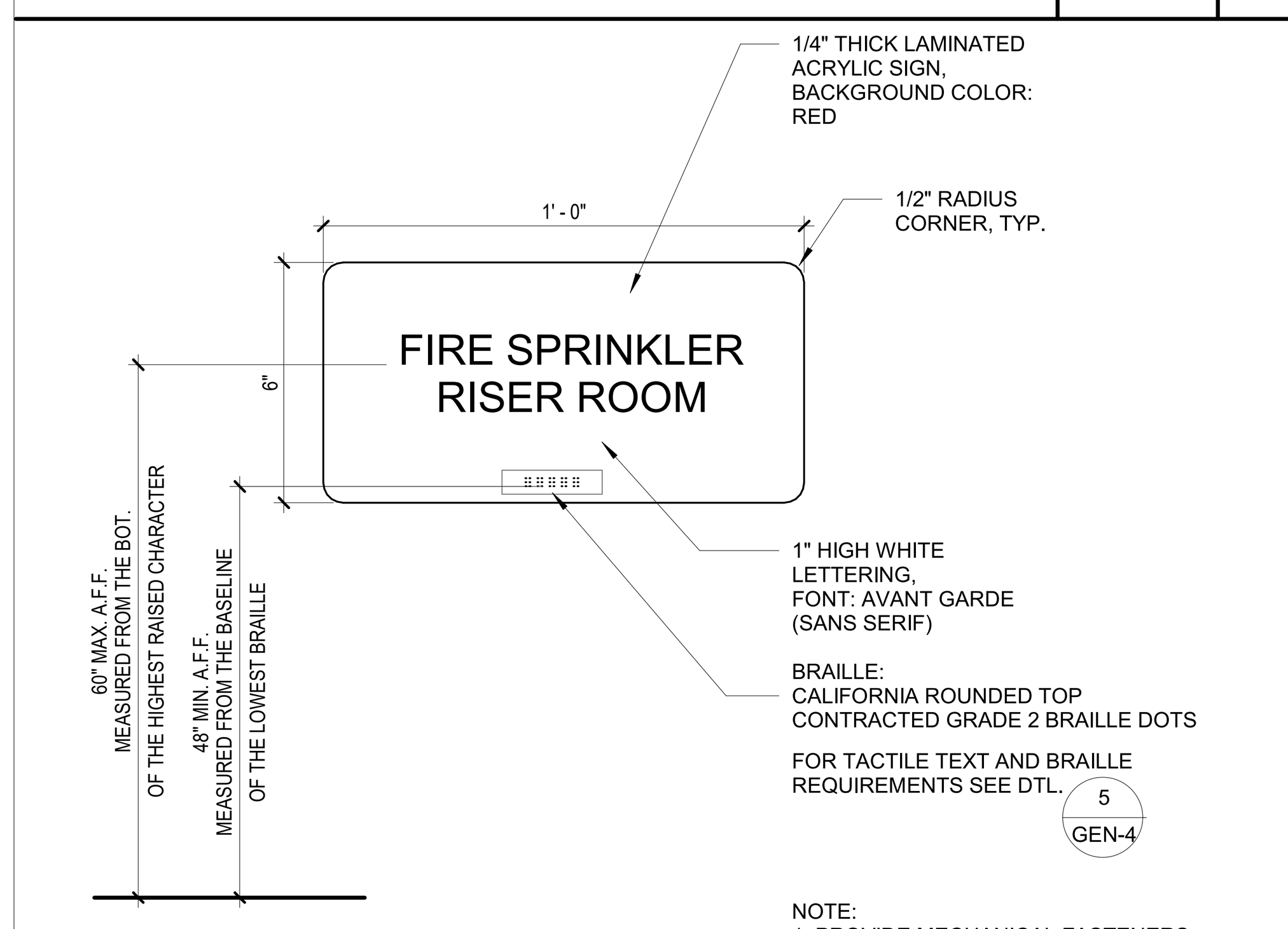

NOTE:
1. PROVIDE MECHANICAL FASTENERS FOR MOUNTING W/VANDAL RESISTANT FASTERNERS.

FIRE RISER ROOM SIGN | 3" = 1'-0" | 19

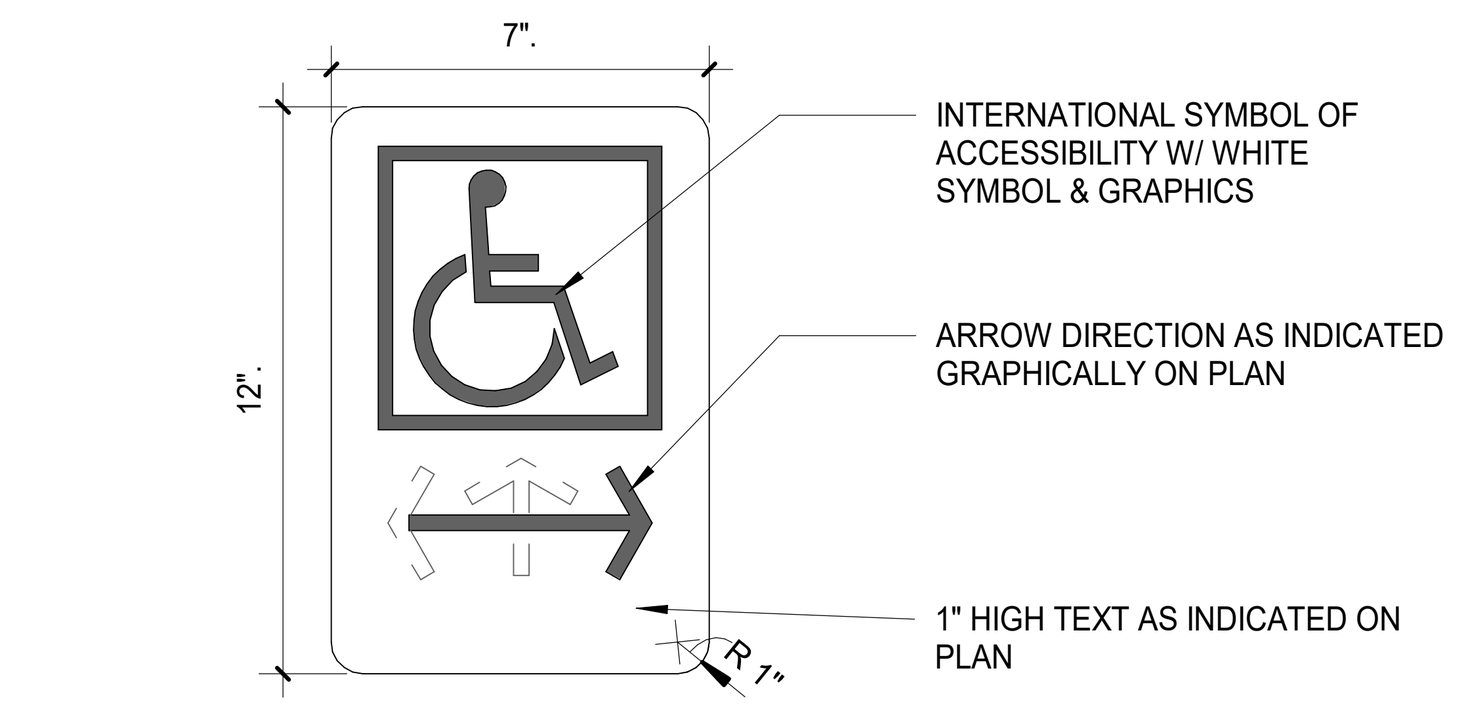

DIRECTIONAL ACCESS SIGN | 1 1/2" = 1'-0" | 18

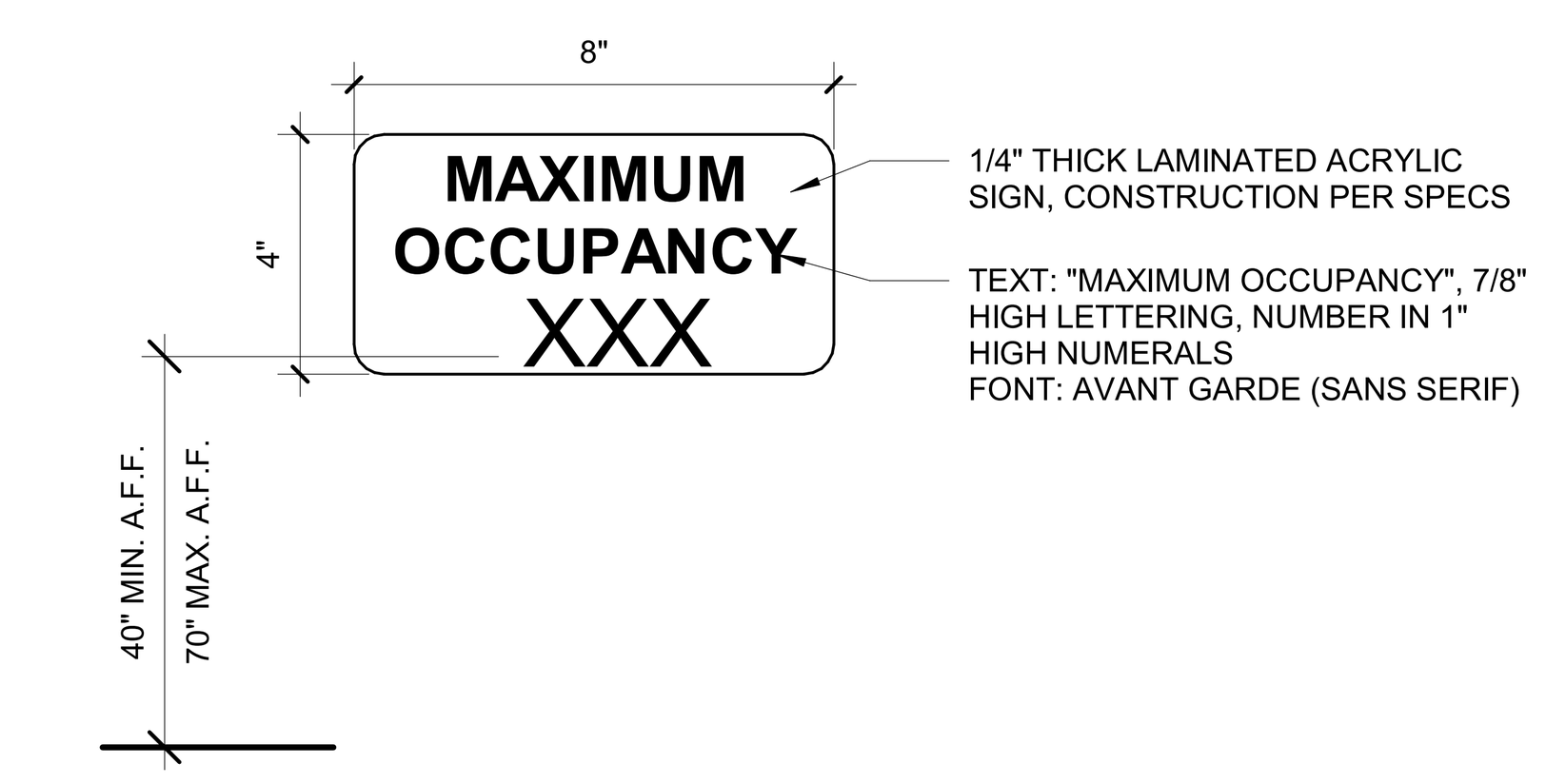

OCCUPANT LOAD SIGN | 3" = 1'-0" | 17

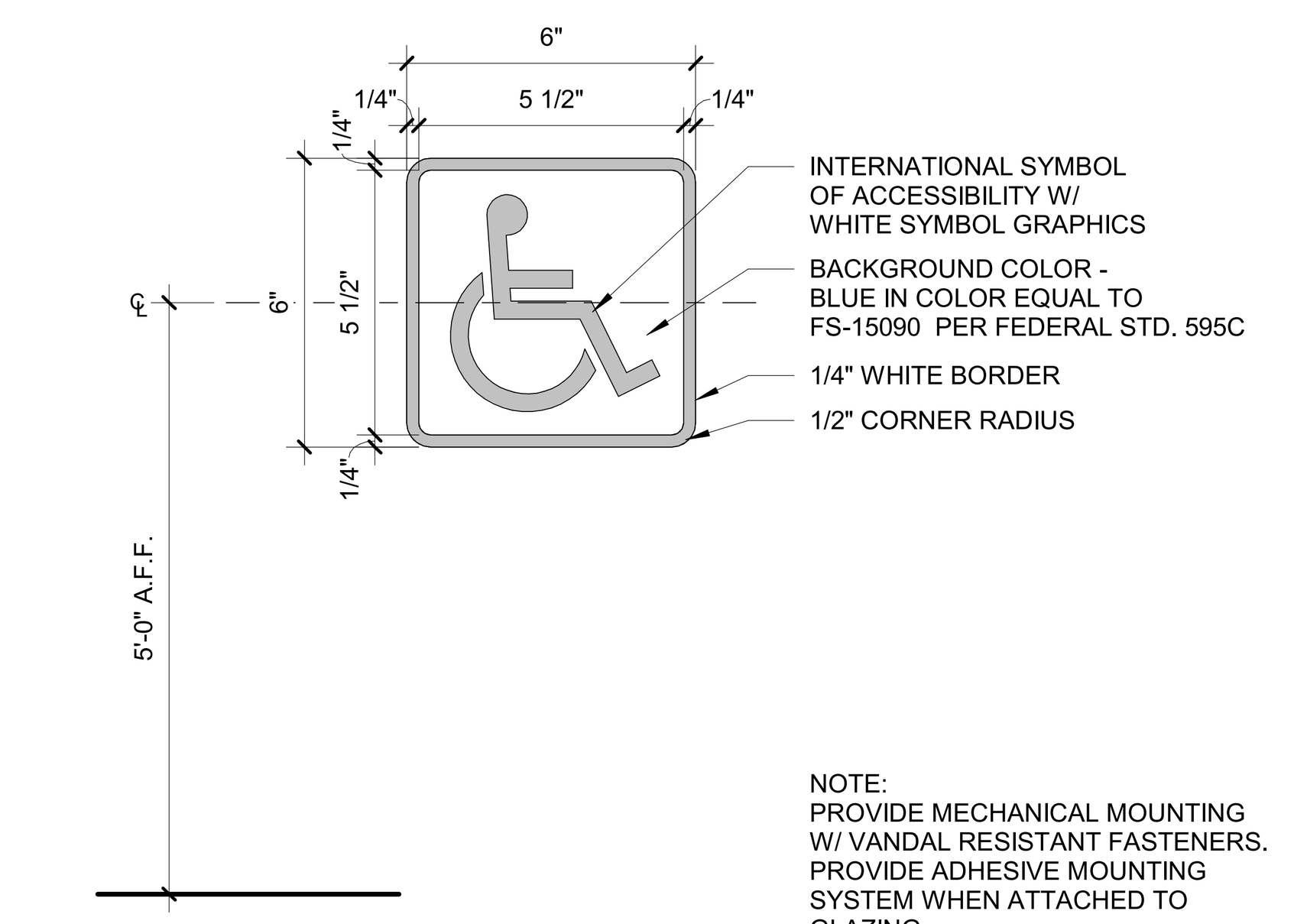

NOTE:
PROVIDE MECHANICAL MOUNTING W/ VANDAL RESISTANT FASTENERS. PROVIDE ADHESIVE MOUNTING SYSTEM WHEN ATTACHED TO GLAZING.

ACCESSIBLE ENTRY SIGN | 3" = 1'-0" | 16

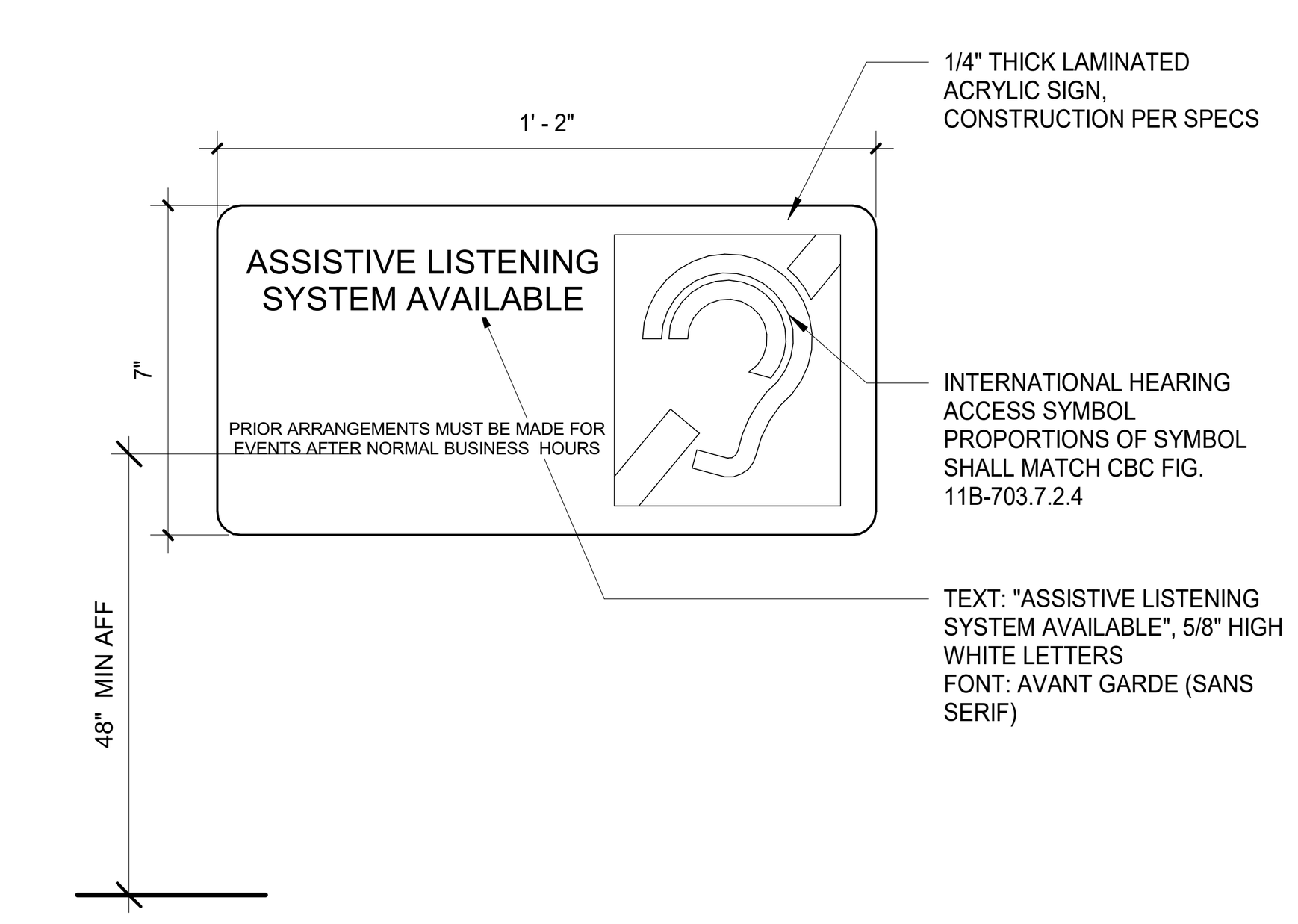

ASSISTIVE LISTENING SIGN | 3" = 1'-0" | 15

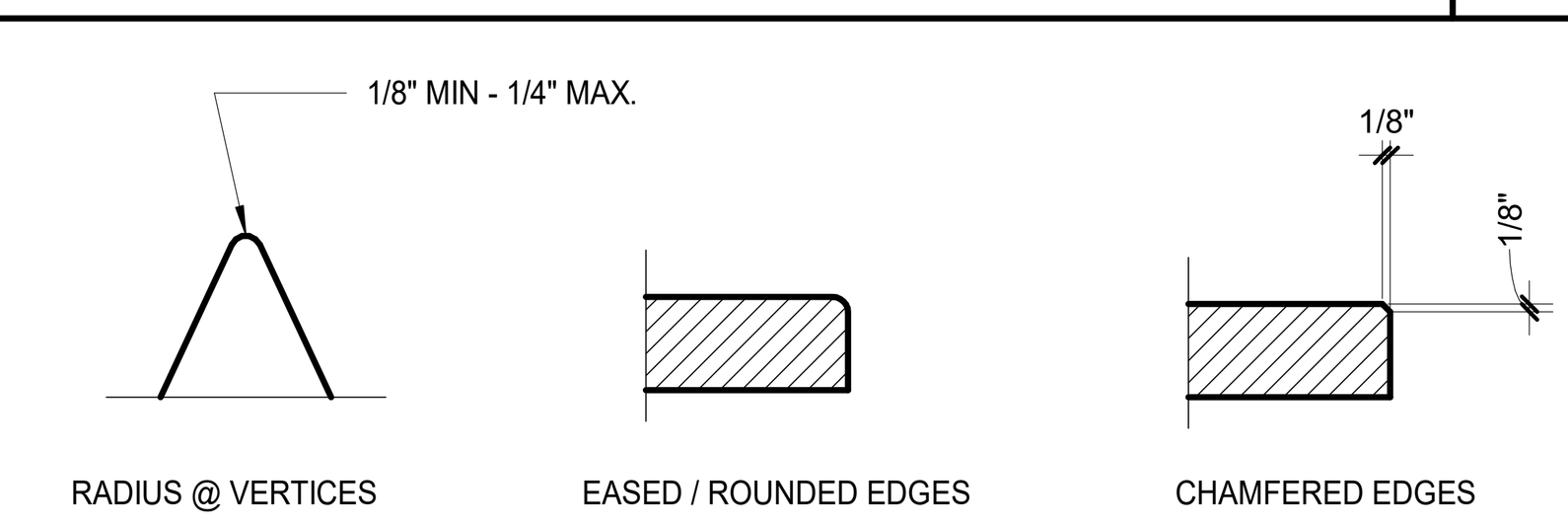

FIGURE 11B-703.7.2.6.4
EDGES AND VERTICES ON GEOMETRIC SYMBOLS

EDGES AND VERTICES ON SYMBOLS | 3" = 1'-0" | 14

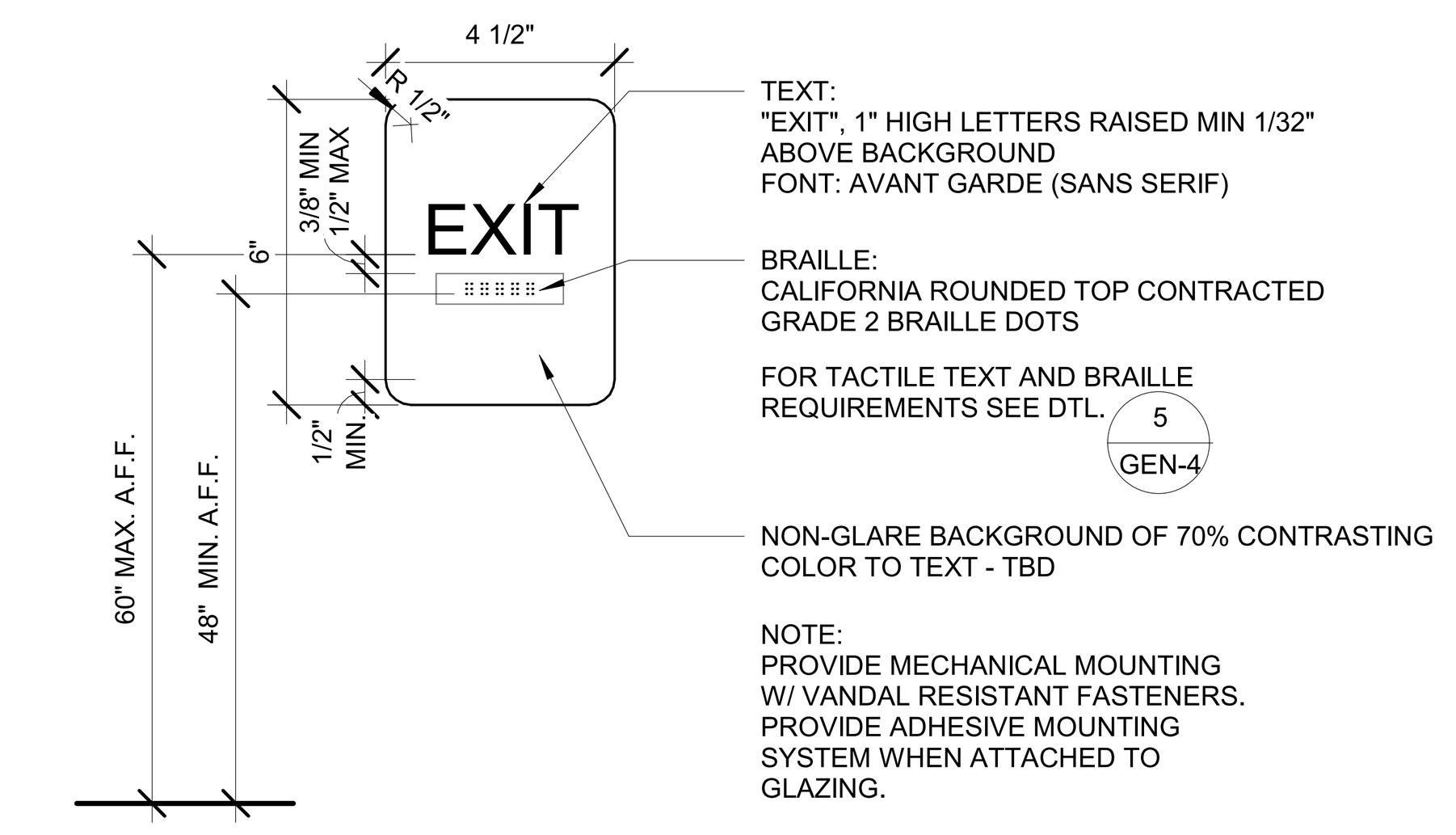

NOTE:
PROVIDE MECHANICAL MOUNTING W/ VANDAL RESISTANT FASTENERS. PROVIDE ADHESIVE MOUNTING SYSTEM WHEN ATTACHED TO GLAZING.

TACTILE EXIT SIGN | 3" = 1'-0" | 13

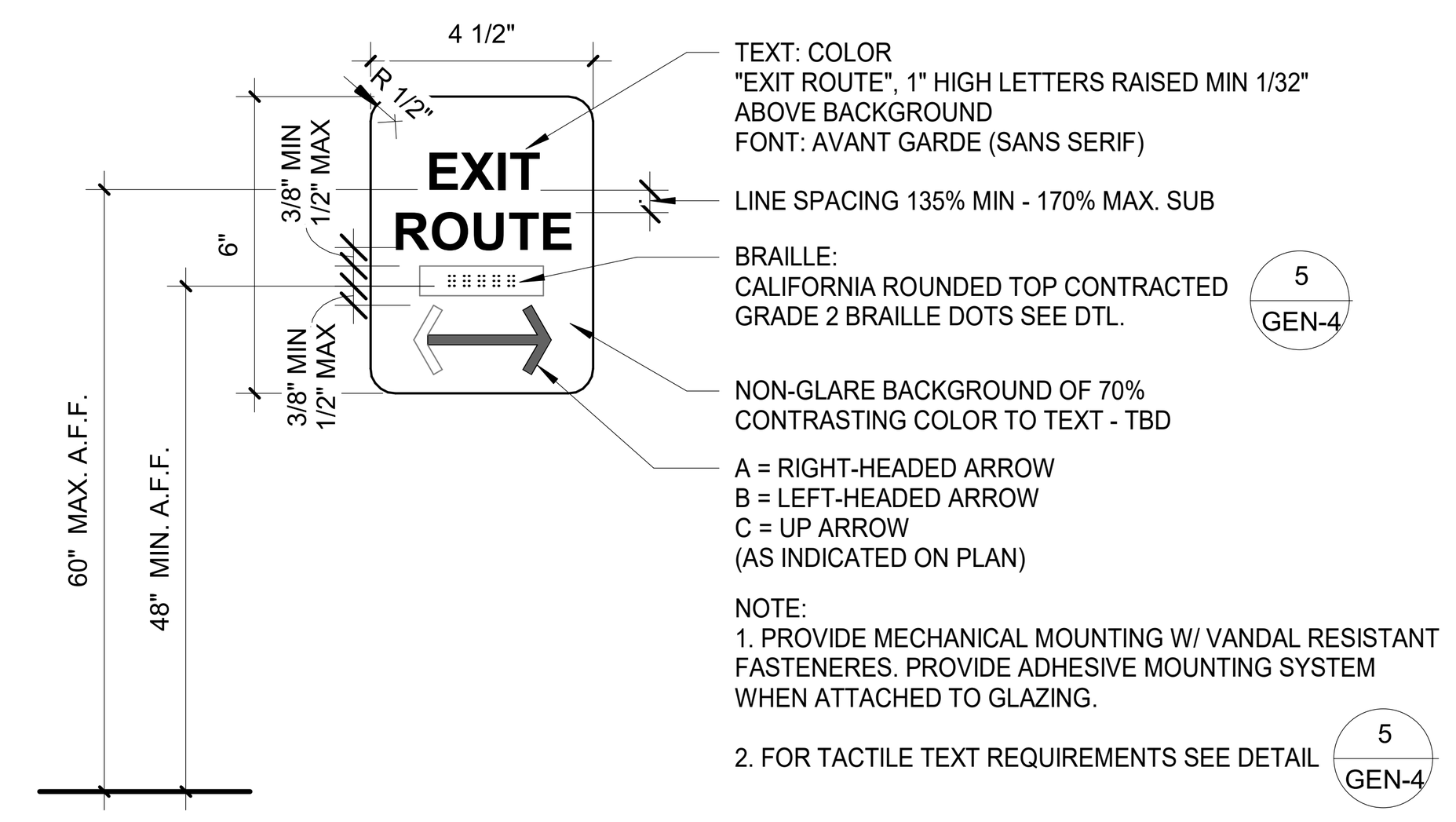

NOTE:
1. PROVIDE MECHANICAL MOUNTING W/ VANDAL RESISTANT FASTENERES. PROVIDE ADHESIVE MOUNTING SYSTEM WHEN ATTACHED TO GLAZING.
2. FOR TACTILE TEXT REQUIREMENTS SEE DETAIL 5 GEN-4

TACTILE EXIT ROUTE SIGN | 3" = 1'-0" | 12

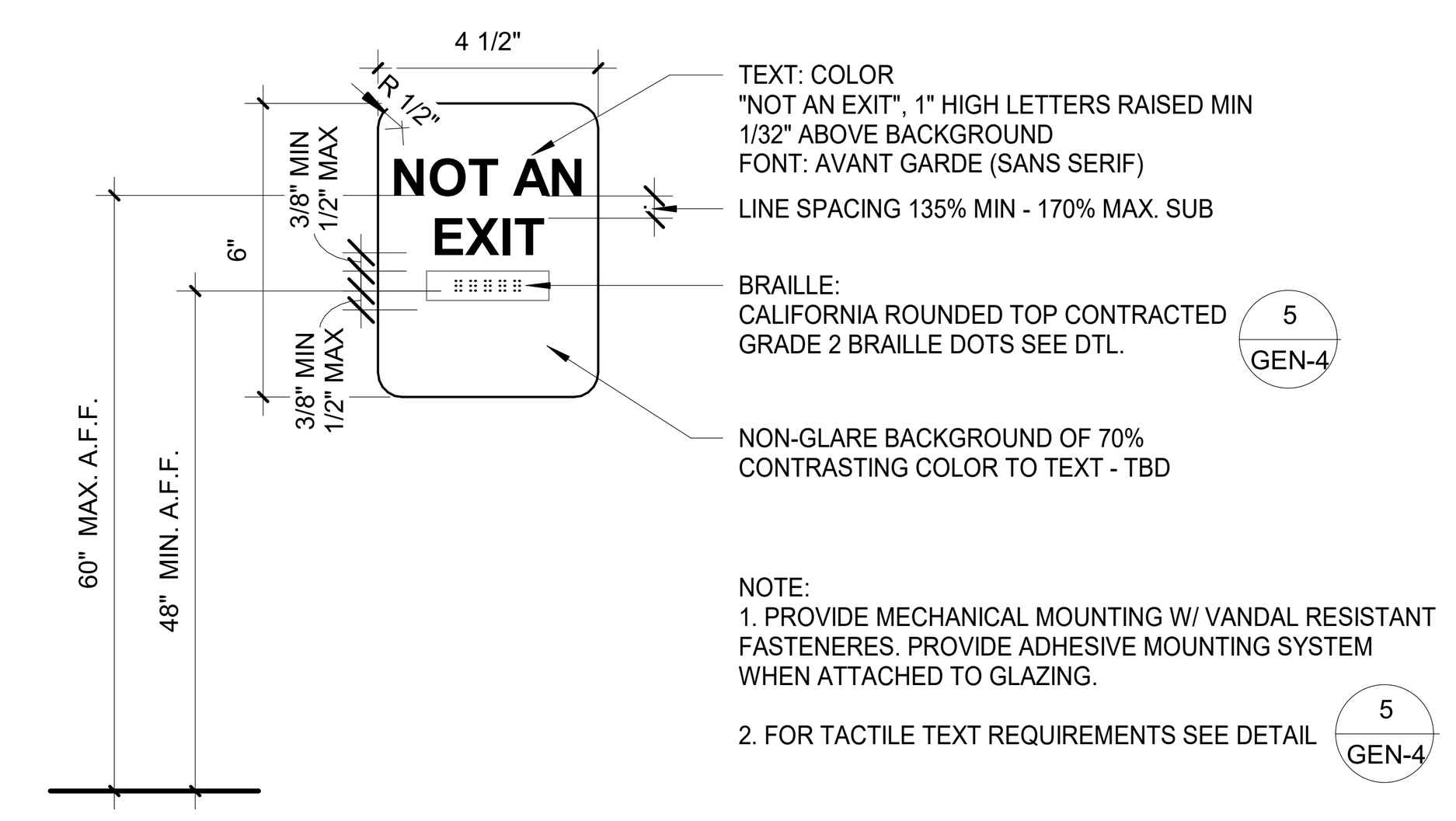

NOTE:
1. PROVIDE MECHANICAL MOUNTING W/ VANDAL RESISTANT FASTENERES. PROVIDE ADHESIVE MOUNTING SYSTEM WHEN ATTACHED TO GLAZING.
2. FOR TACTILE TEXT REQUIREMENTS SEE DETAIL 5 GEN-4

TACTILE NOT AN EXIT SIGN | 3" = 1'-0" | 11

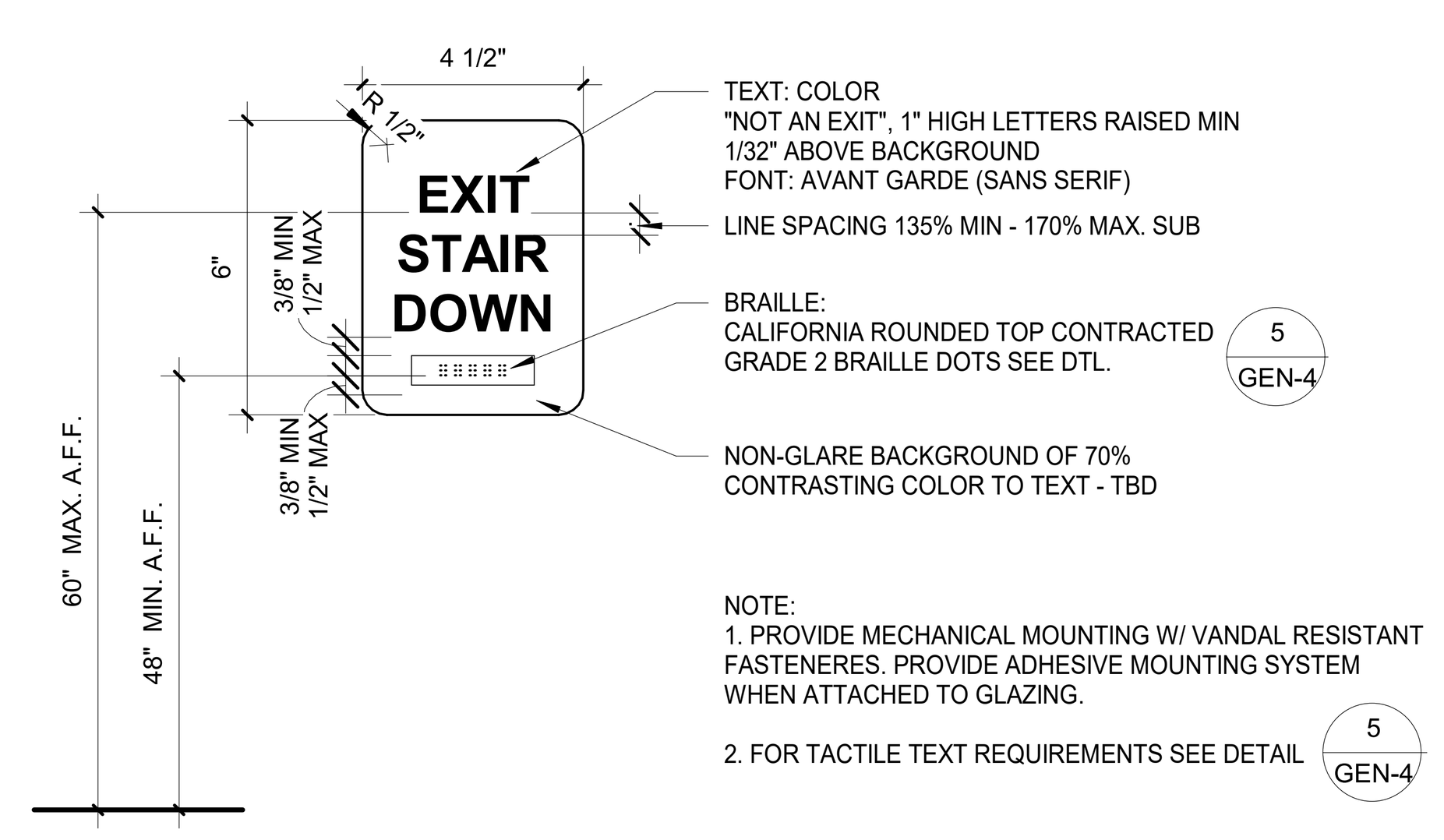

NOTE:
1. PROVIDE MECHANICAL MOUNTING W/ VANDAL RESISTANT FASTENERES. PROVIDE ADHESIVE MOUNTING SYSTEM WHEN ATTACHED TO GLAZING.
2. FOR TACTILE TEXT REQUIREMENTS SEE DETAIL 5 GEN-4

TACTILE EXIT STAIR DOWN SIGN | 3" = 1'-0" | 10

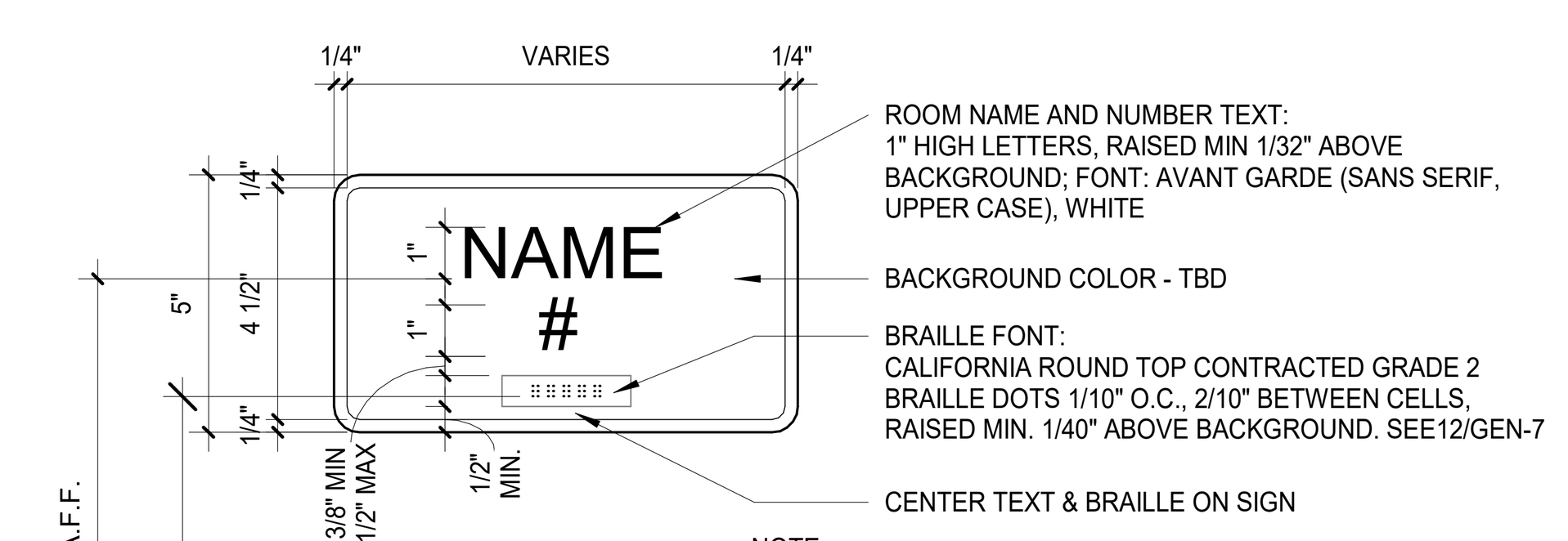

NOTE:
1. PROVIDE MECHANICAL MOUNTING W/ VANDAL RESISTANT FASTENERS. PROVIDE ADHESIVE MOUNTING SYSTEM WHEN ATTACHED TO GLAZING.
2. PRIMARY ENTRANCES TO RECEIVE ROOM IDENTIFICATION SIGN, SECONDARY ENTRANCES TO HAVE ROOM NUMBER U.N.O., REFER ACCESSIBILITY PLAN AND DOOR SCHEDULE
3. SEE DETAIL 5/- FOR TACTILE TEXT REQUIREMENTS

ROOM DESIGNATION SIGN | 3" = 1'-0" | 9

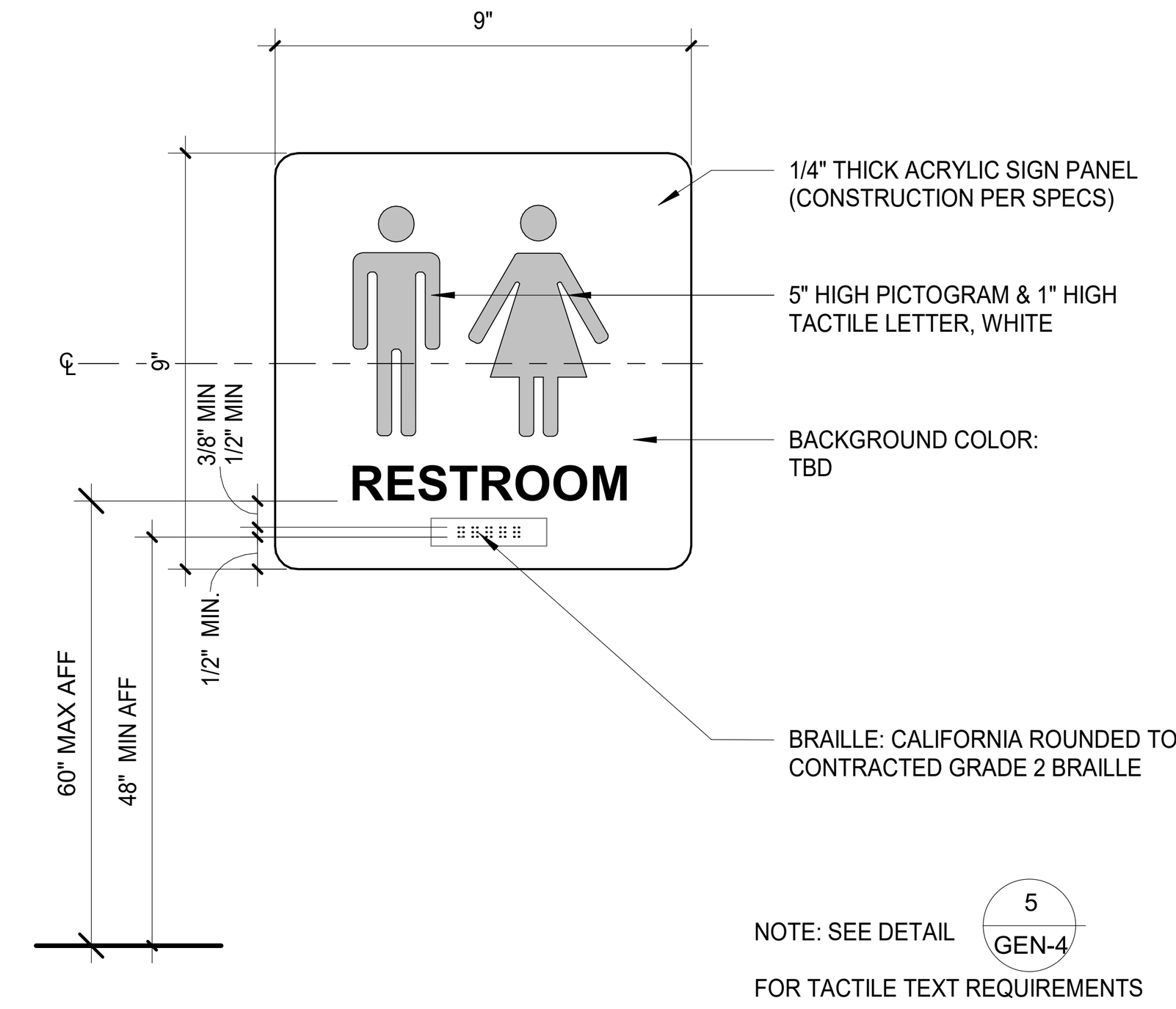

NOTE: SEE DETAIL 5 GEN-4 FOR TACTILE TEXT REQUIREMENTS

RESTROOM SIGN - G/N | 3" = 1'-0" | 8

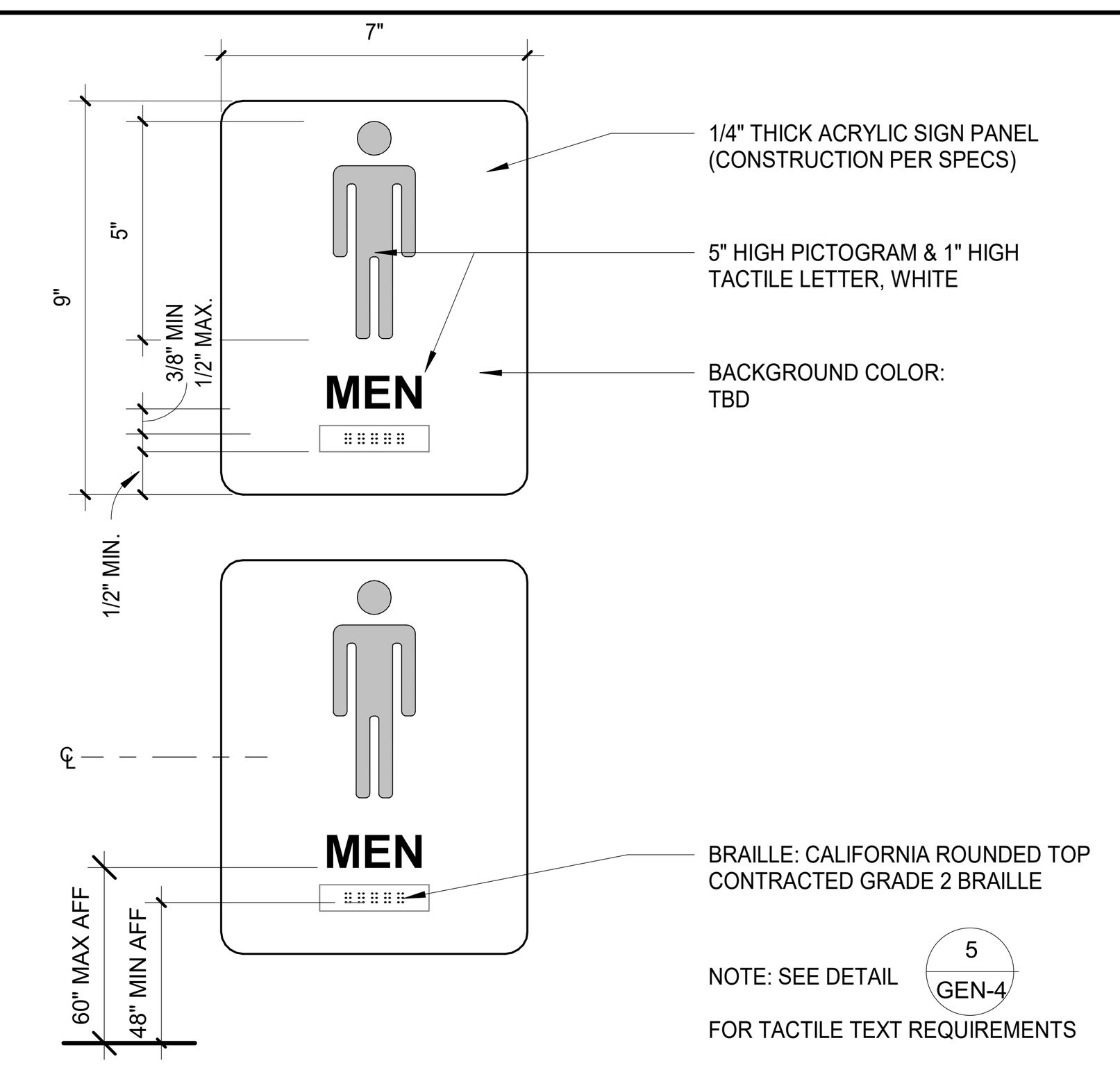

NOTE: SEE DETAIL 5 GEN-4 FOR TACTILE TEXT REQUIREMENTS

RESTROOM SIGN - MENS | 3" = 1'-0" | 7

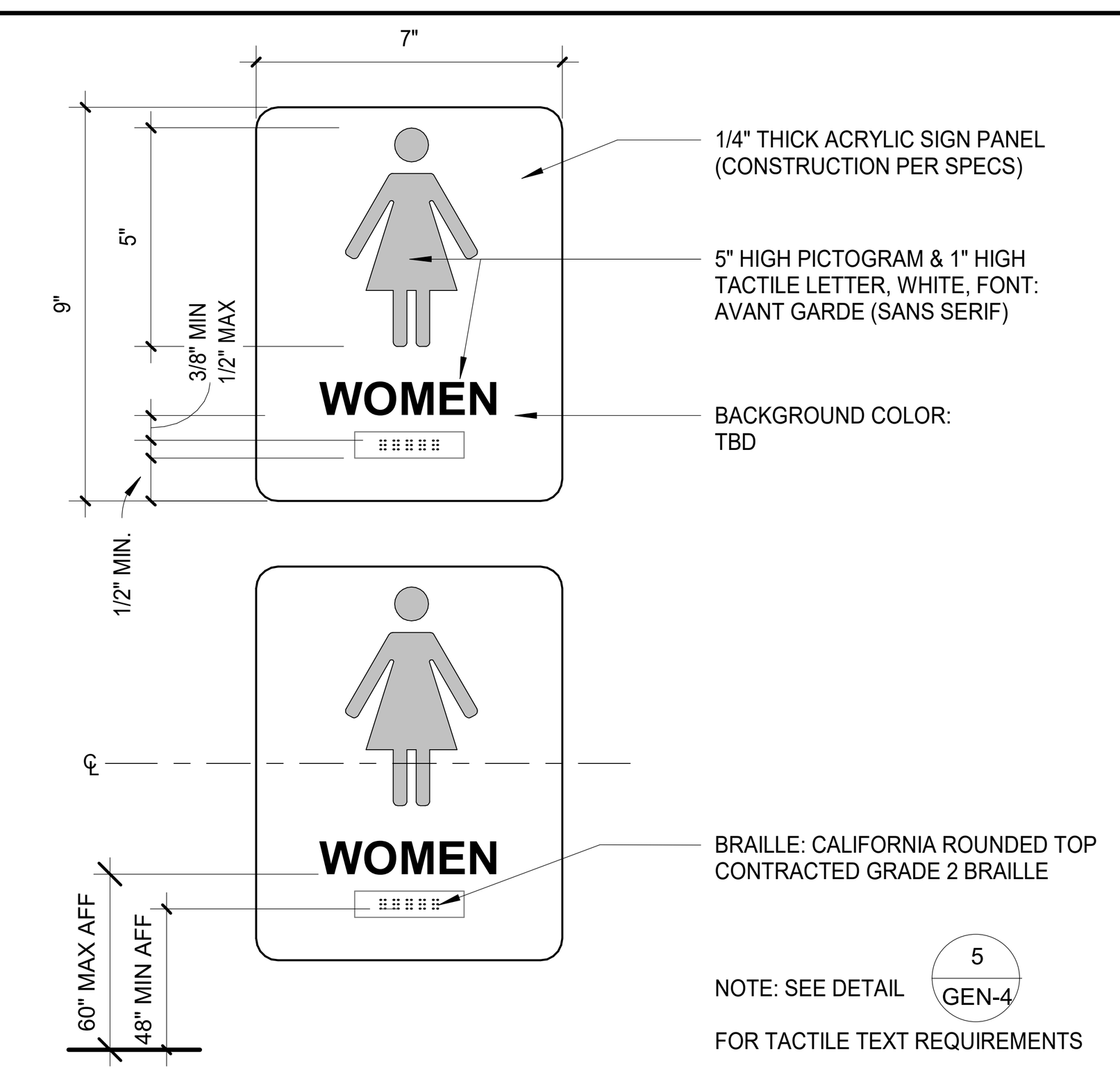

NOTE: SEE DETAIL 5 GEN-4 FOR TACTILE TEXT REQUIREMENTS

RESTROOM SIGN - WOMEN | 3" = 1'-0" | 6

VISUAL CHARACTERS TO COMPLY WITH CBC SECTION 11B-703.5

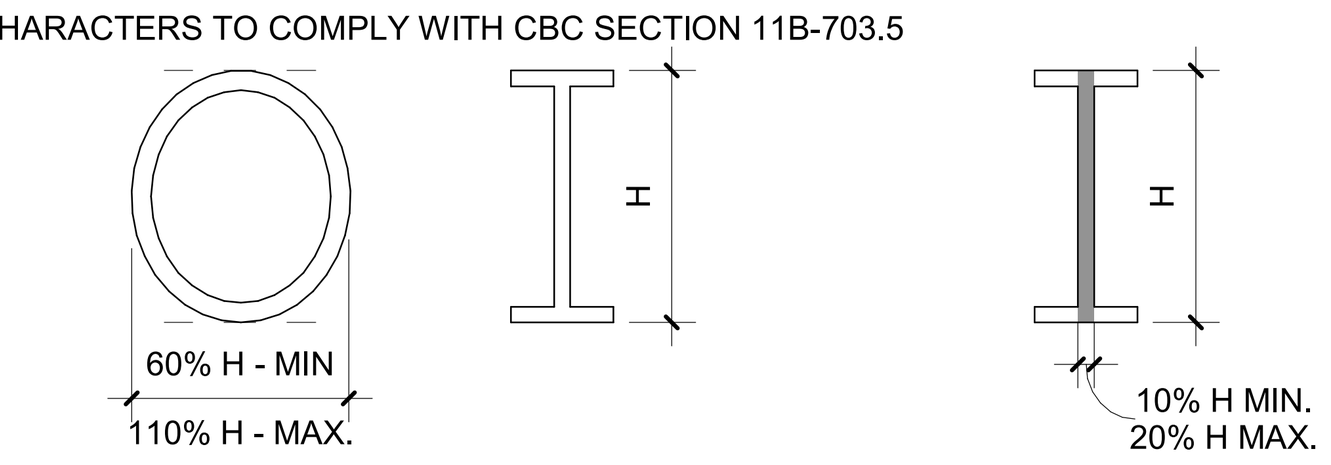

CHARACTER PROPORTIONS

RAISED CHARACTERS ON SIGNS SHALL BE SELECTED FROM FONTS WHERE THE WIDTH OF THE UPPERCASE LETTER "O" IS 60 PERCENT MINIMUM AND 110 PERCENT MAXIMUM OF THE HEIGHT OF THE UPPERCASE LETTER "I".

STROKE PROPORTION

STROKE THICKNESS OF THE UPPERCASE LETTER "I" SHALL BE 10% MINIMUM AND 20% MAXIMUM OF THE HEIGHT OF THE CHARACTER.

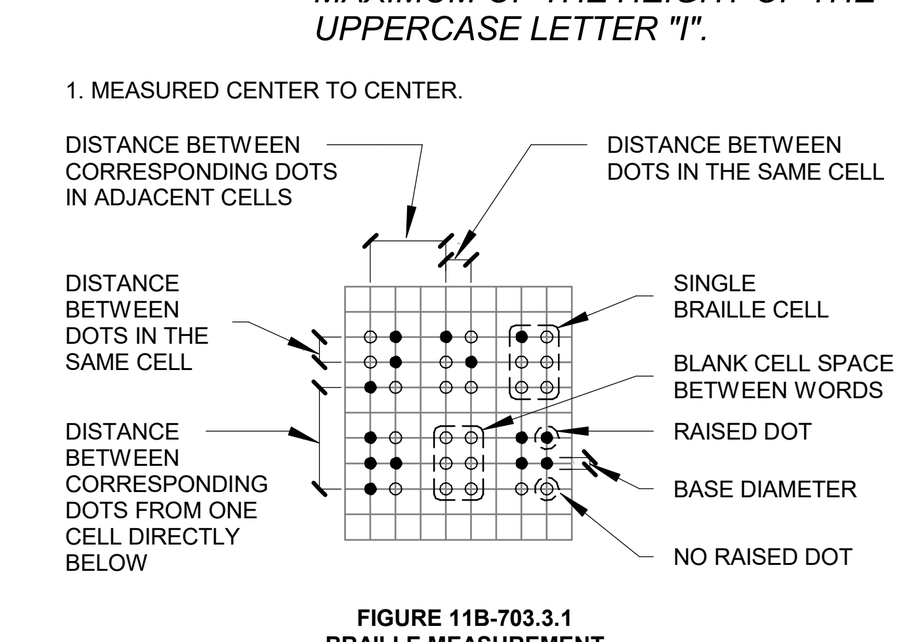

FIGURE 11B-703.3.1
BRAILLE MEASUREMENT

CALIFORNIA CONTRACTED GRADE 2 BRAILLE SHALL BE USED WHEREVER BRAILLE IS REQUIRED. INDIVIDUAL BRAILLE DOTS SHALL EACH BE DISTINCT AND SEPARATE. EACH DOT SHALL BE ROUNDED OR DOMED IN LIEU OF SQUARE SIDED AND FLAT TOPPED. PER CBC TABLE 11B-703.3.1, DOT BASE DIAMETER SHALL BE 0.059" TO 0.063", DISTANCE BETWEN TWO DOTS IN THE SAME CELL SHALL BE 0.100", DISTANCE BETWEEN CORRESPONDING DOTS IN ADJACENT CELLS SHALL BE 0.300", DOT HEIGHT SHALL BE 0.025" TO 0.037", AND DISTANCE BETWEEN CORRESPONDING DOTS FROM ONCE CELL DIRECTLY BELOW SHALL BE 0.395" TO 0.400"

WIDTH TO HEIGHT PROPORTION TEMPLATE

BRAILLE SPACING TEMPLATE PER CALIFORNIA BUILDING CODE (CBC) AND CALIFORNIA CODE OF REGULATIONS (CCR), TITLE 24, PART 2.

TACTILE SIGNAGE TEMPLATES | 1 : 1 | 5

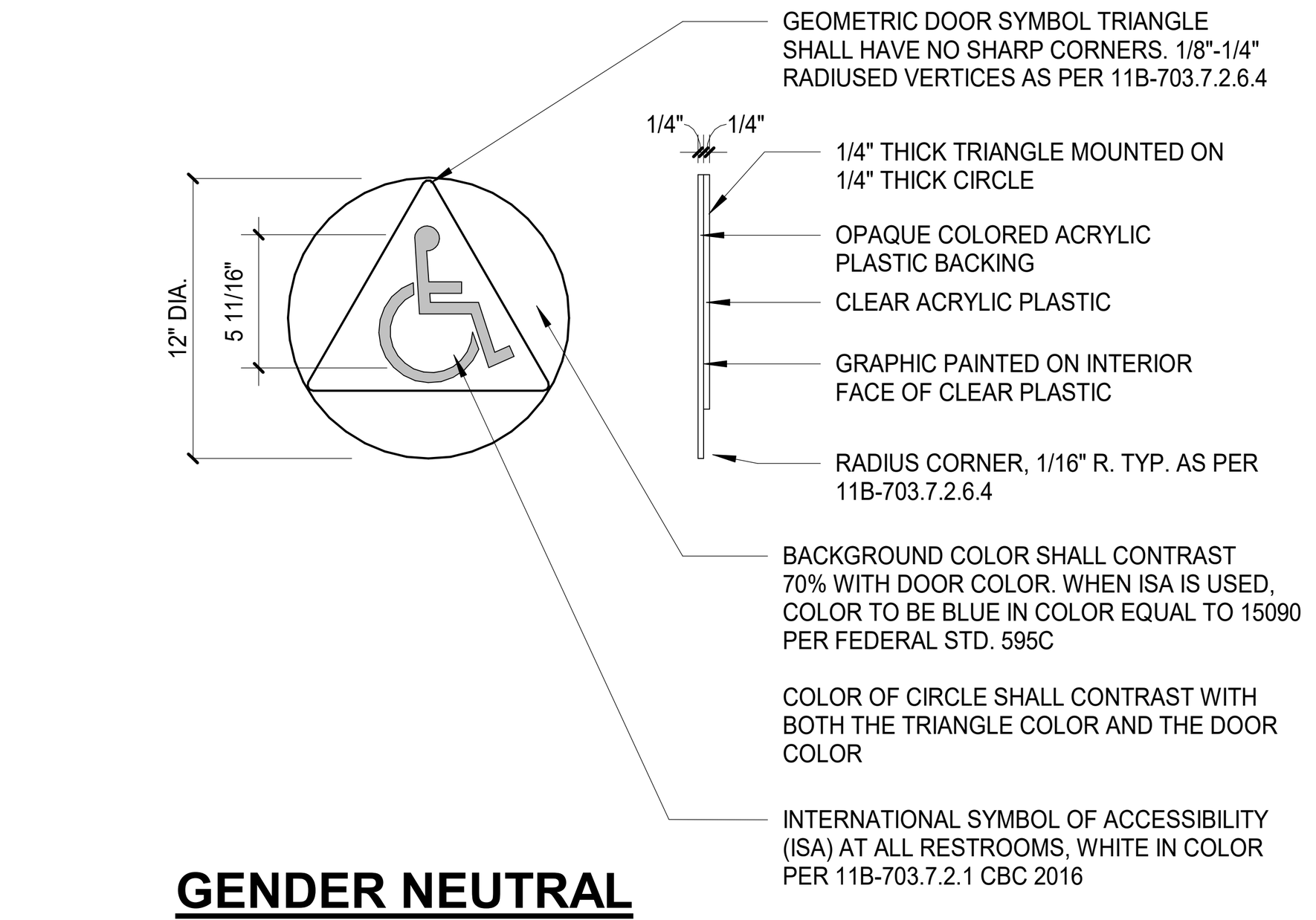

GENDER NEUTRAL

NOTE:
ATTACH SIGNS USING THREE FLATHEAD VANDAL RESISTANT COUNTERSUNK SCREWS AND ADHESIVE. SIGNS SHALL BE CENTERED ON THE DOOR AND MOUNTED BEING A 4'-10" MINIMUM AND A 5'-0" MAXIMUM ABOVE FINISH FLOOR LINE TO CENTER OF SIGN.

TOILET ROOM DOOR SIGNAGE - G/N | 1 1/2" = 1'-0" | 4

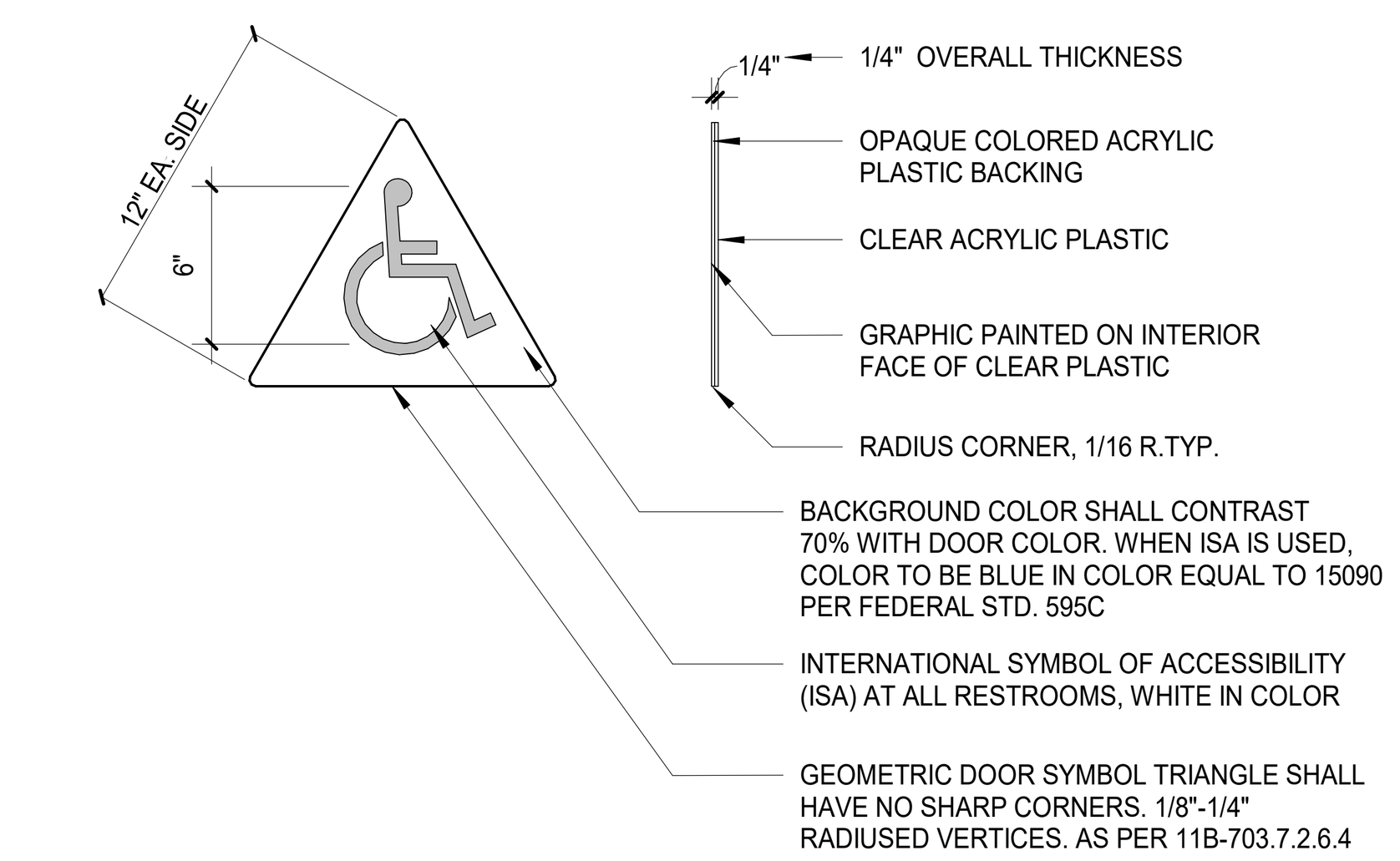

MENS

NOTE:
ATTACH SIGNS USING THREE FLATHEAD VANDAL RESISTANT COUNTERSUNK SCREWS AND ADHESIVE. SIGNS SHALL BE CENTERED ON THE DOOR AND MOUNTED BEING A 4'-10" MINIMUM AND A 5'-0" MAXIMUM ABOVE FINISH FLOOR LINE TO CENTER OF SIGN.

TOILET ROOM DOOR SIGNAGE - MEN | 1 1/2" = 1'-0" | 3

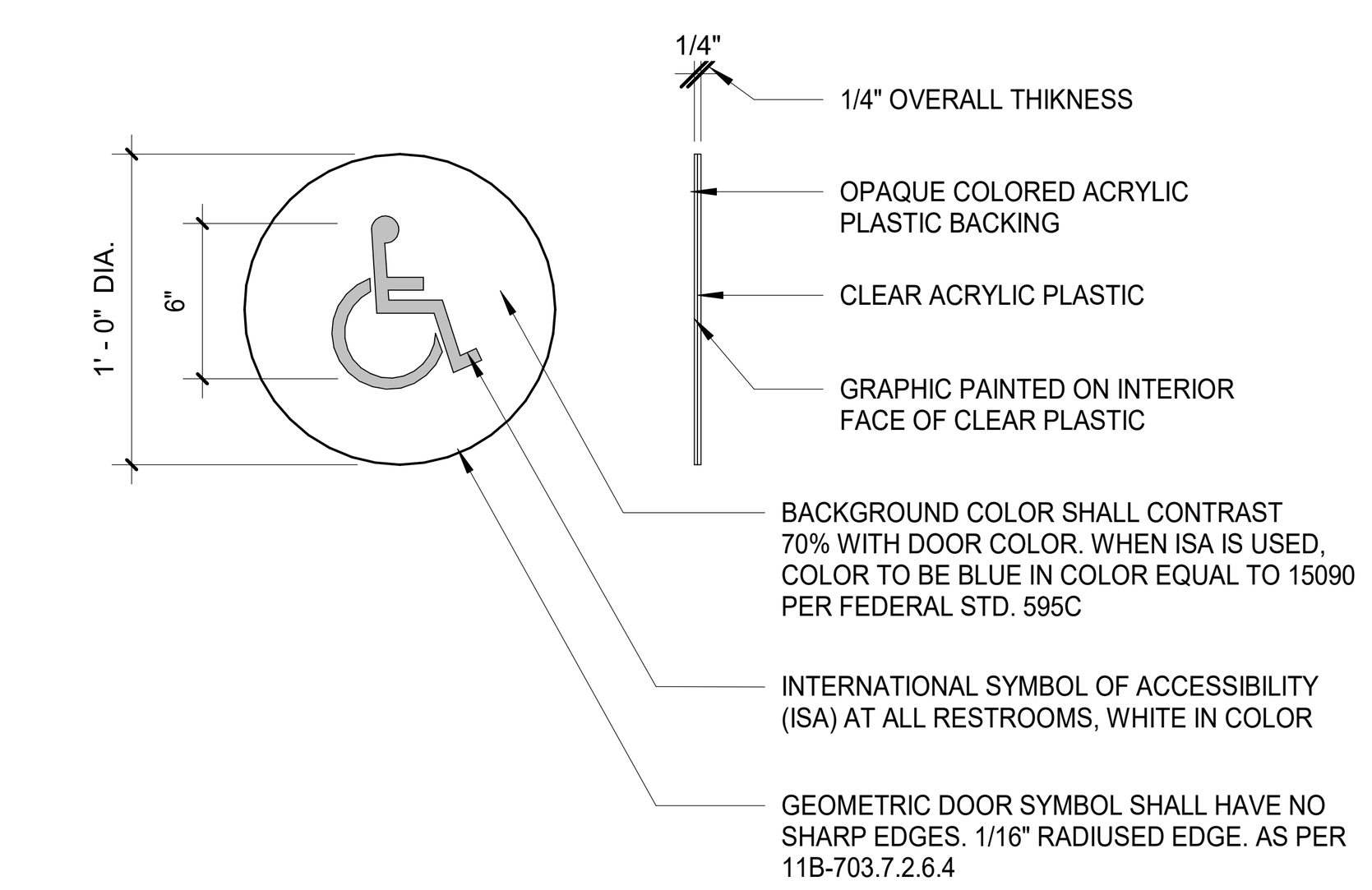

WOMEN

NOTE:
ATTACH SIGNS USING THREE FLATHEAD VANDAL RESISTANT COUNTERSUNK SCREWS AND ADHESIVE. SIGNS SHALL BE CENTERED ON THE DOOR AND MOUNTED BEING A 4'-10" MINIMUM AND A 5'-0" MAXIMUM ABOVE FINISH FLOOR LINE TO CENTER OF SIGN.

TOILET ROOM DOOR SIGNAGE - WOMEN | 1 1/2" = 1'-0" | 2

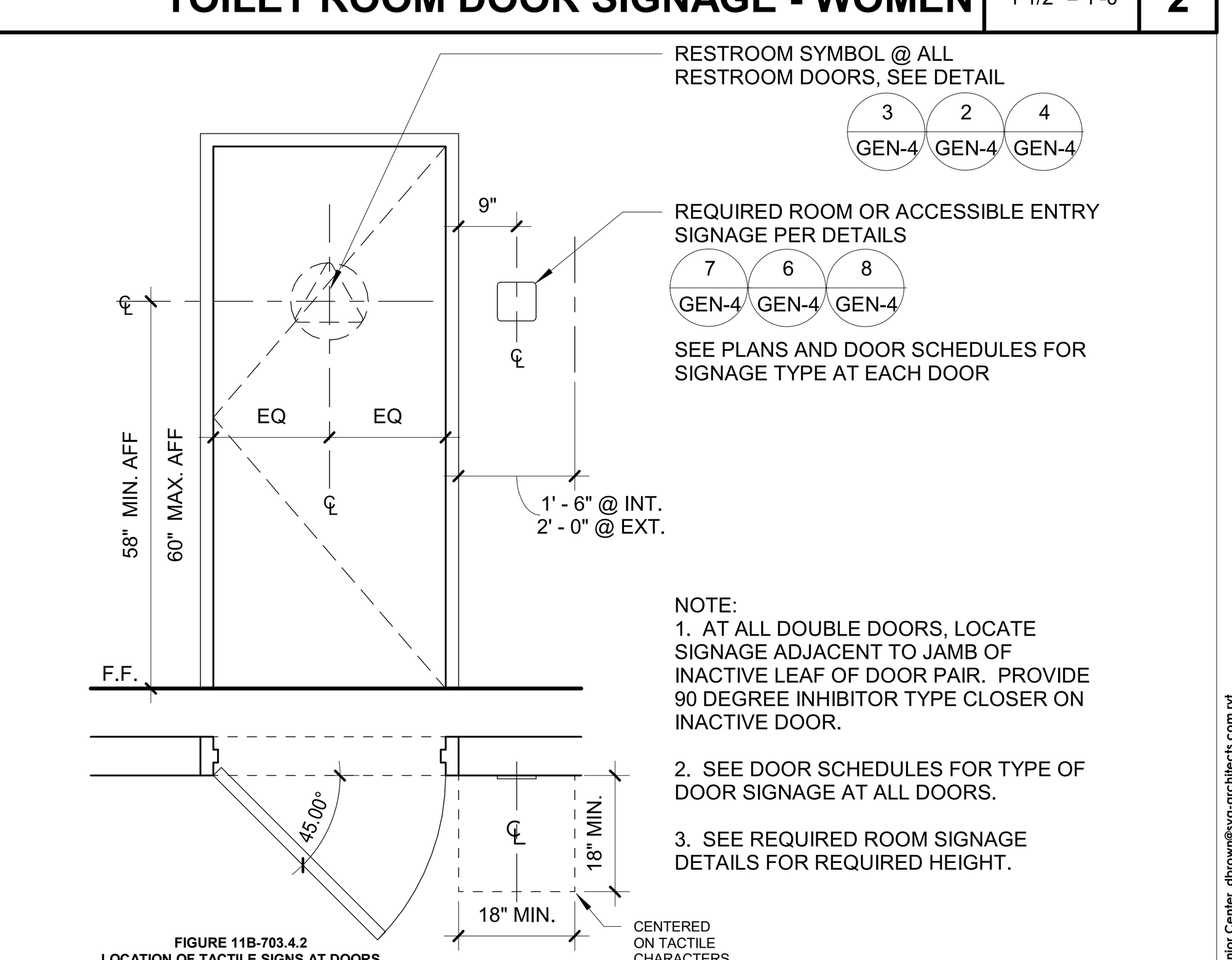

FIGURE 11B-703.4.2
LOCATION OF TACTILE SIGNS AT DOORS

NOTE:
1. AT ALL DOUBLE DOORS, LOCATE SIGNAGE ADJACENT TO JAMB OF INACTIVE LEAF OF DOOR PAIR. PROVIDE 90 DEGREE INHIBITOR TYPE CLOSER ON INACTIVE DOOR.
2. SEE DOOR SCHEDULES FOR TYPE OF DOOR SIGNAGE AT ALL DOORS.
3. SEE REQUIRED ROOM SIGNAGE DETAILS FOR REQUIRED HEIGHT.

DOOR ROOM SIGNAGE | 1/2" = 1'-0" | 1

PREPARED BY:

SVA ARCHITECTS
6 HUTTON CENTRE DR, SUITE 1150
SANTA ANA, CA 92707
T 949.809.3380 WWW.SVA-ARCHITECTS.COM

THIS DOCUMENT CONTAINS INFORMATION PROPRIETARY TO SVA ARCHITECTS INC. AND IS FURNISHED IN CONFIDENCE FOR THE LIMITED PURPOSE OF EVALUATION, BIDDING OR REVIEW. THIS DOCUMENT OR ITS CONTENTS MAY NOT BE USED FOR ANY OTHER PURPOSE AND MAY NOT BE REPRODUCED OR DISCLOSED TO OTHERS WITHOUT THE PRIOR WRITTEN CONSENT OF SVA ARCHITECTS INC. ALL RIGHTS RESERVED, © COPYRIGHT 2018.

LICENSED ARCHITECT ROBERT M. SIMONS No. C-18301 JAN. 31, 2025 STATE OF CALIFORNIA

REVISIONS

NO.	DESCRIPTION	DATE	APPROVED
1	90% CD SUBMITTAL	12/15/2022	
2	100% CD SUBMITTAL	05/01/2023	
3	FINAL SUBMITTAL	06/30/2023	

B.M.: THE CITY OF GARDENA BENCHMARK NO. 5D-15 ELEV. = 43.508'

CITY OF GARDENA
DEPARTMENT OF PUBLIC WORKS - ENGINEERING
PROJECT SIGNAGE
COMMUNITY AQUATICS & SENIOR CENTER
GEN-4

	INITIAL	DATE
DESIGNED BY	AP/EC	05/25/2022
DRAWN BY	NC	06/20/23
CHECKED BY	DB	06/29/23

APPROVED BY:
APPROVED BY: DIRECTOR OF PUBLIC WORKS

SHT. 42 OF 195 DWG. NO. 5-2606

GARDENA COMMUNITY AQUATICS AND SENIOR CENTER - CITY SUBMITTAL SET

FILE PATH: C:\Users\dbrown\Documents\Gardena_Community Pool and Senior Center_dbrown@sva-architects.com.rvt
PLOT TIME: 10/12/2023 10:31:46 AM

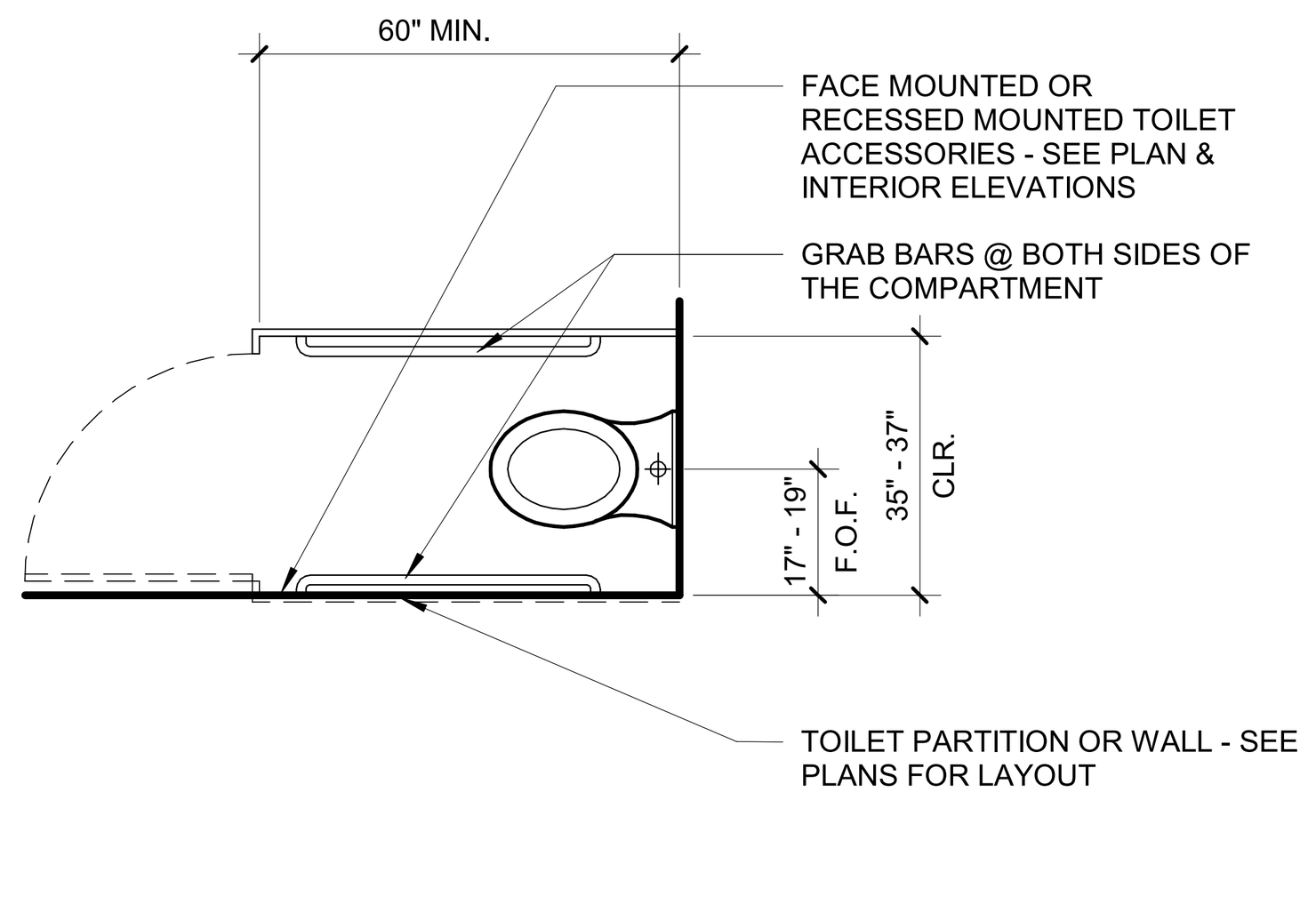

AMBULATORY WATER CLOSET

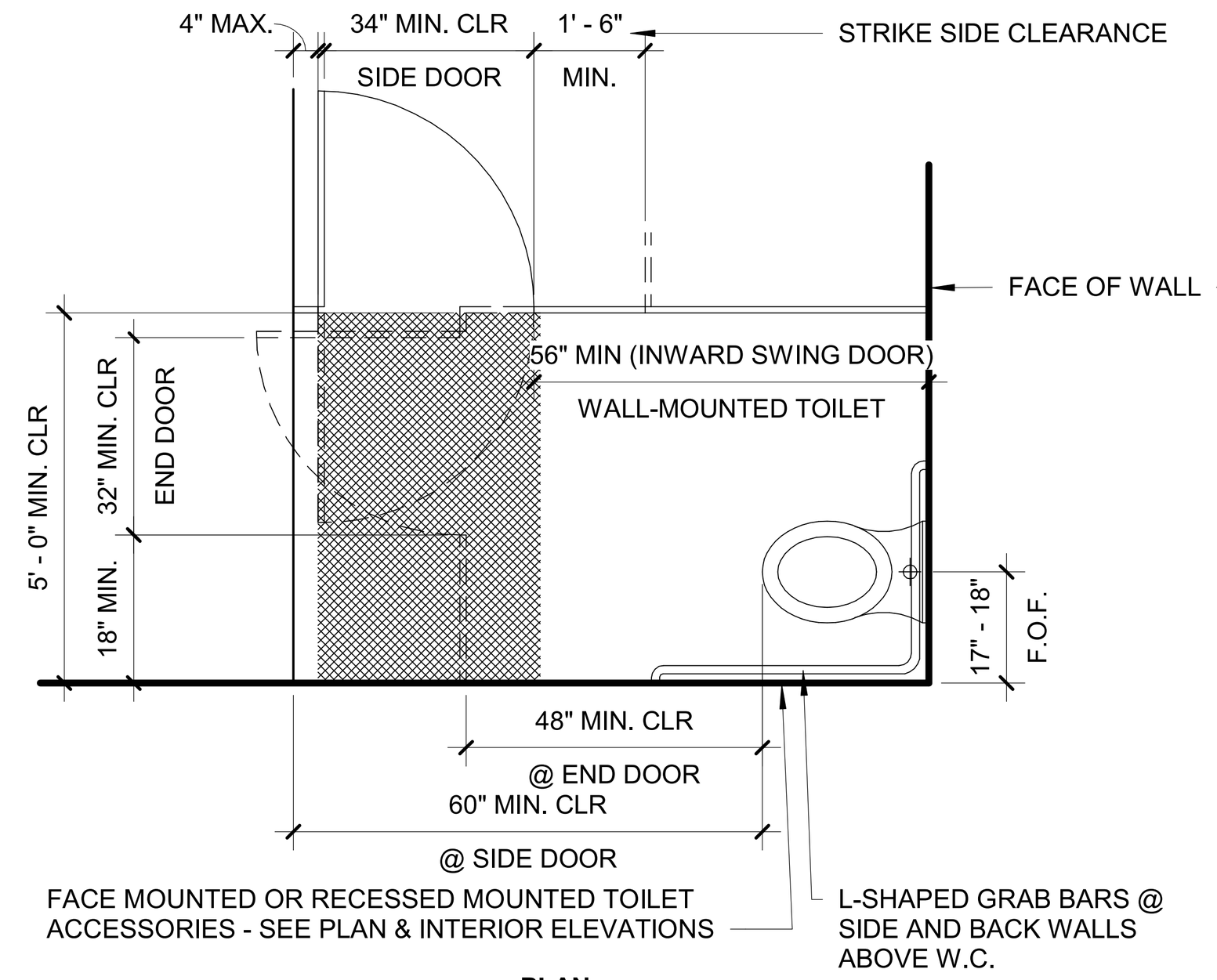

ACCESSIBLE WATER CLOSET

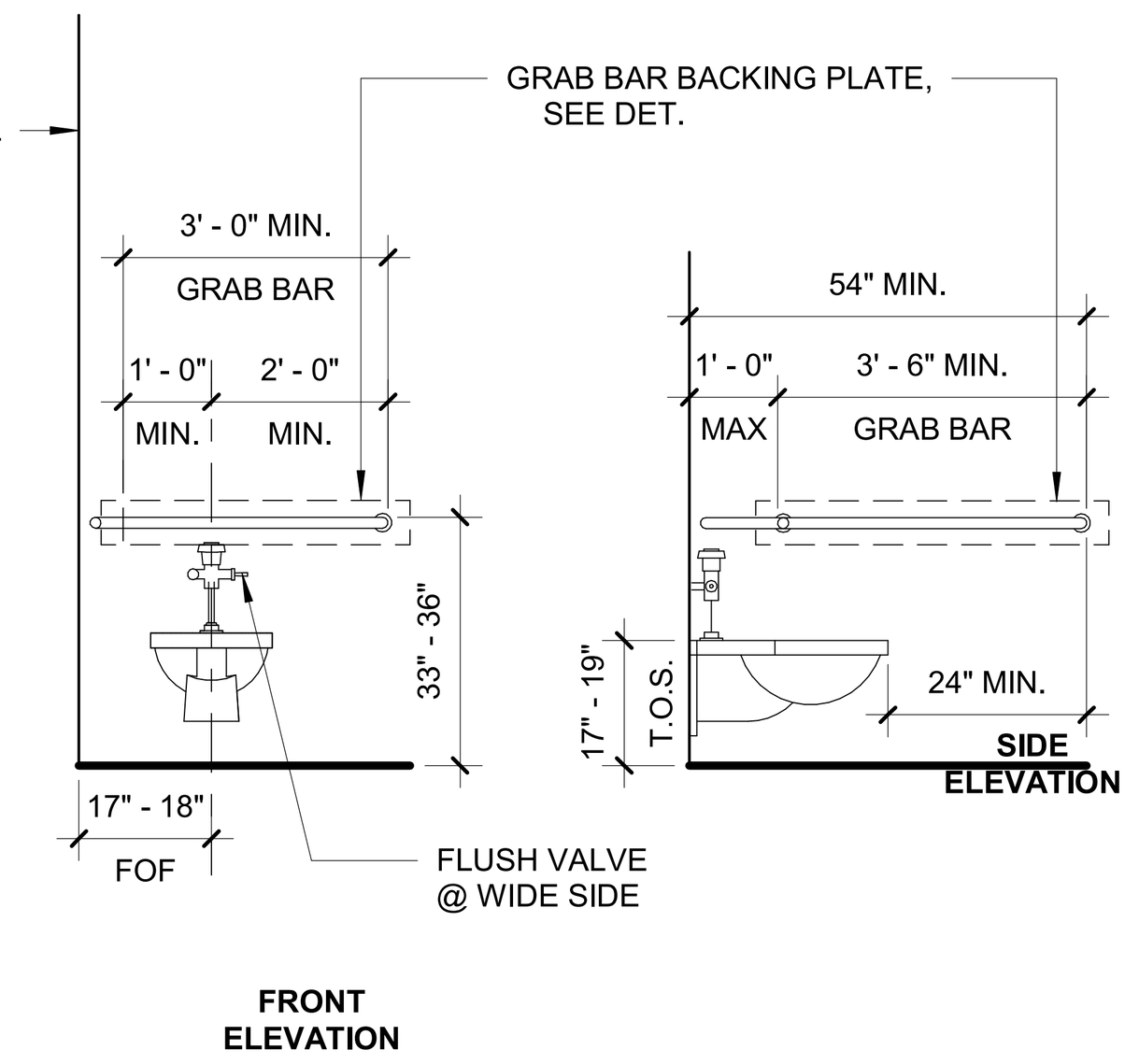

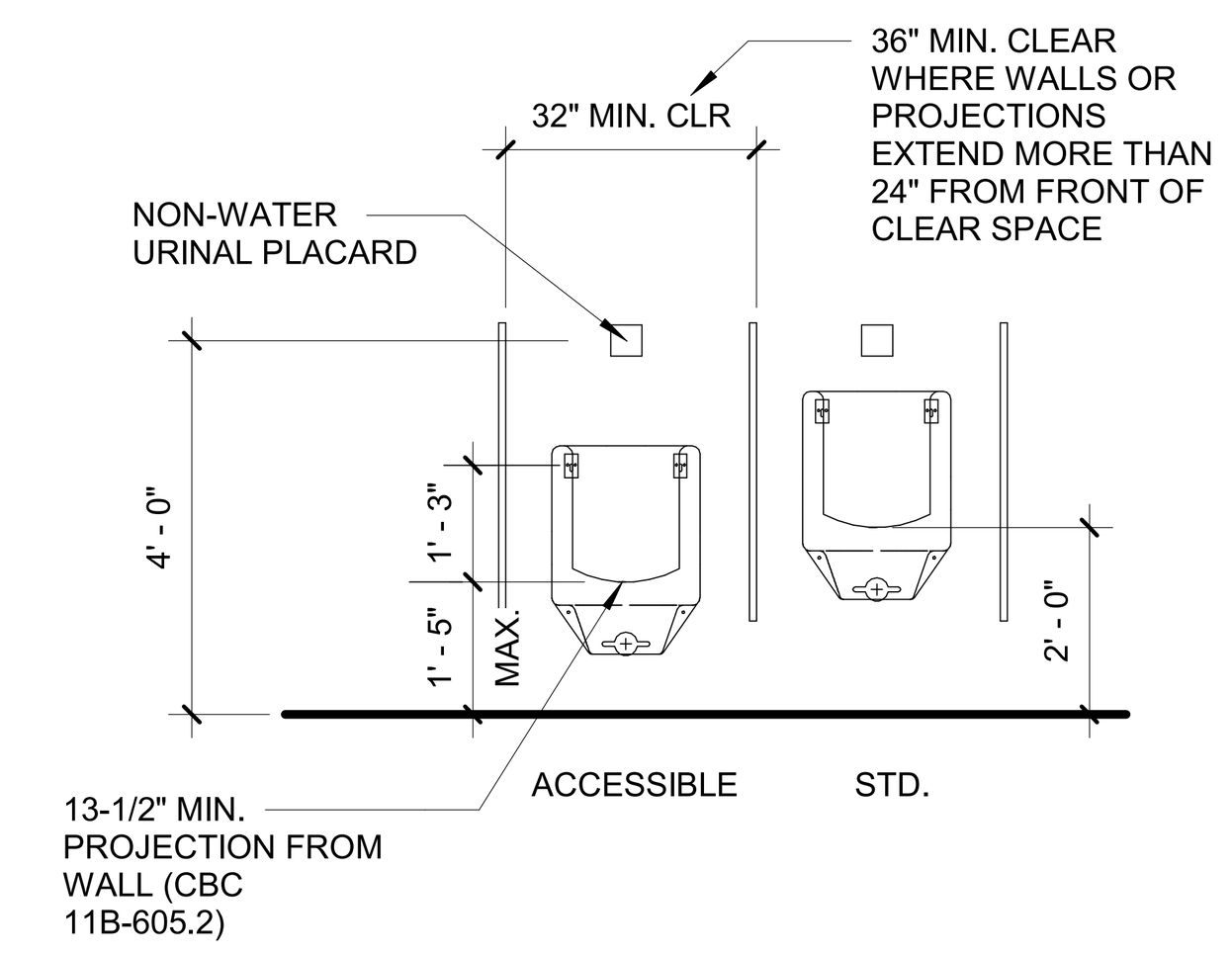

URINAL

LAVATORY NOTES:
1. THERE SHALL BE NO SHARP OR ABRASIVE SURFACES UNDER THE LAVATORY.

2. ALL WATER & DRAIN PIPES ACCESSIBLE UNDER LAVATORIES MUST BE INSULATED OR OTHERWISE COVERED.

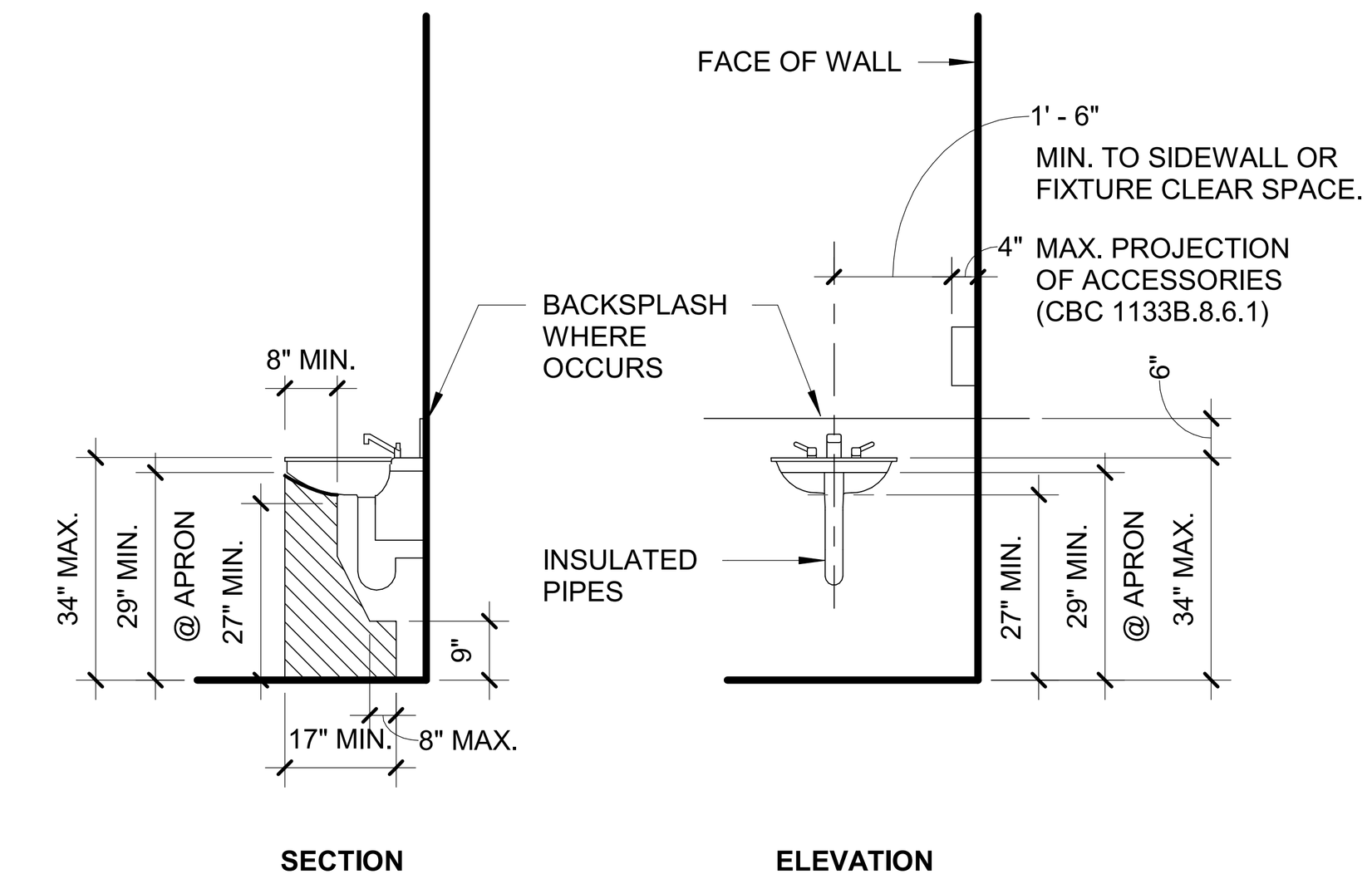

LAVATORY

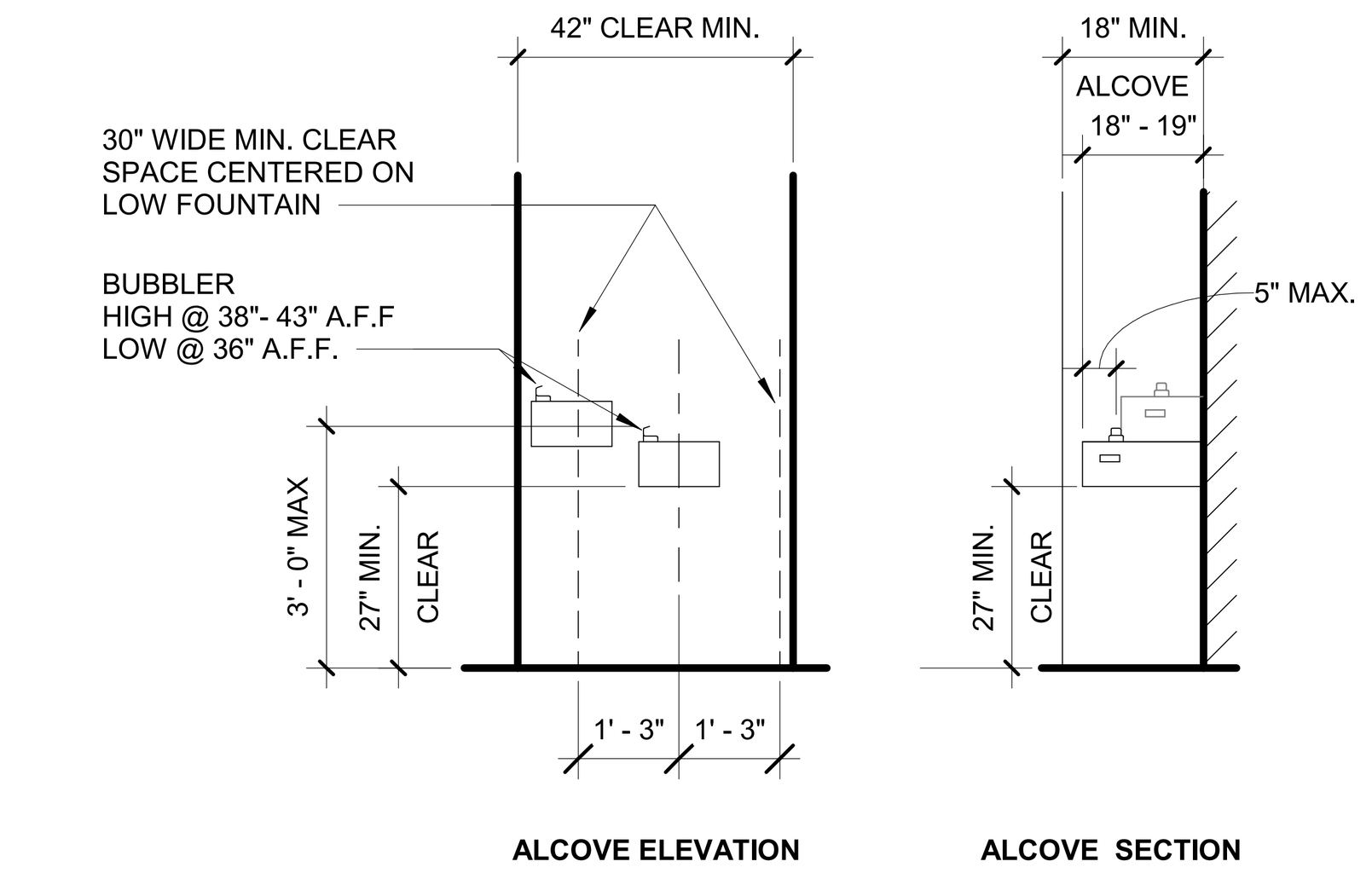

DRINKING FOUNTAIN

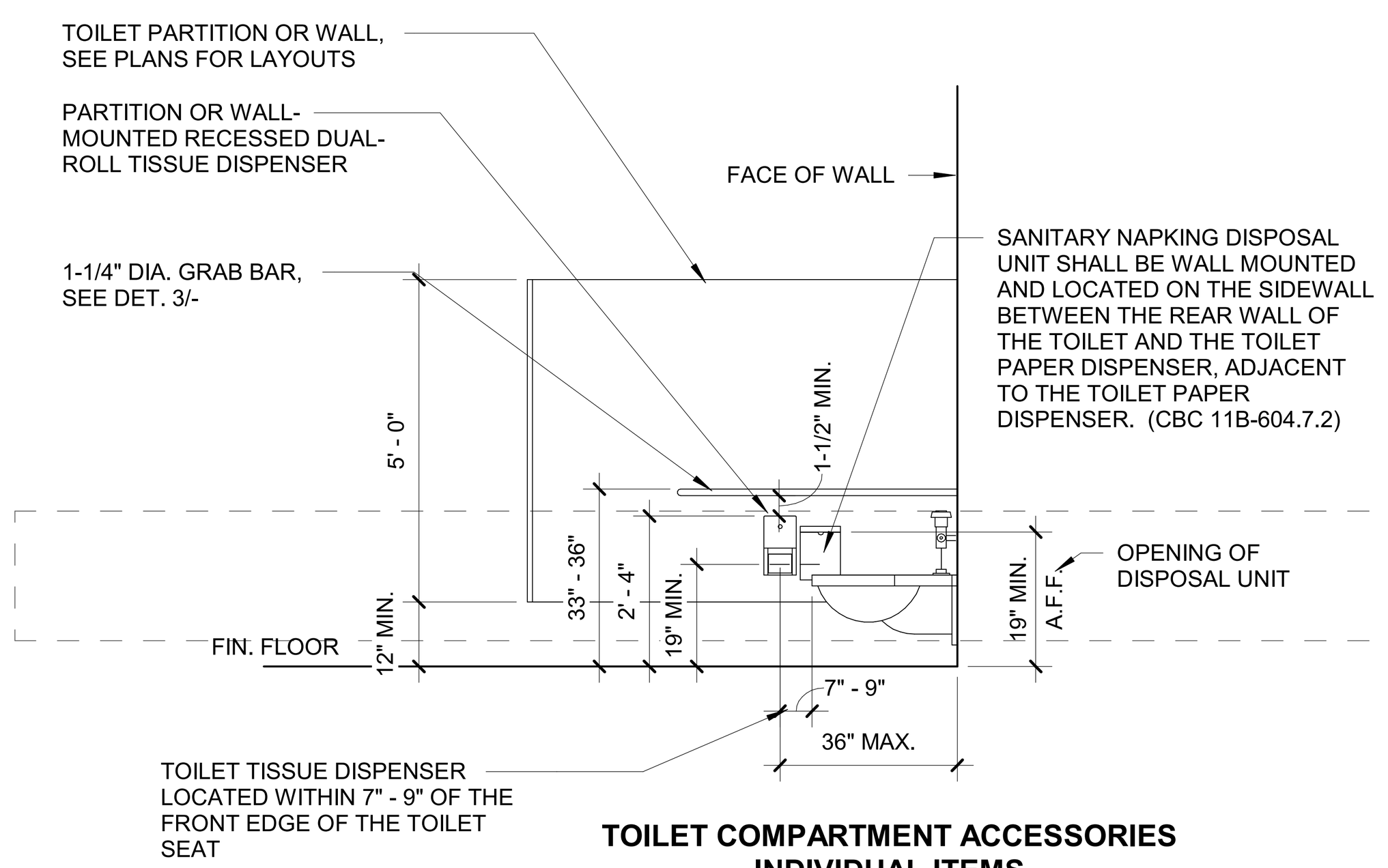

TOILET COMPARTMENT ACCESSORIES INDIVIDUAL ITEMS

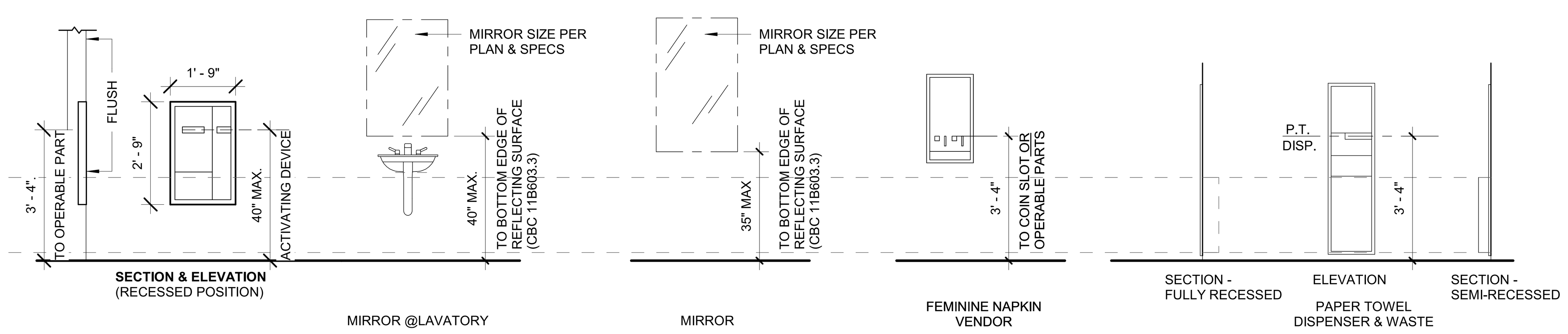

TOILET ROOM ACCESSORY MOUNTING HEIGHTS

ACCESSIBLE TOILET COMPARTMENTS:

1. SEE TOILET ROOM FLOOR PLAN FOR ACCESSIBLE TOILET LOCATION.
2. VERIFY TOILET ACCESSORIES & TYPE OF PARTITION IN SPECS.
3. PROVIDE BACKING IN WALL & TOILET PARTITION FOR GRAB BAR ANCHORAGE.
4. COMPARTMENT DOOR AT ACCESSIBLE WATER CLOSET COMPARTMENT TO PROVIDE 18" STRIKE-SIDE CLEARANCE.
5. NOT USED.
6. OPENING HARDWARE IS CENTERED BETWEEN 34" AND 44" ABOVE FINISH FLOOR (CBC 11B-404.2.7).
7. TOILET PAPER DISPENSER SHALL PERMIT CONTINUOUS PAPER FLOW AND SHALL NOT CONTROL DELIVERY (CBC 11B-604.9.6).
8. ACCESSIBLE COMPARTMENT DOOR EQUIPPED WITH AN AUTOMATIC CLOSING DEVICES (3 SECONDS MIN. SWEEP TIME FROM OPEN POSITION OF 70 DEGREES TO A POINT 3" FROM THE LATCH).
9. SEE ACCESSIBILITY NOTES FOR ADDITIONAL REQUIREMENTS.
10. FLUSH CONTROL SHALL BE ON WIDE SIDE OF TOILET COMPARTMENT AT ALL ACCESSIBLE STALLS, TYP.
11. WHERE ONLY ONE TYPE OF TOILET FIXTURE OR ACCESSORY IS USED, IT SHALL BE POSITIONED FOR ACCESSIBILITY.

TOILET ROOM ACCESSORY & PLUMBING FIXTURE HEIGHTS | 3/8" = 1'-0" | 2

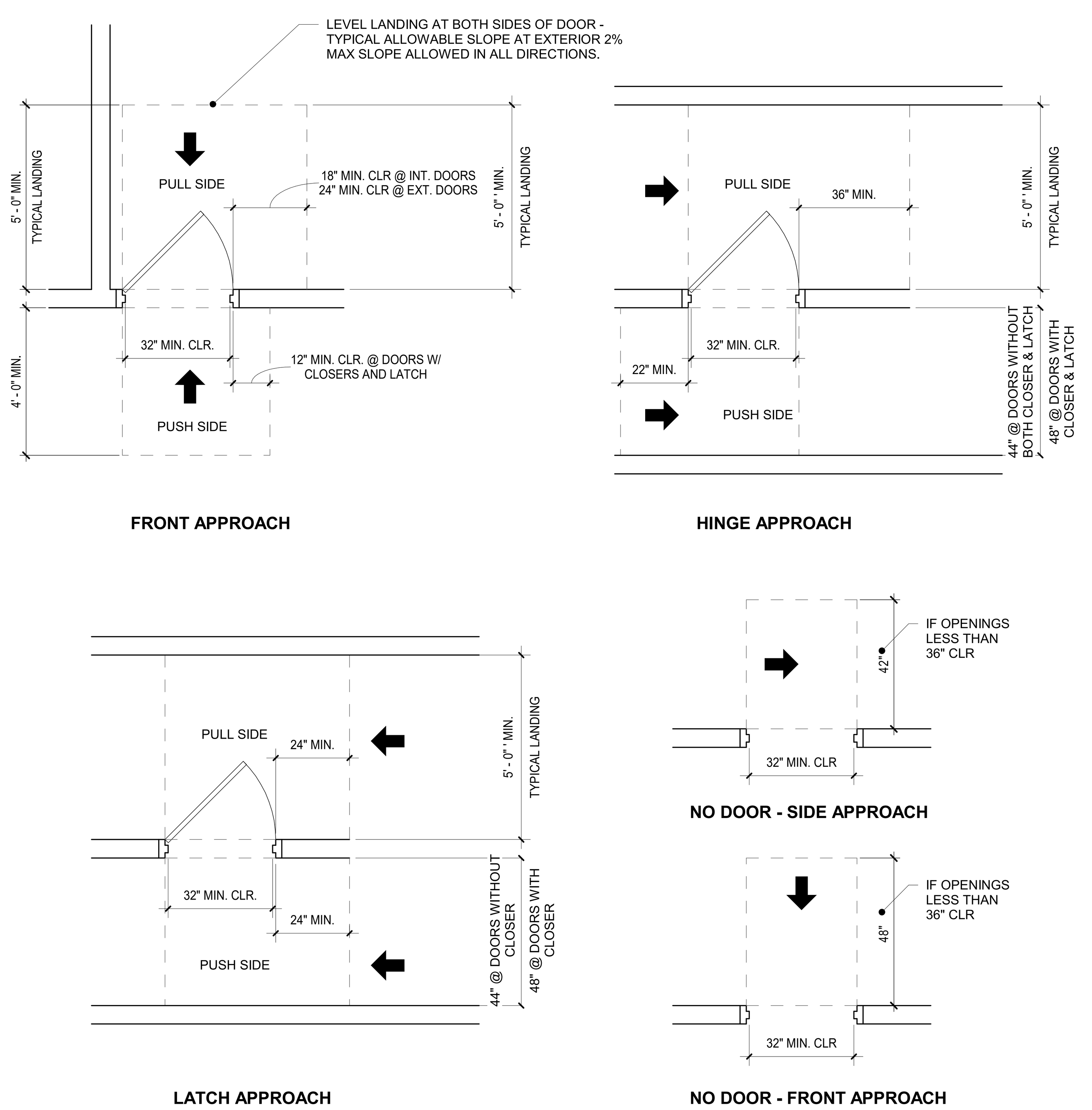

DOOR LANDINGS | 3/8" = 1'-0" | 6

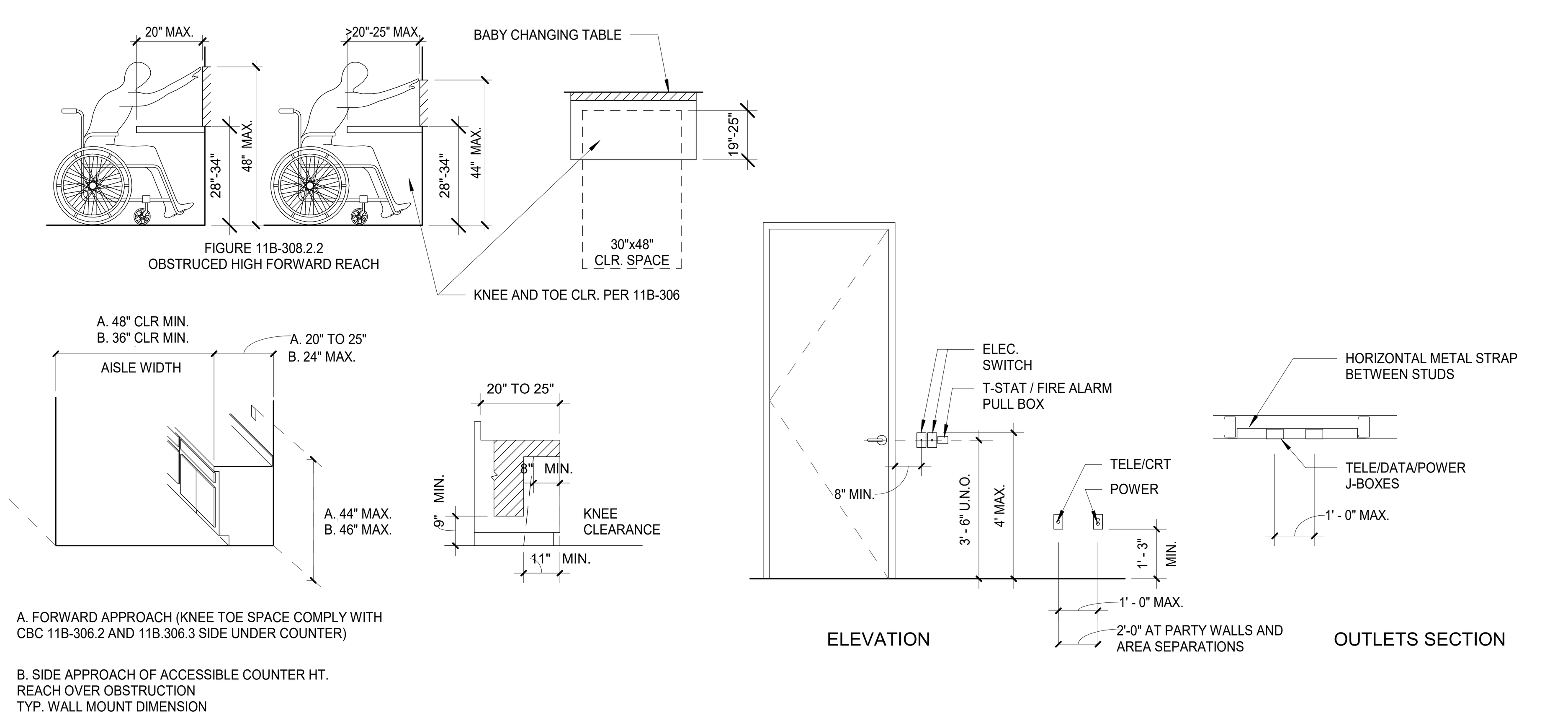

REACH RANGES AND MOUNTING HEIGHTS | 3/8" = 1'-0" | 4

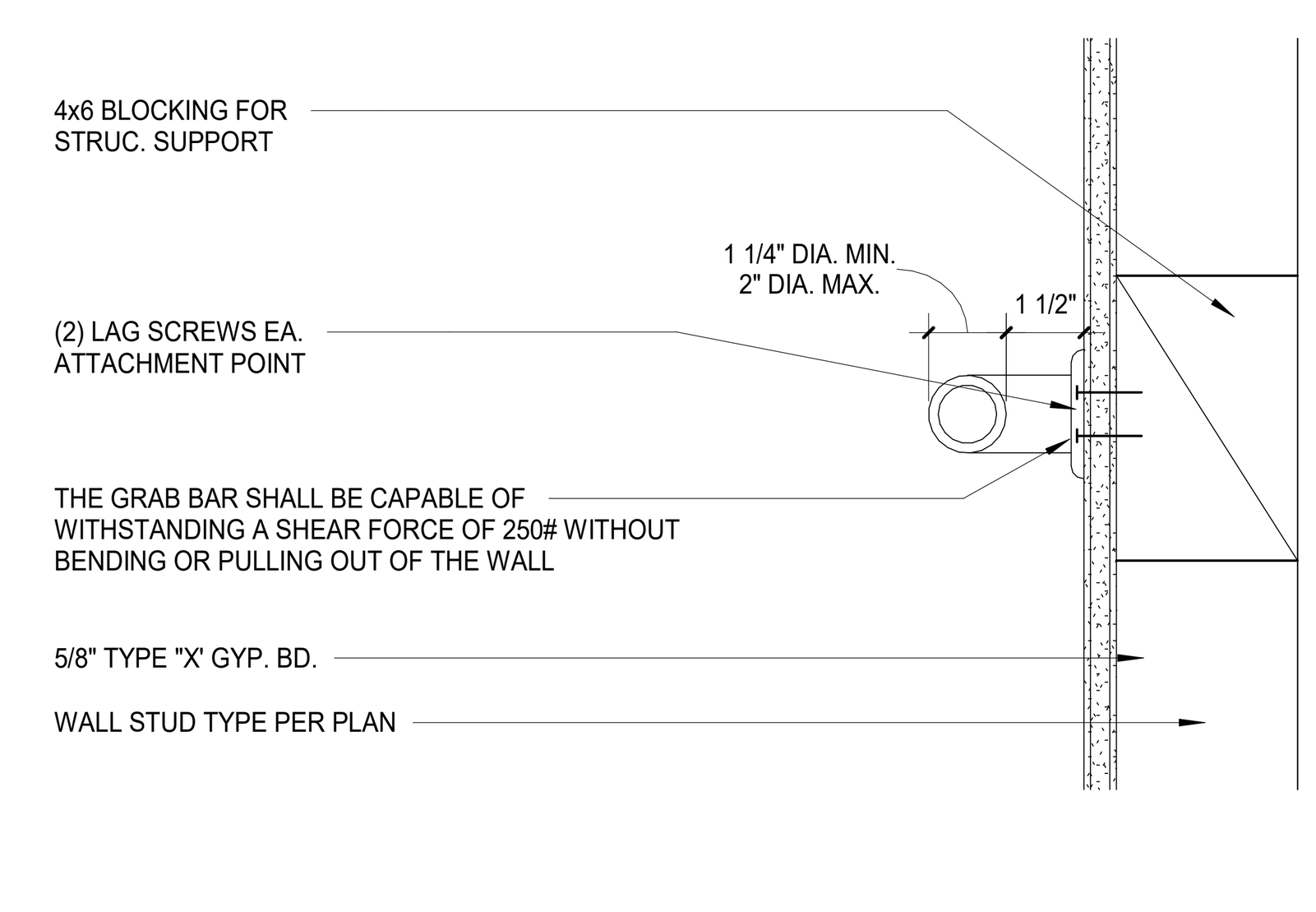

GRAB BARS | 3" = 1'-0" | 3

H. LOCATE TOWEL, SANITARY NAPKIN, AND WASTE RECEPTACLES WITH ALL OPERABLE PARTS NOT MORE THAN 40 INCHES FROM THE FLOOR.

I. LOCATE TOILET TISSUE DISPENSERS ON THE WALL OR PARTITION WITH CENTERLINE BETWEEN 7 AND 9 INCHES FROM THE FRONT EDGE OF THE TOILET.

J. GRAB BARS, TUB AND SHOWER SEATS, FASTENERS AND MOUNTING DEVICES SHALL BE DESIGNED FOR 250 LB. PER LINEAR FOOT LOAD.

K. GRAB BARS (REFER DETAIL 4/GEN-4):

1) THE DIAMETER OR WIDTH OF THE GRIPPING SURFACE OF A GRAB BAR SHALL BE 1-1/4" TO 1-1/2" OR THE SHAPE SHALL PROVIDE EQUIVALENT GRIPPING SURFACE.
2) IF THE GRAB BARS ARE MOUNTED ADJACENT TO A WALL, THE SPACE BETWEEN THE WALL AND GRAB BARS SHALL BE 1-1/2".
3) A GRAB BAR AND ANY WALL OR OTHER SURFACE ADJACENT SHALL BE FREE OF ANY SHARP OR ABRASIVE ELEMENTS.
4) GRAB BARS SHALL NOT ROTATE WITHIN THEIR FITTINGS.
5) EDGES SHALL HAVE A MINIMUM RADIUS OF 1/8".

L. THERE SHALL BE NO SHARP OR ABRASIVE SURFACES UNDER LAVATORIES.

4. **DRINKING FOUNTAINS:** (REFER TO DETAIL 7/GEN-4)

A. ON ANY FLOOR WHERE DRINKING FOUNTAINS ARE PROVIDED, AT LEAST ONE FOUNTAIN SHALL BE ACCESSIBLE. SPECIFY ACCESSIBLE DRINKING FOUNTAINS AND SHOW THEM INSTALLED IN ALCOVES OR IN A LOCATION WHICH DOES NOT ENCROACH INTO A PEDESTRIAN WAY. PROVIDE AT LEAST ONE SET OF DRINKING FOUNTAINS IN EACH "DRINKING FOUNTAIN AREA" WHERE ONE FOUNTAIN IS ACCESSIBLE TO INDIVIDUALS IN WHEELCHAIRS PLUS ONE WHICH IS ACCESSIBLE TO INDIVIDUALS WHO HAVE DIFFICULTY BENDING OR STOOPING.

B. THE DRINKING FOUNTAIN SHALL BE A MINIMUM OF 18 INCHES IN DEPTH AND THERE SHALL BE A CLEAR AND UNOBSTRUCTED KNEE SPACE UNDER THE DRINKING FOUNTAIN NOT LESS THAN 27 INCHES IN HEIGHT AND 8 INCHES IN DEPTH, THE DEPTH MEASUREMENT BEING TAKEN FROM THE FRONT EDGE OF THE FOUNTAIN. ADDITIONALLY THERE SHALL BE TOE CLEARANCE OF 9 INCHES IN HEIGHT ABOVE THE FLOOR, AND 17 INCHES IN DEPTH FROM THE FRONT EDGE OF THE FOUNTAIN. A SIDE APPROACH DRINKING FOUNTAIN IS NOT ACCEPTABLE.

C. THE BUBBLER SHALL BE ACTIVATED BY A CONTROL WHICH IS EASILY OPERATED BY A PERSON WITH DISABILITY SUCH AS A HAND-OPERATED LEVER TYPE LOCATED WITHIN 6 INCHES OF THE FRONT OF THE DRINKING FOUNTAIN. THE BUBBLER OUTLET ORIFICE SHALL BE LOCATED WITHIN 6 INCHES OF THE FRONT OF THE DRINKING FOUNTAIN AND SHALL BE WITHIN 36 INCHES OF THE FLOOR. THE WATER STREAM FROM THE BUBBLER SHALL BE SUBSTANTIALLY PARALLEL TO THE FRONT EDGE OF THE DRINKING FOUNTAIN. THE SPOUT SHALL PROVIDE A FLOW OF WATER THAT IS AT LEAST 4 INCHES HIGH SO AS TO ALLOW THE INSERTION OF A CUP OR GLASS UNDER THE FLOW OF WATER. THE FORCE REQUIRED TO ACTIVATE THE CONTROLS SHALL BE NO GREATER THAN 5 LB.

5. **NOT USED.**

6. **SWITCHES, CONTROLS AND ELECTRICAL OUTLETS:** (REFER TO DETAIL 5/GEN-4)

A. THE BOTTOM OF RECEPTACLE OUTLETS SHALL BE NOT LESS THAN 15 INCHES ABOVE THE FLOOR OR WORKING PLATFORM.

B. THE TOP OF THE OUTLET BOX OF SWITCHES INTENDED TO BE USED BY THE OCCUPANT OF THE ROOM OR AREA TO CONTROL LIGHTING AND RECEPTACLE OUTLETS, APPLIANCES, OR COOLING, HEATING AND VENTILATING EQUIPMENT, SHALL BE NOT LESS THAN 3 FEET NOR MORE THAN 4 FEET ABOVE THE FLOOR OR WORKING PLATFORM.

C. IF REACH IS OVER AN OBSTRUCTION (FOR EXAMPLE, A BASE CABINET) BETWEEN 20" AND 25" IN DEPTH, THE MAXIMUM HEIGHT IS REDUCED TO 44" FOR FORWARD APPROACH, OR 46" FOR SIDE APPROACH PROVIDED THE OBSTRUCTION IS NO MORE THAN 24" IN DEPTH. THE OBSTRUCTION MAY NOT EXTEND MORE THAN 25" FROM THE WALL BENEATH THE CONTROL.

D. THE TOP OF OPERABLE PART OF THE FIRE ALARM INITIATING DEVICES (BOXES) SHALL BE LOCATED 48" ABOVE THE LEVEL OF THE FLOOR, WORKING PLATFORM, GROUND SURFACE, OR SIDEWALK.

E. IF EMERGENCY WARNING SYSTEMS ARE REQUIRED THEY SHALL ACTIVATE A MEANS OF WARNING THE HEARING IMPAIRED. FLASHING VISUAL WARNING SHALL HAVE A FREQUENCY OF NOT MORE THAN 60 FLASHES PER MINUTE.

7. **ADDITIONAL COMPLIANCE REQUIREMENTS:**

A. COUNTERTOPS AND WORK SURFACES SHALL BE ACCESSIBLE (HEIGHT BETWEEN 28" AND 34" AFF) W/ ACCESSIBLE CLEAR SPACE BELOW PER CBC 11B-902.1.

B. WARNING SYSTEMS SHALL COMPLY WITH NFPA 72 AND 72G (AS AMENDED BY CHAPTER 35) AND SHALL PROVIDE VISUAL ALARMS (I.E. STROBES) IN RESTROOMS, CORRIDORS, MULTI-PURPOSES ROOMS, LOBBIES, MEETING ROOMS, AND ANY OTHER COMMON USE ROOMS (CBC 1007.12).

1. **RAMPS AND STAIRWAYS**
REFER TO ACCESSIBILITY NOTES ON SHEET A00.2 AND ELSEWHERE IN THESE DRAWINGS

2. **ENTRANCES AND DOORWAYS:** (REFER TO DETAIL 3/GEN-4)

A. PRIMARY ENTRANCES TO BUILDINGS AND FACILITIES SHALL BE MADE ACCESSIBLE TO THE DISABLED.

B. RECESSED DOOR MATS SHALL BE ANCHORED TO PREVENT INTERFERENCE WITH WHEELCHAIRS.

C. ACCESSIBLE ENTRANCES SHALL BE IDENTIFIED WITH AT LEAST ONE SIGN (INTERNATIONAL SYMBOL OF ACCESSIBILITY) AND WITH ADDITIONAL DIRECTIONAL SIGNS AS REQUIRED VISIBLE FROM APPROACHING PEDESTRIAN WAYS.

D. THE FLOOR OR LANDING ON EACH SIDE OF AN ENTRANCE OR PASSAGE DOOR SHALL BE LEVEL AND CLEAR. THE LEVEL AND CLEAR AREA SHALL BE A MINIMUM 60" SQUARE IN THE DIRECTION OF THE DOOR SWING AND A MINIMUM 44" SQUARE OPPOSITE THE DIRECTION OF DOOR SWING. THE SQUARES SHALL BE MEASURED AT RIGHT ANGLES TO THE PLANE OF THE DOOR IN ITS CLOSED POSITION. SEE NOTE **E.** BELOW FOR STRIKE SIDE CLEARANCES.

E. THE WIDTH OF THE LEVEL AND CLEAR AREA ON THE SIDE TO WHICH THE DOOR SWINGS SHALL EXTEND 24" PAST THE STRIKE EDGE OF THE DOOR FOR EXTERIOR DOORS AND 18" PAST THE STRIKE EDGE FOR INTERIOR DOORS.

F. THE FLOOR OR LANDING SHALL BE NOT MORE THAN 1/2" LOWER THAN THE THRESHOLD OF THE DOORWAY. CHANGE IN LEVEL BETWEEN 1/4" AND 1/2" SHALL BE BEVELED NO GREATER THAN 1:2.

G. THE SPACE BETWEEN TWO CONSECUTIVE DOOR OPENINGS IN A VESTIBULE, SERVING OTHER THAN A REQUIRED EXIT STAIRWAY, MUST HAVE AT LEAST 48" OF CLEAR SPACE FROM ANY DOOR OPENING INTO THE VESTIBULE WHEN THE DOOR IS OPEN 90 DEGREES FROM ITS CLOSED POSITION. DOOR IN SERIES MUST SWING IN THE SAME DIRECTION OR AWAY FROM THE SPACE BETWEEN THE DOORS.

H. WHERE A PAIR OF DOORS, MANUALLY OR AUTOMATICALLY OPERATED, IS UTILIZED, AT LEAST ONE OF THE DOORS SHALL PROVIDE A CLEAR, UNOBSTRUCTED OPENING 32" WIDE W/ THE LEAF POSITIONED 90 DEGREES FROM ITS CLOSED POSITION.

I. THE BOTTOM 10" OF ALL DOORS EXCEPT AUTOMATIC AND SLIDING SHALL HAVE A SMOOTH, UNINTERRUPTED SURFACE TO ALLOW THE DOOR TO OPEN BY A WHEELCHAIR FOOTREST WITHOUT CREATING A TRAP OR HAZARDOUS CONDITION. WHERE NARROW FRAME DOORS ARE USED A 10" HIGH SMOOTH PANEL SHALL BE INSTALLED ON THE PUSH SIDE OF THE DOOR, WHICH WILL ALLOW THE DOOR TO BE OPENED BY A WHEELCHAIR FOOTREST WITHOUT CREATED A TRAP OR HAZARDOUS CONDITION.

J. MAXIMUM EFFORT TO OPERATED DOORS SHALL NOT EXCEED 5 LB. SUCH PULL OR PUSH EFFORT SHALL BE APPLIED AT RIGHT ANGLES TO HINGED DOORS AND AT THE CENTER PLANE OF SLIDING OR FOLDING DOORS. COMPENSATING DEVICES OR AUTOMATIC DOOR OPERATORS MAY BE UTILIZED TO MEET THE ABOVE STANDARDS. WHEN FIRE DOORS ARE REQUIRED, THE MAXIMUM EFFORT TO OPERATE THE DOOR MAY BE INCREASED TO THE MAXIMUM ALLOWABLE BY THE APPROPRIATE ADMINISTRATIVE AUTHORITY, NOT TO EXCEED 15 POUNDS.

3. **SANITARY FACILITIES:** (REFER TO DETAIL 2/GEN-4)

A. WATER CLOSET COMPARTMENTS SHALL BE EQUIPPED WITH A DOOR THAT HAS AN AUTOMATIC CLOSING DEVICE, AND SHALL HAVE A CLEAR UNOBSTRUCTED OPENING WIDTH OF 32" INCHES WHEN LOCATED AT THE END AND 34" INCHES WHEN LOCATED AT THE SIDE WITH THE DOOR POSITION AT AN ANGLE OF 90 DEGREES AWAY FROM ITS CLOSED POSITION.

B. TOILET FLUSH CONTROLS SHALL BE OPERABLE WITH ONE HAND, AND SHALL NOT REQUIRE TIGHT GRASPING, PINCHING, OR TWISTING OF THE WRIST. CONTROLS FOR FLUSH VALVES SHALL BE MOUNTED ON THE WIDE SIDE OF THE TOILET AREAS, NO MORE THAN 44" INCHES ABOVE THE FLOOR. THE FORCE REQUIRED TO ACTIVATE CONTROLS SHALL BE NO GREATER THAN 5 POUNDS PER FOOT.

C. WHERE URINALS ARE PROVIDED AT LEAST ONE WITH A RIM PROJECTING A MINIMUM OF 14 INCHES FROM THE WALL AND AT A MAXIMUM OF 17 INCHES ABOVE THE FLOOR SHALL BE PROVIDED.

D. URINAL FLUSH CONTROLS SHALL BE OPERABLE WITH ONE HAND, AND SHALL NOT REQUIRE TIGHT GRASPING, PINCHING, OR TWISTING OF THE WRIST AND SHALL BE MOUNTED NO MORE THAN 44" ABOVE THE FLOOR. THE FORCE REQUIRED TO ACTIVE CONTROLS SHALL BE NO GREATER THAN 5 POUNDS PER FOOT.

E. HOT WATER AND ALL DRAIN PIPES UNDER LAVATORIES SHALL BE INSULATED OR OTHERWISE COVERED.

F. FAUCET CONTROLS AND OPERATING MECHANISMS SHALL BE OPERABLE WITH ONE HAND AND SHALL NOT REQUIRE TIGHT GRASPING, PINCHING, OR TWISTING OF THE WRIST. THE FORCE REQUIRED TO ACTIVATE CONTROLS SHALL BE NO GREATER THAN 5 POUNDS PER FOOT. LEVER OPERATED, PUSH-TYPE AND ELECTRONICALLY CONTROLLED MECHANISMS ARE EXAMPLES OF ACCEPTABLE DESIGNS. SELF-CLOSING VALVES ARE ALLOWED IF THE FAUCET REMAINS OPEN FOR AT LEAST 10 SECONDS.

G. MIRRORS SHALL BE MOUNTED WITH THE LOWEST REFLECTIVE EDGE NOT MORE THAN 40 INCHES ABOVE THE FLOOR.

COMMON AREA ACCESSIBILITY NOTES | 12" = 1'-0" | 1

PREPARED BY:
SVA ARCHITECTS
6 HUTTON CENTRE DR, SUITE 1150
SANTA ANA, CA 92707
T 949.809.3380 WWW.SVA-ARCHITECTS.COM

THIS DOCUMENT CONTAINS INFORMATION PROPRIETARY TO SVA ARCHITECTS INC. AND IS FURNISHED IN CONFIDENCE FOR THE LIMITED PURPOSE OF EVALUATION, BIDDING OR REVIEW. THIS DOCUMENT OR ITS CONTENTS MAY NOT BE USED FOR ANY OTHER PURPOSE AND MAY NOT BE REPRODUCED OR DISCLOSED TO OTHERS WITHOUT THE PRIOR WRITTEN CONSENT OF SVA ARCHITECTS INC. ALL RIGHTS RESERVED, © COPYRIGHT 2018.

LICENSED ARCHITECT ROBERT M. SIMONS No. C-18301 JAN. 31, 2025 STATE OF CALIFORNIA

REVISIONS

NO.	DESCRIPTION	DATE	APPROVED
1	90% CD SUBMITTAL	12/15/2022	
2	100% CD SUBMITTAL	05/01/2023	
3	FINAL SUBMITTAL	06/30/2023	

B.M.: THE CITY OF GARDENA BENCHMARK NO. 5D-15 ELEV. = 43.508'

CITY OF GARDENA
DEPARTMENT OF PUBLIC WORKS - ENGINEERING
ACCESSIBILITY DETAILS
COMMUNITY AQUATICS & SENIOR CENTER
GEN-5

	INITIAL	DATE
DESIGNED BY	AP/EC	05/25/2022
DRAWN BY	NC	06/20/23
CHECKED BY	DB	06/29/23

APPROVED BY:
APPROVED BY: DIRECTOR OF PUBLIC WORKS
SHT. 43 OF 195 DWG. NO. 5-2606

GARDENA COMMUNITY AQUATICS AND SENIOR CENTER - CITY SUBMITTAL SET
FILE PATH: C:\Users\dbrown\Documents\Gardena_Community Pool and Senior Center_dbrown@sva-architects.com.rvt
PLOT TIME: 10/12/2023 10:31:47 AM

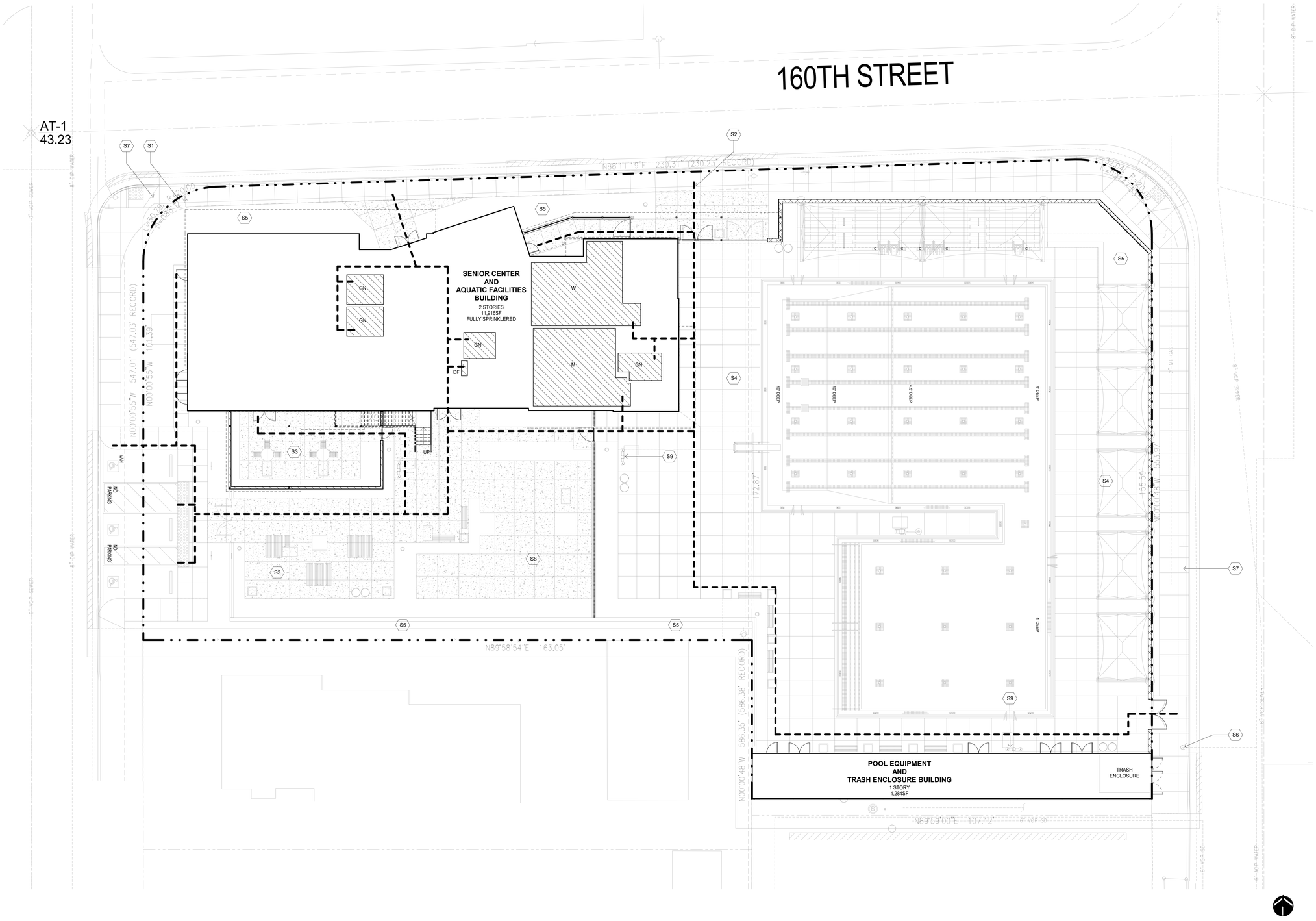

S1 PROPERTY LINE

S2 PATH OF TRAVEL

S3 HARDSCAPE AREA WITH PICNIC TABLES - SEE LANDSCAPE & CIVIL PLANS

S4 POOL AND POOL DECK AREA WITH BLEACHERS AND SHADE CANPOIES - SEE LANDSCAPE, CIVIL, AND POOL PLANS

S5 LANDSCAPE AREA - SEE LANDSCAPE PLANS

S6 EXISTING FIRE HYDRANT TO REMAIN

S7 PUBLIC WAY

S8 EXTERIOR EXERCISE AREA WITH EQUIPMENT - SEE LANDSCAPE PLANS

S9 HIGH-LOW DRINKING FOUNTAIN WITH BOTTLE FILLER - SEE PLUMBING PLANS

SITE PLAN KEYNOTES

PATH OF TRAVEL
PATH OF TRAVEL (P.O.T) AS INDICATED MEETS THE FOLLOWING REQUIREMENTS:
1. IS A BARRIER-FREE ACCESSIBLE ROUTE WITHOUT ANY ABRUPT LEVEL CHANGES EXCEEDING 1/2" BEVELED AT A SLOPE NOT STEEPER THAN 1:2 EXCEPT THAT LEVEL CHANGES ARE 1/4" MAX VERTICAL & IS AT LEAST 48" WIDE.
2. SURFACE SHALL BE STABLE, FIRM AND SLIP RESISTANT.
3. CROSS-SLOPE SHALL NOT BE STEEPER THAN 1:48 AND RUNNING SLOPE SHALL NOT BE STEEPER THAN 1:20 UNLESS OTHERWISE INDICATED (SEC 11B-403.3)
4. P.O.T. SHALL BE MAINTAINED FREE OF OVERHANGING OBSTRUCTIONS TO 80" MINIMUM (SECTION 11B-307.4) AND PROTRUDING OBJECTS GREATER THAN 4" PROJECTION FROM WALL SURFACE BETWEEN 27" AND 80" ABOVE FINISH FLOOR OR GROUND (SECTION 11B-307.2).
5. PROVIDE FLUSH TRANSITIONS AT ANY ADJOINING JOINTS BETWEEN DIFFERENT WALK SURFACES IN P.O.T.

DESIGN PROFESSIONAL IN GENERAL RESPONSIBLE CHARGE STATEMENT:
THE P.O.T. IDENTIFIED IN THESE CONSTRUCTION DOCUMENTS IN COMPLIANT WITH THE CURRENT APPLICABLE CALIFORNIA BUILDING CODE ACCESSIBILITY PROVISIONS FOR **PATH OF TRAVEL REQUIREMENTS FOR ALTERATIONS, ADDITIONS AND STRUCTURAL REPAIRS.** AS PART OF THE DESIGN OF THIS PROJECT, THE POT WAS EXAMINED AND ANY ELEMENTS, COMPONENTS OR PORTIONS OF THE P.O.T. THAT WERE DETERMINED TO BE NONCOMPLIANT 1) HAVE BEEN IDENTIFIED AND 2) THE CORRECTIVE WORK NECESSARY TO BRING THEM INTO COMPLIANCE HAS BEEN INCLUDED WITHIN THE SCOPE OF THIS PROJECT'S WORK THROUGH DETAILS, DRAWINGS AND SPECIFICATIONS INCORPORATED INTO THESE CONSTRUCTION DOCUMENTS. ANY NONCOMPLIANT ELEMENTS, COMPONENTS OR PORTIONS OF THE POT THAT WILL NOT BE CORRECTED BY THIS PROJECT BASED UPON THE VALUATION THRESHOLD OR A FINDING OF UNREASONABLE HARDSHIP ARE SO INDICATED IN THESE CONSTRUCTION DOCUMENTS.

DURING CONSTRUCTION, IF P.O.T. ITEMS WITHIN THE SCOPE OF THE PROJECT REPRESENTED AS CODE COMPLIANT ARE FOUND TO BE NONCONFORMING BEYOND REASONABLE CONSTRUCTION TOLERANCES, THEY SHALL BE BROUGHT INTO COMPLIANCE WITH THE CBC AS PART OF THIS PROJECT BY MEANS OF A CONSTRUCTION CHANGE DOCUMENT.

PROPERTY LINE

CONCRETE SIDEWALK

ACCESSIBLE RESTROOMS FACILITIES

SITE PLAN | 3/32" = 1'-0" | 1 | **SITE PLAN LEGEND**

PREPARED BY:
SVA ARCHITECTS
6 HUTTON CENTRE DR, SUITE 1150
SANTA ANA, CA 92707
T 949.809.3380 WWW.SVA-ARCHITECTS.COM

THIS DOCUMENT CONTAINS INFORMATION PROPRIETARY TO SVA ARCHITECTS INC. IT IS TO BE USED BY OTHERS ONLY FOR THE LIMITED PURPOSE OF EVALUATION, BIDDING OR REVIEW. THIS DOCUMENT OR ITS CONTENTS MAY NOT BE USED FOR ANY OTHER PURPOSE AND MAY NOT BE REPRODUCED OR DISCLOSED TO OTHERS WITHOUT THE PRIOR WRITTEN CONSENT OF SVA ARCHITECTS INC. ALL RIGHTS RESERVED, © COPYRIGHT 2018.

LICENSED ARCHITECT ROBERT M. SIMPSON No. C-17651 JAN. 31, 2025 STATE OF CALIFORNIA

B.M.: THE CITY OF GARDENA BENCHMARK NO. SD-15 ELEV. = 43.508'

REVISIONS

NO.	DESCRIPTION	DATE	APPROVED
1	90% CD SUBMITTAL	12/15/2022	
2	100% CD SUBMITTAL	05/01/2023	
3	FINAL SUBMITTAL	06/30/2023	

CITY OF GARDENA
DEPARTMENT OF PUBLIC WORKS - ENGINEERING

SITE PLAN

COMMUNITY AQUATICS & SENIOR CENTER

A1.0

	INITIAL	DATE
DESIGNED BY	AP/EC	05/25/2022
DRAWN BY	NC	06/20/23
CHECKED BY	DB	06/29/23

APPROVED BY:

APPROVED BY: DIRECTOR OF PUBLIC WORKS

SHT. 44 OF 195 DWG. NO. 5-2606

CARDENA COMMUNITY AQUATICS AND SENIOR CENTER - CITY SUBMITTAL SET

PLOT DATE: 12/13/2023 9:37:24 AM
PLOT BY: Nicholas Cruz
FILE NAME: C:\Users\ncruz\Documents\Gardena_Community Pool and Senior Center_dbrownlow-sva-architects-com.rvt

FIRE MASER PLAN NOTES

1. APPROVED BUILDING ADDRESS NUMBERS, BUILDING NUMBERS OR APPROVED BUILDING IDENTIFICATION SHALL BE PROVIDED AND MAINTAINED SO AS TO BE PLAINLY VISIBLE AND LEGIBLE FROM THE STREET FRONTING THE PROPERTY. THE NUMBERS SHALL CONTRAST WITH THEIR BACKGROUND, BE ARABIC NUMERALS OR ALPHABET LETTERS, AND BE A MINIMUM OF 4 INCHES HIGH WITH A MINIMUM STROKE WIDTH OF 0.5 INCH. FIRE CODE 505.1

2. AN APPROVED KEY BOX, LISTED IN ACCORDANCE WITH UL 1037 SHALL BE PROVIDED AS REQUIRED BY FIRE CODE 506. THE LOCATION OF EACH KEY BOX SHALL BE DETERMINED BY THE FIRE INSPECTOR.

3. PROVIDE AN APPROVED AUTOMATIC FIRE SPRINKLER SYSTEM IN ACCORDANCE WITH PROVISIOINS SET FORTH IN BUILDING CODE SECTION 903.3. REASON: NFPA 13 FIRE SPRINKLER PLANS SHALL BE SUBMITTED TO THE SPRINKLER PLAN CHECK UNIT FOR REVIEW AND APPROVAL PRIOR TO INSTALLATION IN ACCORDANCE WITH FIRE CODE 901.2.

4. PORTABLE FIRE EXTINGUISHERS SHALL BE INSTALLED AND MAINTAINED ALL OCCUPANCY GROUPS AND AT SUCH LOCATIONS AS REQUIRED BY FIRE CODE 906 AND CALIFORNIA CODE OF REGULATIONS, TITLE 19, DIVISION 1, CHAPTER 3. THE FINAL NUMBER AND LOCATION OF ALL EXTINGUISHERS SHALL BE DETERMINED BY THE LOCAL AREA FIRE INSPECTOR.

5. ALL ELEVATORS SHALL BE EQUIPPED TO OPERATE WITH A STANDARDIZED FIRE SERVICE ELEVATOR KEY IN ACCORDANCE WITH FIRE CODE 606.8. BUILDING CODE 3003.3

6. DUMPSTERS AND CONTAINERS WITH AN INDIVIDUAL CAPACITY OF 1.5 CUBIV YARDS OR MORE SHALL NOT BE STORED IN BUILDINGS OR PLACED WITHIN 5 FEET OF COMBUSTIBLE WALLS, OPENINGS OR COMBUSTIBLE ROOF EAVES, UNLESS AREAS CONTAIN DUMPSTERS OR CONTAINERS OR CONTAINERS ARE PROTECTED BY AN APPROVED AUTOMATIC FIRE SPRINKLER SYSTEM. FIRE CODE 304.3.3.

7. CURTAIN, DRAPERIES, FABRIC HANGINGS AND SIMILAR COMBUSTIBLE DECORATIVE MATERIALS SUSPENDED FROM WALLS OR CEILINGS SHALL MEET THE FLAME PROPAGATION PERFORMANCE CRITERIA OF NFPA 701.

8. FIRE DEPARTMENT CONNECTIONS SHALL BE LOCATED ON THE STREET-ADDRESS SIDE OF BUILDINGS, FACING APPROVED FIRE APPARATUS ACCESS ROADS, WITHIN 150 FEET (VIA VEHICULAR ACCESS) OF AN ACCESSIBLE PUBLIC FIRE HYDRANT, AND AS CLOSE TO THE STREET CURB FACE AS POSSIBLE, FULLY VISIBLE, AND RECOGNIZABLE FROM THE STREET, FIRE APPARATUS ACCESS ROAD OR NEAREST POINT OF FIRE DEPARTMENT VEHICLE ACCESS OR AS OTHERWISE APPROVED BY THE FIRE CODE OFFICIAL. FIRE DEPARTMENT CONNECTIONS SHALL BE LOCATED A MINIMUM OF 25 FEET (7,620 MM) FROM THE STRUCTURE. WHEN THIS DISTANCE CANNOT BE ACHIEVED, A MINIMUM TWO-HOUR, FIRE-RESISTIVE WALL SHALL BE PROVIDED FOR THE STRUCTURE WITH NO OPENINGS IN THE WALL, FOR 25 FEET (7,620 MM) IN EITHER DIRECTION FROM THE FIRE DEPARTMENT CONNECTION. THE REQUIRED FIRE-RESISTIVE CONSTRUCTION AND LACK OF OPENINGS SHALL EXTEND FOR THE FULL HEIGHT OF THE WALL OR BUILDING AS DETERMINED BY THE FIRE CODE OFFICIAL. THE FIRE CODE OFFICIAL MAY ALLOW SUFFICIENTLY PROTECTED OVERHEAD OPENINGS. FIRE DEPARTMENT CONNECTIONS SHALL BE LOCATED NOT LESS THAN 24 INCHES (609.6 MM) NORMORE THAN 42 INCHES (1,066.8 MM) ABOVE GRADE. FIRE CODE 912.2.1.

9. THE MEANS OF EGRESS TRAVEL, INCLUDING THE EXIT DISCHARGE, SHALL BE ILLUMINATED AT ALL TIMES THE BUILDING SPACE SERVED BY THE MEANS OF EGRESS IS OCCUPIED WITH A LIGHT INTENSITY OF NOT LESS THAN 1 FOOT-CANDLE AT THE WALKING SURFACE AS REQUIRED BY BUILDING CODE 1008.2.

10. IN THE EVENT OF POWER SUPPLY FAILURE IN ROOMS, SPACES AND BUILDINGS THAT REQUIRE TWO OR MORE MEANS OF EGRESS, AN EMERGENCY ELECTRICAL SYSTEM FOR A DURATION OF NOT LESS THAN 90 MINUTES IN ACCORDANCE WITH THE PROVISIONS SET FORTH IN BUILDING CODE 1008.3.

11. EGRESS DOORS SHALL BE READILY OPENABLE FROM THE EGRESS SIDE WITHOUT THE USE OF A KEY OR ANY SPECIAL KNOWLEDGE OR EFFORT IN ACCORDANCE WITH BUILDING CODE 1010.1.19.

12. EXIT SIGNS SHALL BE ILLUMINATED AT ALL TIMES. TO ENSURE CONTINUED ILLUMINATION FOR A DURATION OF NOT LESS 90 MINUTES IN CASE OF PRIMARY POWER LOSS, THE SIGN ILLUMINATION MEANS SHALL BE CONNECTED TO AN EMERGENCY POWER SYSTEM PROVIDED FROM STORAGE BATTERIES, UNIT EQUIPMENT OR AN ON-SITE GENERATOR.

13. THE MEANS OF EGRESS TRAVEL SHALL BE ILLUMINATED AT ANY TIME THE BUILDING IS OCCUPIED WITH A LIGHT INTENSITY OF NOT LESS THAN 1 FOOT-CANDLE AT THE FLOOR LEVEL. BUILDING CODE 1008.2.1.

14. THE PATH OF EGRESS TRAVEL TO EXITS SHALL BE MARKED BY READILY VISIBLE EXIT SIGNS TO CLEARLY INDICATE THE DIRECTION OF EGRESS TRAVEL AS REQUIRED BY BUILDING CODE 1013.1; AND SHALL BE INTERNALLY OR EXTERNALLY ILLUMINATED AS REQUIRED BY SECTION 1013.3 AND 1013.5. NOTE: ADDITIONAL EXIT SIGNS MAY BE REQUIRED AT THE TIME OF FIELD INSPECTION

15. EACH DOOR IN A MEANS OF EGRESS FROM A GROUP A, OR ASSEMBLY AREA NOT CLASSIFIED AS AN ASSEMBLY OCCUPANCY, HAVING AN OCCUPANT LOAD OF 50 OR MORE SHALL NOT BE PROVIDED WITH A LATCH OR LOCK UNLESS IT IS PANIC HARDWARE OF FIRE EXIT HARDWARE. PROVIDE APPROVED PANIC HARDWARE ON REQUIRED EXIT DOORS, TITLE, 24 SECTIONS 1010.1.10.

16. THE MAXIMUM OCCUPANT LOAD FOR AN ASSEMBLY USE SHALL NOT EXCEED THE OCCUPANT LOAD AS DETERMINED IN ACCORDANCE WITH TITLE 24 SECTION 1004.1, TABLE 1004.1.1.

17. COMPLY WITH POSTING OF ROOM CAPACITY. FIRE CODE 1004.3 TITLE 24, SECTION 1004.3. (SUBJECT TO FIELD INSPECTION APPROVAL).

18. BLEACHERS, GRANDSTANDS, SHALL COMPLY WITH SECTION 1029.1.1 CBC AND ICC 300.

19. ALL ELEVATORS SHALL BE EQUIPPED TO OPERATE WITH A STANDARDIZED FIRE SERVICE ELEVATOR KEY IN ACCORDANCE WITH FIRE CODE 606.8. BUILDING CODE 3003.3

20. FIRE DEPARTMENT CONNECTIONS SHALL BE LOCATED ON THE STREET-ADDRESS SIDE OF BUILDINGS, FACING APPROVED FIRE APPARATUS ACCESS ROADS, WITHIN 150 FEET (VIA VEHICULAR ACCESS) OF AN ACCESSIBLE PUBLIC FIRE HYDRANT, AND AS CLOSE TO THE STREET CURB FACE AS POSSIBLE, FULLY VISIBLE, AND RECOGNIZABLE FROM THE STREET, FIRE APPARATUS ACCESS ROAD OR NEAREST POINT OF FIRE DEPARTMENT VEHICLE ACCESS OR AS OTHERWISE APPROVED BY THE FIRE CODE OFFICIAL. FIRE DEPARTMENT CONNECTIONS SHALL BE LOCATED A MINIMUM OF 25 FEET (7,620 MM) FROM THE STRUCTURE. WHEN THIS DISTANCE CANNOT BE ACHIEVED, A MINIMUM TWO-HOUR, FIRE-RESISTIVE WALL SHALL BE PROVIDED FOR THE STRUCTURE WITH NO OPENINGS IN THE WALL, FOR 25 FEET (7,620 MM) IN EITHER DIRECTION FROM THE FIRE DEPARTMENT CONNECTION. THE REQUIRED FIRE-RESISTIVE CONSTRUCTION AND LACK OF OPENINGS SHALL EXTEND FOR THE FULL HEIGHT OF THE WALL OR BUILDING AS DETERMINED BY THE FIRE CODE OFFICIAL. THE FIRE CODE OFFICIAL MAY ALLOW SUFFICIENTLY PROTECTED OVERHEAD OPENINGS. FIRE DEPARTMENT CONNECTIONS SHALL BE LOCATED NOT LESS THAN 24 INCHES (609.6 MM) NORMORE THAN 42 INCHES (1,066.8 MM) ABOVE GRADE. FIRE CODE 912.2.1

21. ALL FIRE HYDRANTS SHALL MEASURE 6" X 4" X 2-1/2", BRASS OR BRONZE, CONFORMING TO AMERICAN WATER WORKS ASSOCIATION STANDARD C503, OR APPROVED EQUAL.

22. ALL REQUIRED PUBLIC FIRE HYDRANTS SHALL BE INSTALLED, TESTED AND ACCEPTED PRIOR TO BEGINNING CONSTRUCTION. FIRE CODE 501.4.

23. PROVIDE AN APPROVED MANUAL FIRE OR AUTOMATIC SMOKE DETECTION SYSTEM IN ACCORDANCE WITH THE PROVISIONS SET FORTH IN FIRE CODE 907. REASON: FIRE CODE 907.2.1 FIRE ALARM AND SMOKE DETECTION PLANS SHALL BE SUBMITTED TO THE FIRE ALARM PLAN CHECK UNIT FOR REVIEW AND APPROVAL PRIOR TO INSTALLATION IN ACCORDANCE WITH FIRE CODE 901.2.

24. ELEVATORS SHALL BE PROVIDED WITH PHASE I EMERGENCY RECALL OPERATION AND PHASE II EMERGENCY IN-CAR OPERATION IN ACCORDANCE WITH CALIFORNIA CODE OF REGULATIONS, TITLE 8, DIVISION 1, CHAPTER 4, SUBCHAPTER 6, ELEVATOR SAFETY ORDERS. BUILDING CODE 3003.2

25. ALL NEW BUILDINGS SHALL HAVE APPROVED RADIO COVERAGE FOR EMERGENCY RESPONDERS WITHIN THE BUILDING BASED UPON THE EXISTING COVERAGE LEVELS OF THE PUBLIC SAFETY COMMUNICATION SYSTEMS OF THE JURISDICTION, MEASURED AT THE EXTERIOR OF THE BUILDING IN ACCORDANCE WITH FIRE CODE 510. NEW BUILDINGS THAT CAN DEMONSTRATE MINIMUM RADIO COVERAGE SIGNAL STRENGTH THROUGHOUT THE INTERIOR OF THE BUILDING MAY BE EXEMPT PER FIRE CODE 510. WHEN AN APPROVED EMERGENCY RESPONDER RADIO COVERAGE SYSTEM IS PROVIDED, PLANS SHALL BE SUBMITTED TO THE FIRE ALARM PLAN CHECK UNIT FOR REVIEW AND APPROVAL PRIOR TO INSTALLATION. FIRE CODE 510.5.1.

26. THE KITCHEN IN THIS PROJECT IS NOT A COMMERCIAL KITCHEN. FOR A COMMERCIAL KITCHEN: EACH REQUIRED COMMERCIAL KITCHEN EXHAUST HOOD AND DUCT SYSTEM SHALL HAVE A TYPE I HOOD PROTECTED WITH AN APPROVED AUTOMATIC FIRE-EXTINGUISHING SYSTEM INSTALLED IN ACCORDANCE WITH BUILDING CODE 904.2.1. FIRE CODE 609

27. INTERIOR WALL AND CEILING FINISHES SHALL BE CLASSIFIED IN ACCORDANCE WITH BUILDING CODE 803 AND TABLE 803.9. FIRE CODE SEC. 803 TABLE 803.3

THE REQUIRED FIRE FLOW IS BASED ON THE FOLLOWING CALCULATION

TYPE OF CONSTRUCTION PER THE BUILDING CODE: TYPE IIIB
FIRE-FLOW CALCULATION AREA: 11,916 SQ.FT.
FIRE FLOW BASED ON THE FIRE-FLOW CALCULATION AREA: 2,250 GPM
REDUCTION FOR FIRE SPRINKLERS (MAXIMUM 50%): 1,250 GPM
TOTAL FIRE FLOW REQUIRED: 1,500 GPM

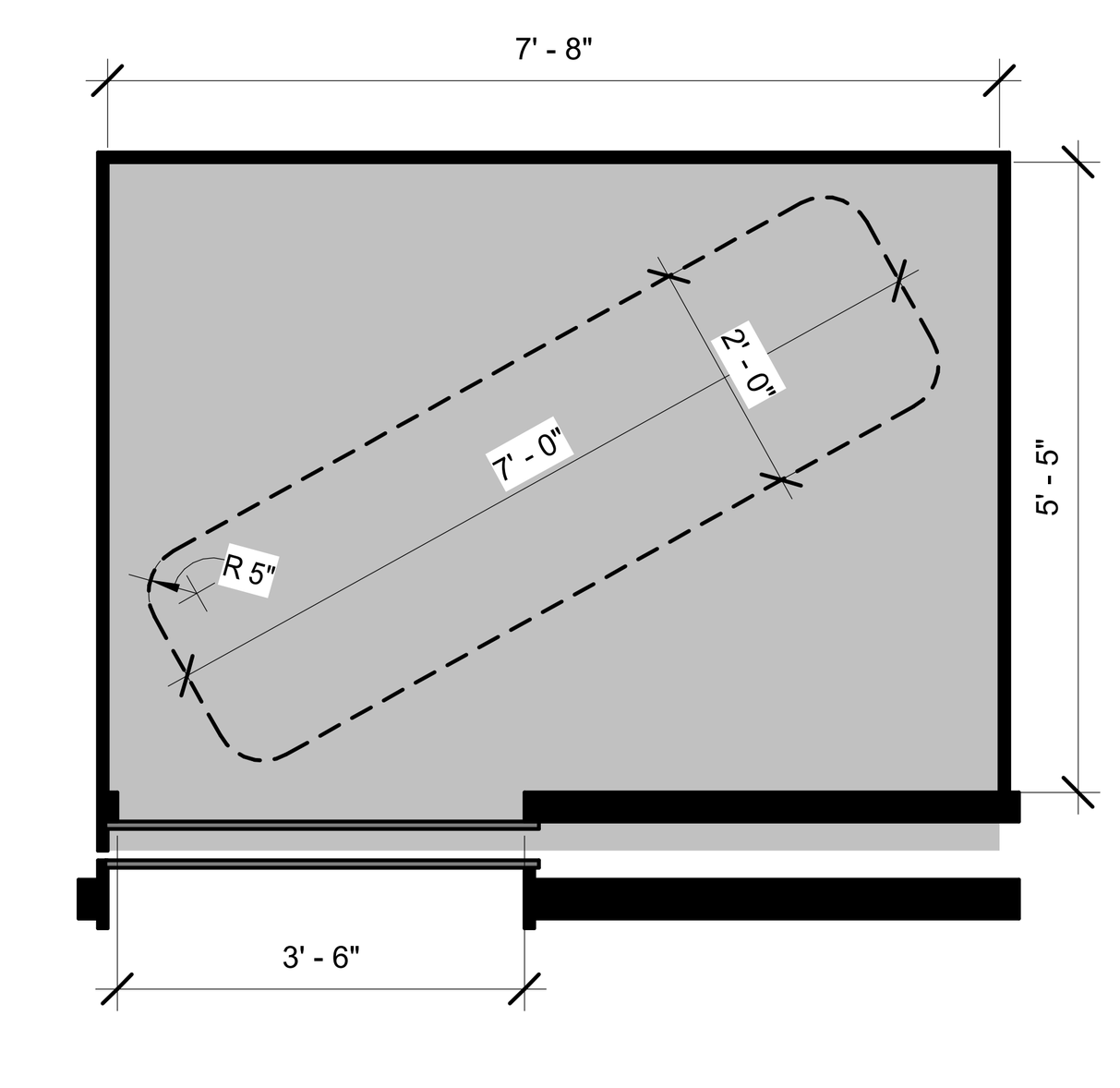

ELEVATOR CAB DETAIL

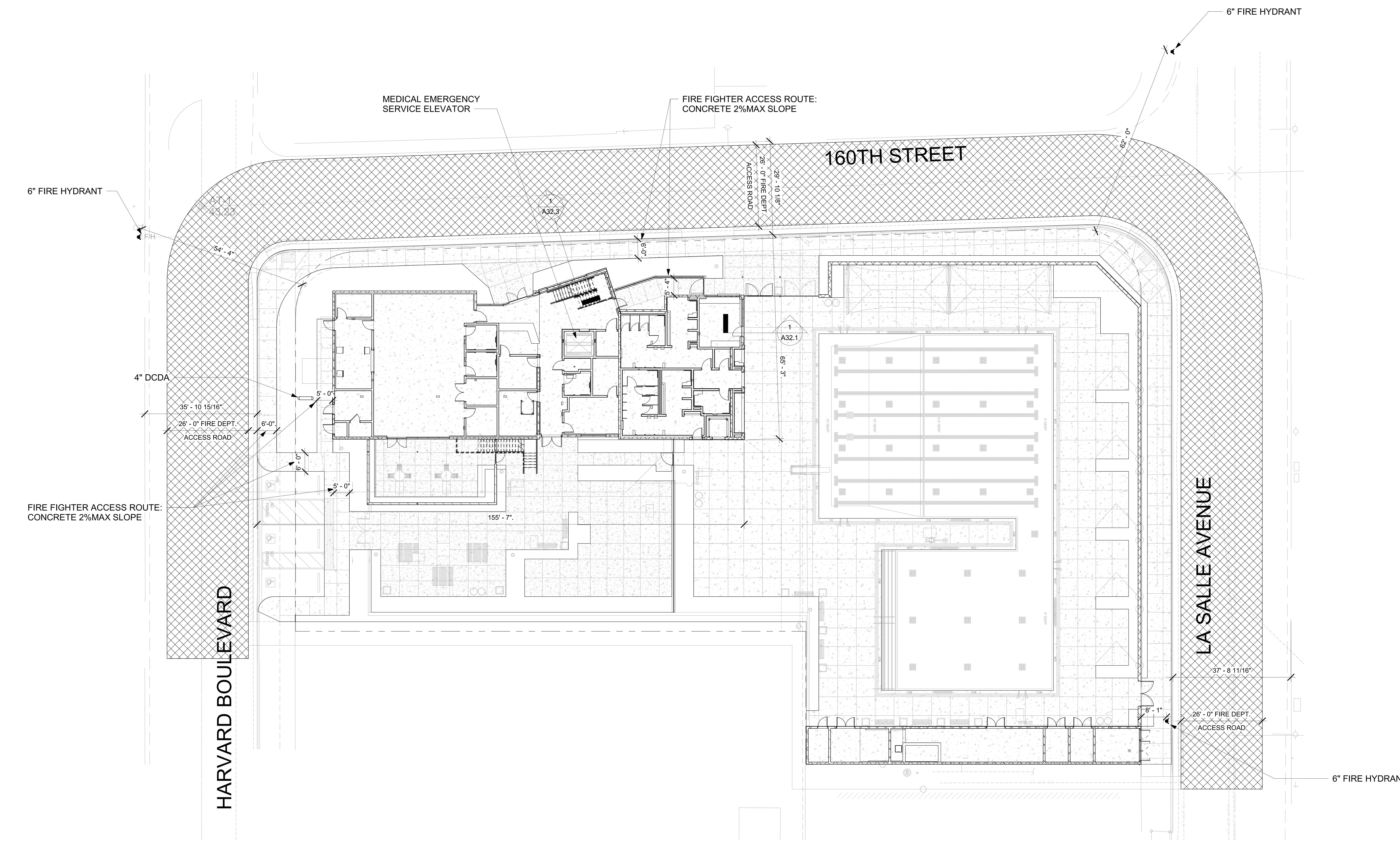

FIRE MASTER PLAN 1/16" = 1'-0" 1

PREPARED BY:

SVA ARCHITECTS
6 HUTTON CENTRE DR, SUITE 1150
SANTA ANA, CA 92707
T 949.809.3380 WWW.SVA-ARCHITECTS.COM

THIS DOCUMENT CONTAINS INFORMATION PROPRIETARY TO SVA ARCHITECTS INC. AND IS FURNISHED IN CONFIDENCE FOR THE LIMITED PURPOSE OF EVALUATION, BIDDING OR REVIEW. THIS DOCUMENT OR ITS CONTENTS MAY NOT BE USED FOR ANY OTHER PURPOSE AND MAY NOT BE REPRODUCED OR DISCLOSED TO OTHERS WITHOUT THE PRIOR WRITTEN CONSENT OF SVA ARCHITECTS INC. ALL RIGHTS RESERVED, © COPYRIGHT 2018.

LICENSED ARCHITECT ROBERT M. SIMONS No. C-18301 JAN. 31, 2025 STATE OF CALIFORNIA

REVISIONS

NO.	DESCRIPTION	DATE	APPROVED
1	90% CD SUBMITTAL	12/15/2022	
2	100% CD SUBMITTAL	05/01/2023	
3	FINAL SUBMITTAL	06/30/2023	

B.M.: THE CITY OF GARDENA BENCHMARK NO. 5D-15 ELEV. = 43.508'

CITY OF GARDENA
DEPARTMENT OF PUBLIC WORKS - ENGINEERING
FIRE MASTER PLAN
COMMUNITY AQUATICS & SENIOR CENTER
A1.1

	INITIAL	DATE
DESIGNED BY	AP/EC	05/25/2022
DRAWN BY	NC	06/20/23
CHECKED BY	DB	06/29/23

APPROVED BY:
APPROVED BY: DIRECTOR OF PUBLIC WORKS

SHT. 45 OF 195 DWG. NO. 5-2606

GARDENA COMMUNITY AQUATICS AND SENIOR CENTER – CITY SUBMITTAL SET

FILE PATH: C:\Users\dbrown\Documents\Gardena_Community Pool and Senior Center_dbrown@sva-architects.com.rvt
PLOT TIME: 10/12/2023 10:29:26 AM

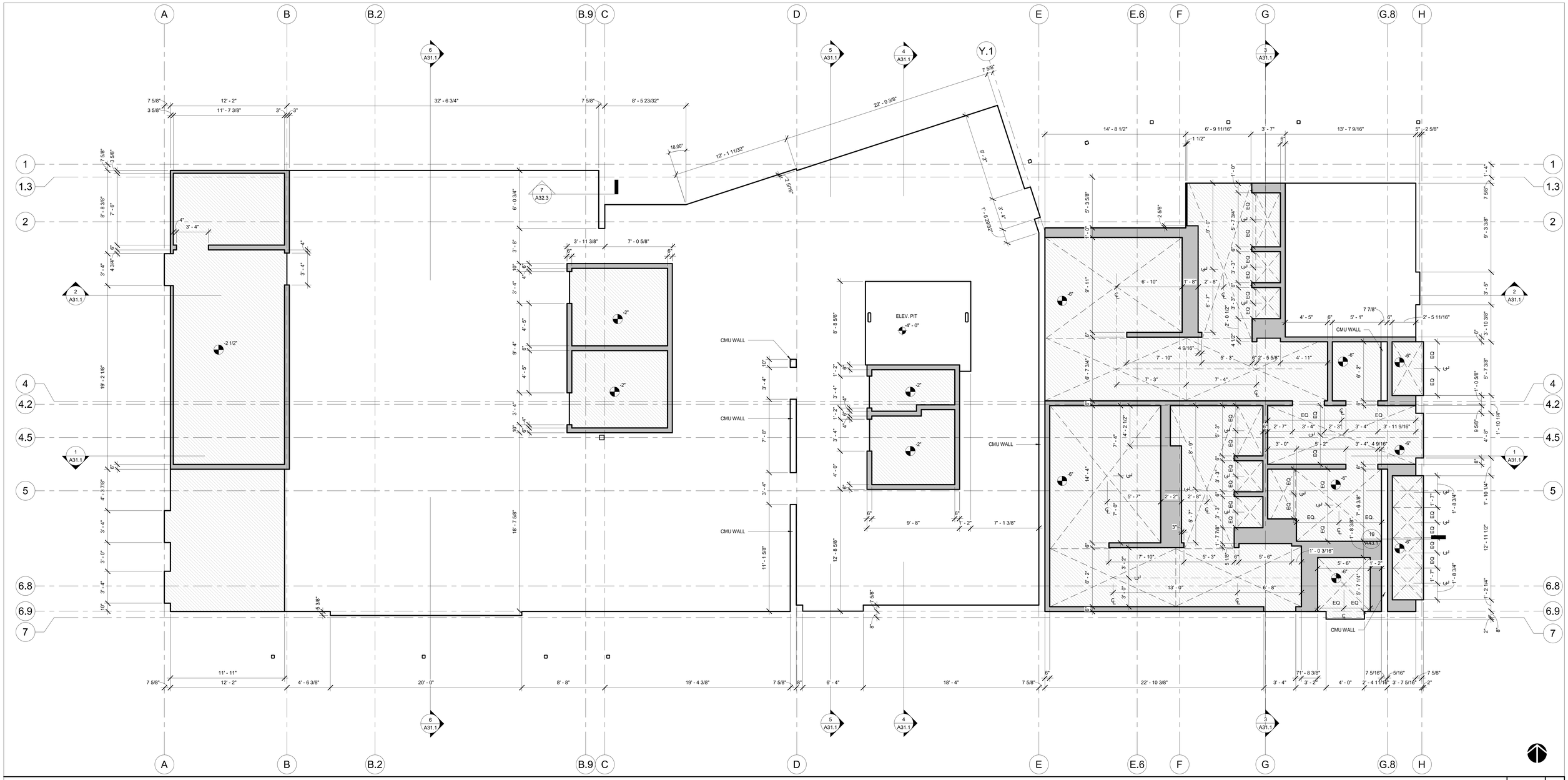

SLAB PLAN 1/4" = 1'-0" **1**

PREPARED BY:
SVA ARCHITECTS
6 HUTTON CENTRE DR, SUITE 1150
SANTA ANA, CA 92707
T 949.809.3380 WWW.SVA-ARCHITECTS.COM

THIS DOCUMENT CONTAINS INFORMATION PROPRIETARY TO SVA ARCHITECTS INC. AND IS FURNISHED IN CONFIDENCE FOR THE LIMITED PURPOSE OF EVALUATION, BIDDING OR REVIEW. THIS DOCUMENT OR ITS CONTENTS MAY NOT BE USED FOR ANY OTHER PURPOSE AND MAY NOT BE REPRODUCED OR DISCLOSED TO OTHERS WITHOUT THE PRIOR WRITTEN CONSENT OF SVA ARCHITECTS INC. ALL RIGHTS RESERVED. © COPYRIGHT 2016.

LICENSED ARCHITECT ROBERT M. SIMPSON No. C-18301 JAN 31, 2025 STATE OF CALIFORNIA

REVISIONS

NO.	DESCRIPTION	DATE	APPROVED
1	90% CD SUBMITTAL	12/15/2022	
2	100% CD SUBMITTAL	05/01/2023	
3	FINAL SUBMITTAL	06/30/2023	

B.M.: THE CITY OF GARDENA BENCHMARK NO. SD-15 ELEV. = 43.508'

CITY OF GARDENA
DEPARTMENT OF PUBLIC WORKS - ENGINEERING

SLAB PLAN

COMMUNITY AQUATICS & SENIOR CENTER
A11.1

	INITIAL	DATE
DESIGNED BY	AP/EC	06/26/2022
DRAWN BY	NC	04/20/23
CHECKED BY	DB	04/29/23

APPROVED BY: DIRECTOR OF PUBLIC WORKS

SHT. 46 OF 195 DWG. NO. 5-2606

CARDENA COMMUNITY AQUATICS AND SENIOR CENTER - CITY SUBMITTAL SET

PLOT DATE: 6/30/2023 2:37:26 PM
PLOT BY: Nicholas Cruz
FILE NAME: C:\Users\ncruz\Documents\Gardena Community Pool and Senior Center_ddcwork4ncruz.ian.rvt

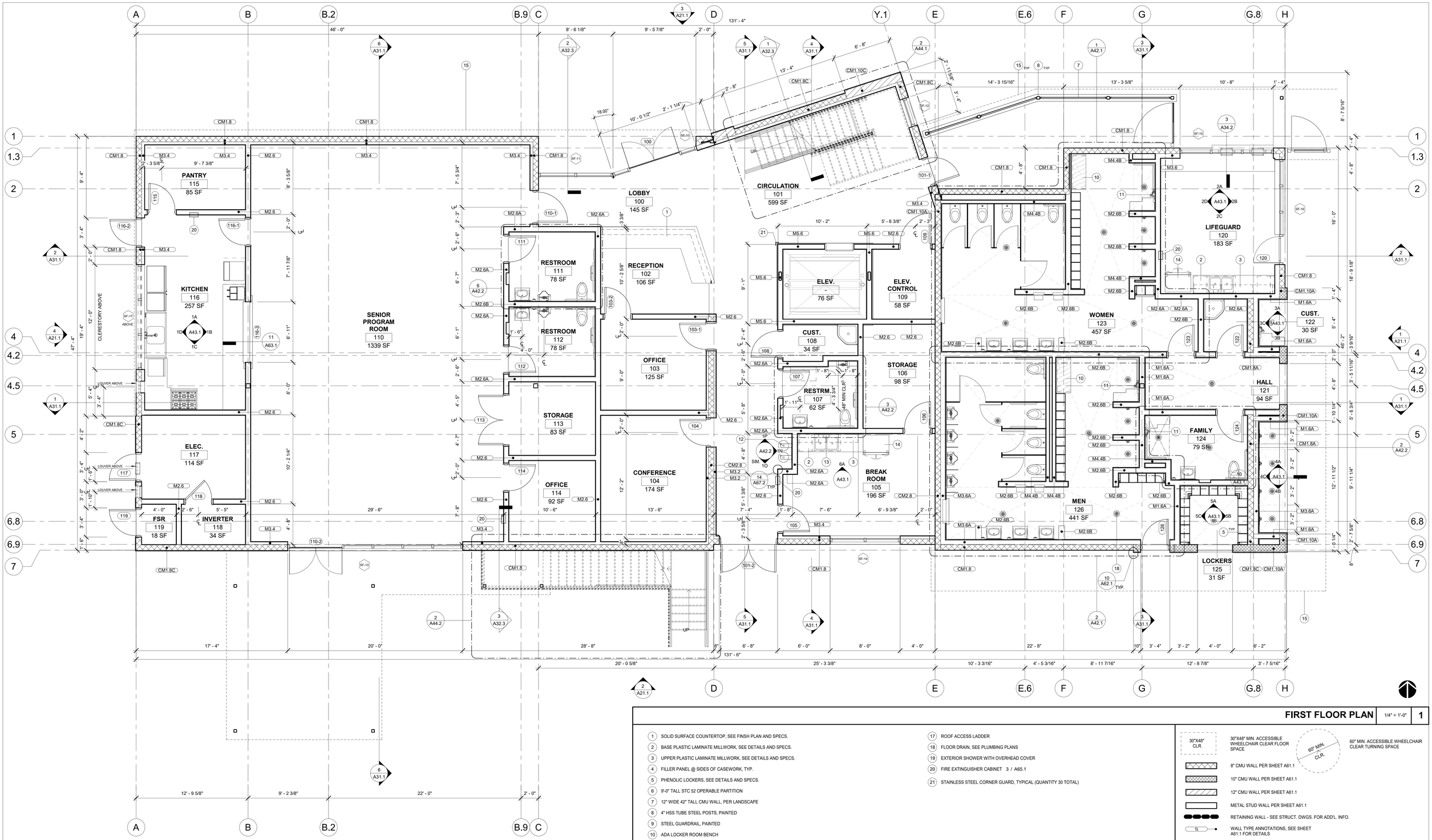

FIRST FLOOR PLAN

1/4" = 1'-0" | 1

FLOOR PLAN KEYNOTES

1. SOLID SURFACE COUNTERTOP, SEE FINSH PLAN AND SPECS.
2. BASE PLASTIC LAMINATE MILLWORK, SEE DETAILS AND SPECS.
3. UPPER PLASTIC LAMINATE MILLWORK, SEE DETAILS AND SPECS.
4. FILLER PANEL @ SIDES OF CASEWORK, TYP.
5. PHENOLIC LOCKERS, SEE DETAILS AND SPECS.
6. 9'-0" TALL STC 52 OPERABLE PARTITION
7. 12" WIDE 42" TALL CMU WALL, PER LANDSCAPE
8. 4" HSS TUBE STEEL POSTS, PAINTED
9. STEEL GUARDRAIL, PAINTED
10. ADA LOCKER ROOM BENCH
11. ADA SHOWER, FOR MOUNTING HEIGHTS SEE 1 / A67.2
12. DRINKING FOUNTAIN, FOR MOUNTING SEE 2 / GEN-5 & 8 / A67.1
13. ACCESSIBLE SINK
14. REFRIGERATOR, SEE SPECS, CFCI
15. OVERHEAD LINES
16. GLULAM COLUMNS STANE GRADE WITH MARINE GRADE VARNISH
17. ROOF ACCESS LADDER
18. FLOOR DRAIN, SEE PLUMBING PLANS
19. EXTERIOR SHOWER WITH OVERHEAD COVER
20. FIRE EXTINGUISHER CABINET 3 / A65.1
21. STAINLESS STEEL CORNER GUARD, TYPICAL (QUANTITY 30 TOTAL)

FLOOR PLAN LEGEND

- 30"X48" CLR. — 30"X48" MIN. ACCESSIBLE WHEELCHAIR CLEAR FLOOR SPACE
- 60" MIN. CLR. — 60" MIN. ACCESSIBLE WHEELCHAIR CLEAR TURNING SPACE
- 8" CMU WALL PER SHEET A61.1
- 10" CMU WALL PER SHEET A61.1
- 12" CMU WALL PER SHEET A61.1
- METAL STUD WALL PER SHEET A61.1
- RETAINING WALL - SEE STRUCT. DWGS. FOR ADD'L. INFO.
- 1i — WALL TYPE ANNOTATIONS, SEE SHEET A61.1 FOR DETAILS
- 101 — NUMBER INDICATES DOOR PER SCHEDULE, REFER TO SHEET A52.1
- 1 — NUMBER INDICATED STOREFRONT PER SCHEDULE, REFER TO SHEET A52.2
- F.E. 20 — FIRE EXTINGUISHER CABINET PER DET. 3/A65.1

FLOOR PLAN GENERAL NOTES:

1. ALL DIMENSIONS ARE TO CENTERLINE OF THE GRID LINES AND/OR TO THE FACE OF STUDS, U.N.O.
2. UNLESS NOTED OTHERWISE, ALL WALLS ARE FULL HEIGHT.
3. REFER TO SHEET GEN-4 FOR TYPICAL ACCESSIBILTY REQUIREMENTS AND DIMENSIONS.
4. REFER TO ENLARGED PLANS FOR DIMENSIONS AND CALLOUTS NOT SHOWN HERE.

PREPARED BY:
SVA ARCHITECTS
6 HUTTON CENTRE DR, SUITE 1150
SANTA ANA, CA 92707
T 949.809.3380 WWW.SVA-ARCHITECTS.COM

THIS DOCUMENT CONTAINS INFORMATION PROPRIETARY TO SVA ARCHITECTS, INC. AND IS SUBMITTED IN CONFIDENCE FOR THE LIMITED PURPOSE OF EVALUATION, BIDDING OR REVIEW. THIS DOCUMENT OR ITS CONTENTS MAY NOT BE USED FOR ANY OTHER PURPOSE AND MAY NOT BE REPRODUCED OR DISCLOSED TO OTHERS WITHOUT THE PRIOR WRITTEN CONSENT OF SVA ARCHITECTS INC. ALL RIGHTS RESERVED, © COPYRIGHT 2018.

LICENSED ARCHITECT ROBERT M. SIMPSON No. C-17651 JAN. 31, 2025 STATE OF CALIFORNIA

REVISIONS

NO.	DESCRIPTION	DATE	APPROVED
1	90% CD SUBMITTAL	12/15/2022	
2	100% CD SUBMITTAL	05/01/2023	
3	FINAL SUBMITTAL	06/30/2023	

B.M.: THE CITY OF GARDENA BENCHMARK NO. SD-15 ELEV. = 43.508'

CITY OF GARDENA
DEPARTMENT OF PUBLIC WORKS - ENGINEERING

FIRST FLOOR PLAN

COMMUNITY AQUATICS & SENIOR CENTER
A11.2

	INITIAL	DATE
DESIGNED BY	AP/EC	05/25/2022
DRAWN BY	NC	06/20/23
CHECKED BY	DB	06/29/23

APPROVED BY:
APPROVED BY: DIRECTOR OF PUBLIC WORKS
SHT. 47 OF 195 DWG. NO. 5-2606

CARDINA COMMUNITY AQUATICS AND SENIOR CENTER - CITY SUBMITTAL SET

PLOT DATE: 12/13/2022 8:57:27 AM
PLOT BY: Nicholas Cruz
FILE NAME: C:\Users\ncruz\Documents\Gardena_Community Pool and Senior Center_dbrownlow-sva-com.rvt

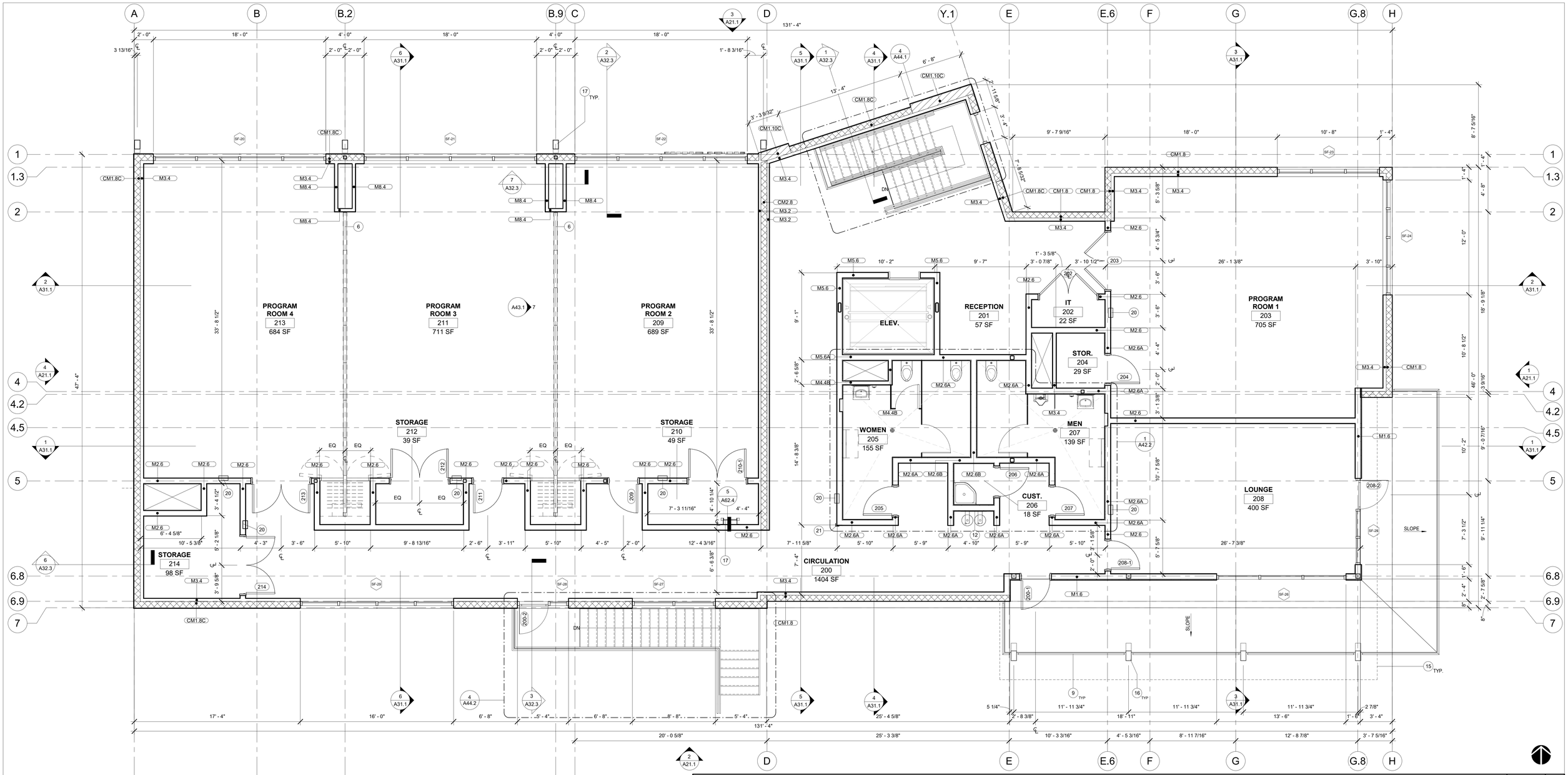

SECOND FLOOR PLAN

1/4" = 1'-0"

1

1. SOLID SURFACE COUNTERTOP, SEE FINSH PLAN AND SPECS.
2. BASE PLASTIC LAMINATE MILLWORK, SEE DETAILS AND SPECS.
3. UPPER PLASTIC LAMINATE MILLWORK, SEE DETAILS AND SPECS.
4. FILLER PANEL @ SIDES OF CASEWORK, TYP.
5. PHENOLIC LOCKERS, SEE DETAILS AND SPECS.
6. 9'-0" TALL STC 52 OPERABLE PARTITION
7. 12" WIDE 42" TALL CMU WALL, PER LANDSCAPE
8. 4" HSS TUBE STEEL POSTS, PAINTED
9. STEEL GUARDRAIL, PAINTED
10. ADA LOCKER ROOM BENCH
11. ADA SHOWER, FOR MOUNTING HEIGHTS SEE 1 / A67.2
12. DRINKING FOUNTAIN, FOR MOUNTING SEE 2 / GEN-5 & 8 / A67.1
13. ACCESSIBLE SINK
14. REFRIGERATOR, SEE SPECS, CFCI
15. OVERHEAD LINES
16. GLULAM COLUMNS STANE GRADE WITH MARINE GRADE VARNISH
17. ROOF ACCESS LADDER
18. FLOOR DRAIN, SEE PLUMBING PLANS
19. EXTERIOR SHOWER WITH OVERHEAD COVER
20. FIRE EXTINGUISHER CABINET 3 / A65.1
21. STAINLESS STEEL CORNER GUARD, TYPICAL (QUANTITY 30 TOTAL)

FLOOR PLAN KEYNOTES

30"X48" CLR. — 30"X48" MIN. ACCESSIBLE WHEELCHAIR CLEAR FLOOR SPACE

60" MIN. CLR. — 60" MIN. ACCESSIBLE WHEELCHAIR CLEAR TURNING SPACE

- 8" CMU WALL PER SHEET A61.1
- 10" CMU WALL PER SHEET A61.1
- 12" CMU WALL PER SHEET A61.1
- METAL STUD WALL PER SHEET A61.1
- RETAINING WALL - SEE STRUCT. DWGS. FOR ADD'L. INFO.
- 1| WALL TYPE ANNOTATIONS, SEE SHEET A61.1 FOR DETAILS
- (101) NUMBER INDICATES DOOR PER SCHEDULE, REFER TO SHEET A52.1
- (1) NUMBER INDICATED STOREFRONT PER SCHEDULE, REFER TO SHEET A52.2
- F.E. FIRE EXTINGUISHER CABINET PER DET. 3/A65.1

FLOOR PLAN GENERAL NOTES:

1. ALL DIMENSIONS ARE TO CENTERLINE OF THE GRID LINES AND/OR TO THE FACE OF STUDS, U.N.O.
2. UNLESS NOTED OTHERWISE, ALL WALLS ARE FULL HEIGHT.
3. REFER TO SHEET GEN-4 FOR TYPICAL ACCESSIBILTY REQUIREMENTS AND DIMENSIONS.
4. REFER TO ENLARGED PLANS FOR DIMENSIONS AND CALLOUTS NOT SHOWN HERE.

FLOOR PLAN LEGEND

PREPARED BY:
SVA ARCHITECTS
6 HUTTON CENTRE DR, SUITE 1150
SANTA ANA, CA 92707
T 949.809.3380 WWW.SVA-ARCHITECTS.COM

THIS DOCUMENT CONTAINS INFORMATION PROPRIETARY TO SVA ARCHITECTS INC. AND IS FURNISHED IN CONFIDENCE FOR THE LIMITED PURPOSE OF EVALUATION, BIDDING OR REVIEW. THIS DOCUMENT OR ITS CONTENTS MAY NOT BE USED FOR ANY OTHER PURPOSE AND MAY NOT BE REPRODUCED OR DISCLOSED TO OTHERS WITHOUT THE PRIOR WRITTEN CONSENT OF SVA ARCHITECTS INC. ALL RIGHTS RESERVED. © COPYRIGHT 2015.

LICENSED ARCHITECT ROBERT M. SIMMONS No. C-18001 JAN 31, 2025 STATE OF CALIFORNIA

REVISIONS

NO.	DESCRIPTION	DATE	APPROVED
1	90% CD SUBMITTAL	12/15/2022	
2	100% CD SUBMITTAL	05/01/2023	
3	FINAL SUBMITTAL	06/30/2023	

B.M.: THE CITY OF GARDENA BENCHMARK NO. SD-15
ELEV. = 43.508'

CITY OF GARDENA
DEPARTMENT OF PUBLIC WORKS - ENGINEERING

SECOND FLOOR PLAN

COMMUNITY AQUATICS & SENIOR CENTER

A11.3

	INITIAL	DATE
DESIGNED BY	AP/EC	05/25/2022
DRAWN BY	NC	06/20/23
CHECKED BY	DB	06/29/23

APPROVED BY:

APPROVED BY: DIRECTOR OF PUBLIC WORKS

SHT. 48 OF 195 DWG. NO. 5-2606

CARDINA COMMUNITY AQUATICS AND SENIOR CENTER - CITY SUBMITTAL SET
PLOT DATE: 6/30/2023 10:24:44AM (Gardena Community Pool and Senior Center - plan-sheets-pw-blank.ctb) user:nf
REF FILE: G:\2021\2021-33\Arch\Drawings\Sheets\A11.3 - SECOND FLOOR PLAN.dwg

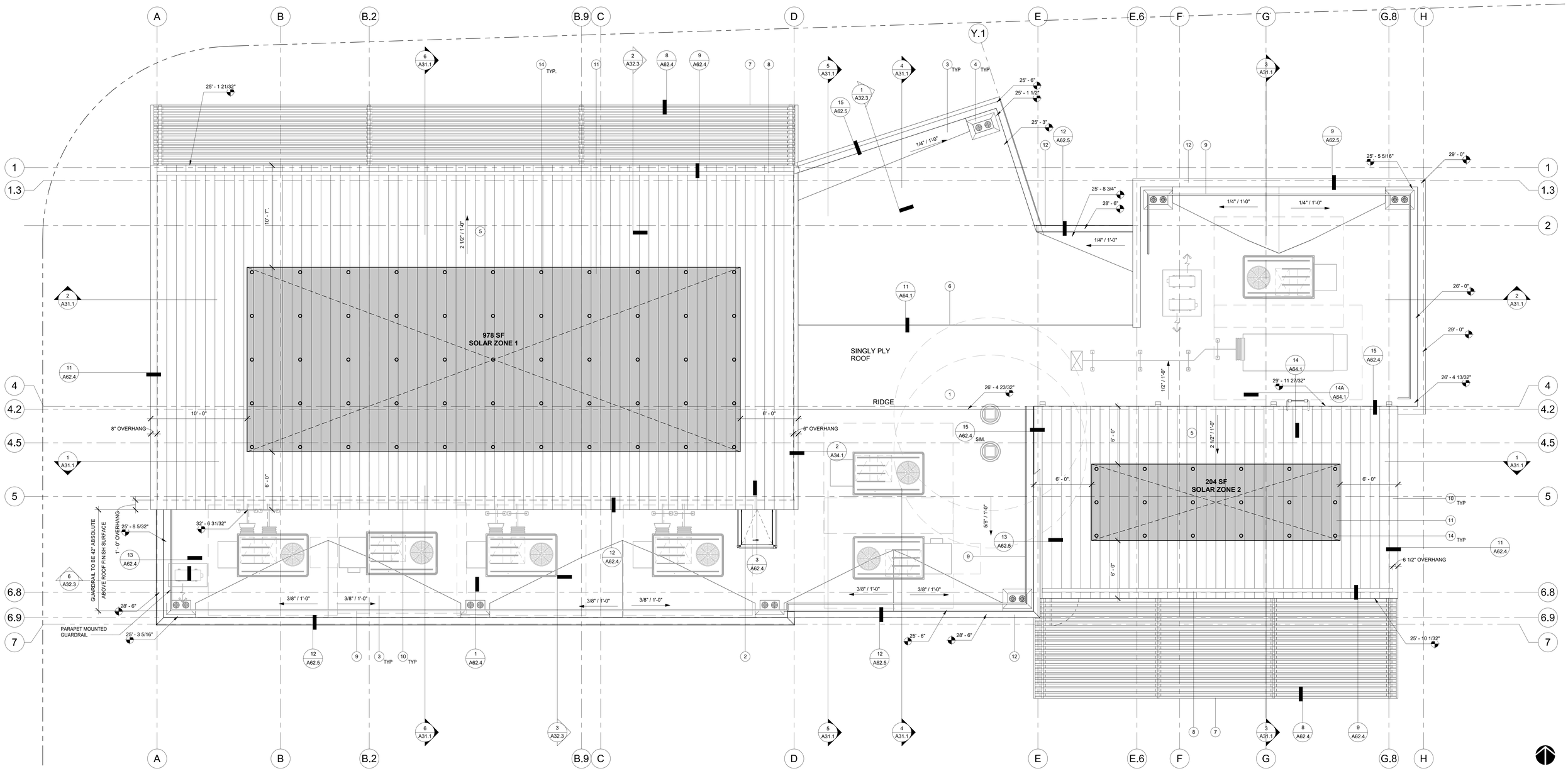

ROOF PLAN | 1/4" = 1'-0" | 1

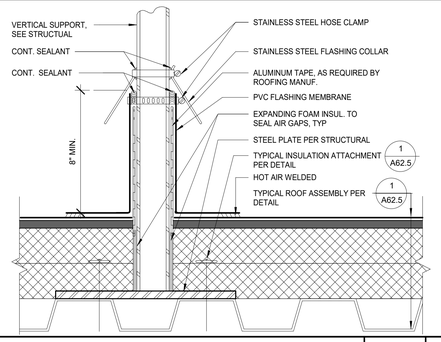

VERTICAL SOLAR SUPPORT FLASHING | 3" = 1'-0" | 2

SOLAR ZONE

SOLAR ZONE SHALL COMPLY WITH ACCESS, PATHWAY, SMOKE VENTILATION AND SPACING REQUIREMENTS AS SPECIFIED IN THE CFC AND BY THE LOCAL FIRE AUTHORITY

POTENTIAL LOCATION OF VERTICAL SUPPORT FOR SOLAR PANEL FRAMING SYSTEM 2 / A11.4

SOLAR AREA REQUIREMENTS: CALIFORNIA ENERGY CODE 110.10B
SOLAR ZONE SHALL BE NO LESS THAN 15% OF TOTAL ROOF AREA OF THE BUILDING EXCLUDING ANY SKYLIGHT AREA.

TOTAL ROOF AREA	5,936SF
TOTAL SKYLIGHT AREA	N/A
15% ROOF AREA	890.4SF

AVAILABLE SOLAR ZONE AREA:

SOLAR ZONE 1	978SF
SOLAR ZONE 2	204SF
TOTAL AREA	**1,182SF > 890.4SF THUS OK**

NOTES:
1. FOR TYPICAL ROOF PENETRATION DETAIL SEE 3 / A62.5
2. SOLAR CONTRACTOR TO DETERMINE SOLAR PANEL SUPPORT FRAMING DESIGN IN COMPLIANCE WITH SOLAR PANEL MANUFACTURERS INSTALLATION INSTRUCTIONS.

SOLAR NOTES

1. GRAY PVC MEBRANE ROOFING O/ DENSDECK, O/ R-40 RIGID INSULATION 1 / A62.5 O/ VAPOR BARRIER O/ STRUCTURAL DECK
2. ROOF ACCESS HATCH PER DETAIL 3 / A62.4
3. BUILT-UP FOAM CRICKETS
4. ROOF DRAIN AND O/FLOW DRAIN 1 / A62.4
5. GRAY PVC MEMBRANE ROOFING W/ ADHERED RIBS O/ DENSDECK, O/ R-40 1 / A62.5 RIGID INSULATION O/ VAPOR BARRIER O/ STRUCTURAL DECK
6. ROOF MOUNTED STEEL GUARDRAIL, PAINTED PER DETAIL 11 / A64.1
7. ALUMINUM TRELLIS, PAINTED
8. INTEGRAL GUTTER, PER DETAIL 9 / A62.4
9. PARAPET MOUNTED GUARDRAILING, PER DETAIL 13 / A62.4
10. LINE OF WALL BELOW
11. SOLAR ZONE, REFER TO SOLAR NOTES ON THIS PAGE
12. TOP OF PARAPET
13. MECHANICAL EQUIPMENT, SEE MECH. PLANS. FOR EQUIP. PAD SEE DETAIL 4 / A62.5
14. VERTICAL SUPPORT FOR SOLAR PANEL FRAMING SYSTEM 2 / A11.4

ROOF PLAN KEYNOTES

PREPARED BY:
SVA ARCHITECTS
6 HUTTON CENTRE DR, SUITE 1150
SANTA ANA, CA 92707
T 949.809.3380 WWW.SVA-ARCHITECTS.COM

THIS DOCUMENT CONTAINS INFORMATION PROPRIETARY TO SVA ARCHITECTS INC. AND IS FURNISHED IN CONFIDENCE FOR THE LIMITED PURPOSE OF EVALUATION, BIDDING OR REVIEW. THIS DOCUMENT OR ITS CONTENTS MAY NOT BE USED FOR ANY OTHER PURPOSE AND MAY NOT BE REPRODUCED OR DISCLOSED TO OTHERS WITHOUT THE PRIOR WRITTEN CONSENT OF SVA ARCHITECTS INC. ALL RIGHTS RESERVED, © COPYRIGHT 2018.

LICENSED ARCHITECT ROBERT M. SIMMONS No. C-19501 JAN. 31, 2025 STATE OF CALIFORNIA

B.M.: THE CITY OF GARDENA BENCHMARK NO. SD-15
ELEV. = 43.508'

REVISIONS

NO.	DESCRIPTION	DATE	APPROVED
1	90% CD SUBMITTAL	12/15/2022	
2	100% CD SUBMITTAL	05/01/2023	
3	FINAL SUBMITTAL	06/30/2023	

CITY OF GARDENA
DEPARTMENT OF PUBLIC WORKS - ENGINEERING

ROOF PLAN

COMMUNITY AQUATICS & SENIOR CENTER

A11.4

	INITIAL	DATE
DESIGNED BY	AP/EC	05/25/2022
DRAWN BY	NC	06/20/23
CHECKED BY	DB	06/29/23

APPROVED BY:

APPROVED BY: DIRECTOR OF PUBLIC WORKS

SHT. 49 OF 195 DWG. NO. S-2606

CARDENA COMMUNITY AQUATICS AND SENIOR CENTER - CITY SUBMITTAL SET

PLOT DATE: 12/15/2022 2:57:14 PM
PLOT BY: Nicholas Cardenas
FILE PATH: G:\Projects\2021\2111 Gardena Community Pool and Senior Center_Elmonte\Arch\Gardena_Community Pool and Senior Center_Elmonte_arch files for A.rvt

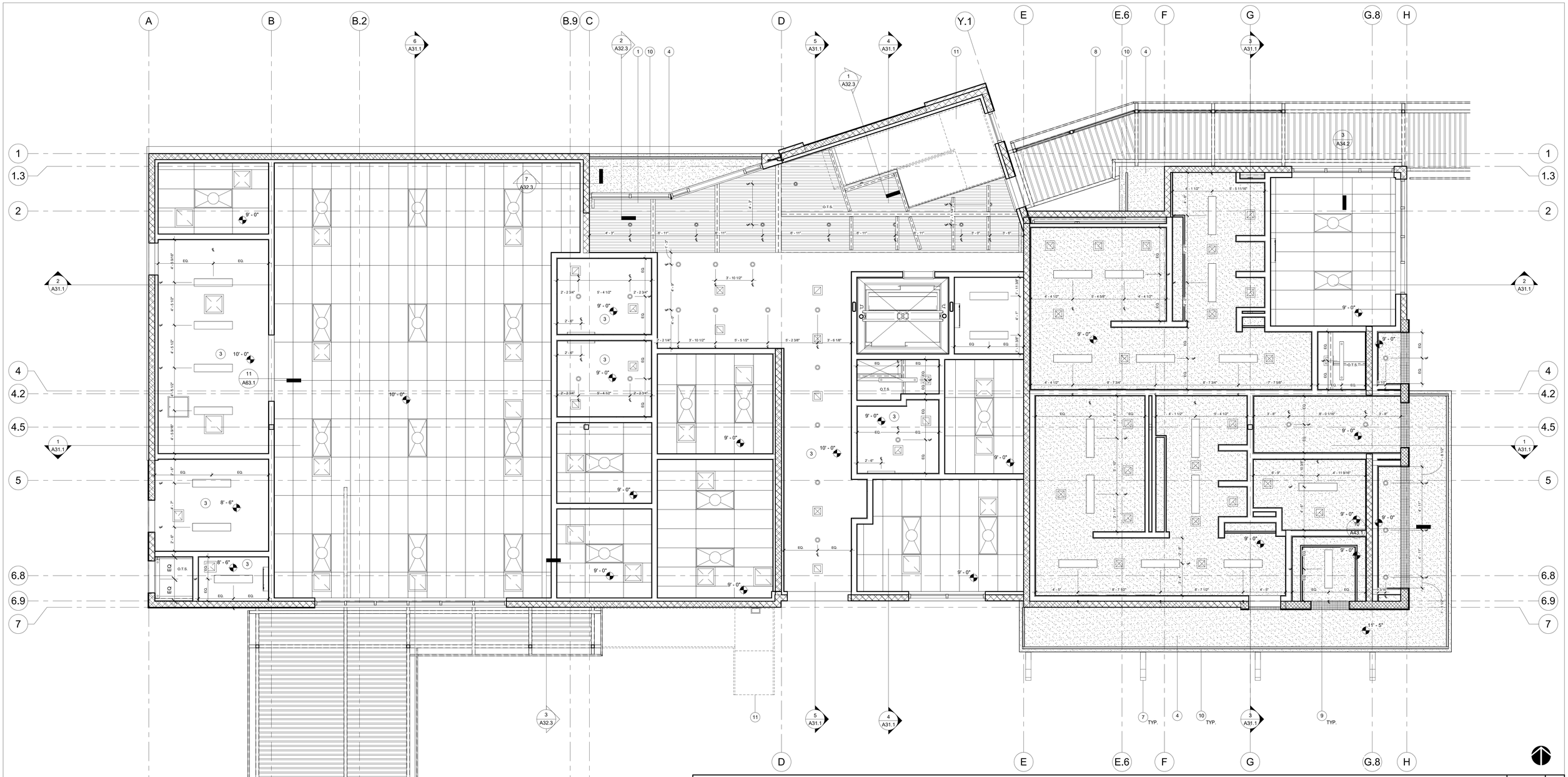

FIRST FLOOR RCP

1/4" = 1'-0" | 1

RCP KEYNOTES

1. EXPOSED STRUCTURAL DECK - DOVETAIL PROFILE, PAINTED
2. EXPOSED STRUCTURAL FRAMING, PAINTED
3. GYP. BOARD CEILING
4. PLASTER SOFFIT
5. ALUMINUM LATTICE
6. EXPOSED STAIN GRADE GLULAM BEAM, STAINED
7. EXPOSED STAIN GRADE GLULAM POST, STAINED
8. STEEL AND WOOD TRELLIS, SEE SHEET A44.3
9. 2"x2" TILE, SEE ELEVATIONS FOR TYPE AND COLOR
10. SOFFIT VENT
11. STEEL STAIR, SEE STAIR PLANS AND STRUCTURAL DRAWINGS
12. EXPOSED MECH. DUCTWORK, PAINTED

RCP LEGEND

- RECESSED SUPPLY AIR GRILL, SEE MECH. DRAWINGS
- RECESSED RETURN AIR GRILL, SEE MECH. DRAWINGS
- RECESSED EXHAUST AIR GRILL, SEE MECH. DRAWINGS
- DECORATIVE PENDANT MOUNTED FIXTURE, SEE ELEC. DRAWINGS*
- RECESSED DOWNLIGHT, SEE ELEC. DRAWINGS*
- WALL MOUNTED DOWNLIGHT, SEE ELEC. DRAWINGS* WALL MOUNTED TO BE 8' - 0" TYP.
- PENDANT FIXTURE - LOUNGE, SEE ELEC. DRAWINGS*
- 2X4 LUMINAIRE, SEE ELEC. DRAWINGS*
- SURFACE MOUNTED FLUORESCENT FIXTURE, SEE ELEC. DRAWINGS*
- SUSPENDED STRIP LIGHT FIXTURE - CLASSROOM, SEE ELEC. DRAWINGS*
- SUSPENDED STRIP LIGHT FIXTURE - UTILITY LOCATIONS, SEE ELEC. DRAWINGS*
- EXIT SIGNAGE, SEE ELECTRICAL DRAWINGS
- SPEAKERS, SEE ELECTRICAL DRAWINGS
- ROOF HATCH ABOVE, REFER TO DET. 8/A62.6
- GYP. BOARD CEILING, REFER TO NOTE 1
- EXTERIOR PLASTER SOFFIT AND INTERIOR CEILING, REFER TO NOTE 3
- 2' X 4' SUSPENDED CEILING TILES, REFER TO NOTE 2
- DOVETAIL METAL DECKING, SEE STR'L DRAWINGS

NOTES:

1. GYPSUM BOARD CEILINGS SHALL BE FRAMED WITH METAL STUD JOISTS, U.N.O. SEE DETAIL 1/A62.3 FOR MORE INFORMATION.
2. FOR SUSPENDED ACOUSTICAL CEILING, REFER TO SHEET A62.2.
3. FOR PLASTER SOFFIT DETAILS, SEE DETAIL 11/A62.3.
4. AT ALL ROOMS WITHOUT CEILINGS (LABELLED AS "EXP" ON PLAN AND/OR ON THE FINISH SCHEDULE), ALL EXPOSED SURFACES AND ELEMENTS SHALL BE PAINTED, INCLUDING STRUCTURE, DECK ABOVE, AND ALL UTILITIES INCLUDING PIPING, CONDUITS, DUCTWORK, ETC.
5. PLUMBING, ELECTRICAL, MECHANICAL AND FIRE PROTECTION COMPONENTS ARE SHOWN FOR REFERNECE AND COORDINATION PURPOSES. REFER TO PLUMBING, ELECTRICAL, MECHANICAL AND FIRE PROTECTION DRAWINGSFOR COMPONENT AND SYSTEM QUANTITIES, TYPES AND REQUIREMENTS
6. CENTER LIGHTING FIXTURES BETWEEN OPPOSITE WALLS, U.N.O.
7. ALL DIMENSIONS, NOTES, KEYNOTES AND DETAILS CALLOUTS ARE TYPICAL, U.N.O.
8. SEE SHEET A50.1 FOR INTERIOR FINISH LEGEND
9. AT EXPOSED CEILINGS, ALL DUCTS, PIPES AND CONDUITS SHALL RUN PARALLEL OR PERPENDICULAR TO WALL, AND AS CLOSE TO THE DECK ABOVE AS POSSIBLE. PROVIDE ESCUTCHEONS FOR CONDUIT/PIPES AT WALLS WHERE EXPOSED.

* REFER TO ELECTRICAL DRAWINGS FOR LOCATIONS OF EMERGENCY LIGHTING.

PREPARED BY:
SVA ARCHITECTS
6 HUTTON CENTRE DR, SUITE 1150
SANTA ANA, CA 92707
T 949.809.3380 WWW.SVA-ARCHITECTS.COM

THIS DOCUMENT CONTAINS INFORMATION PROPRIETARY TO SVA ARCHITECTS INC. AND IS FURNISHED IN CONFIDENCE FOR THE LIMITED PURPOSE OF EVALUATION, BIDDING OR REVIEW. THIS DOCUMENT OR ITS CONTENTS MAY NOT BE USED FOR ANY OTHER PURPOSE AND MAY NOT BE REPRODUCED OR DISCLOSED TO OTHERS WITHOUT THE PRIOR WRITTEN CONSENT OF SVA ARCHITECTS INC. ALL RIGHTS RESERVED. © COPYRIGHT 2016.

LICENSED ARCHITECT ROBERT M. SIMPSON No. C-18001 JAN. 31, 2025 STATE OF CALIFORNIA

B.M.: THE CITY OF GARDENA BENCHMARK NO. SD-15 ELEV. = 43.508'

REVISIONS

NO.	DESCRIPTION	DATE	APPROVED
1	90% CD SUBMITTAL	12/15/2022	
2	100% CD SUBMITTAL	05/01/2023	
3	FINAL SUBMITTAL	06/30/2023	

CITY OF GARDENA
DEPARTMENT OF PUBLIC WORKS - ENGINEERING

FIRST FLOOR RCP

COMMUNITY AQUATICS & SENIOR CENTER

A11.5

	INITIAL	DATE
DESIGNED BY	AP/EC	05/25/2022
DRAWN BY	NC	06/20/23
CHECKED BY	DB	06/29/23

APPROVED BY:

APPROVED BY: DIRECTOR OF PUBLIC WORKS

SHT. 50 OF 195 DWG. NO. 5-2606

CARDENA COMMUNITY AQUATICS AND SENIOR CENTER - CITY SUBMITTAL SET

PLOT DATE: 6/30/2023 9:20:24 AM
PLOT BY: Nicholas Cortez
FILE PATH: G:\2021\2021-21\Documents\Gardena Community Pool and Senior Center - discussions on file\A-S.com.rvt

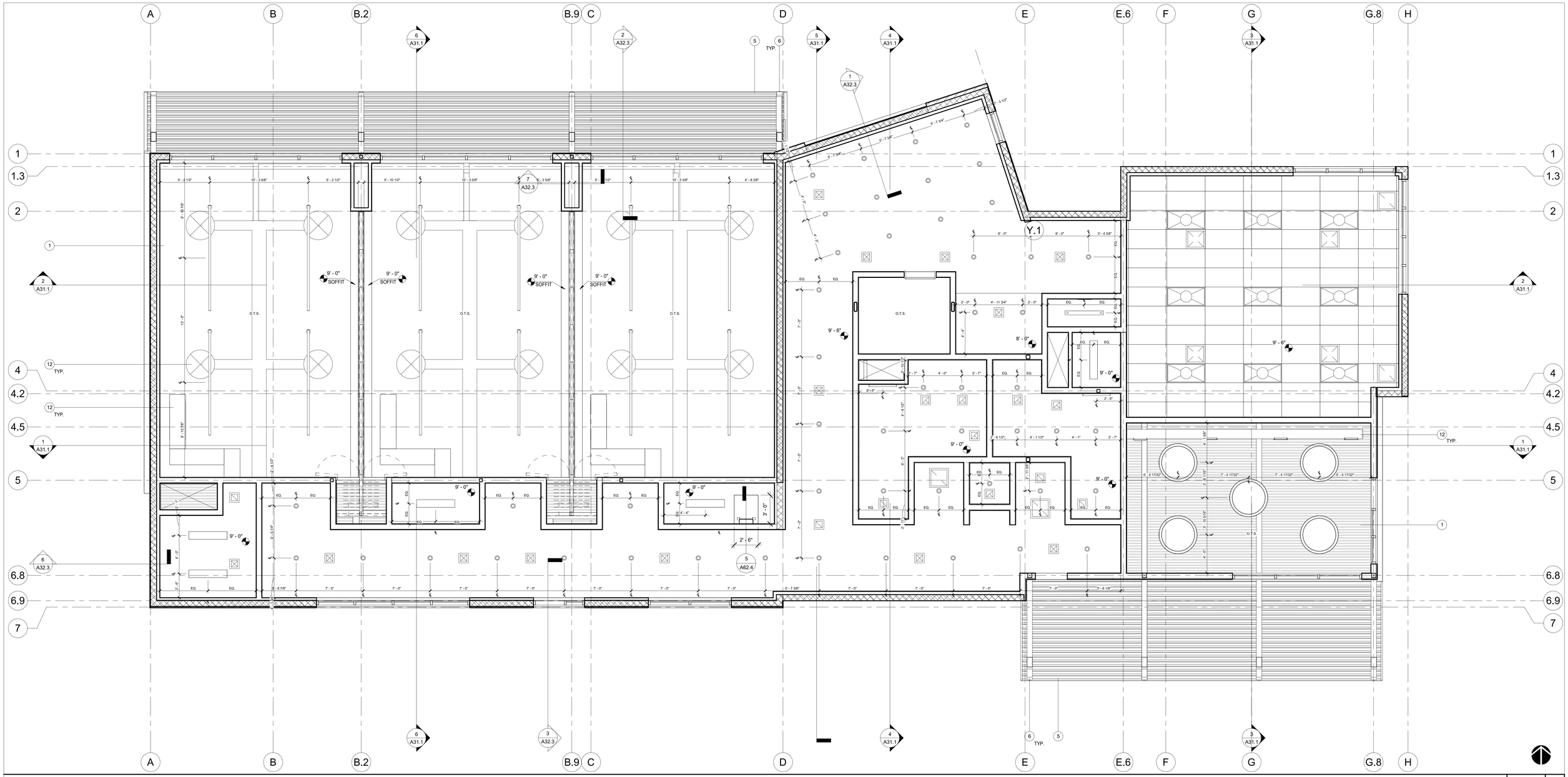

SECOND FLOOR RCP

1/4" = 1'-0"

1

RCP KEYNOTES

1. EXPOSED STRUCTURAL DECK - DOVETAIL PROFILE, PAINTED
2. EXPOSED STRUCTURAL FRAMING, PAINTED
3. GYP. BOARD CEILING
4. PLASTER SOFFIT
5. ALUMINUM LATTICE
6. EXPOSED STAIN GRADE GLULAM BEAM, STAINED
7. EXPOSED STAIN GRADE GLULAM POST, STAINED
8. STEEL AND WOOD TRELLIS, SEE SHEET A44.3
9. 2"x2" TILE, SEE ELEVATIONS FOR TYPE AND COLOR
10. SOFFIT VENT
11. STEEL STAIR, SEE STAIR PLANS AND STRUCTURAL DRAWINGS
12. EXPOSED MECH. DUCTWORK, PAINTED

RCP LEGEND

- RECESSED SUPPLY AIR GRILL, SEE MECH. DRAWINGS
- RECESSED RETURN AIR GRILL, SEE MECH. DRAWINGS
- RECESSED EXHAUST AIR GRILL, SEE MECH. DRAWINGS
- DECORATIVE PENDANT MOUNTED FIXTURE, SEE ELEC. DRAWINGS*
- RECESSED DOWNLIGHT, SEE ELEC. DRAWINGS*
- WALL MOUNTED DOWNLIGHT, SEE ELEC. DRAWINGS*
  WALL MOUNTED TO BE 8' - 0" TYP.
- PENDANT FIXTURE - LOUNGE, SEE ELEC. DRAWINGS*
- 2X4 LUMINAIRE, SEE ELEC. DRAWINGS*
- SURFACE MOUNTED FLUORESCENT FIXTURE, SEE ELEC. DRAWINGS*
- SUSPENDED STRIP LIGHT FIXTURE - CLASSROOM, SEE ELEC. DRAWINGS*
- SUSPENDED STRIP LIGHT FIXTURE - UTILITY LOCATIONS, SEE ELEC. DRAWINGS*
- EXIT SIGNAGE, SEE ELECTRICAL DRAWINGS
- SPEAKERS, SEE ELECTRICAL DRAWINGS
- ROOF HATCH ABOVE, REFER TO DET. 8/A62.6
- GYP. BOARD CEILING, REFER TO NOTE 1
- DOVETAIL METAL DECKING, SEE STR'L DRAWINGS
- EXTERIOR PLASTER SOFFIT AND INTERIOR CEILING, REFER TO NOTE 3
- 2' X 4' SUSPENDED CEILING TILES, REFER TO NOTE 2

NOTES:
1. GYPSUM BOARD CEILINGS SHALL BE FRAMED WITH METAL STUD JOISTS, U.N.O. SEE DETAIL 1/A62.3 FOR MORE INFORMATION.
2. FOR SUSPENDED ACOUSTICAL CEILING, REFER TO SHEET A62.2.
3. FOR PLASTER SOFFIT DETAILS, SEE DETAIL 11/A62.3.
4. AT ALL ROOMS WITHOUT CEILINGS (LABELLED AS "EXP" ON PLAN AND/OR ON THE FINISH SCHEDULE), ALL EXPOSED SURFACES AND ELEMENTS SHALL BE PAINTED, INCLUDING STRUCTURE, DECK ABOVE, AND ALL UTILITIES INCLUDING PIPING, CONDUITS, DUCTWORK, ETC.
5. PLUMBING, ELECTRICAL, MECHANICAL AND FIRE PROTECTION COMPONENTS ARE SHOWN FOR REFERNECE AND COORDINATION PURPOSES. REFER TO PLUMBING, ELECTRICAL, MECHANICAL AND FIRE PROTECTION DRAWINGSFOR COMPONENT AND SYSTEM QUANTITIES, TYPES AND REQUIREMENTS
6. CENTER LIGHTING FIXTURES BETWEEN OPPOSITE WALLS, U.N.O.
7. ALL DIMENSIONS, NOTES, KEYNOTES AND DETAILS CALLOUTS ARE TYPICAL, U.N.O.
8. SEE SHEET A50.1 FOR INTERIOR FINISH LEGEND
9. AT EXPOSED CEILINGS, ALL DUCTS, PIPES AND CONDUITS SHALL RUN PARALLEL OR PERPENDICULAR TO WALL, AND AS CLOSE TO THE DECK ABOVE AS POSSIBLE. PROVIDE ESCUTCHEONS FOR CONDUIT/PIPES AT WALLS WHERE EXPOSED.

* REFER TO ELECTRICAL DRAWINGS FOR LOCATIONS OF EMERGENCY LIGHTING.

PREPARED BY:

SVA ARCHITECTS
6 HUTTON CENTRE DR, SUITE 1150
SANTA ANA, CA 92707
T 949.809.3380 WWW.SVA-ARCHITECTS.COM

THIS DOCUMENT CONTAINS INFORMATION PROPRIETARY TO SVA ARCHITECTS INC. AND IS FURNISHED IN CONFIDENCE FOR THE LIMITED PURPOSE OF EVALUATION, BIDDING OR REVIEW. THE INFORMATION CONTAINED HEREIN SHALL NOT BE USED FOR ANY OTHER PURPOSE, DISCLOSED OR REPRODUCED OR DISCLOSED TO OTHERS WITHOUT THE PRIOR WRITTEN CONSENT OF SVA ARCHITECTS INC. ALL RIGHTS RESERVED, © COPYRIGHT 2018.

LICENSED ARCHITECT ROBERT M. SIMPSON No. C-18001 JAN. 31, 2025 STATE OF CALIFORNIA

REVISIONS

NO.	DESCRIPTION	DATE	APPROVED
1	90% CD SUBMITTAL	12/15/2022	
2	100% CD SUBMITTAL	05/01/2023	
3	FINAL SUBMITTAL	06/30/2023	

B.M.: THE CITY OF GARDENA BENCHMARK NO. SD-15
ELEV. = 43.508'

CITY OF GARDENA
DEPARTMENT OF PUBLIC WORKS - ENGINEERING

SECOND FLOOR RCP

COMMUNITY AQUATICS & SENIOR CENTER

A11.6

	INITIAL	DATE
DESIGNED BY	AP/EC	05/25/2022
DRAWN BY	NC	06/20/23
CHECKED BY	DS	06/29/23

APPROVED BY:

APPROVED BY: DIRECTOR OF PUBLIC WORKS

SHT. 51 OF 195 DWG. NO. 5-2606

CARDENA COMMUNITY AQUATICS AND SENIOR CENTER - CITY SUBMITTAL SET
PLOT DATE: 6/30/2023 9:30:24 AM
PLOT NAME: C:\Users\nicholas.cruz\Documents\Gardena Community Pool and Senior Center_dbsvarchitect-cruz.nicholas.rvt

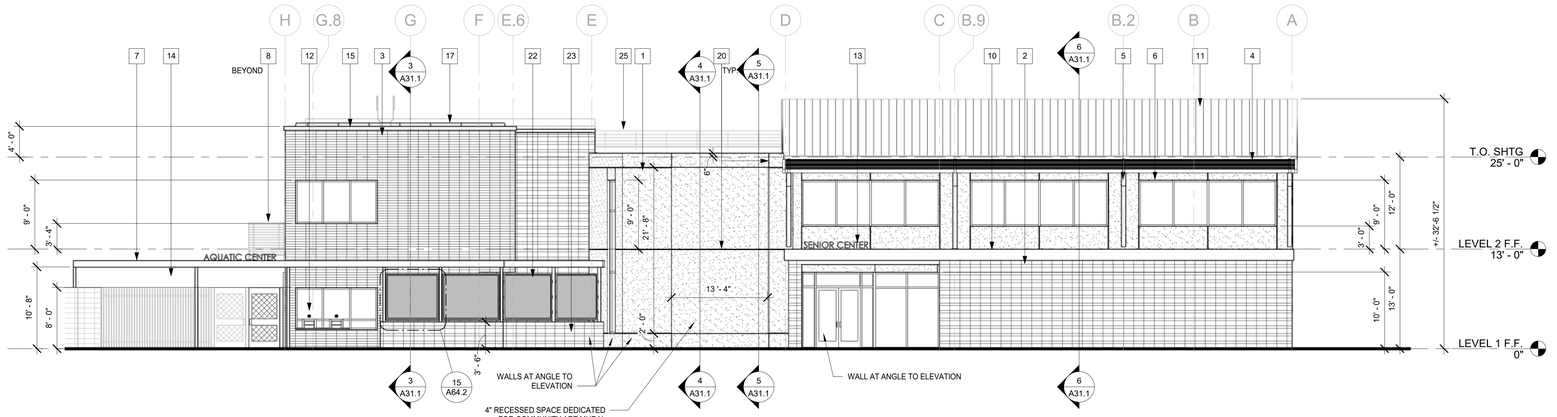

NORTH ELEVATION | 1/8" = 1'-0" | 3

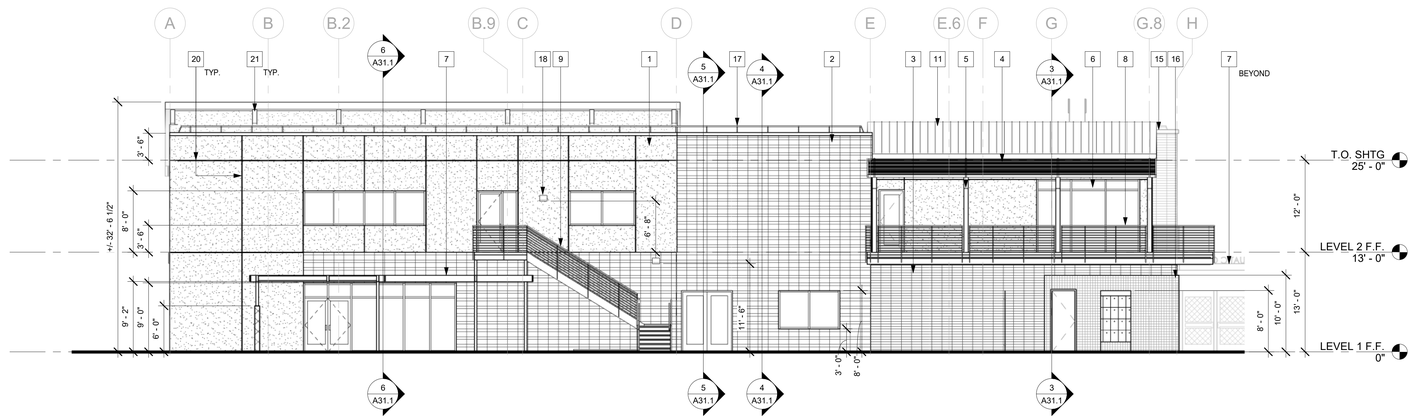

SOUTH ELEVATION | 1/8" = 1'-0" | 2

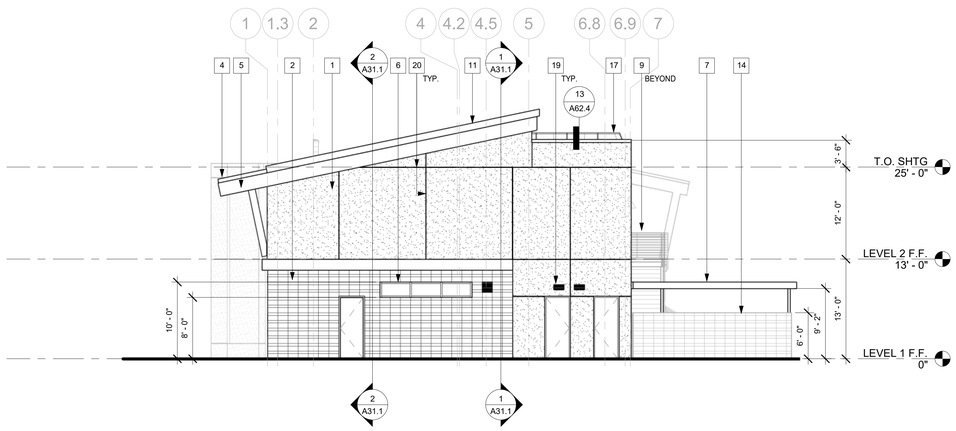

WEST ELEVATION | 1/8" = 1'-0" | 4

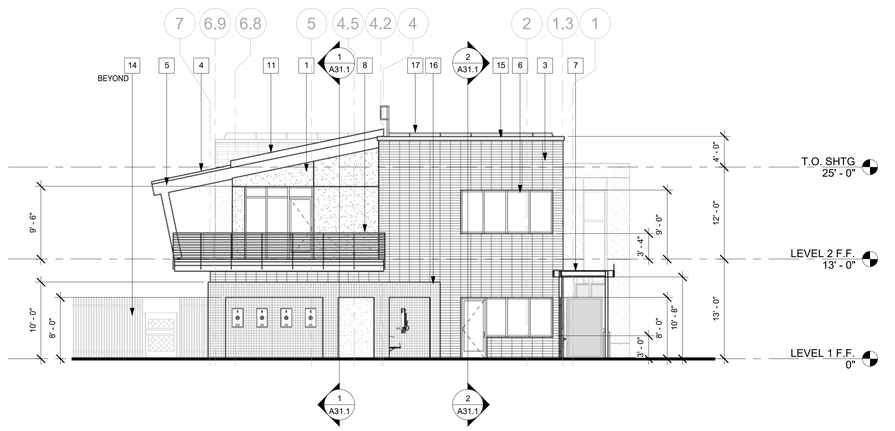

EAST ELEVATION | 1/8" = 1'-0" | 1

1. STUCCO, PAINTED DUNN EDWARDS DEW380 WARM WHITE
2. CMU BLOCK 8"HIGH/4"HIGH STACKED BOND PATTERN
   8" HIGH - ORCO COLOR: NuFad; FINISH: SPLITFACE
   4" HIGH - ORCO COLOR: NuFad; FINISH: PRECISION
3. CMU BLOCK 4"HIGH STACKED BOND PATTERN
   ORCO COLOR: Natural Gray Indio; FINISH: PRECISION
4. ALUMINUM TRELLIS PAINTED TO MATCH ROOF COLOR, SEE ROOF PLAN
5. GLULAM BEAM AND KICKER STAIN GRADE WITH MARINE GRADE VARNISH
6. ALUMINUM STOREFRONT
7. STEEL TRELLIS FRAME, PAINTED; W/ STAINED WOOD RAFTERS, SEE SHEET A64.2
8. STEEL GUARDRAIL, PAINTED DUNN EDWARDS DET695 GRANGE HALL 4 / A34.2 2 / A34.2
9. STEEL GUARDRAIL WITH HANDRAIL, PAINTED DUNN EDWARDS DET695 GRANGE HALL 8 / A64.1
10. SHEET METAL BELLY BAND, PAINTED DUNN EDWARDS DET695 GRANGE HALL 10 / A62.4
11. SINGLE PLY ROOFING WITH 2" TALL RIBS, DARK GRAY COLOR 5 / A62.5
12. TRANSACTION WINDOWS 3 / A34.2
13. 12" HIGH ALUMINUM BUILDING SIGNAGE
14. SITE FENCING AND GATES PER LANDSCAPE
15. CMU PARAPET CAP BLOCK; COLOR TO MATCH BLOCK 9 / A62.5
16. 2"X2" TILE FINISH; DALTILE COLOR OCEAN BLUE 1049 11 / A62.1
17. PARAPET MOUNTED GUARD, PAINTED DUNN EDWARDS DET695 GRANGE HALL 13 / A62.4
18. BUILDING MOUNTED LIGHT, SEE ELECTRICAL PLANS
19. LOUVER, SEE MECHANICAL PLANS 19 / A52.2
20. STUCCO CONTROL JOINT
    HORIZONTAL - 13 / A62.1 16 / A62.1
    VERTICAL - 12 / A62.1 15 / A62.1
21. GLULAM BEAM TAIL, STAIN GRADE WITH MARINE GRADE VARNISH
22. STEEL FRAME WIRE MESH INFILL PANEL 13 / A62.4
23. 12" WIDE CMU WALL
24. SHEET METAL PARAPET CAP, PAINTED DUNN EDWARDS DET695 GRANGE HALL 11 / A62.5
25. ROOFTOP STEEL GUARDRAIL, PAINTED DUNN EDWARDS DET695 GRANGE HALL 4 / A34.2

SENIOR CENTER ELEVATION KEYNOTES

CARDENA COMMUNITY AQUATICS AND SENIOR CENTER - CITY SUBMITTAL SET

PREPARED BY:

SVA ARCHITECTS
6 HUTTON CENTRE DR, SUITE 1150
SANTA ANA, CA 92707
T 949.809.3380 WWW.SVA-ARCHITECTS.COM

THIS DOCUMENT CONTAINS INFORMATION PROPRIETARY TO SVA ARCHITECTS INC. AND IS FURNISHED IN CONFIDENCE FOR THE LIMITED PURPOSE OF EVALUATION, BIDDING OR REVIEW. THIS DOCUMENT OR ITS CONTENTS MAY NOT BE USED FOR ANY OTHER PURPOSE AND MAY NOT BE REPRODUCED OR DISCLOSED TO OTHERS WITHOUT THE PRIOR WRITTEN CONSENT OF SVA ARCHITECTS INC. ALL RIGHTS RESERVED. © COPYRIGHT 2015.

LICENSED ARCHITECT ROBERT M. SIMMONS No. C-18501 JAN. 31, 2025 STATE OF CALIFORNIA

REVISIONS

NO.	DESCRIPTION	DATE	APPROVED
1	90% CD SUBMITTAL	12/15/2022	
2	100% CD SUBMITTAL	05/01/2023	
3	FINAL SUBMITTAL	06/30/2023	

B.M.: THE CITY OF GARDENA BENCHMARK NO. SD-15
ELEV. = 43.508'

CITY OF GARDENA
DEPARTMENT OF PUBLIC WORKS - ENGINEERING

ELEVATIONS

COMMUNITY AQUATICS & SENIOR CENTER

A21.1

	INITIAL	DATE
DESIGNED BY	AP/EC	05/25/2022
DRAWN BY	NC	06/20/23
CHECKED BY	DB	06/29/23

APPROVED BY:

APPROVED BY: DIRECTOR OF PUBLIC WORKS

SHT. 52 OF 195 DWG. NO. 5-2606

PLOT DATE: 6/30/2023 9:29:23 AM
PLOT BY: Nicholas Cruz
PLOT NAME: G:\Projects\2021\Gardena\Gardena Community Pool and Senior Center_dbox-admin\cad-files\A-sheets\A21.1.dwg

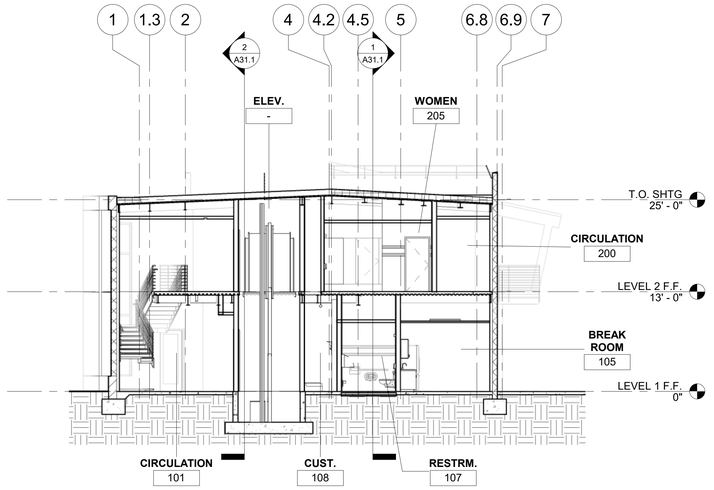

SECTION 4 1/8" = 1'-0" **4**

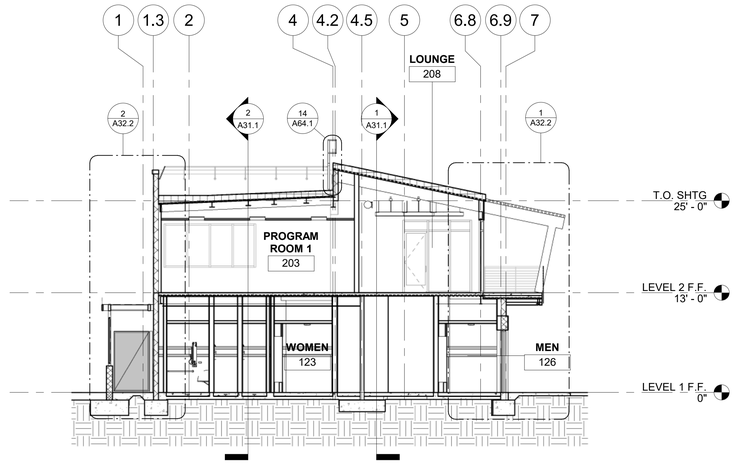

SECTION 3 1/8" = 1'-0" **3**

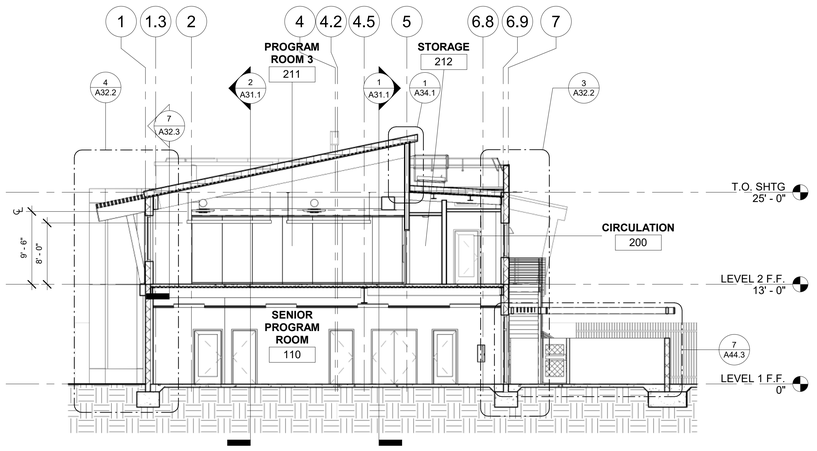

SECTION 6 1/8" = 1'-0" **6**

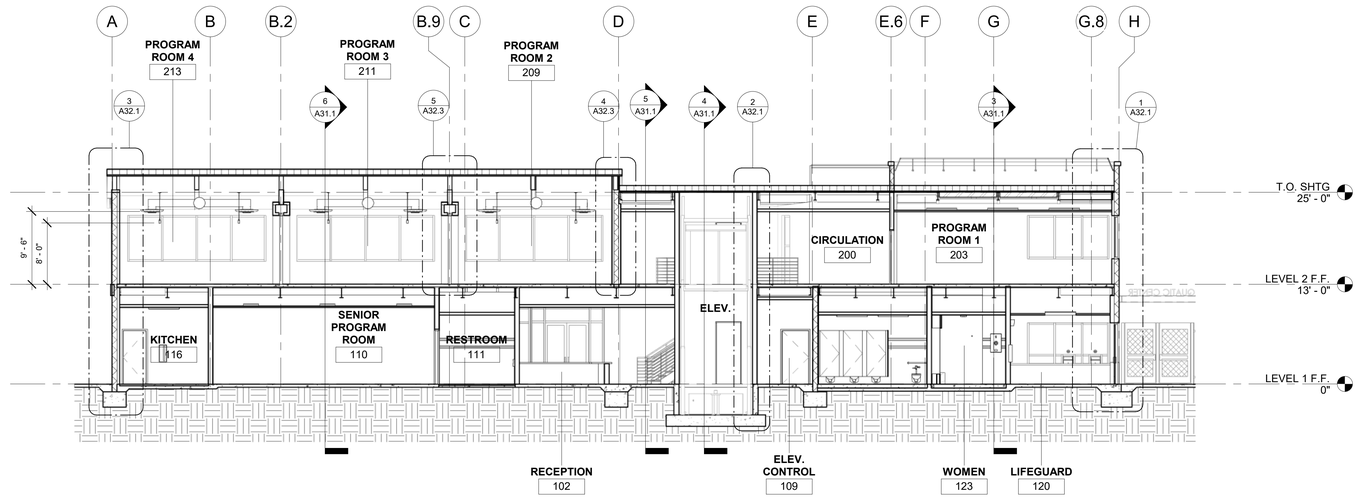

SECTION 2 1/8" = 1'-0" **2**

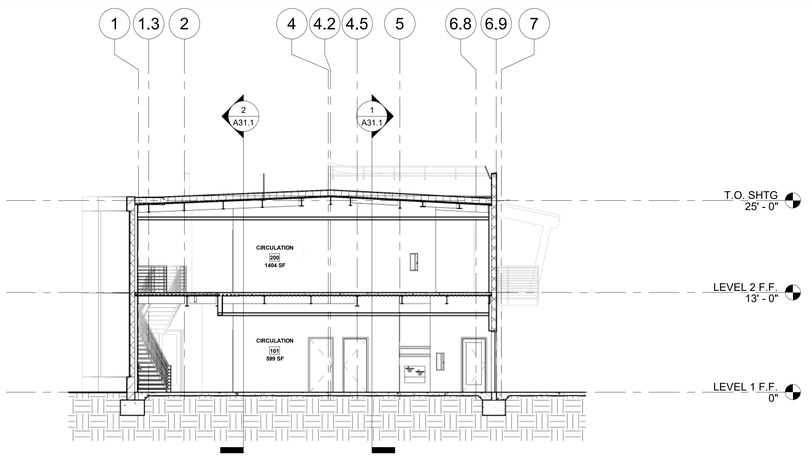

SECTION 5 1/8" = 1'-0" **5**

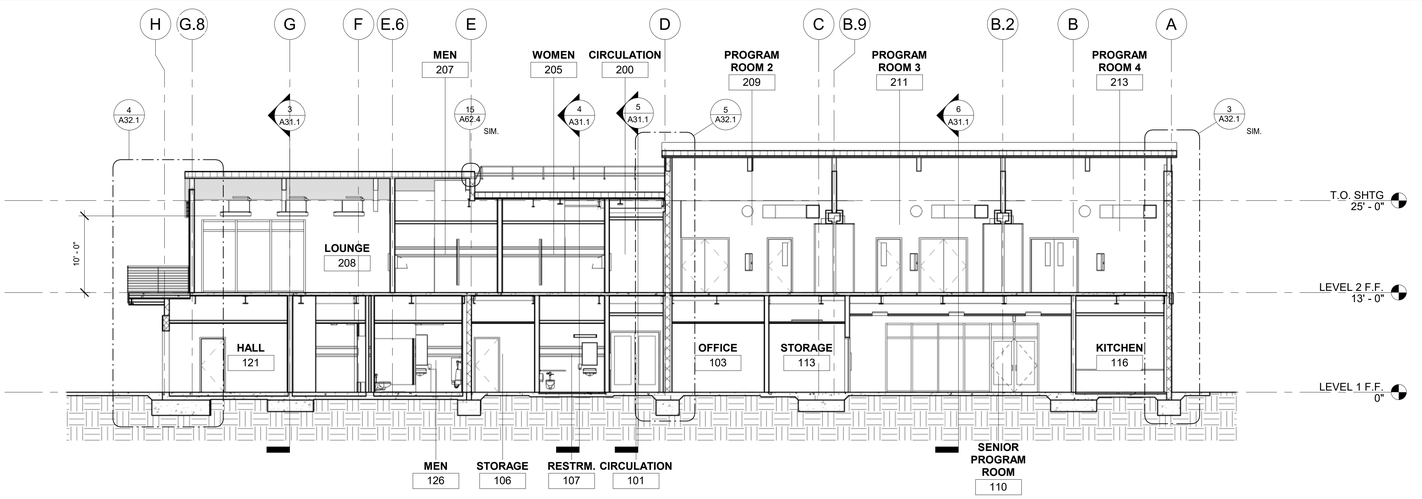

SECTION 1 1/8" = 1'-0" **1**

CITY OF GARDENA
FREEWAY CITY
INCORPORATED 1930

PREPARED BY:
SVA ARCHITECTS
6 HUTTON CENTRE DR, SUITE 1150
SANTA ANA, CA 92707
T 949.809.3380 WWW.SVA-ARCHITECTS.COM

THIS DOCUMENT CONTAINS INFORMATION PROPRIETARY TO SVA ARCHITECTS INC. AND IS FURNISHED IN CONFIDENCE FOR THE LIMITED PURPOSE OF EVALUATION, BIDDING OR REVIEW. THIS DOCUMENT OR ITS CONTENTS MAY NOT BE USED FOR ANY OTHER PURPOSE AND MAY NOT BE REPRODUCED OR DISCLOSED TO OTHERS WITHOUT THE PRIOR WRITTEN CONSENT OF SVA ARCHITECTS INC. ALL RIGHTS RESERVED. © COPYRIGHT 2016.

LICENSED ARCHITECT
ROBERT M. SIMMONS
No. C-18001
JAN 31, 2025
STATE OF CALIFORNIA

REVISIONS

NO.	DESCRIPTION	DATE	APPROVED
1	90% CD SUBMITTAL	12/15/2022	
2	100% CD SUBMITTAL	05/01/2023	
3	FINAL SUBMITTAL	06/30/2023	

B.M.: THE CITY OF GARDENA BENCHMARK NO. SD-15
ELEV. = 43.508'

CITY OF GARDENA
DEPARTMENT OF PUBLIC WORKS - ENGINEERING

BUILDING SECTIONS

COMMUNITY AQUATICS & SENIOR CENTER
A31.1

	INITIAL	DATE	APPROVED BY:
DESIGNED BY	AP/EC	05/25/2022	
DRAWN BY	NC	06/20/23	
CHECKED BY	DB	06/29/23	DIRECTOR OF PUBLIC WORKS

SHT. 53 OF 195 DWG. NO. 5-2606

COMMUNITY AQUATICS AND SENIOR CENTER – CITY SUBMITTAL SET

PLOT DATE: 6/13/2023 9:37:23 AM
PLOT BY: Nick Cabrera
PLOT FILE: G:\Projects\2021\21-0xx\21-035 Gardena Community Pool and Senior Center_dbase\Arch\Construction Sheets\A-sheets\A31.1.dwg

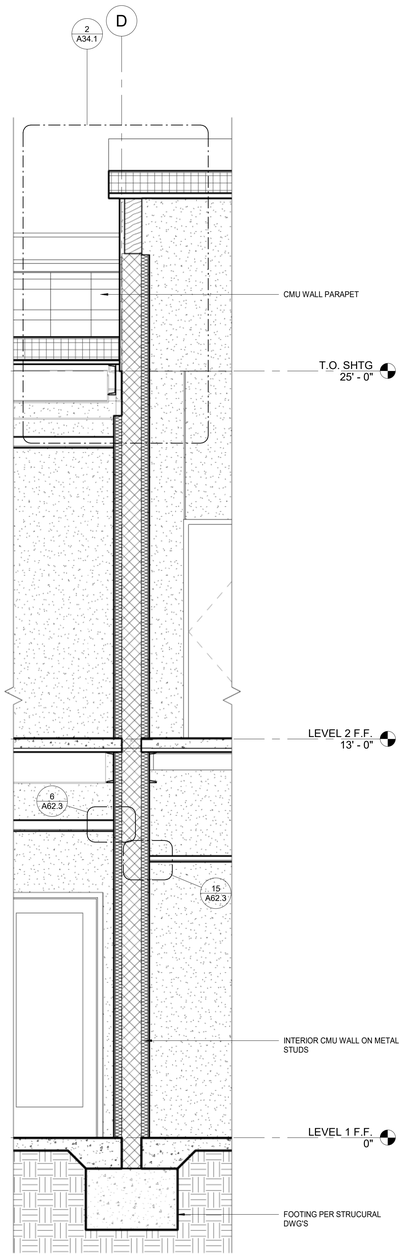

WALL SECTION 5 1/2" = 1'-0" **5**

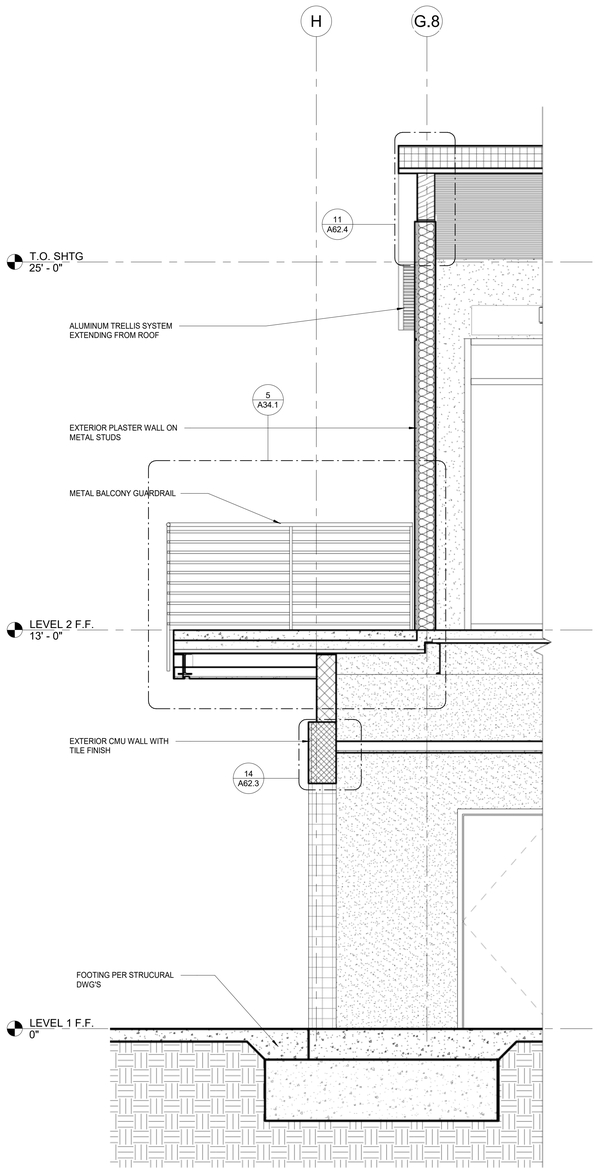

WALL SECTION 4 1/2" = 1'-0" **4**

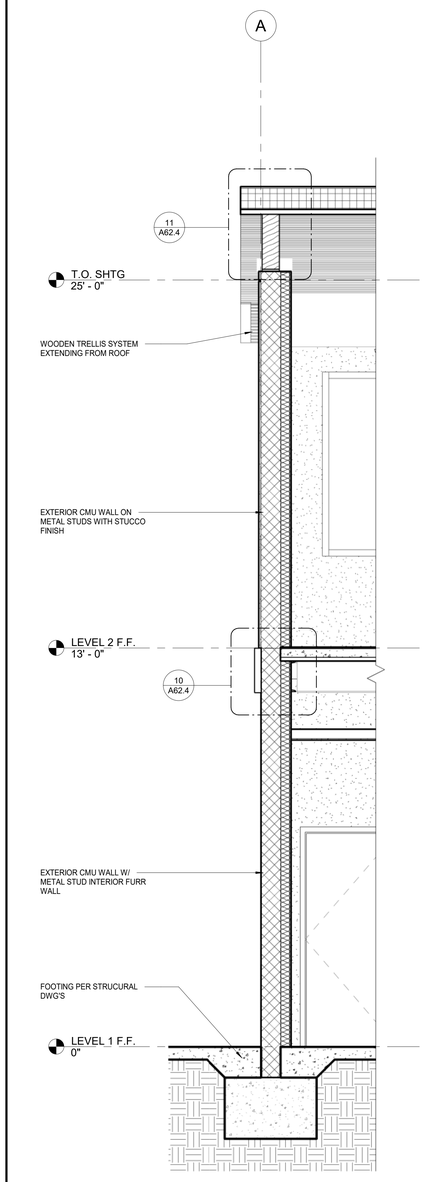

WALL SECTION 3 1/2" = 1'-0" **3**

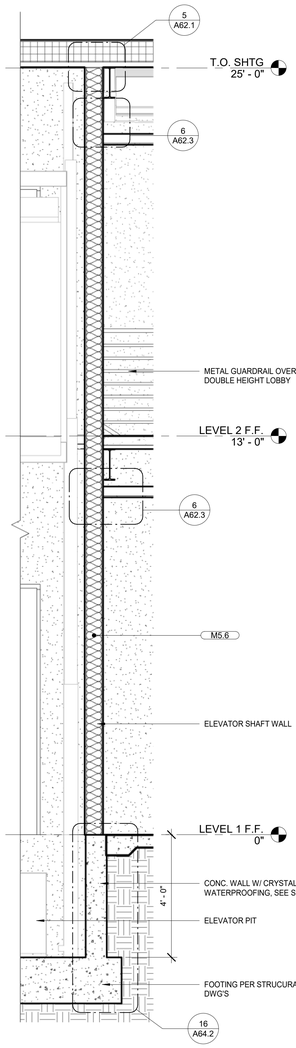

WALL SECTION 2 1/2" = 1'-0" **2**

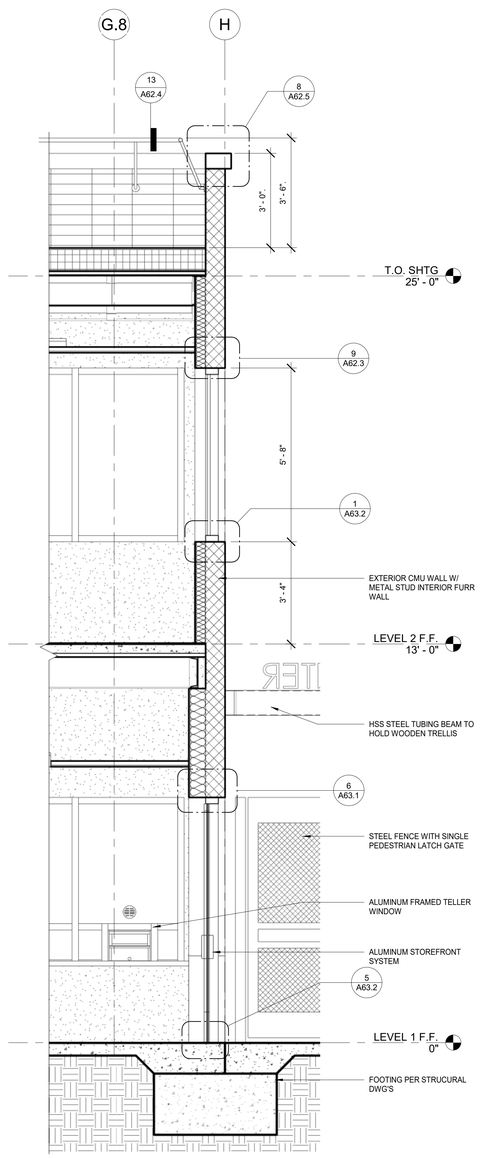

WALL SECTION 1 1/2" = 1'-0" **1**

CARDENA COMMUNITY AQUATICS AND SENIOR CENTER - CITY SUBMITTAL SET

PREPARED BY:

SVA ARCHITECTS
6 HUTTON CENTRE DR, SUITE 1150
SANTA ANA, CA 92707
T 949.809.3380 WWW.SVA-ARCHITECTS.COM

THIS DOCUMENT CONTAINS INFORMATION PROPRIETARY TO SVA ARCHITECTS INC. AND IS FURNISHED IN CONFIDENCE FOR THE LIMITED PURPOSE OF EVALUATION, BIDDING OR REVIEW. THIS DOCUMENT OR ITS CONTENTS MAY NOT BE USED FOR ANY OTHER PURPOSE AND MAY NOT BE REPRODUCED OR DISCLOSED TO OTHERS WITHOUT THE PRIOR WRITTEN CONSENT OF SVA ARCHITECTS INC. ALL RIGHTS RESERVED. © COPYRIGHT 2015.

REGISTERED ARCHITECT ROBERT M. SIMMONS No. C-17651 JAN. 31, 2025 STATE OF CALIFORNIA

REVISIONS

NO.	DESCRIPTION	DATE	APPROVED
1	90% CD SUBMITTAL	12/15/2022	
2	100% CD SUBMITTAL	04/01/2023	
3	FINAL SUBMITTAL	06/30/2023	

B.M.: THE CITY OF GARDENA BENCHMARK NO. SD-15 ELEV. = 43.508'

	INITIAL	DATE
DESIGNED BY	AP/EC	05/25/2022
DRAWN BY	NC	06/20/23
CHECKED BY	DB	06/29/23

APPROVED BY:

APPROVED BY: DIRECTOR OF PUBLIC WORKS

CITY OF GARDENA
DEPARTMENT OF PUBLIC WORKS - ENGINEERING

WALL SECTIONS

COMMUNITY AQUATICS & SENIOR CENTER

A32.1

SHT. 54 OF 195 DWG. NO. 5-2606

PLOT DATE: 6/30/2023 10:00:00 AM
FILE NAME: S:\2021\21-0001 Gardena Community Pool and Senior Center_dbp\working\A32.1.wall.vert

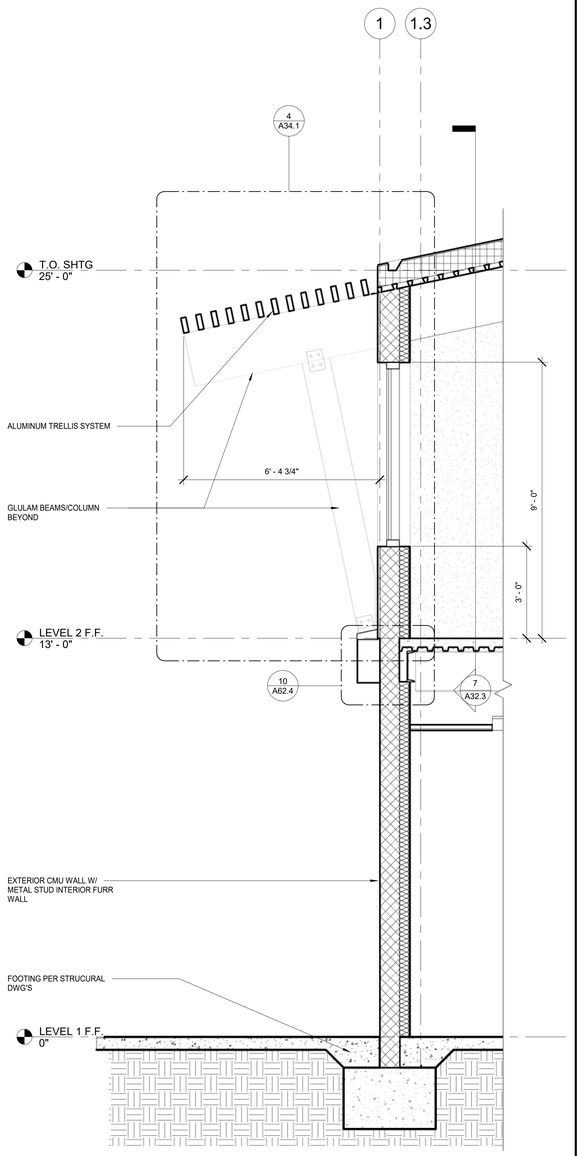

WALL SECTION 9 | 1/2" = 1'-0" | 4

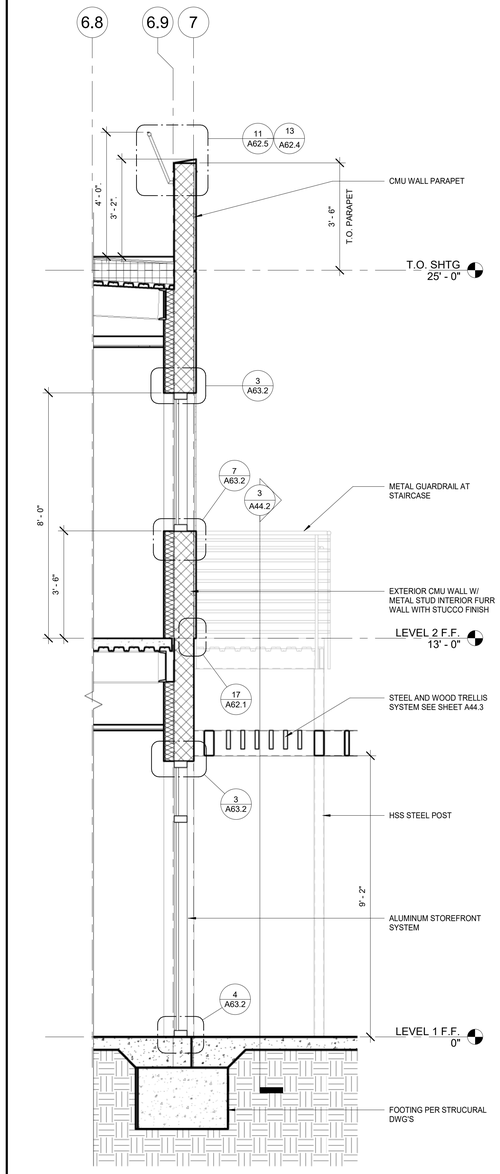

WALL SECTION 8 | 1/2" = 1'-0" | 3

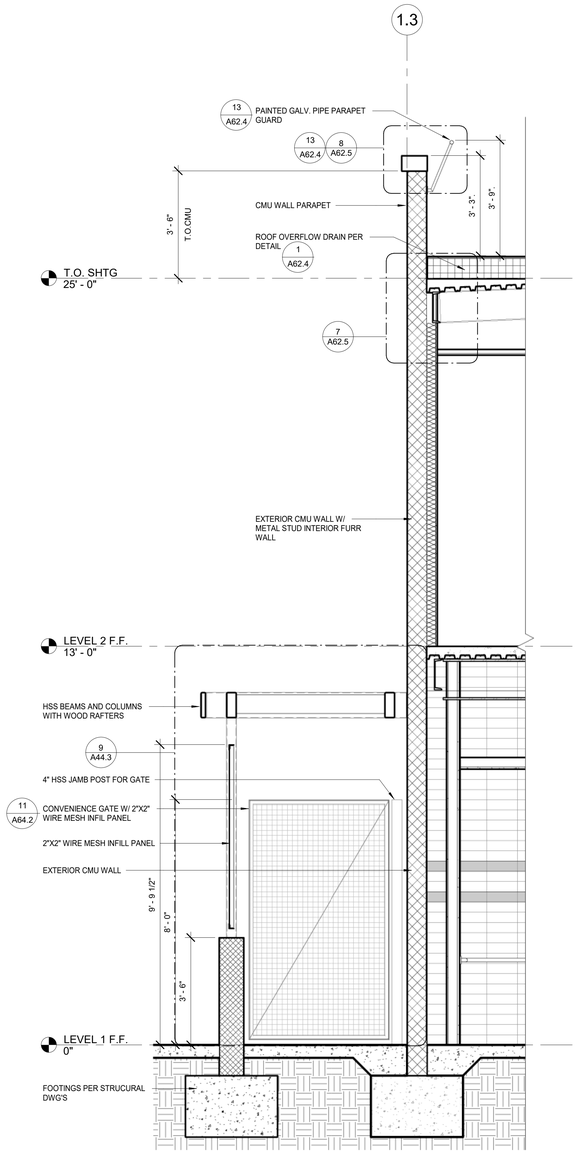

WALL SECTION 7 | 1/2" = 1'-0" | 2

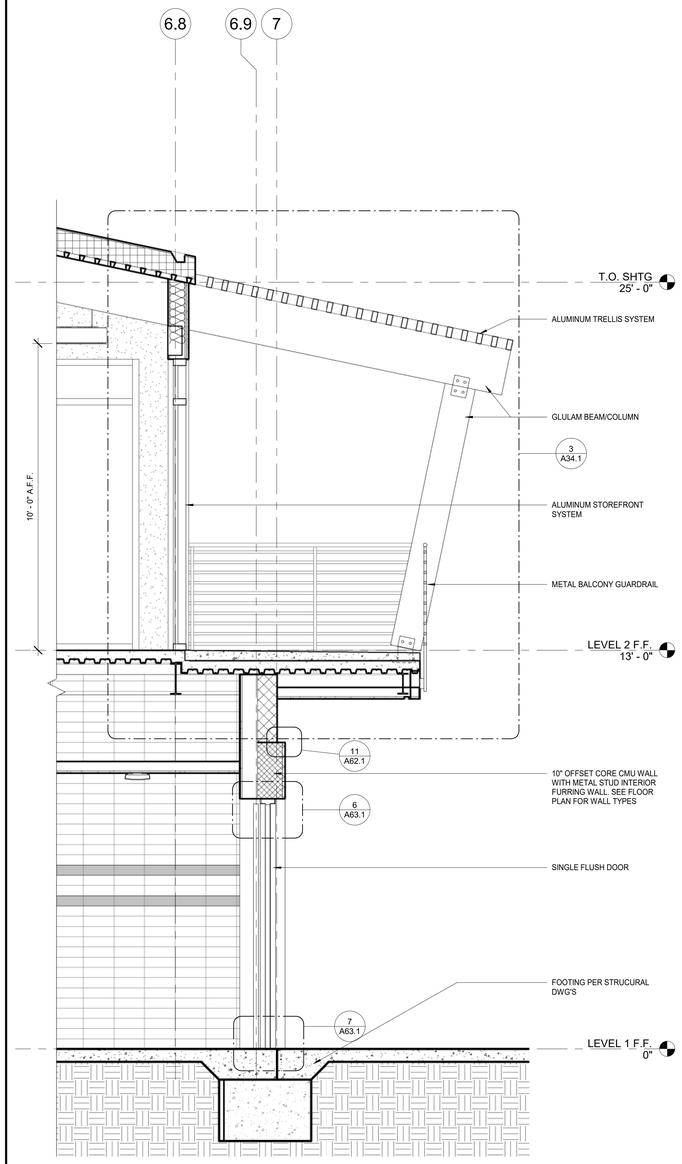

WALL SECTION 6 | 1/2" = 1'-0" | 1

CARDENA COMMUNITY AQUATICS AND SENIOR CENTER - CITY SUBMITTAL SET

CITY OF GARDENA
INCORPORATED 1930

PREPARED BY:
SVA ARCHITECTS
6 HUTTON CENTRE DR, SUITE 1150
SANTA ANA, CA 92707
T 949.809.3380 WWW.SVA-ARCHITECTS.COM

THIS DOCUMENT CONTAINS INFORMATION PROPRIETARY TO SVA ARCHITECTS, INC. AND IS INFORMATION IN CONFIDENCE FOR THE LIMITED PURPOSE OF EVALUATION, BIDDING OR REVIEW. THIS DOCUMENT OR ITS CONTENTS MAY NOT BE USED FOR ANY OTHER PURPOSE AND MAY NOT BE REPRODUCED OR DISCLOSED TO OTHERS WITHOUT THE PRIOR WRITTEN CONSENT OF SVA ARCHITECTS INC. ALL RIGHTS RESERVED, © COPYRIGHT 2018.

LICENSED ARCHITECT
ROBERT M. SIMPSON
No. C-17651
JAN. 31, 2025
STATE OF CALIFORNIA

REVISIONS

NO.	DESCRIPTION	DATE	APPROVED
1	90% CD SUBMITTAL	12/15/2022	
2	100% CD SUBMITTAL	05/01/2023	
3	FINAL SUBMITTAL	06/30/2023	

B.M.: THE CITY OF GARDENA BENCHMARK NO. SD-15
ELEV. = 43.508'

CITY OF GARDENA
DEPARTMENT OF PUBLIC WORKS - ENGINEERING

WALL SECTIONS

COMMUNITY AQUATICS & SENIOR CENTER

A32.2

	INITIAL	DATE	APPROVED BY:
DESIGNED BY	AP/EC	05/25/2022	
DRAWN BY	NC	06/20/23	
CHECKED BY	DB	06/29/23	DIRECTOR OF PUBLIC WORKS

SHT. 55 OF 195 DWG. NO. 5-2606

PLOT DATE: 6/30/2023 8:55 AM
FILE NAME: G:\Projects\Gardena Community Pool and Senior Center_dbrewer\New projects\Gardena_Community Pool and Senior Center_dbrewer\New projects\A32.2.dwg

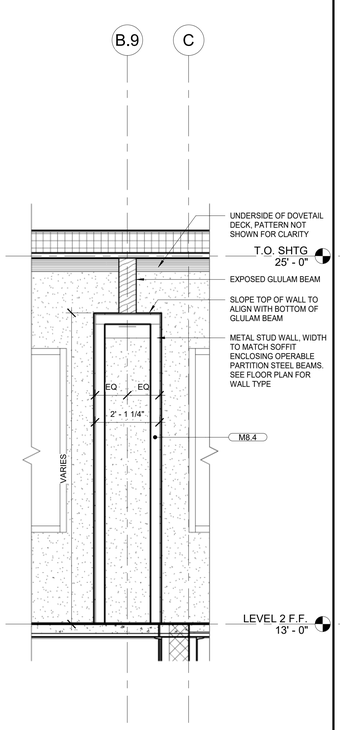

WALL SECTION 15 | 1/2" = 1'-0" | 7

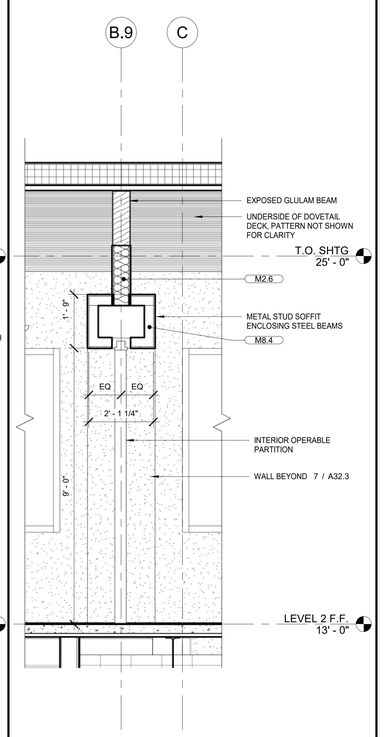

WALL SECTION 13 | 1/2" = 1'-0" | 5

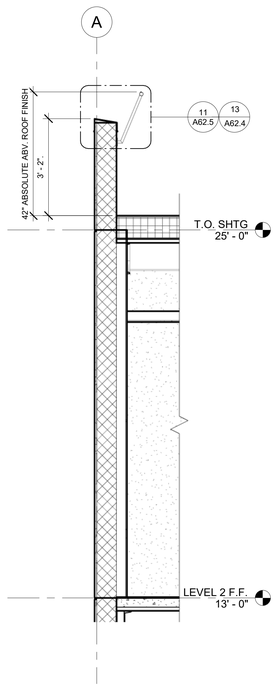

WALL SECTION 16 | 1/2" = 1'-0" | 6

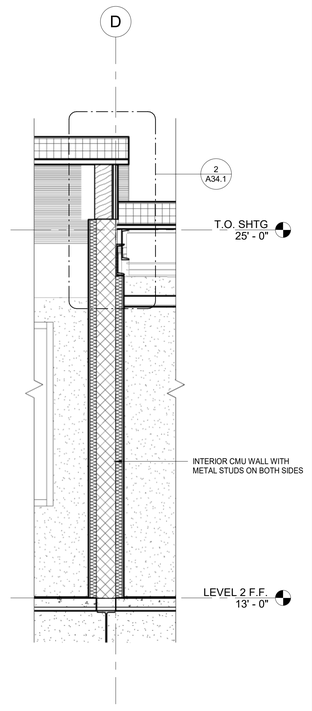

WALL SECTION 14 | 1/2" = 1'-0" | 4

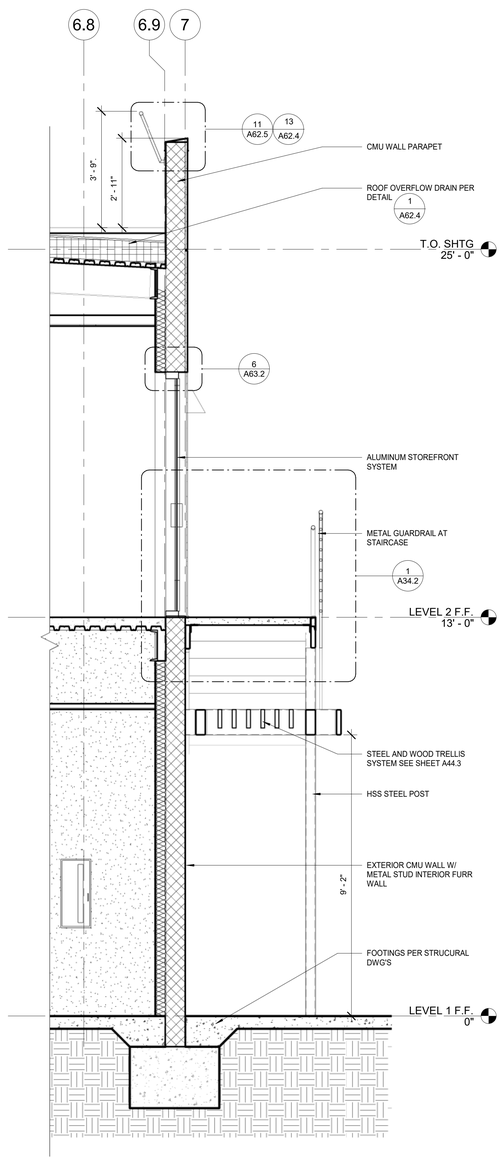

WALL SECTION 12 | 1/2" = 1'-0" | 3

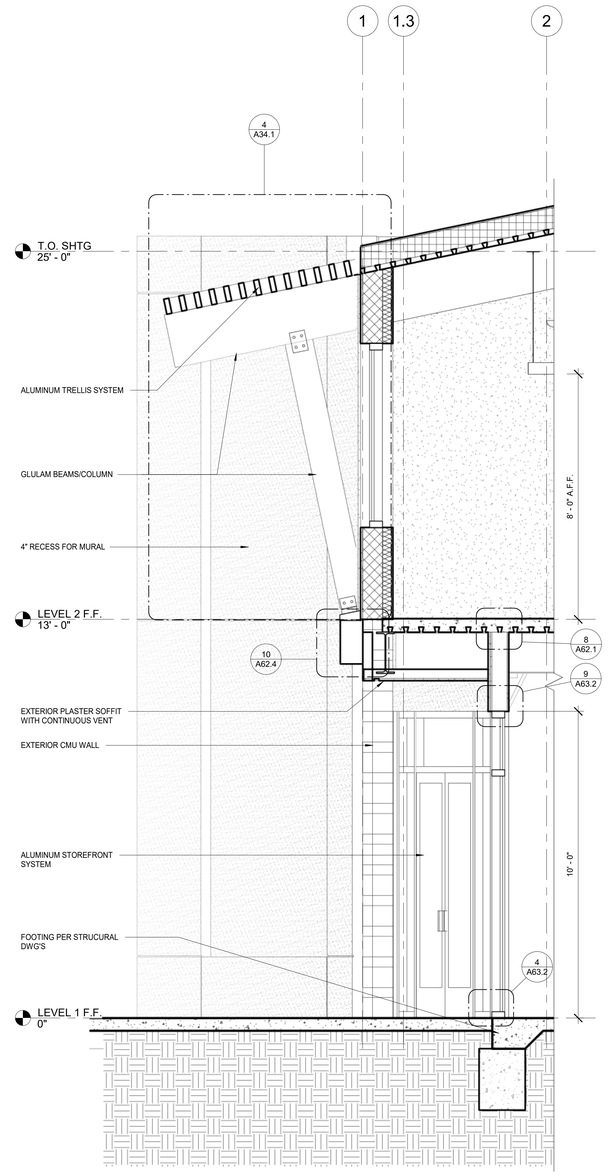

WALL SECTION 11 | 1/2" = 1'-0" | 2

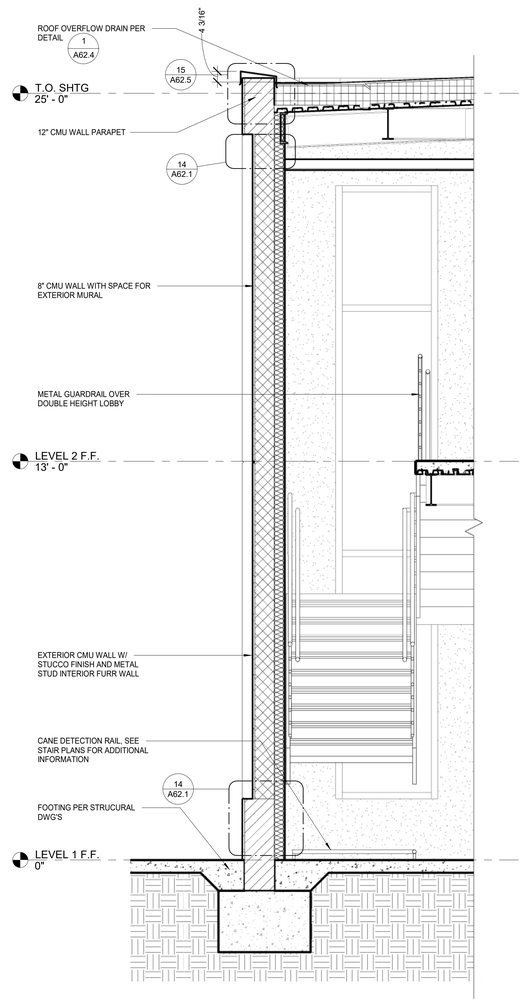

WALL SECTION 10 | 1/2" = 1'-0" | 1

CITY OF GARDENA · INCORPORATED 1930

PREPARED BY:

SVA ARCHITECTS

6 HUTTON CENTRE DR, SUITE 1150
SANTA ANA, CA 92707
T 949.809.3380 WWW.SVA-ARCHITECTS.COM

THIS DOCUMENT CONTAINS INFORMATION PROPRIETARY TO SVA ARCHITECTS INC. AND IS FURNISHED IN CONFIDENCE FOR THE LIMITED PURPOSE OF EVALUATION, BIDDING OR REVIEW. THIS DOCUMENT OR ITS CONTENTS MAY NOT BE USED FOR ANY OTHER PURPOSE AND MAY NOT BE REPRODUCED OR DISCLOSED TO OTHERS WITHOUT THE PRIOR WRITTEN CONSENT OF SVA ARCHITECTS INC. ALL RIGHTS RESERVED. © COPYRIGHT 2016.

LICENSED ARCHITECT · ROBERT M. SIMPSON · No. C-18801 · JAN. 31, 2025 · STATE OF CALIFORNIA

REVISIONS

NO.	DESCRIPTION	DATE	APPROVED
1	90% CD SUBMITTAL	12/15/2022	
2	100% CD SUBMITTAL	05/01/2023	
3	FINAL SUBMITTAL	06/30/2023	

B.M.: THE CITY OF GARDENA BENCHMARK NO. SD-15
ELEV. = 43.508'

CITY OF GARDENA
DEPARTMENT OF PUBLIC WORKS - ENGINEERING

WALL SECTIONS

COMMUNITY AQUATICS & SENIOR CENTER

A32.3

	INITIAL	DATE
DESIGNED BY	AP/EC	05/25/2022
DRAWN BY	NC	06/20/23
CHECKED BY	DB	06/29/23

APPROVED BY:

APPROVED BY: DIRECTOR OF PUBLIC WORKS

SHT. 56 OF 195 DWG. NO. 5-2606

CARDENA COMMUNITY AQUATICS AND SENIOR CENTER – CITY SUBMITTAL SET

PLOT DATE: 6/30/2023 9:00:00 AM
PLOT BY: Nicholas Cruz
PLOT NAME: G:\Projects\Gardena Aquatics\Gardena Documents\Gardena Community Pool and Senior Center -Bim and Revit Files\Revit Central Files\Gardena Community Pool and Senior Center_detach_Nicholas.Cruz.rvt

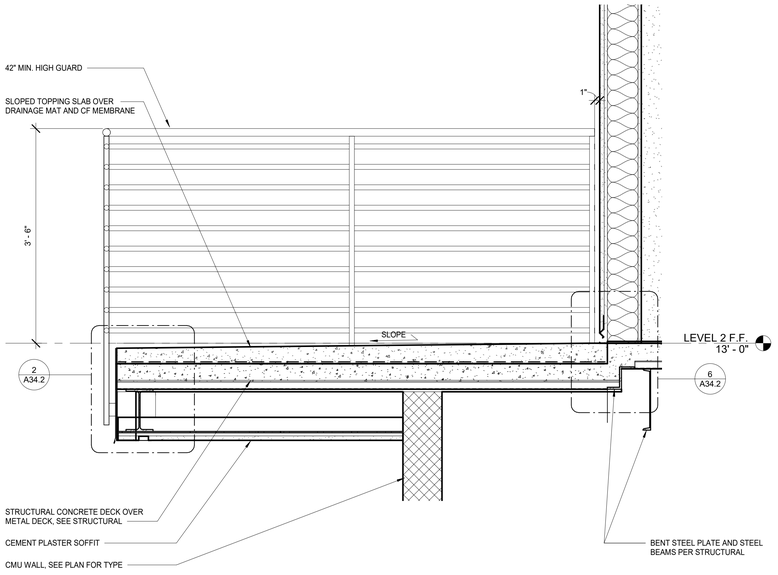

ASSEMBLY 5 | 1" = 1'-0" | **5**

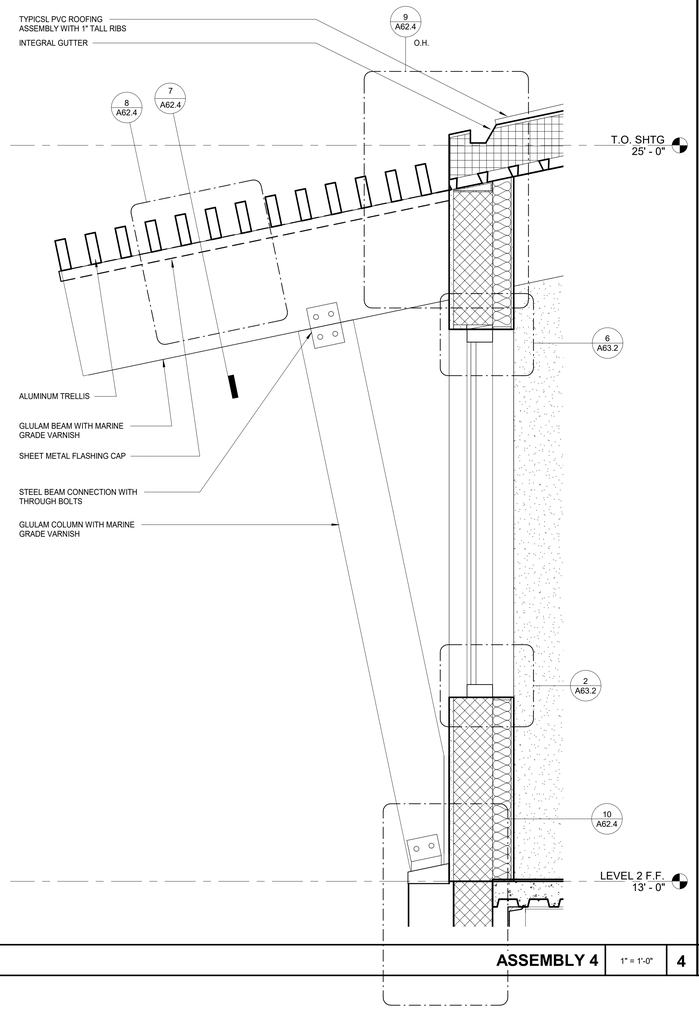

ASSEMBLY 4 | 1" = 1'-0" | **4**

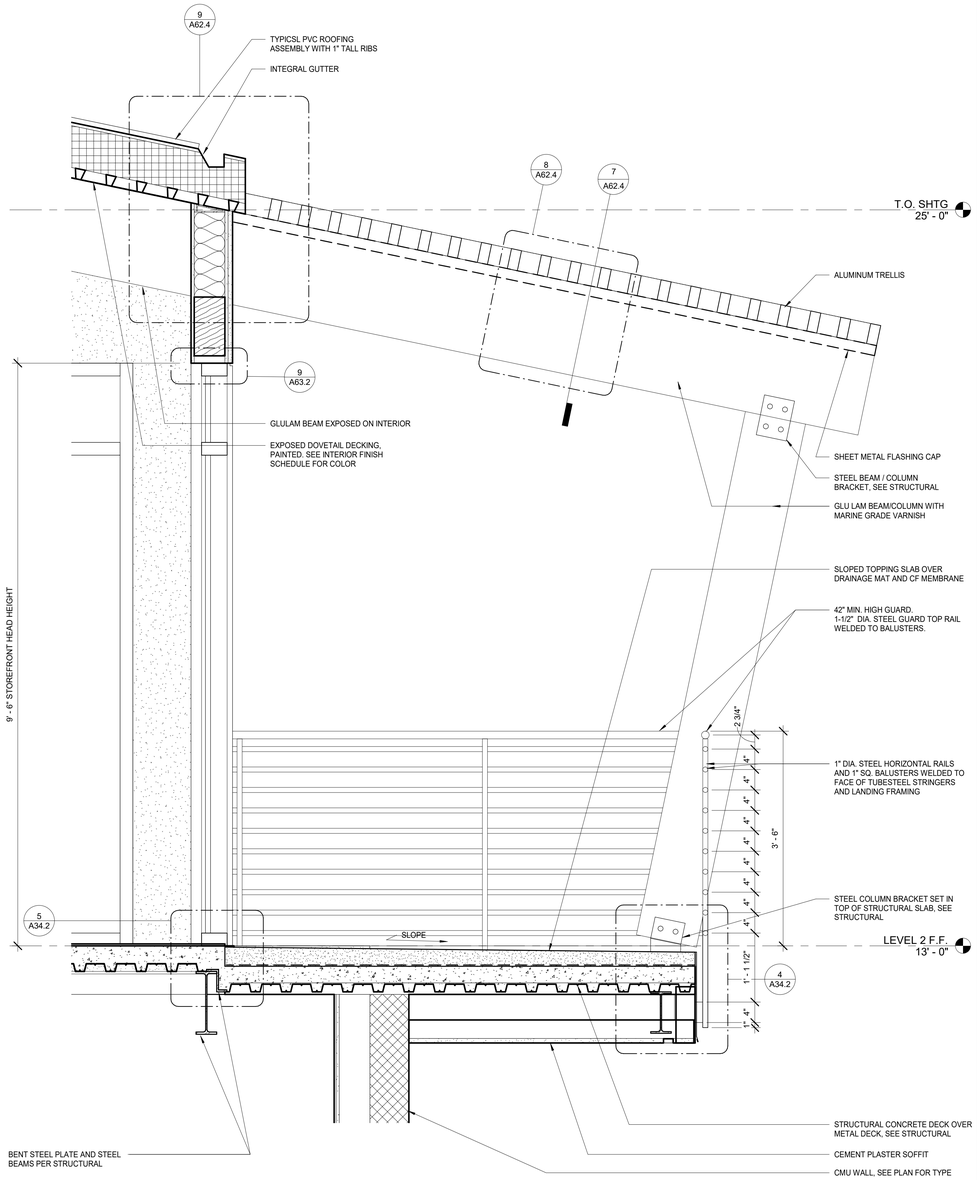

ASSEMBLY 3 | 1" = 1'-0" | **3**

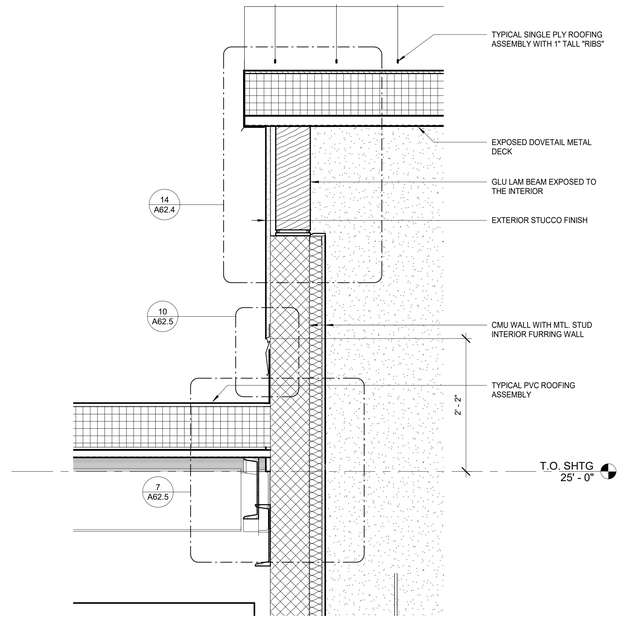

ASSEMBLY 2 | 1" = 1'-0" | **2**

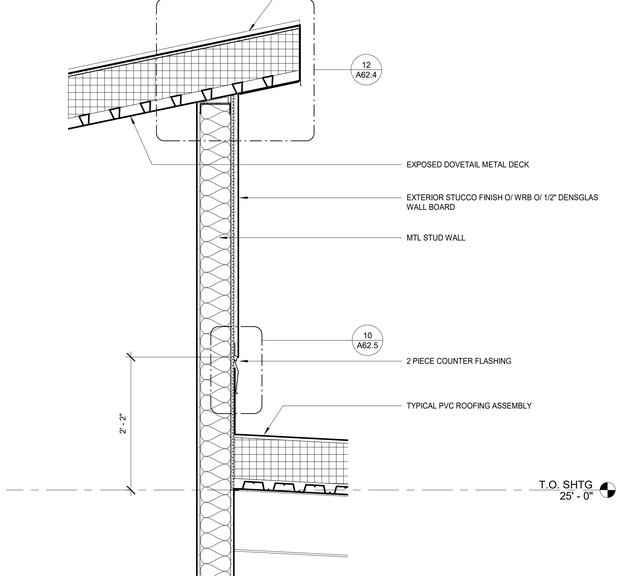

ASSEMBLY 1 | 1" = 1'-0" | **1**

CARDENA COMMUNITY AQUATICS AND SENIOR CENTER - CITY SUBMITTAL SET

CITY OF GARDENA — INCORPORATED 1930

PREPARED BY:
SVA ARCHITECTS
6 HUTTON CENTRE DR, SUITE 1150
SANTA ANA, CA 92707
T 949.809.3380 WWW.SVA-ARCHITECTS.COM

THIS DOCUMENT CONTAINS INFORMATION PROPRIETARY TO SVA ARCHITECTS INC. AND IS FURNISHED IN CONFIDENCE FOR THE LIMITED PURPOSE OF EVALUATION, BIDDING OR REVIEW. THIS DOCUMENT OR ITS CONTENTS MAY NOT BE USED FOR ANY OTHER PURPOSE AND MAY NOT BE REPRODUCED OR DISCLOSED TO OTHERS WITHOUT THE PRIOR WRITTEN CONSENT OF SVA ARCHITECTS INC. ALL RIGHTS RESERVED. © COPYRIGHT 2016.

LICENSED ARCHITECT — ROBERT M. SIMPSON — No. C-18801 — JAN 31, 2025 — STATE OF CALIFORNIA

REVISIONS

NO.	DESCRIPTION	DATE	APPROVED
1	90% CD SUBMITTAL	12/15/2022	
2	100% CD SUBMITTAL	05/01/2023	
3	FINAL SUBMITTAL	06/30/2023	

B.M.: THE CITY OF GARDENA BENCHMARK NO. SD-15 ELEV. = 43.508'

CITY OF GARDENA

DEPARTMENT OF PUBLIC WORKS - ENGINEERING

ASSEMBLIES

COMMUNITY AQUATICS & SENIOR CENTER

A34.1

	INITIAL	DATE	APPROVED BY:
DESIGNED BY	AP/EC	05/25/2022	
DRAWN BY	NC	06/20/23	APPROVED BY: DIRECTOR OF PUBLIC WORKS
CHECKED BY	DB	06/29/23	

SHT. 57 OF 195 DWG. NO. 5-2606

PLOT DATE: 6/30/2023 9:20:44 AM
PLOT BY: C:\Users\nicole\Documents\Gardena Community Pool and Senior Center_dbsvaarchitects.com-NicoleLopez.rvt

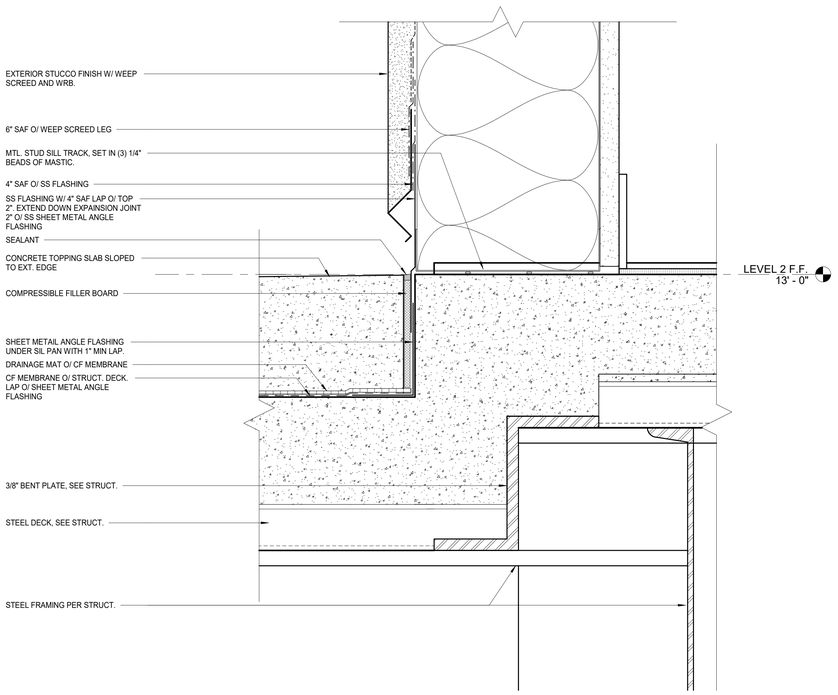

TOPPING SLAB AT EXT. WALL

6" = 1'-0" | 6

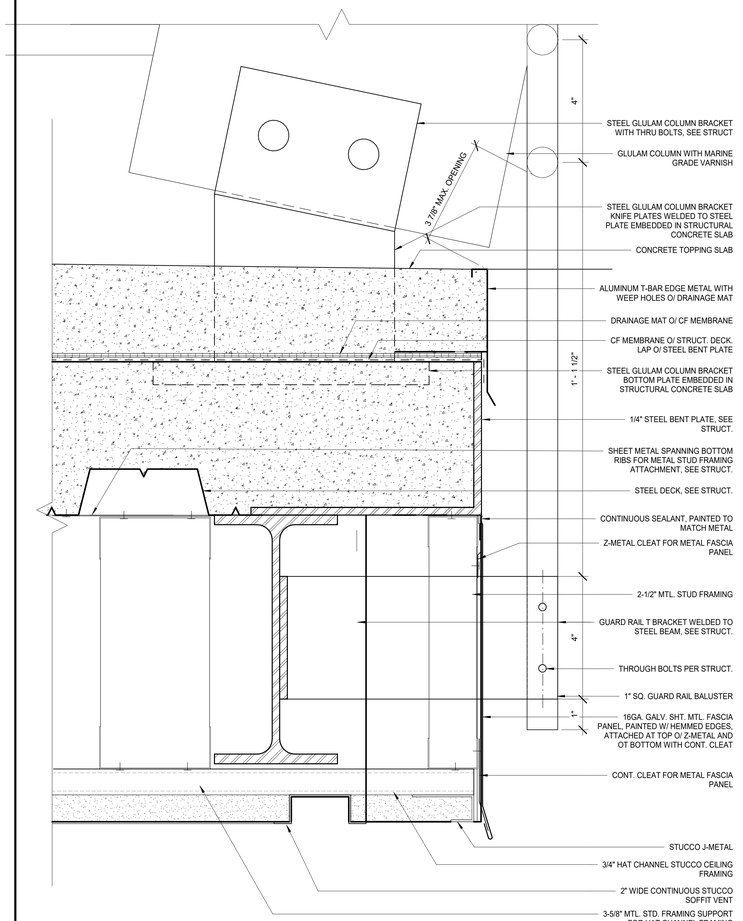

BALCONY EDGE SOUTH SIDE

6" = 1'-0" | 4

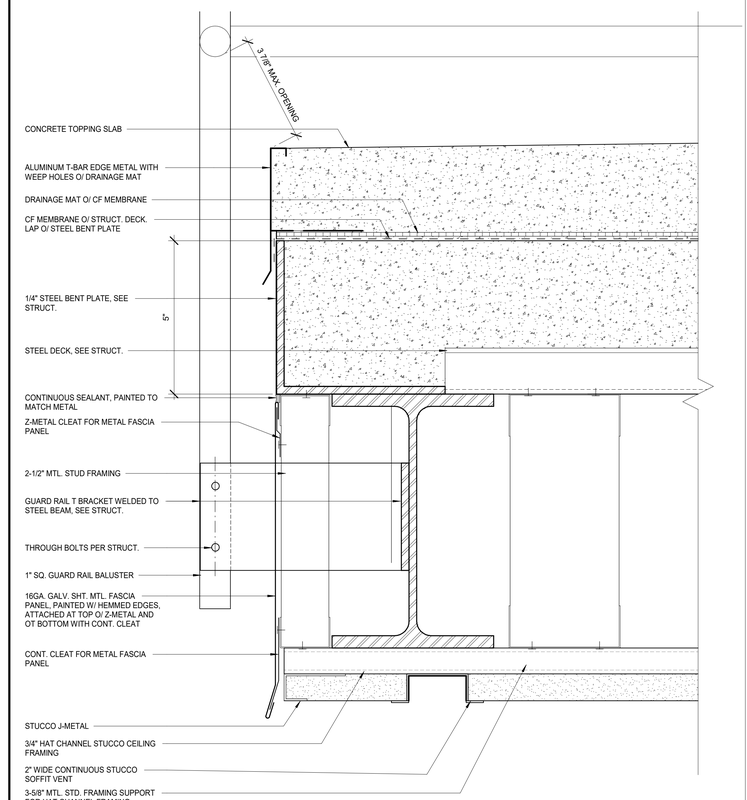

BALCONY EDGE

6" = 1'-0" | 2

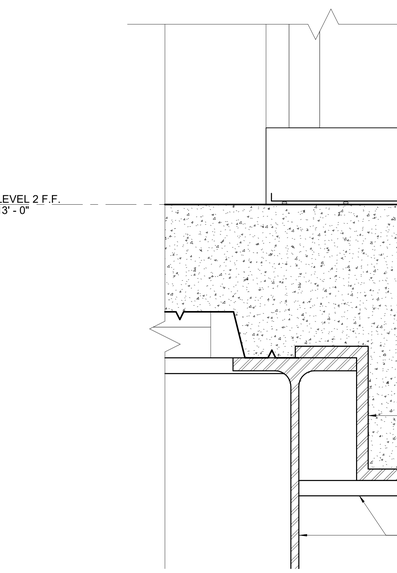

TOPPING SLAB AT STOREFRONT

6" = 1'-0" | 5

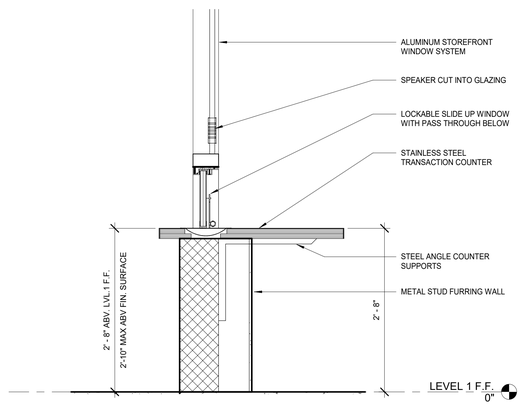

TRANSACTION WINDOW

1" = 1'-0" | 3

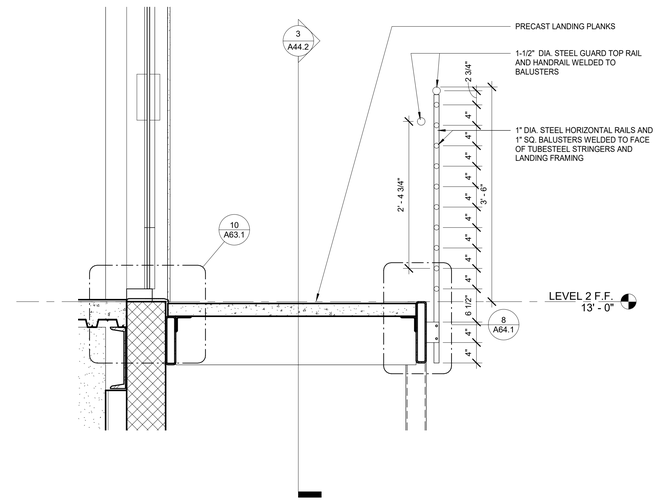

EXTERIOR STAIR LANDING

1" = 1'-0" | 1

CITY OF GARDENA
"A MUNICIPAL CORP."
INCORPORATED 1930

PREPARED BY:
SVA ARCHITECTS
6 HUTTON CENTRE DR, SUITE 1150
SANTA ANA, CA 92707
T 949.809.3380 WWW.SVA-ARCHITECTS.COM

THIS DOCUMENT CONTAINS INFORMATION PROPRIETARY TO SVA ARCHITECTS INC. AND IS FURNISHED IN CONFIDENCE FOR THE LIMITED PURPOSE OF EVALUATION, BIDDING OR REVIEW. THIS DOCUMENT OR ITS CONTENTS MAY NOT BE USED FOR ANY OTHER PURPOSE AND MAY NOT BE REPRODUCED OR DISCLOSED TO OTHERS WITHOUT THE PRIOR WRITTEN CONSENT OF SVA ARCHITECTS INC. ALL RIGHTS RESERVED. © COPYRIGHT 2015.

LICENSED ARCHITECT
ROBERT M. SIMONS
No. C-17651
JAN. 31, 2025
STATE OF CALIFORNIA

REVISIONS

NO.	DESCRIPTION	DATE	APPROVED
1	90% CD SUBMITTAL	12/15/2022	
2	100% CD SUBMITTAL	05/01/2023	
3	FINAL SUBMITTAL	06/30/2023	

B.M.: THE CITY OF GARDENA BENCHMARK NO. SD-15 ELEV. = 43.508'

CITY OF GARDENA
DEPARTMENT OF PUBLIC WORKS - ENGINEERING
ASSEMBLIES
COMMUNITY AQUATICS & SENIOR CENTER
A34.2

	INITIAL	DATE
DESIGNED BY	AP/RC	05/25/2022
DRAWN BY	NC	06/20/23
CHECKED BY	DB	06/29/23

APPROVED BY:
APPROVED BY: DIRECTOR OF PUBLIC WORKS
SHT. 58 OF 195 DWG. NO. S-2606

CARDENA COMMUNITY AQUATICS AND SENIOR CENTER - CITY SUBMITTAL SET
PLOT DATE: 6/13/2023 8:00:00 AM
FILE NAME: G:\Projects\Gardena\Gardena Community Pool and Senior Center_Alexandria.sandbox.rvt

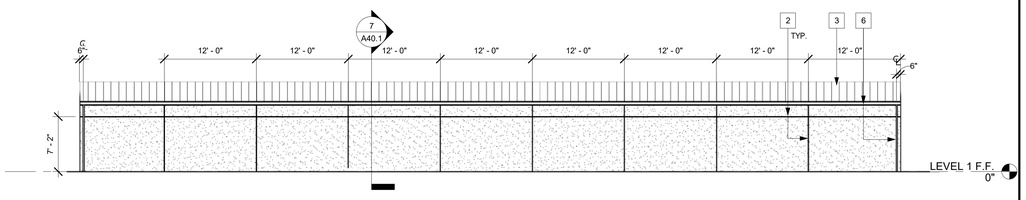

POOL BUILDING SOUTH ELEVATION | 1/8" = 1'-0" | 10

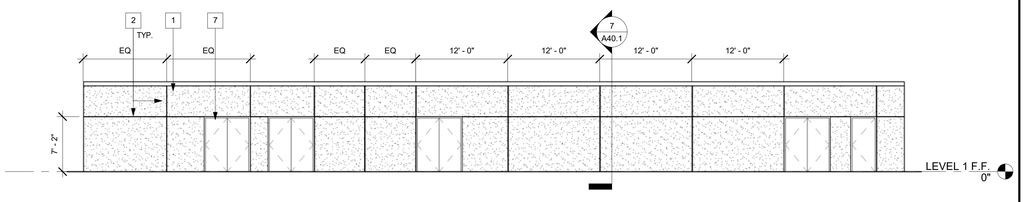

POOL BUILDING NORTH ELEVATION | 1/8" = 1'-0" | 9

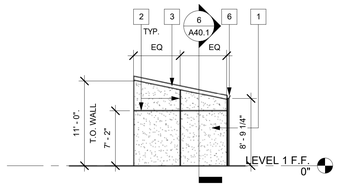

POOL BUILDING WEST ELEVATION | 1/8" = 1'-0" | 13

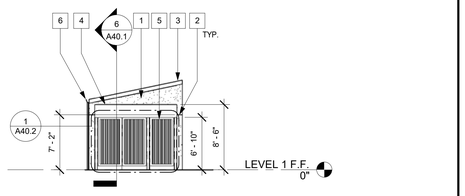

POOL BUILDING EAST ELEVATION | 1/8" = 1'-0" | 8

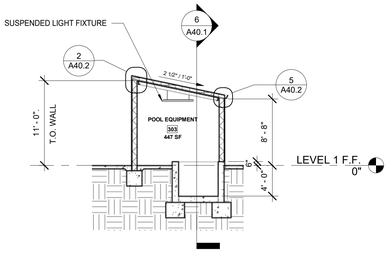

POOL BUILDING SECTION 1 | 1/8" = 1'-0" | 7

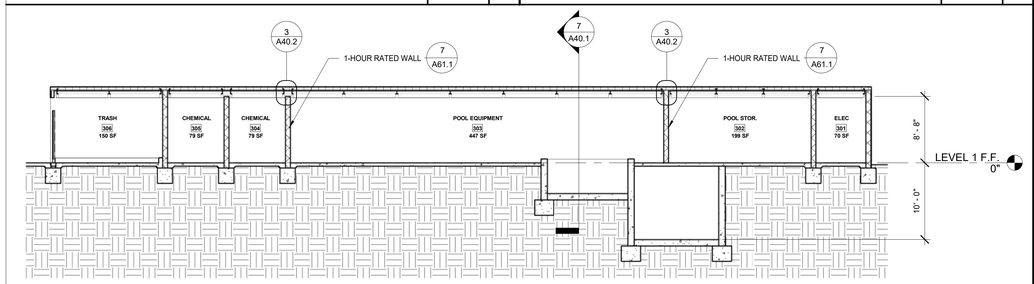

POOL BUILDING SECTION 2 | 1/8" = 1'-0" | 6

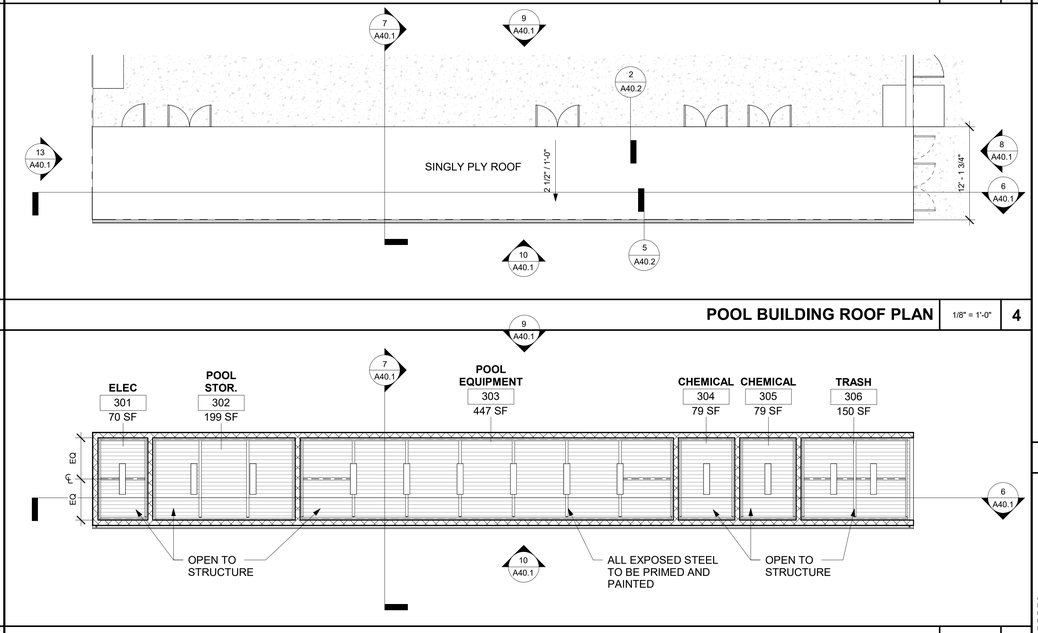

POOL BUILDING ROOF PLAN | 1/8" = 1'-0" | 4

POOL BUILDING RCP | 1/8" = 1'-0" | 3

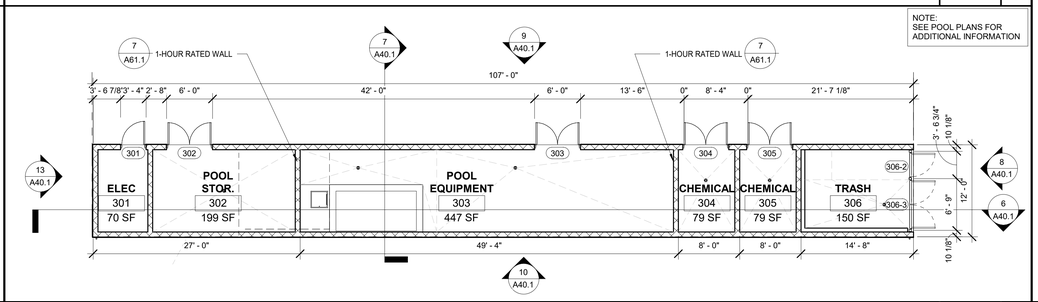

POOL BUILDING FLOOR PLAN | 1/8" = 1'-0" | 2

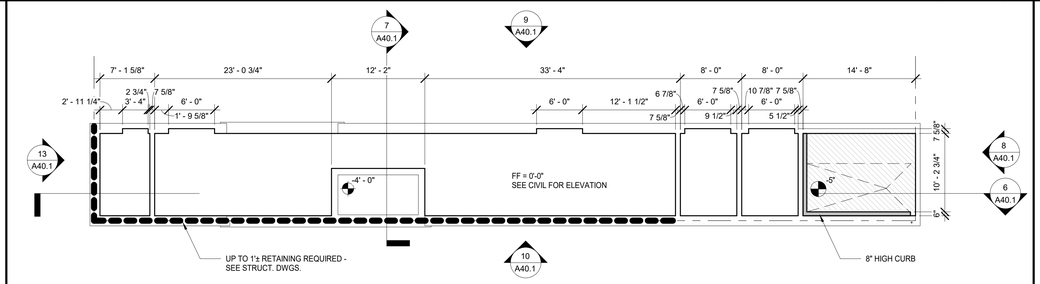

POOL BUILDING SLAB PLAN | 1/8" = 1'-0" | 1

1 STUCCO, PAINTED DUNN EDWARDS DEW380 WARM WHITE
2 EXTERIOR PLASTER CONTROL JOINT
3 SINGLE PLY ROOFING WITH 2" TALL RIBS, DARK GRAY COLOR
4 HSS STEEL FRAME AND SWING GATES, PAINTED DUNN EDWARDS DET695 GRANGE HALL
5 STEEL PEDESTRIAN GATE, PAINTED DUNN EDWARDS DET695 GRANGE HALL
6 METAL GUTTER AND DOWNSPOUTS, PAINTED DUNN EDWARDS DET695 GRANGE HALL
7 HOLLOW METAL DOORS, PAINTED TO MATCH STUCCO

POOL BUILDING ELEVATION KEYNOTES

EXPOSED METAL DECK, PRIMED AND PAINTED

SUSPENDED FLUORESCENT FIXTURE, SEE ELEC. DRAWINGS*

NOTES:
1. AT ALL ROOMS WITHOUT CEILINGS (LABELLED AS "O.T.S" ON PLAN AND/OR ON THE FINISH SCHEDULE), ALL OPEN TO STRUCTURE/EXPOSED SURFACES AND ELEMENTS SHALL BE PAINTED, INCLUDING STRUCTURE, DECK ABOVE, AND ALL UTILITIES INCLUDING PIPING, CONDUITS, DUCTWORK, ETC.
2. PLUMBING, ELECTRICAL, MECHANICAL AND FIRE PROTECTION COMPONENTS ARE SHOWN FOR REFERENCE AND COORDINATION PURPOSES. REFER TO PLUMBING, ELECTRICAL, MECHANICAL AND FIRE PROTECTION DRAWINGS FOR COMPONENT AND SYSTEM QUANTITIES, TYPES AND REQUIREMENTS.
3. CENTER LIGHTING FIXTURES BETWEEN OPPOSITE WALLS, U.N.O.
4. ALL DIMENSIONS, NOTES, KEYNOTES AND DETAILS CALLOUTS ARE TYPICAL, U.N.O.
5. SEE SHEET A50.1 FOR INTERIOR FINISH LEGEND
6. AT EXPOSED CEILINGS, ALL DUCTS, PIPES AND CONDUITS SHALL RUN PARALLEL OR PERPENDICULAR TO WALL, AND AS CLOSE TO THE DECK ABOVE AS POSSIBLE. PROVIDE ESCUTCHEONS FOR CONDUIT/PIPES AT WALLS WHERE EXPOSED.

* REFER TO ELECTRICAL DRAWINGS FOR LOCATIONS OF EMERGENCY LIGHTING.

POOL BUILDING RCP LEGEND

30"X48" CLR. — 30"X48" MIN. ACCESSIBLE WHEELCHAIR CLEAR FLOOR SPACE

60" MIN. CLR. — 60" MIN. ACCESSIBLE WHEELCHAIR CLEAR TURNING SPACE

8" CMU WALL PER SHEET A61.1

10" CMU WALL PER SHEET A61.1

12" CMU WALL PER SHEET A61.1

METAL STUD WALL PER SHEET A61.1

RETAINING WALL - SEE STRUCT. DWGS. FOR ADD'L. INFO.

1| — WALL TYPE ANNOTATIONS, SEE SHEET A61.1 FOR DETAILS

101 — NUMBER INDICATES DOOR PER SCHEDULE, REFER TO SHEET A52.1

1 — NUMBER INDICATED STOREFRONT PER SCHEDULE, REFER TO SHEET A52.2

F.E. — FIRE EXTINGUISHER CABINET PER DET. 3/A65.1

FLOOR PLAN GENERAL NOTES:
1. ALL DIMENSIONS ARE TO CENTERLINE OF THE GRID LINES AND/OR TO THE FACE OF STUDS, U.N.O.
2. UNLESS NOTED OTHERWISE, ALL WALLS ARE FULL HEIGHT.
3. REFER TO SHEET GEN-4 FOR TYPICAL ACCESSIBILITY REQUIREMENTS AND DIMENSIONS.
4. REFER TO ENLARGED PLANS FOR DIMENSIONS AND CALLOUTS NOT SHOWN HERE.

FLOOR PLAN LEGEND

FLOOR ELEVATION MARKER. FLOOR ELEVATIONS BASED ON FF OF 0.0', SEE CIVIL PLANS FOR EXACT ELEVATION

FLOOR DRAIN, SEE PLUMBING PLANS

FINISH FLOOR ELEVATION 43.83, REF. CIVIL FOR ADDITIONAL INFORMATION

SLAB DEPRESSION

6" CURB, TYP. UNLESS NOTED OTHERWISE

FLOOR PLAN GENERAL NOTES:
1. REFER TO CIVIL DRAWINGS FOR FINISH FLOOR ELEVATIONS
2. REFER TO STRUCTURAL DRAWINGS FOR ADDITIONAL SLAB DEPRESSION INFORMATION

SLAB PLAN LEGEND

CITY OF GARDENA INCORPORATED 1930 FREEWAY CITY

PREPARED BY:
SVA ARCHITECTS
6 HUTTON CENTRE DR, SUITE 1150
SANTA ANA, CA 92707
T 949.809.3380 WWW.SVA-ARCHITECTS.COM

THIS DOCUMENT CONTAINS INFORMATION PROPRIETARY TO SVA ARCHITECTS INC. AND IS FURNISHED IN CONFIDENCE FOR THE LIMITED PURPOSE OF EVALUATION, BIDDING OR REVIEW. THIS DOCUMENT OR ITS CONTENTS MAY NOT BE USED FOR ANY OTHER PURPOSE AND MAY NOT BE, REPRODUCED OR DISCLOSED TO OTHERS WITHOUT THE PRIOR WRITTEN CONSENT OF SVA ARCHITECTS INC. ALL RIGHTS RESERVED, © COPYRIGHT 2018.

LICENSED ARCHITECT ROBERT M. SIMMONS No. C-18851 JAN. 31, 2025 STATE OF CALIFORNIA

REVISIONS

NO.	DESCRIPTION	DATE	APPROVED
1	90% CD SUBMITTAL	12/15/2022	
2	100% CD SUBMITTAL	05/01/2023	
3	FINAL SUBMITTAL	06/30/2023	

B.M.: THE CITY OF GARDENA BENCHMARK NO. SD-15 ELEV. = 43.508'

CITY OF GARDENA
DEPARTMENT OF PUBLIC WORKS - ENGINEERING
POOL BUILDING PLANS, ELEVATIONS, AND SECTIONS
COMMUNITY AQUATICS & SENIOR CENTER
A40.1

	INITIAL	DATE
DESIGNED BY	AP/EC	05/25/2022
DRAWN BY	NC	06/20/23
CHECKED BY	DB	06/29/23

APPROVED BY: _____
APPROVED BY: _____ DIRECTOR OF PUBLIC WORKS

SHT. 59 OF 195 DWG. NO. S-2606

CARDENA COMMUNITY AQUATICS AND SENIOR CENTER – CITY SUBMITTAL SET

PLOT DATE: 12/15/2022 8:37:54 AM
PLOT BY: C:\Users\nicolecarter\Documents\Gardena Community Pool and Senior Center_d3kcmn8wnx-architects-com.rvt

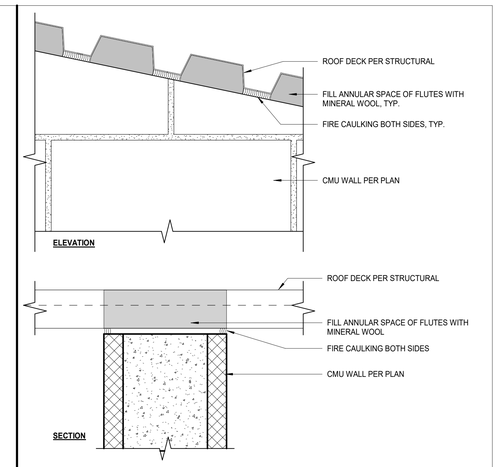

1-HOUR CMU WALL AT ROOF DECK | 3" = 1'-0" | **3**

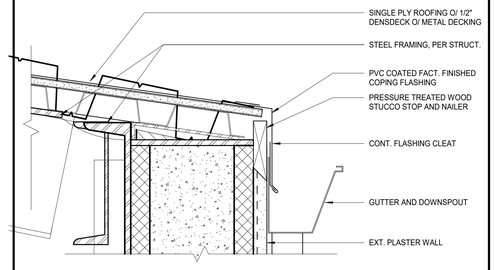

ROOFING EDGE DETAIL WITH GUTTER | 3" = 1'-0" | **5**

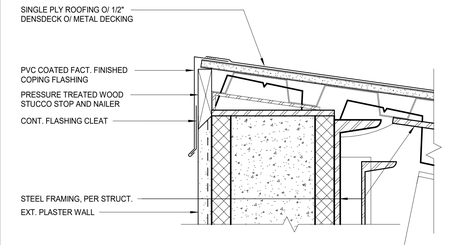

ROOFING RIDGE AT POOL BUILDING | 3" = 1'-0" | **2**

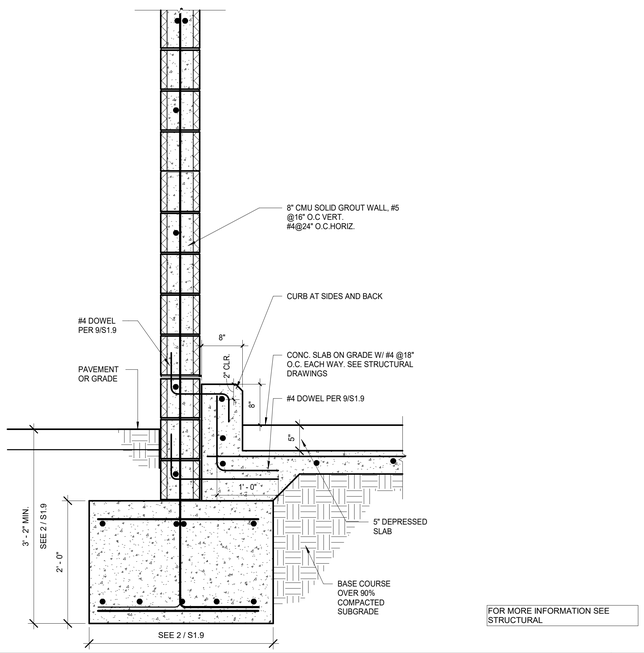

FOR MORE INFORMATION SEE STRUCTURAL

TRASH ENCLOSURE WALL SECTION | 1" = 1'-0" | **10**

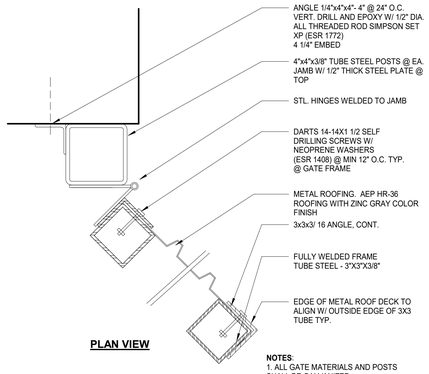

PLAN VIEW

NOTES:
1. ALL GATE MATERIALS AND POSTS SHALL BE GALVANIZED.
2. ANY EXPOSED ANCHOR HARDWARS TO BE STAINLESS STEEL OR HAVE AN EXPOXY PAINT COATING

STEEL GATE | 1 1/2" = 1'-0" | **7**

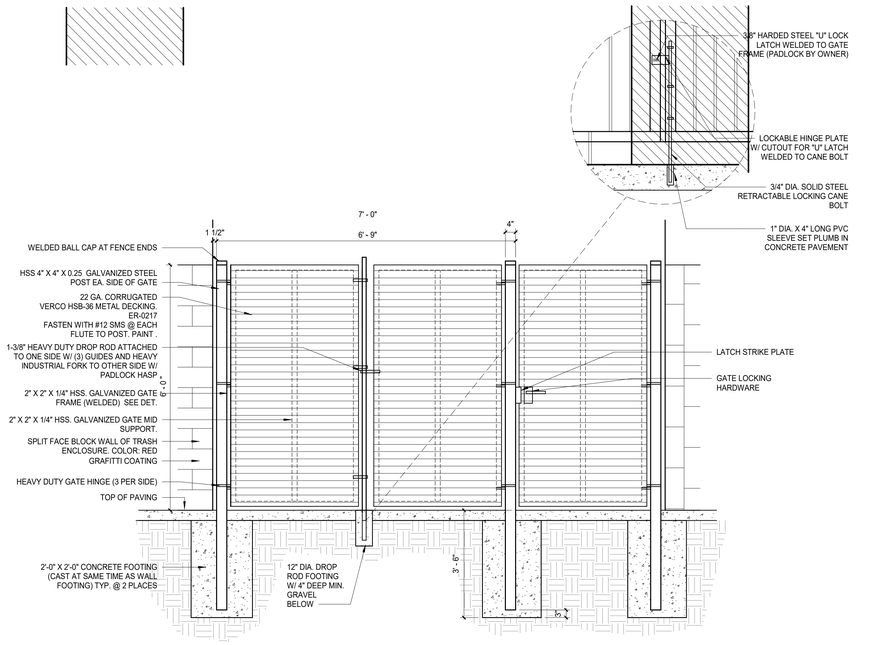

TRASH ENCLOSURE GATE | 1/2" = 1'-0" | **1**

CITY OF GARDENA — INCORPORATED 1930

PREPARED BY:
SVA ARCHITECTS
6 HUTTON CENTRE DR, SUITE 1150
SANTA ANA, CA 92707
T 949.809.3380 WWW.SVA-ARCHITECTS.COM

THIS DOCUMENT CONTAINS INFORMATION PROPRIETARY TO SVA ARCHITECTS INC. AND IS FURNISHED IN CONFIDENCE FOR THE LIMITED PURPOSE OF EVALUATION, BIDDING OR REVIEW. THIS DOCUMENT OR ITS CONTENTS MAY NOT BE USED FOR ANY OTHER PURPOSE AND MAY NOT BE REPRODUCED OR DISCLOSED TO OTHERS WITHOUT THE PRIOR WRITTEN CONSENT OF SVA ARCHITECTS INC. ALL RIGHTS RESERVED. © COPYRIGHT 2016.

LICENSED ARCHITECT — ROBERT M. SIMPSON — No. C-18801 — JAN. 31, 2025 — STATE OF CALIFORNIA

REVISIONS

NO.	DESCRIPTION	DATE	APPROVED
1	90% CD SUBMITTAL	12/15/2022	
2	100% CD SUBMITTAL	05/01/2023	
3	FINAL SUBMITTAL	06/30/2023	

B.M.: THE CITY OF GARDENA BENCHMARK NO. SD-15 ELEV. = 43.508'

	INITIAL	DATE
DESIGNED BY	AP/EC	05/25/2022
DRAWN BY	NC	06/20/23
CHECKED BY	DB	06/29/23

CITY OF GARDENA
DEPARTMENT OF PUBLIC WORKS - ENGINEERING

POOL BUILDING DETAILS

COMMUNITY AQUATICS & SENIOR CENTER

A40.2

APPROVED BY:

APPROVED BY: DIRECTOR OF PUBLIC WORKS

SHT. 60 OF 195 DWG. NO. 5-2606

CARDENA COMMUNITY AQUATICS AND SENIOR CENTER - CITY SUBMITTAL SET

PLOT DATE: 12/15/2022 9:00:00 AM
PLOT BY: Nicholas Cruz
PLOT NAME: G:\Projects\2021\Documents (Gardena, Community Pool and Senior Center - dbw-withfire.pen-Mechs.ctb

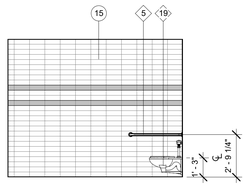

2A

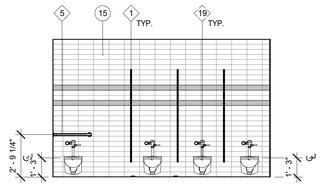

2B

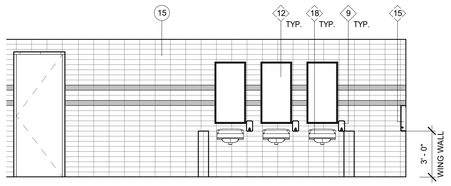

2C

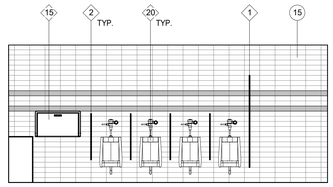

2D

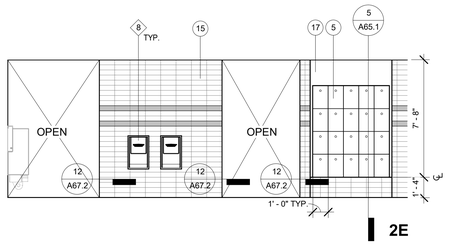

2E

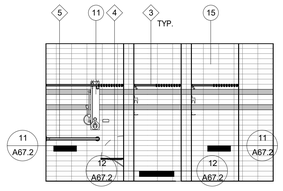

2F

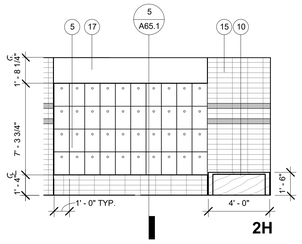

2H

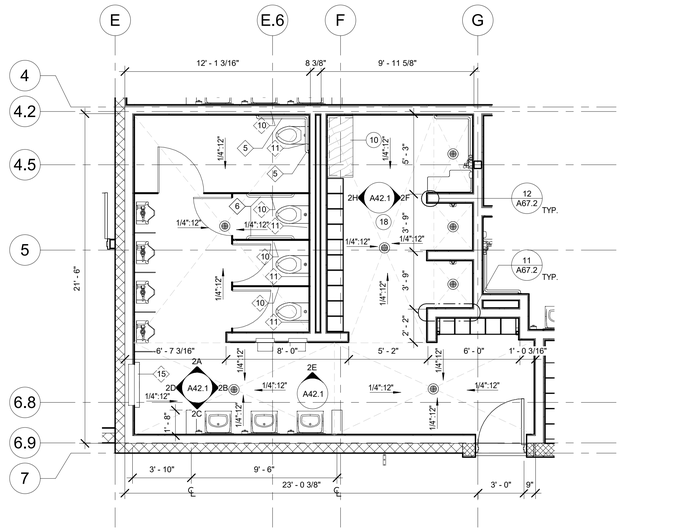

MENS LOCKER ROOM | 1/4" = 1'-0" | **2**

1 FLOOR-MOUNTED, OVERHEAD BRACED PHENOLIC-CORE PARTITIONS-SEE SPECS
2 WALL-HUNG PHENOLIC URINAL SCREEN, 42" HIGH X 18" DEEP
3 HEAVY-DUTY CURTAIN ROD (BOBRICK B-207X36) & CURTAIN (BOBRICK B-204-2)
4 FOLDING SHOWER SEAT (BOBRICK 5181)
5 GRAB BARS FOR ACCESSIBLE TOILET (1-1/4" DIA. STAINLESS STEEL):
42" LENGTH @ SIDE WALL (BOBRICK B-5806X42)
36" LENGTH @ REAR WALL (BOBRICK B-5806X36)
6 1-1/4" DIA. STAINLESS STEEL GRAB BAR, 42", BOBRICK B-5806X42
7 PAPER TOWEL DISPENSER (BOBRICK B-2860)
8 RECESSED ELECTRIC HAND DRYER (DYSON AIRBLADE)
9 SURFACE MOUNTED LIQUID SOAP DISPENSER (BOBRICK B-2111)
10 TOILET PAPER DISPENSER (BOBRICK B-2892)
11 TOILET SEAT COVER DISPENSER (BOBRICK B-221)
12 24" x 36" FRAMED MIRROR, BOBRICK B-165 2436
13 MOP & BROOM HOLDER (BOBRICK B-224)
14 CLOTHES HOOK (BOBRICK B-2116)
15 BABY CHANGING STATION (KOALA KB-110)
16 MOP SINK, SEE PLUMBING DRAWINGS
17 WALL-MOUNTED INDIVIDUAL SHOWER HEAD, FLUSH
18 WALL-MOUNTED LAVATORY - REFER TO PLUMB. DWG'S. FOR ADD'L. INFO.
19 WALL-MOUNTED WATER CLOSET - REFER TO PLUMB. DWG'S. FOR ADD'L. INFO
20 WALL-MOUNTED URINAL - REFER TO PLUMB. DWG'S. FOR ADD'L. INFO.
21 WALL-MOUNTED SANITARY DISPOSAL - BOBRICK B270
22 WALL-MOUNTED SANITARY VENDING - BOBRICK B2706C

* REFER SHEET GEN-5 FOR MOUNTING HEIGHTS AND LOCATIONS FOR ALL ACCESSIBLE RESTROOM ACCESSORIES AND FIXTURES.

RESTROOM ACCESSORY LEGEND

1 SOLID SURFACE COUNTERTOP, SEE FINSH PLAN AND SPECS.
2 BASE PLASTIC LAMINATE MILLWORK, SEE DETAILS AND SPECS.
3 UPPER PLASTIC LAMINATE MILLWORK, SEE DETAILS AND SPECS.
4 FILLER PANEL @ SIDES OF CASEWORK, TYP.
5 PHENOLIC LOCKERS, SEE SPECS AND DETAIL 8 / A65.1
6 10'-0" TALL STC 50 OPERABLE PARTITION
7 12" WIDE 36" TALL CMU WALL, PER DETAIL
8 4" HSS TUBE STEEL POSTS, PAINTED
9 STEEL GUARDRAIL, PAINTED
10 ADA LOCKER ROOM BENCH 11 / A65.1
11 ADA SHOWER, FOR MOUNTING HEIGHTS SEE 1 / A67.2
12 DRINKING FOUNTAIN, FOR MOUNTING SEE 2 / GEN-5 & 8 / A67.1
13 ACCESSIBLE SINK
14 REFRIGERATOR, SEE SPECS, CFCI
15 4"x12" TILE WALL FINISH FLOOR TO CEILING WITH COVED BASE, FOR COLOR AND PATTERN SEE 9 / A67.2
16 2"x2" TILE WALL FINISH, DALTILE COLOR OCEAN BLUE 1049
17 PHENOLIC LOCKER FILLER PANELS, SEE DETAILS AND SPECS.
18 DRESSING AREA

ENLARGED PLAN & ELEVATION KEYNOTES

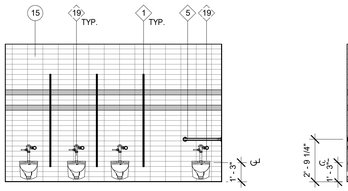

1A



1B

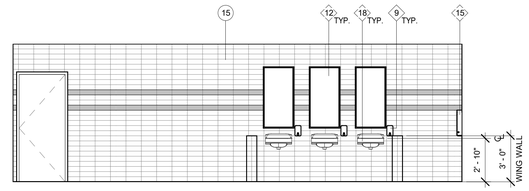

1C

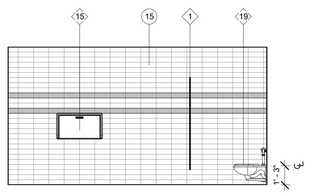

1D

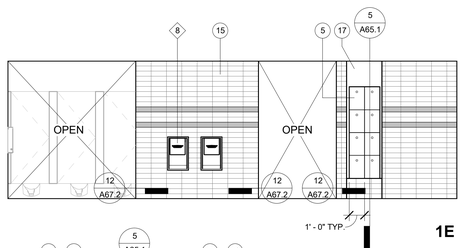

1E

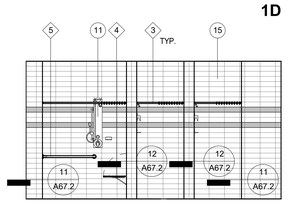

1F

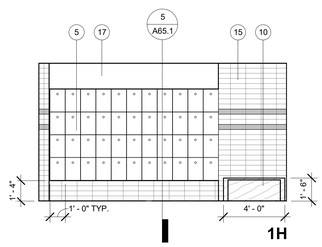

1H

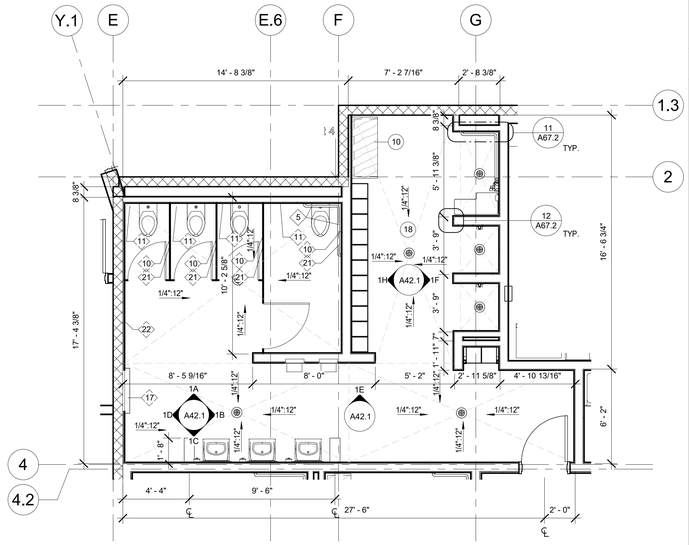

WOMENS LOCKER ROOM | 1/4" = 1'-0" | **1**

FLOOR PLAN LEGEND

30"X48" CLR. — 30"X48" MIN. ACCESSIBLE WHEELCHAIR CLEAR FLOOR SPACE
60" MIN CLR. — 60" MIN. ACCESSIBLE WHEELCHAIR CLEAR TURNING SPACE
8" CMU WALL PER SHEET A61.1
10" CMU WALL PER SHEET A61.1
12" CMU WALL PER SHEET A61.1
METAL STUD WALL PER SHEET A61.1
RETAINING WALL - SEE STRUCT. DWGS. FOR ADD'L. INFO.
1 — WALL TYPE ANNOTATIONS, SEE SHEET A61.1 FOR DETAILS
101 — NUMBER INDICATES DOOR PER SCHEDULE, REFER TO SHEET A52.1
1 — NUMBER INDICATED STOREFRONT PER SCHEDULE, REFER TO SHEET A52.2
F.E. — FIRE EXTINGUISHER CABINET PER DET. 3/A65.1

FLOOR PLAN GENERAL NOTES:
1. ALL DIMENSIONS ARE TO CENTERLINE OF THE GRID LINES AND/OR TO THE FACE OF STUDS, U.N.O.
2. UNLESS NOTED OTHERWISE, ALL WALLS ARE FULL HEIGHT.
3. REFER TO SHEET GEN-4 FOR TYPICAL ACCESSIBILITY REQUIREMENTS AND DIMENSIONS.
4. REFER TO ENLARGED PLANS FOR DIMENSIONS AND CALLOUTS NOT SHOWN HERE.

CITY OF GARDENA — FREEWAY CITY — INCORPORATED 1930

PREPARED BY:
SVA ARCHITECTS
6 HUTTON CENTRE DR, SUITE 1150
SANTA ANA, CA 92707
T 949.809.3380 WWW.SVA-ARCHITECTS.COM

THIS DOCUMENT CONTAINS INFORMATION PROPRIETARY TO SVA ARCHITECTS INC. AND IS FURNISHED IN CONFIDENCE FOR THE LIMITED PURPOSE OF EVALUATION, BIDDING OR REVIEW. THIS DOCUMENT OR ITS CONTENTS MAY NOT BE USED FOR ANY OTHER PURPOSE AND MAY NOT BE REPRODUCED OR DISCLOSED TO OTHERS WITHOUT THE PRIOR WRITTEN CONSENT OF SVA ARCHITECTS INC. ALL RIGHTS RESERVED, © COPYRIGHT 2018.

LICENSED ARCHITECT — ROBERT M. SIMONIAN — No. C-18001 — JAN. 31, 2025 — STATE OF CALIFORNIA

B.M.: THE CITY OF GARDENA BENCHMARK NO. SD-15
ELEV. = 43.508'

REVISIONS

NO.	DESCRIPTION	DATE	APPROVED
1	90% CD SUBMITTAL	12/15/2022	
2	100% CD SUBMITTAL	05/01/2023	
3	FINAL SUBMITTAL	06/30/2023	

CITY OF GARDENA
DEPARTMENT OF PUBLIC WORKS - ENGINEERING
ENLARGED LOCKER ROOM PLANS AND ELEVATIONS
COMMUNITY AQUATICS & SENIOR CENTER
A42.1

	INITIAL	DATE
DESIGNED BY	AP/EC	05/25/2022
DRAWN BY	NC	06/20/23
CHECKED BY	DB	06/29/23

APPROVED BY:
APPROVED BY: DIRECTOR OF PUBLIC WORKS
SHT. 61 OF 195 DWG. NO. S-2606

CARDENA COMMUNITY AQUATICS AND SENIOR CENTER – CITY SUBMITTAL SET

PLOT DATE: 01 Sep 2023 at 11:19am
PLOT BY: Nicholas Gardena
FILE PATH: C:\Users\Nicholas Gardena\Documents\Community Pool and Senior Center_dbrownlow-sva-architects.com.rvt

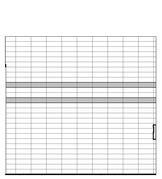

6A

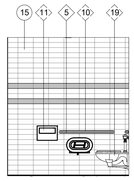

6B

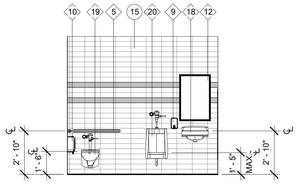

6C

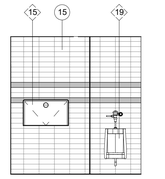

3A

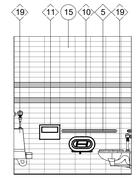

3B

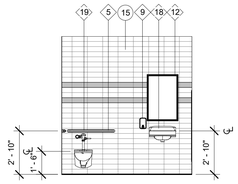

3C

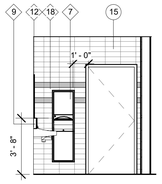

3D

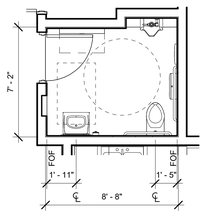

SINGLE OCCUPANCY RESTROOM - RM 107 | 1/4" = 1'-0" | 3

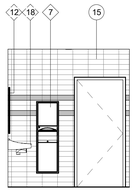

6D

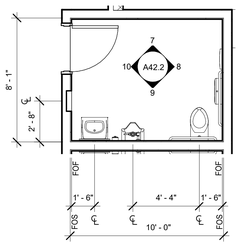

SINGLE OCCUPANCY RESTROOM - RM 111 (112 SIM) | 1/4" = 1'-0" | 6

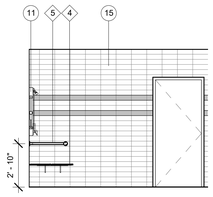

2A

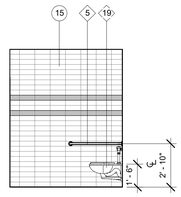

2B

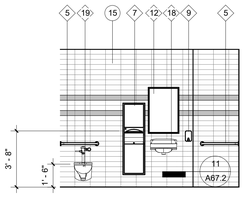

2C

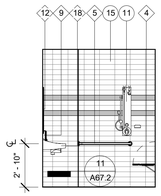

2D

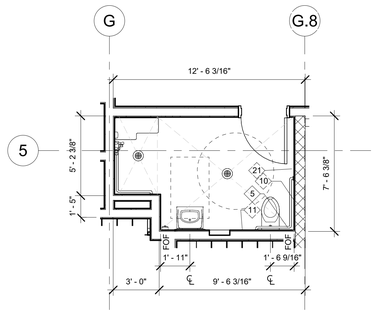

FAMILY RESTROOM | 1/4" = 1'-0" | 2

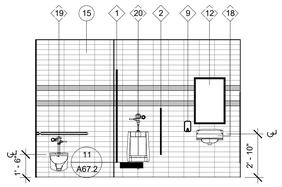

1A

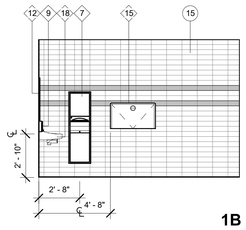

1B

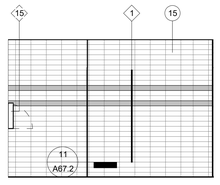

1C

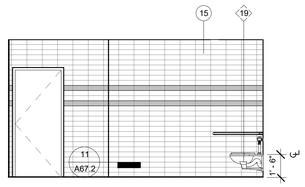

1D

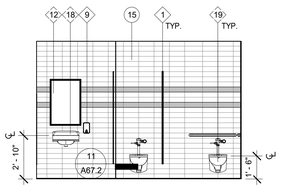

1E

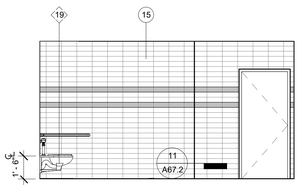

1F

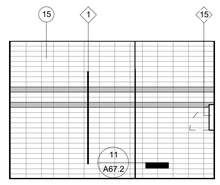

1G

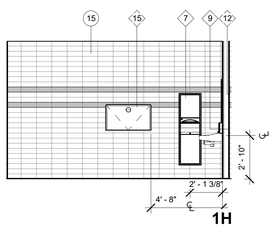

1H

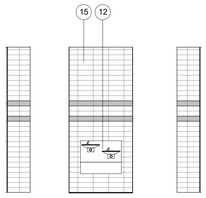

1P

1N

1O



1J

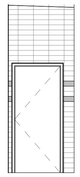

1K

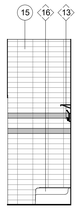

1L

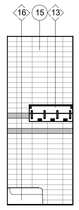

1M

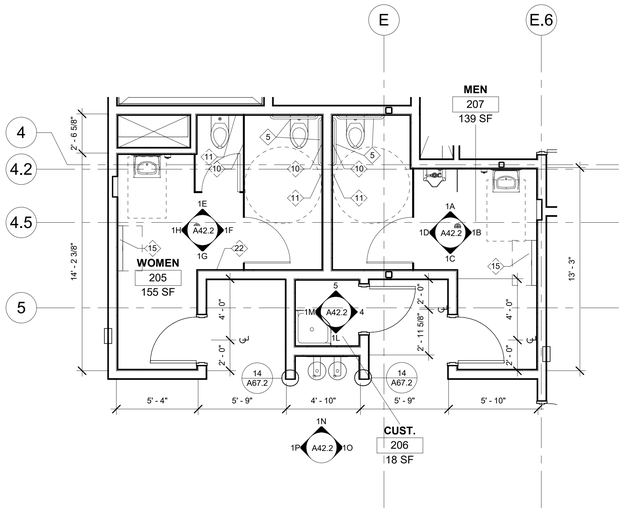

SECOND FLOOR RESTROOMS AND CUST. CLOSET | 1/4" = 1'-0" | 1

1 FLOOR-MOUNTED, OVERHEAD BRACED PHENOLIC-CORE PARTITIONS-SEE SPECS
2 WALL-HUNG PHENOLIC URINAL SCREEN, 42" HIGH X 18" DEEP
3 HEAVY-DUTY CURTAIN ROD (BOBRICK B-207X36) & CURTAIN (BOBRICK B-204-2)
4 FOLDING SHOWER SEAT (BOBRICK 5181)
5 GRAB BARS FOR ACCESSIBLE TOILET (1-1/4" DIA. STAINLESS STEEL):
42" LENGTH @ SIDE WALL (BOBRICK B-5806X42)
36" LENGTH @ REAR WALL (BOBRICK B-5806X36)
6 1-1/4" DIA. STAINLESS STEEL GRAB BAR, 42", BOBRICK B-5806X42
7 PAPER TOWEL DISPENSER (BOBRICK B-2860)
8 RECESSED ELECTRIC HAND DRYER (DYSON AIRBLADE)
9 SURFACE MOUNTED LIQUID SOAP DISPENSER (BOBRICK B-2111)
10 TOILET PAPER DISPENSER (BOBRICK B-2892)
11 TOILET SEAT COVER DISPENSER (BOBRICK B-221)
12 24" x 36" FRAMED MIRROR, BOBRICK B-165 2436
13 MOP & BROOM HOLDER (BOBRICK B-224)
14 CLOTHES HOOK (BOBRICK B-2116)
15 BABY CHANGING STATION (KOALA KB-110)
16 MOP SINK, SEE PLUMBING DRAWINGS
17 WALL-MOUNTED INDIVIDUAL SHOWER HEAD, FLUSH
18 WALL-MOUNTED LAVATORY - REFER TO PLUMB. DWG'S. FOR ADD'L. INFO.
19 WALL-MOUNTED WATER CLOSET - REFER TO PLUMB. DWG'S. FOR ADD'L. INFO
20 WALL-MOUNTED URINAL - REFER TO PLUMB. DWG'S. FOR ADD'L. INFO.
21 WALL-MOUNTED SANITARY DISPOSAL - BOBRICK B270
22 WALL-MOUNTED SANITARY VENDING - BOBRICK B2706C

* REFER SHEET GEN-5 FOR MOUNTING HEIGHTS AND LOCATIONS FOR ALL ACCESSIBLE RESTROOM ACCESSORIES AND FIXTURES.

RESTROOM ACCESSORY LEGEND

1 SOLID SURFACE COUNTERTOP, SEE FINSH PLAN AND SPECS.
2 BASE PLASTIC LAMINATE MILLWORK, SEE DETAILS AND SPECS.
3 UPPER PLASTIC LAMINATE MILLWORK, SEE DETAILS AND SPECS.
4 FILLER PANEL @ SIDES OF CASEWORK, TYP.
5 PHENOLIC LOCKERS, SEE SPECS AND DETAIL 8 / A65.1
6 10'-0" TALL STC 50 OPERABLE PARTITION
7 12" WIDE 36" TALL CMU WALL, PER DETAIL
8 4" HSS TUBE STEEL POSTS, PAINTED
9 STEEL GUARDRAIL, PAINTED
10 ADA LOCKER ROOM BENCH 11 / A65.1
11 ADA SHOWER, FOR MOUNTING HEIGHTS SEE 1 / A67.2
12 DRINKING FOUNTAIN, FOR MOUNTING SEE 2 / GEN-5 & 8 / A67.1
13 ACCESSIBLE SINK
14 REFRIGERATOR. SEE SPECS, CFCI
15 4"x12" TILE WALL FINISH FLOOR TO CEILING WITH COVED BASE, FOR COLOR AND PATTERN SEE 9 / A67.2
16 2"x2" TILE WALL FINISH, DALTILE COLOR OCEAN BLUE 1049
17 PHENOLIC LOCKER FILLER PANELS, SEE DETAILS AND SPECS.
18 DRESSING AREA

ENLARGED PLAN & ELEVATION KEYNOTES

30"X48" CLR. — 30"X48" MIN. ACCESSIBLE WHEELCHAIR CLEAR FLOOR SPACE
60" MIN. CLR. — 60" MIN. ACCESSIBLE W/WHEELCHAIR CLEAR TURNING SPACE
8" CMU WALL PER SHEET A61.1
10" CMU WALL PER SHEET A61.1
12" CMU WALL PER SHEET A61.1
METAL STUD WALL PER SHEET A61.1
RETAINING WALL - SEE STRUCT. DWGS. FOR ADD'L. INFO.
WALL TYPE ANNOTATIONS, SEE SHEET A61.1 FOR DETAILS
101 — NUMBER INDICATES DOOR PER SCHEDULE, REFER TO SHEET A52.1
1 — NUMBER INDICATED STOREFRONT PER SCHEDULE, REFER TO SHEET A52.2
F.E. — FIRE EXTINGUISHER CABINET PER DET. 3/A65.1

FLOOR PLAN GENERAL NOTES:
1. ALL DIMENSIONS ARE TO CENTERLINE OF THE GRID LINES AND/OR TO THE FACE OF STUDS, U.N.O.
2. UNLESS NOTED OTHERWISE, ALL WALLS ARE FULL HEIGHT.
3. REFER TO SHEET GEN-4 FOR TYPICAL ACCESSIBILTY REQUIREMENTS AND DIMENSIONS.
4. REFER TO ENLARGED PLANS FOR DIMENSIONS AND CALLOUTS NOT SHOWN HERE.

FLOOR PLAN LEGEND

CARDENA COMMUNITY AQUATICS AND SENIOR CENTER - CITY SUBMITTAL SET

PREPARED BY:
6 HUTTON CENTRE DR, SUITE 1150
SANTA ANA, CA 92707
T 949.809.3380 WWW.SVA-ARCHITECTS.COM

THIS DOCUMENT CONTAINS INFORMATION PROPRIETARY TO SVA ARCHITECTS INC. AND IS FURNISHED IN CONFIDENCE FOR THE LIMITED PURPOSE OF EVALUATION, BIDDING OR REVIEW. THIS DOCUMENT OR ITS CONTENTS MAY NOT BE USED FOR ANY OTHER PURPOSE AND MAY NOT BE REPRODUCED OR DISCLOSED TO OTHERS WITHOUT THE PRIOR WRITTEN CONSENT OF SVA ARCHITECTS INC. ALL RIGHTS RESERVED. © COPYRIGHT 2018.

ROBERT M. SIMMONS — No. C-13501 — JAN 31, 2025 — STATE OF CALIFORNIA

B.M.: THE CITY OF GARDENA BENCHMARK NO. SD-15
ELEV. = 43.526'

REVISIONS

NO.	DESCRIPTION	DATE	APPROVED
1	90% CD SUBMITTAL	12/15/2022	
2	100% CD SUBMITTAL	05/01/2023	
3	FINAL SUBMITTAL	06/30/2023	

	INITIAL	DATE
DESIGNED BY	AP/EC	05/25/2022
DRAWN BY	NC	06/20/23
CHECKED BY	DB	06/29/23

CITY OF GARDENA
DEPARTMENT OF PUBLIC WORKS - ENGINEERING
ENLARGED PLANS AND ELEVATIONS
COMMUNITY AQUATICS & SENIOR CENTER
A42.2

APPROVED BY:
APPROVED BY: DIRECTOR OF PUBLIC WORKS
SHT. 62 OF 195 DWG. NO. 5-2606

PLOT DATE: 6/30/2023 9:44:11 AM
PLOT BY: Nicholas Cruz
PLOT NAME: G:\Projects\Gardena\Drawings\Community Pool and Senior Center - Revised\sva-pool-sen-bldg-A.ctb

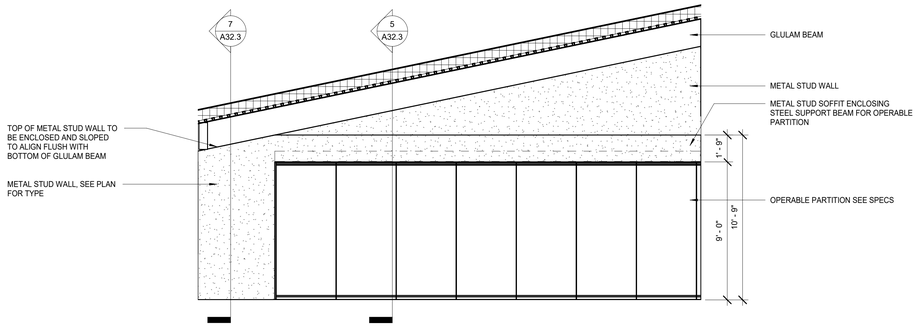

OPERABLE PARTITION ELEVATION | 1/4" = 1'-0" | **7**

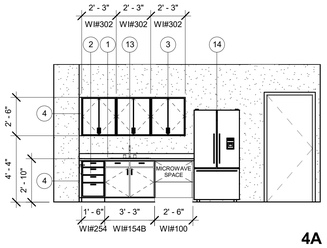

BREAK ROOM | 1/4" = 1'-0" | 6

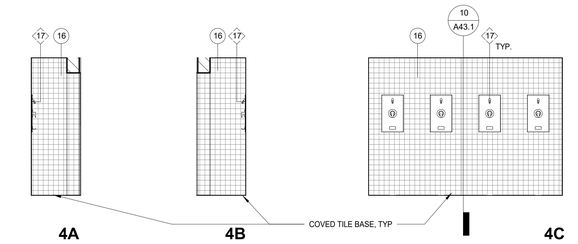

OUTDOOR SHOWER 2 | 1/4" = 1'-0" | 4

1 FLOOR-MOUNTED, OVERHEAD BRACED PHENOLIC-CORE PARTITIONS-SEE SPECS
2 WALL-HUNG PHENOLIC URINAL SCREEN, 42" HIGH X 18" DEEP
3 HEAVY-DUTY CURTAIN ROD (BOBRICK B-207X36) & CURTAIN (BOBRICK B-204-2)
4 FOLDING SHOWER SEAT (BOBRICK 5181)
5 GRAB BARS FOR ACCESSIBLE TOILET (1-1/4" DIA. STAINLESS STEEL):
42" LENGTH @ SIDE WALL (BOBRICK B-5806X42)
36" LENGTH @ REAR WALL (BOBRICK B-5806X36)
6 1-1/4" DIA. STAINLESS STEEL GRAB BAR, 42", BOBRICK B-5806X42
7 PAPER TOWEL DISPENSER (BOBRICK B-2860)
8 RECESSED ELECTRIC HAND DRYER (DYSON AIRBLADE)
9 SURFACE MOUNTED LIQUID SOAP DISPENSER (BOBRICK B-2111)
10 TOILET PAPER DISPENSER (BOBRICK B-2892)
11 TOILET SEAT COVER DISPENSER (BOBRICK B-221)
12 24" x 36" FRAMED MIRROR, BOBRICK B-165 2436
13 MOP & BROOM HOLDER (BOBRICK B-224)
14 CLOTHES HOOK (BOBRICK B-2116)
15 BABY CHANGING STATION (KOALA KB-110)
16 MOP SINK, SEE PLUMBING DRAWINGS
17 WALL-MOUNTED INDIVIDUAL SHOWER HEAD, FLUSH
18 WALL-MOUNTED LAVATORY - REFER TO PLUMB. DWG'S. FOR ADD'L. INFO.
19 WALL-MOUNTED WATER CLOSET - REFER TO PLUMB. DWG'S. FOR ADD'L. INFO
20 WALL-MOUNTED URINAL - REFER TO PLUMB. DWG'S. FOR ADD'L. INFO.

* REFER SHEET GEN-5 FOR MOUNTING HEIGHTS AND LOCATIONS FOR ALL ACCESSIBLE RESTROOM ACCESSORIES AND FIXTURES.

RESTROOM ACCESSORY LEGEND

1 SOLID SURFACE COUNTERTOP, SEE FINISH PLAN AND SPECS.
2 BASE PLASTIC LAMINATE MILLWORK, SEE DETAILS AND SPECS.
3 UPPER PLASTIC LAMINATE MILLWORK, SEE DETAILS AND SPECS.
4 FILLER PANEL @ SIDES OF CASEWORK, TYP.
5 PHENOLIC LOCKERS, SEE SPECS AND DETAIL 8 / A65.1
6 10'-0" TALL STC 50 OPERABLE PARTITION
7 12" WIDE 36" TALL CMU WALL, PER DETAIL
8 4" HSS TUBE STEEL POSTS, PAINTED
9 STEEL GUARDRAIL, PAINTED
10 ADA LOCKER ROOM BENCH 11 / A65.1
11 ADA SHOWER, FOR MOUNTING HEIGHTS SEE 1 / A67.2
12 DRINKING FOUNTAIN, FOR MOUNTING SEE 2 / GEN-5 & 8 / A67.1
13 ACCESSIBLE SINK
14 REFRIGERATOR, SEE SPECS, CFCI
15 4"x12" TILE WALL FINISH FLOOR TO CEILING WITH COVED BASE, FOR COLOR AND PATTERN SEE 9 / A67.2
16 2"x2" TILE WALL FINISH, DALTILE COLOR OCEAN BLUE 1049
17 PHENOLIC LOCKER FILLER PANELS, SEE DETAILS AND SPECS.
18 DRESSING AREA

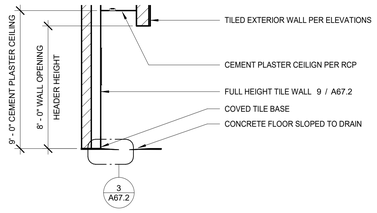

EXTERIOR SHOWER SECTION | 1/4" = 1'-0" | **10**

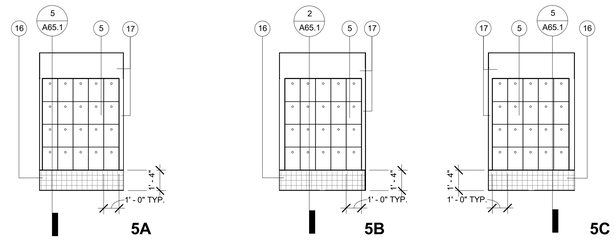

LOCKER ROOM | 1/4" = 1'-0" | 5

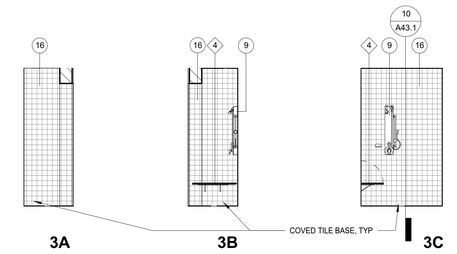

OUTDOOR SHOWER 1 | 1/4" = 1'-0" | 3

ENLARGED PLAN & ELEVATION KEYNOTES

1 30" WIDE SS SINGLE BASIN SINK WITH INTEGRAL 18" DRAINBOARDS
2 36" WIDE REFRIGERATOR, CFCI
3 RESIDENTIAL GRADE DISHWASHER, CFCI
4 ICEMAKER, CFCI
5 MICROWAVE, CFCI
6 DUAL COFFEEMAKER WITH HOT WATER TAP, CFCI
7 36" RANGE, CFCI
8 42" RANGE HOOD, CFCI
9 SS MOBILE WIRE SHELVING, CFCI
10 ALUMINUM ROLL UP COUNTER SERVICE DOOR WITH SS JAMBS AND SILL
11 24" WIDE STAND UP FREEZER, CFCI
12 BACKSPLASH MOUNTED SS PREWASH FAUCET

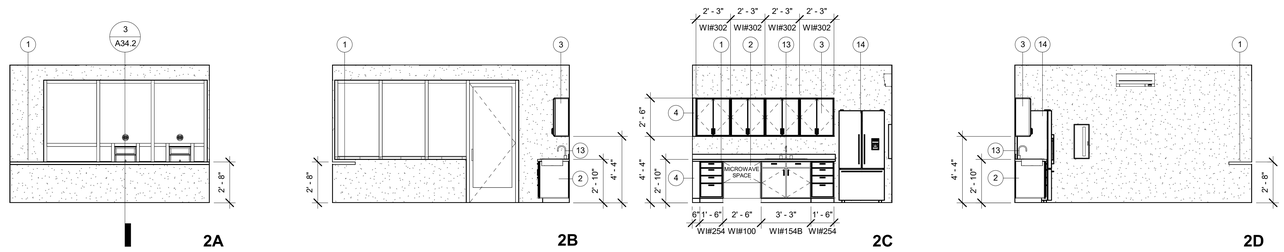

LIFEGUARD ROOM | 1/4" = 1'-0" | 2

KITCHEN ACCESSORIES LEGEND

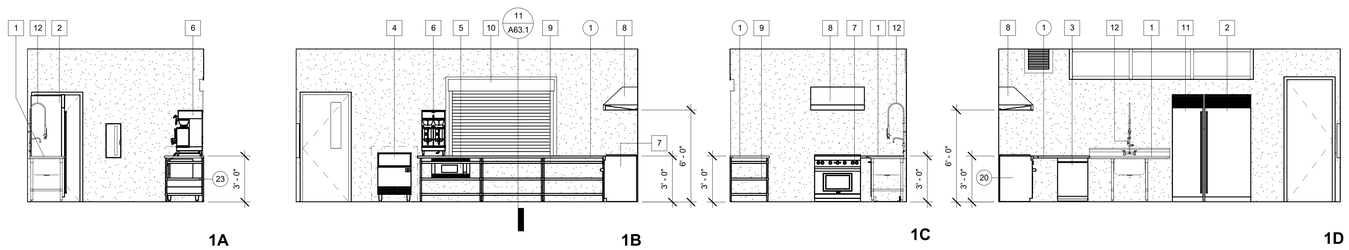

KITCHEN | 1/4" = 1'-0" | 1

CITY OF GARDENA FREEWAY CITY INCORPORATED 1930

PREPARED BY:
SVA ARCHITECTS
6 HUTTON CENTRE DR, SUITE 1150
SANTA ANA, CA 92707
T 949.809.3380 WWW.SVA-ARCHITECTS.COM

THIS DOCUMENT CONTAINS INFORMATION PROPRIETARY TO SVA ARCHITECTS INC. AND IS FURNISHED IN CONFIDENCE FOR THE LIMITED PURPOSE OF EVALUATION, BIDDING OR REVIEW. THIS DOCUMENT OR ITS CONTENTS MAY NOT BE USED FOR ANY OTHER PURPOSE AND MAY NOT BE REPRODUCED OR DISCLOSED TO OTHERS WITHOUT THE PRIOR WRITTEN CONSENT OF SVA ARCHITECTS INC. ALL RIGHTS RESERVED, © COPYRIGHT 2018.

LICENSED ARCHITECT ROBERT M. SIMONDS No. C-19001 JAN. 31, 2025 STATE OF CALIFORNIA

B.M.: THE CITY OF GARDENA BENCHMARK NO. SD-15
ELEV. = 43.508'

REVISIONS

NO.	DESCRIPTION	DATE	APPROVED
1	90% CD SUBMITTAL	12/15/2022	
2	100% CD SUBMITTAL	05/01/2023	
3	FINAL SUBMITTAL	06/30/2023	

	INITIAL	DATE
DESIGNED BY	AP/EC	05/25/2022
DRAWN BY	NC	06/20/23
CHECKED BY	DB	06/29/23

APPROVED BY:
APPROVED BY: DIRECTOR OF PUBLIC WORKS

SHT. 63 OF 195 DWG. NO. S-2606

CITY OF GARDENA
DEPARTMENT OF PUBLIC WORKS - ENGINEERING
INTERIOR ELEVATIONS
COMMUNITY AQUATICS & SENIOR CENTER
A43.1

CARDENA COMMUNITY AQUATICS AND SENIOR CENTER - CITY SUBMITTAL SET

PLOT DATE: 12/15/2022 9:37:47 AM
PLOT BY: C:\Users\dbrown\Documents\Gardena_Community Pool and Senior Center_dbrown@sva-architects.com.rvt

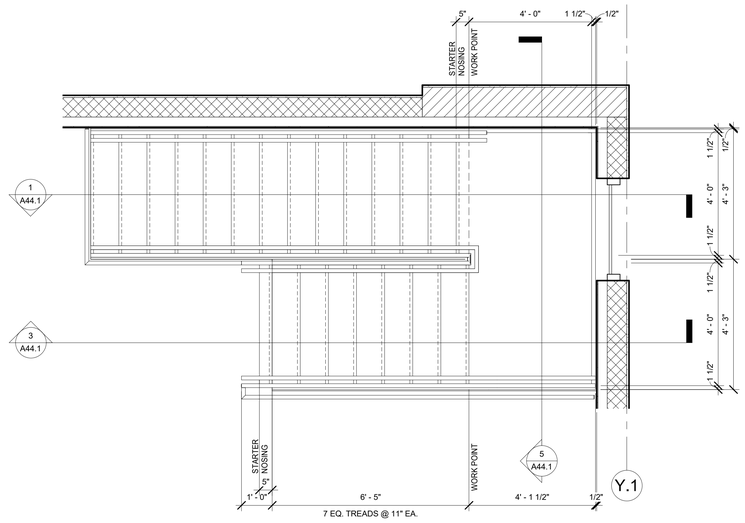

INTERIOR STAIR SECOND FLOOR PLAN | 1/2" = 1'-0" | 4

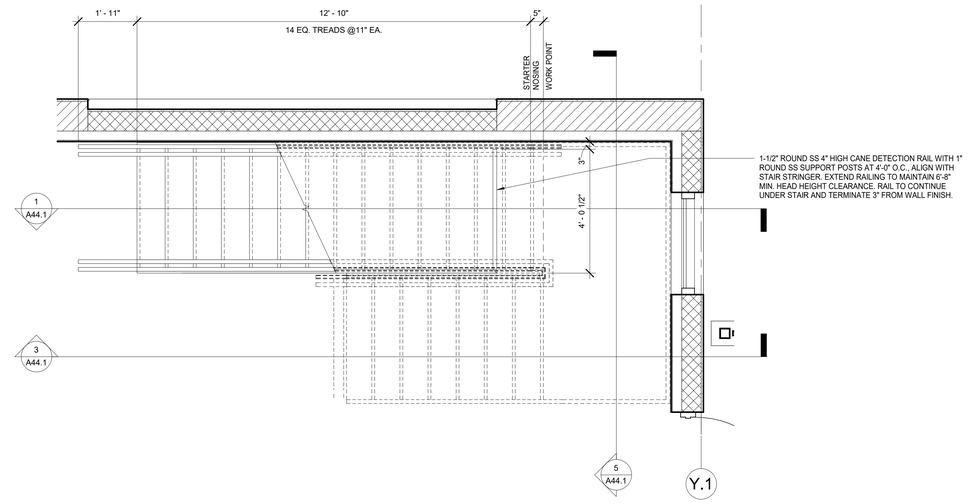

INTERIOR STAIR FIRST FLOOR PLAN | 1/2" = 1'-0" | 2

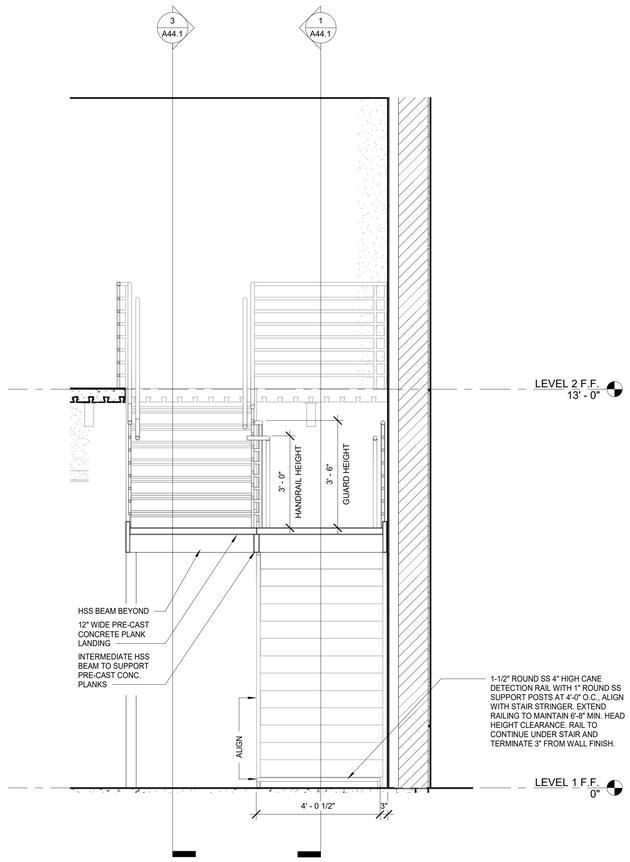

INTERIOR STAIR SECTION 3 | 1/2" = 1'-0" | 5

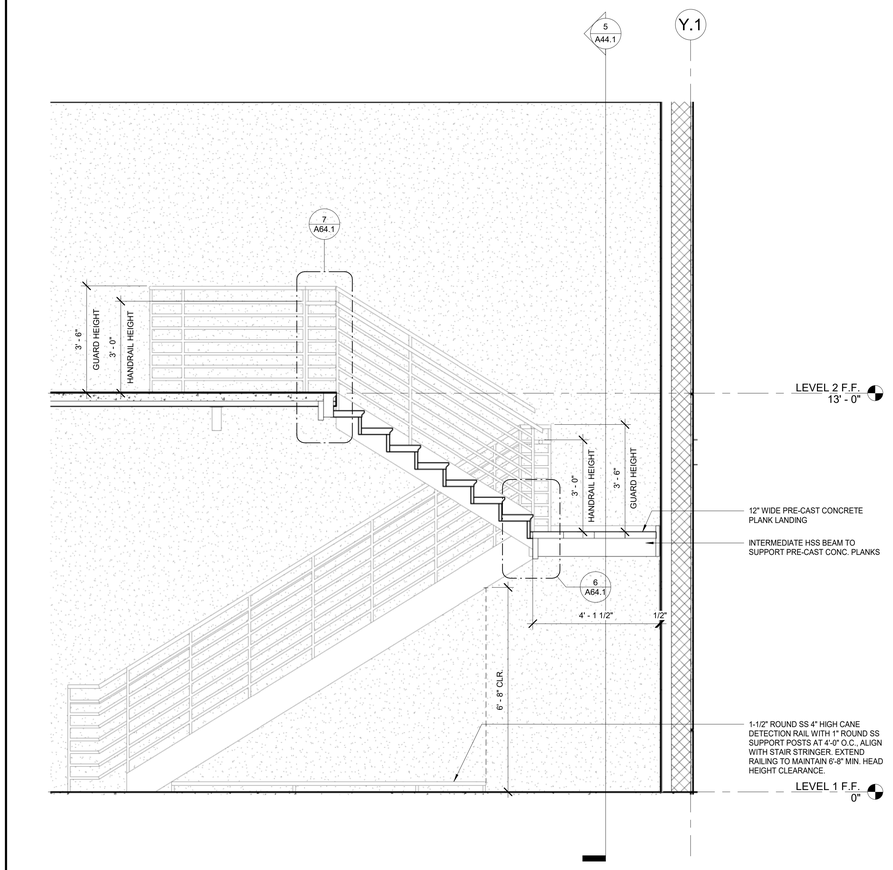

INTERIOR STAIR SECTION 2 | 1/2" = 1'-0" | 3

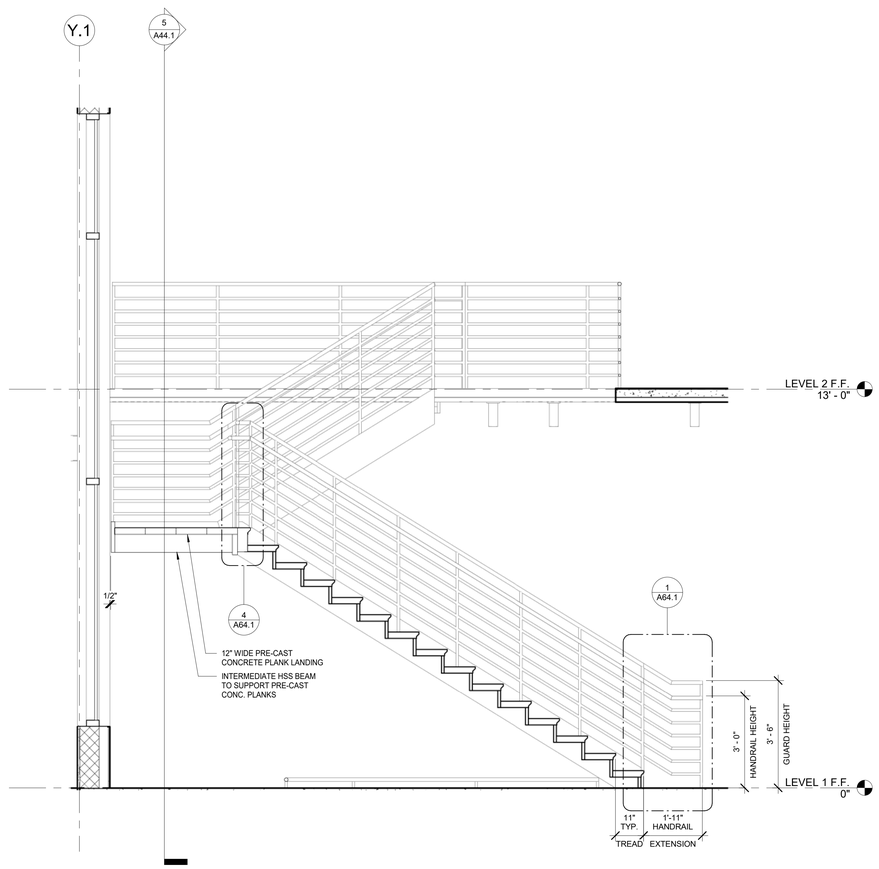

INTERIOR STAIR SECTION 1 | 1/2" = 1'-0" | 1

CITY OF GARDENA
FREWAY CITY
INCORPORATED 1930

PREPARED BY:

SVA ARCHITECTS
6 HUTTON CENTRE DR, SUITE 1150
SANTA ANA, CA 92707
T 949.809.3380 WWW.SVA-ARCHITECTS.COM

THIS DOCUMENT CONTAINS INFORMATION PROPRIETARY TO SVA ARCHITECTS INC. AND IS FURNISHED IN CONFIDENCE FOR THE LIMITED PURPOSE OF EVALUATION, BIDDING OR REVIEW. THIS DOCUMENT OR ITS CONTENTS MAY NOT BE USED FOR ANY OTHER PURPOSES AND MAY NOT BE REPRODUCED OR DISCLOSED TO OTHERS WITHOUT THE PRIOR WRITTEN CONSENT OF SVA ARCHITECTS INC. ALL RIGHTS RESERVED, © COPYRIGHT 2018.

LICENSED ARCHITECT
ROBERT M. SIMPSON
No. C-13001
JAN. 31, 2025
STATE OF CALIFORNIA

B.M.: THE CITY OF GARDENA BENCHMARK NO. SD-15
ELEV. = 43.008'

REVISIONS

NO.	DESCRIPTION	DATE	APPROVED
1	90% CD SUBMITTAL	12/15/2022	
2	100% CD SUBMITTAL	05/01/2023	
3	FINAL SUBMITTAL	06/30/2023	

CITY OF GARDENA
DEPARTMENT OF PUBLIC WORKS - ENGINEERING

INTERIOR STAIR PLANS AND SECTIONS

COMMUNITY AQUATICS & SENIOR CENTER

A44.1

	INITIAL	DATE
DESIGNED BY	AP/EC	05/25/2022
DRAWN BY	NC	06/20/23
CHECKED BY	DB	06/29/23

APPROVED BY:

APPROVED BY: DIRECTOR OF PUBLIC WORKS

SHT. 64 OF 195 DWG. NO. 5-2606

CARDENA COMMUNITY AQUATICS AND SENIOR CENTER - CITY SUBMITTAL SET

PLOT DATE: 12/15/2022 9:30 AM
PLOT NAME: G:\2021\21020\CAD\Documents\Gardena Community Pool and Senior Center_dbrownlow-svarchitects.com.rvt

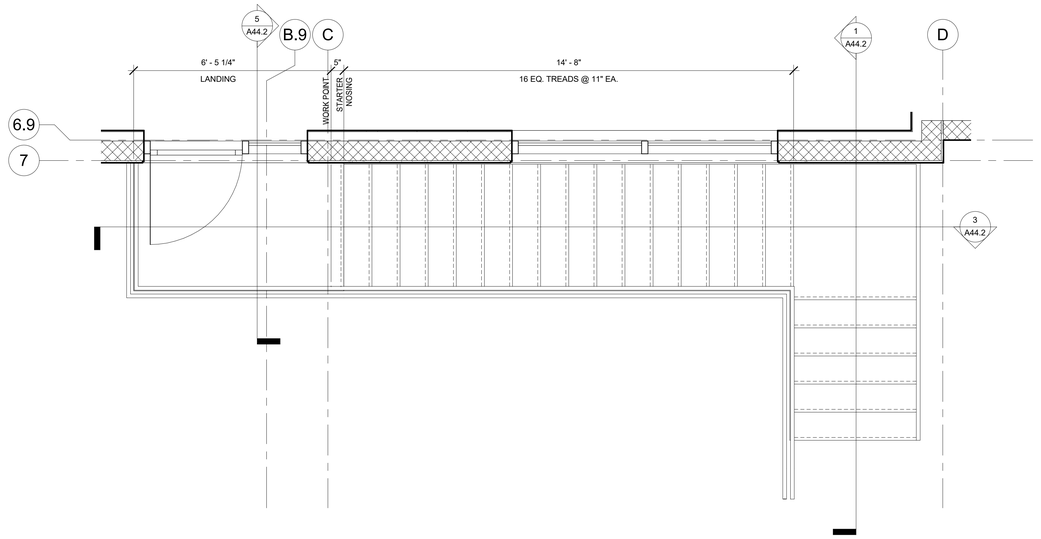

EXTERIOR STAIR SECIOND FLOOR PLAN | 1/2" = 1'-0" | **4**

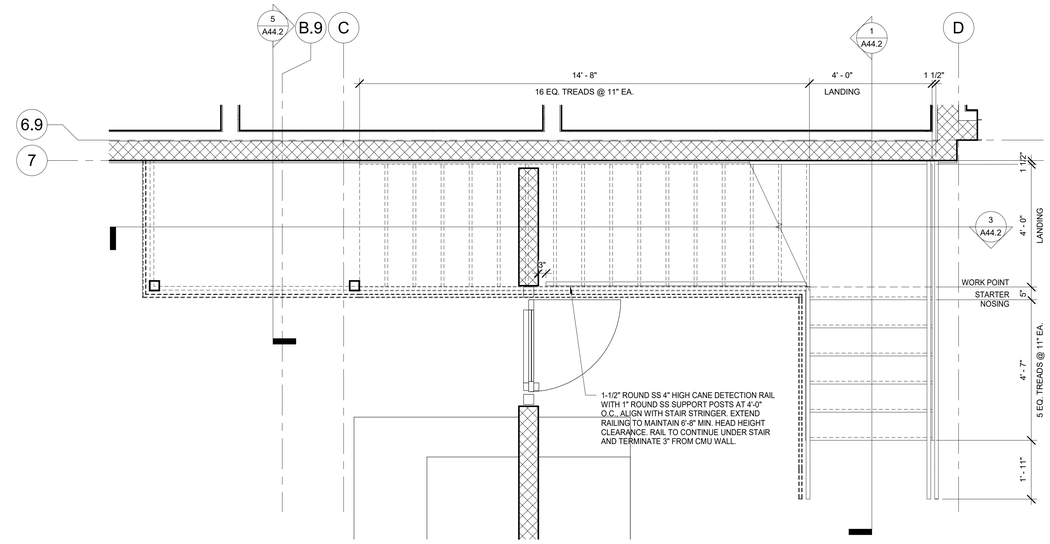

EXTERIOR STAIR FIRST FLOOR PLAN | 1/2" = 1'-0" | **2**

EXTERIOR STAIR SECTION 3 | 1/2" = 1'-0" | **5**

EXTERIOR STAIR SECTION 2 | 1/2" = 1'-0" | **3**

EXTERIOR STAIR SECTION 1 | 1/2" = 1'-0" | **1**

PREPARED BY:
SVA ARCHITECTS
6 HUTTON CENTRE DR, SUITE 1150
SANTA ANA, CA 92707
T 949.809.3380 WWW.SVA-ARCHITECTS.COM

THIS DOCUMENT CONTAINS INFORMATION PROPRIETARY TO SVA ARCHITECTS INC. AND IS FURNISHED IN CONFIDENCE FOR THE LIMITED PURPOSE OF EVALUATION, BIDDING OR REVIEW. THIS DOCUMENT OR ITS CONTENTS MAY NOT BE USED FOR ANY OTHER PURPOSE AND MAY NOT BE REPRODUCED OR DISCLOSED TO OTHERS WITHOUT THE PRIOR WRITTEN CONSENT OF SVA ARCHITECTS INC. ALL RIGHTS RESERVED. © COPYRIGHT 2015.

LICENSED ARCHITECT ROBERT M. SIMMONS No. C-18501 JAN 31, 2025 STATE OF CALIFORNIA

REVISIONS

NO.	DESCRIPTION	DATE	APPROVED
1	90% CD SUBMITTAL	12/15/2022	
2	100% CD SUBMITTAL	05/01/2023	
3	FINAL SUBMITTAL	06/30/2023	

B.M.: THE CITY OF GARDENA BENCHMARK NO. SD-15 ELEV. = 43.508'

	INITIAL	DATE
DESIGNED BY	AP/EC	05/25/2022
DRAWN BY	NC	06/20/23
CHECKED BY	DB	06/29/23

APPROVED BY:

APPROVED BY: DIRECTOR OF PUBLIC WORKS

SHT. 65 OF 195 DWG. NO. 5-2606

CITY OF GARDENA
DEPARTMENT OF PUBLIC WORKS - ENGINEERING

EXTERIOR STAIR PLANS AND SECTIONS

COMMUNITY AQUATICS & SENIOR CENTER

A44.2

CARDENA COMMUNITY AQUATICS AND SENIOR CENTER – CITY SUBMITTAL SET

PLOT DATE: 6/30/2023 PLOT TIME: 2:54:44 PM PLOTTED BY: Nicole Chan
PLOT NAME: G:\2021\21001 Drawings\Arch (Gardena) Community Pool and Senior Center_drawsetdrop\arc06a.ctb

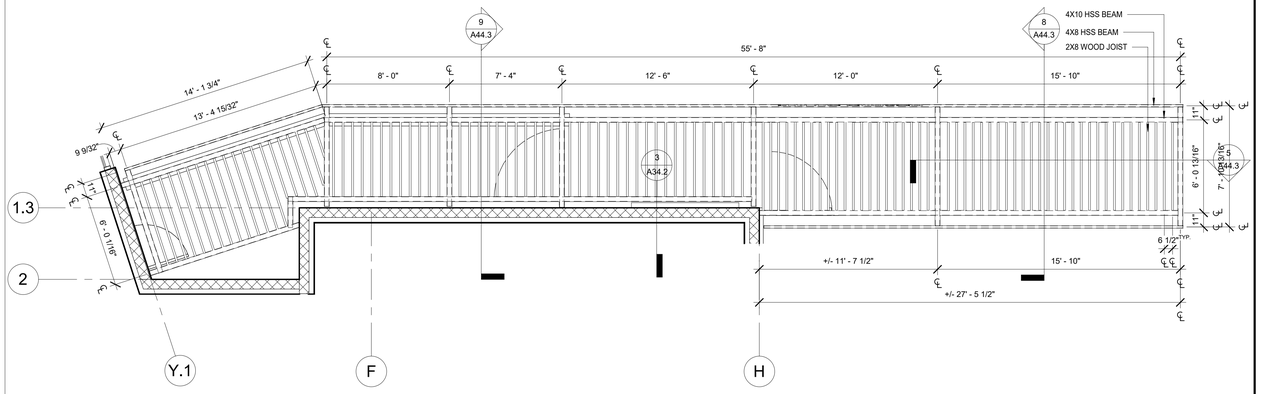

ENLARGED NORTH TRELLIS SECOND FLOOR PLAN | 1/4" = 1'-0" | 6

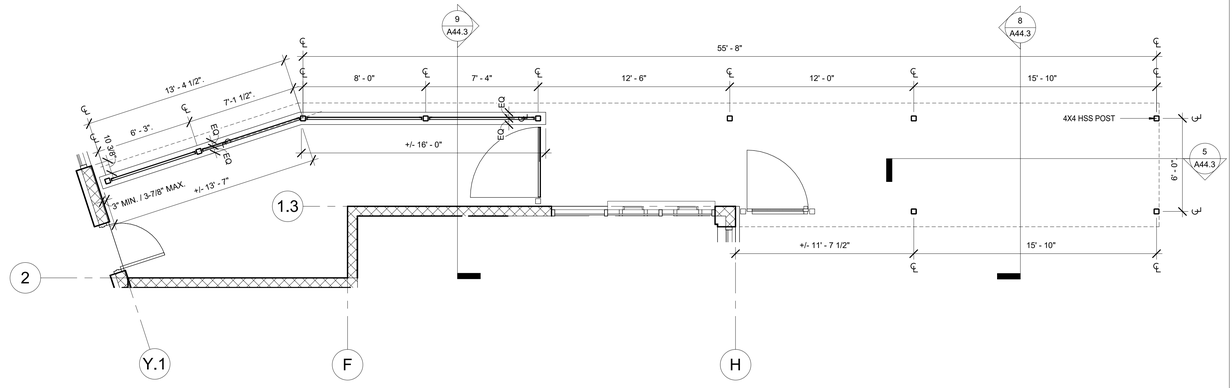

ENLARGED NORTH TRELLIS FIRST FLOOR PLAN | 1/4" = 1'-0" | 3

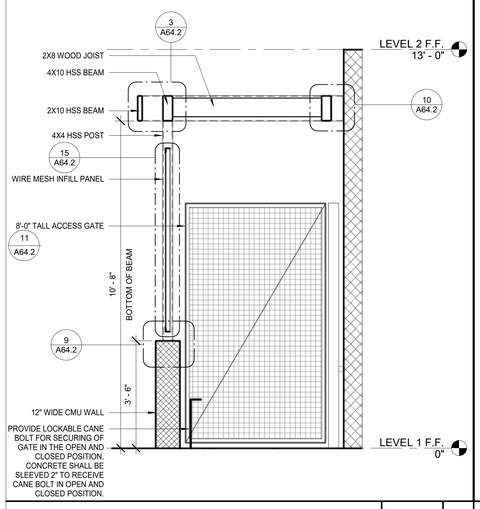

NORTH TRELLIS SECTION 3 | 1/2" = 1'-0" | 9

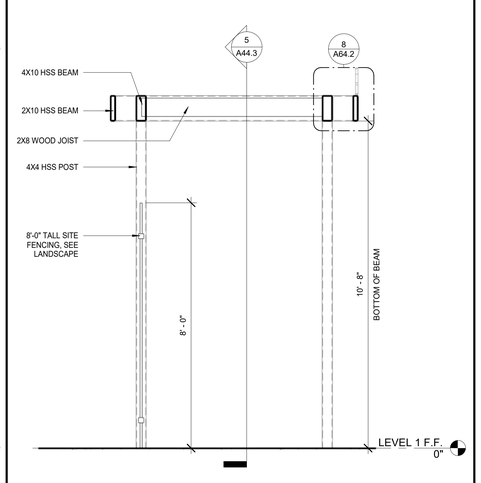

NORTH TRELLIS SECTION 2 | 1/2" = 1'-0" | 8

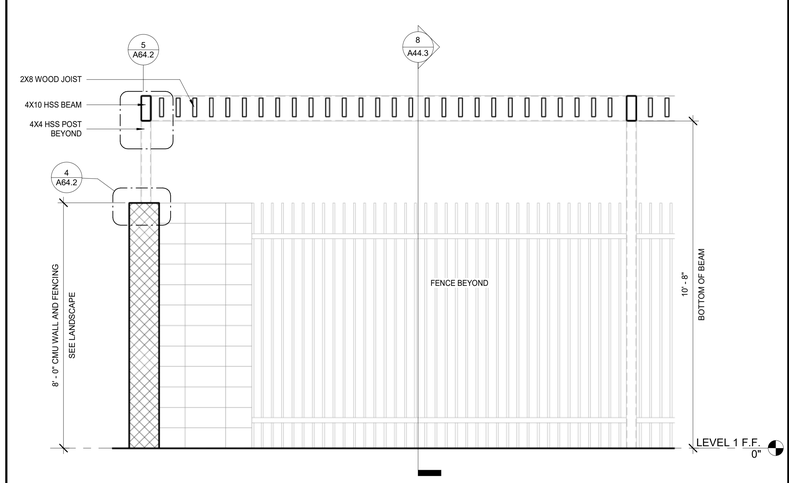

NORTH TRELLIS SECTION 1 | 1/2" = 1'-0" | 5

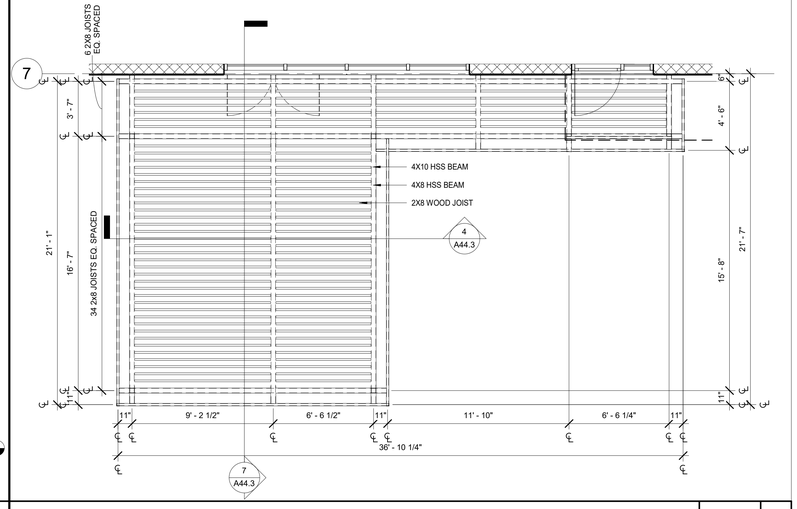

ENLARGED SOUTH TRELLIS SECOND FLOOR PLAN | 1/4" = 1'-0" | 2

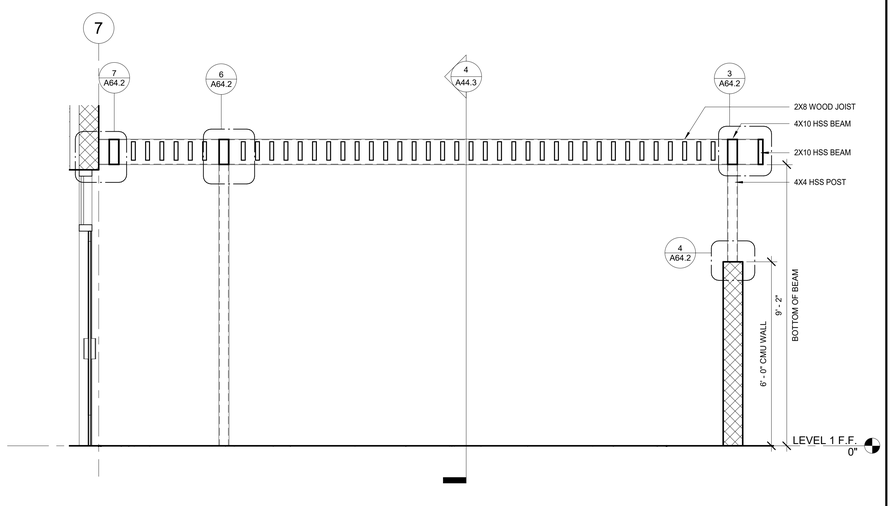

SOUTH TRELLIS SECTION 2 | 1/2" = 1'-0" | 7

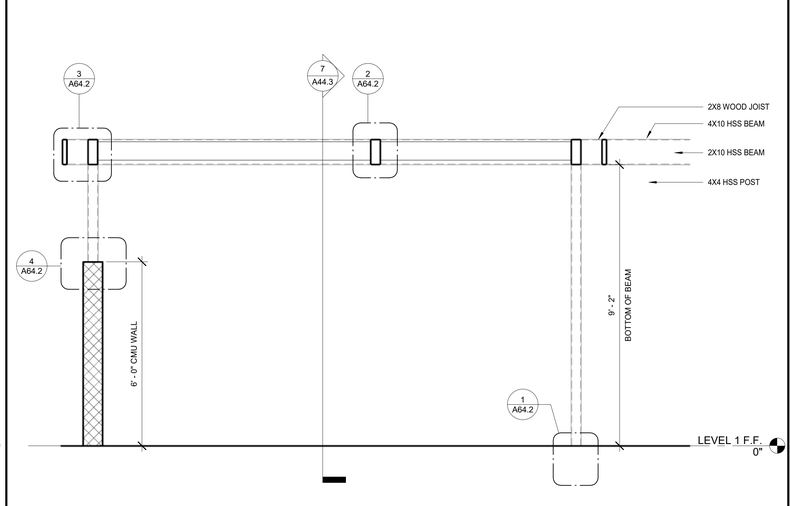

SOUTH TRELLIS SECTION 1 | 1/2" = 1'-0" | 4

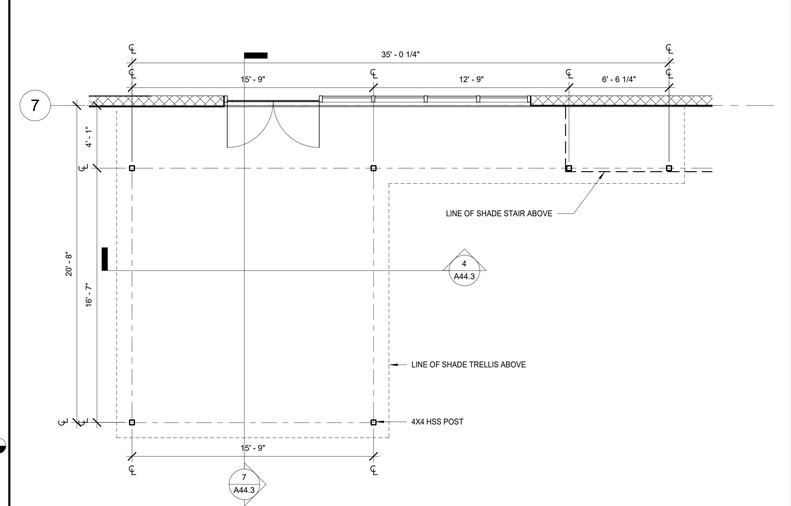

ENLARGED SOUTH TRELLIS FIRST FLOOR PLAN | 1/4" = 1'-0" | 1

PREPARED BY:
SVA ARCHITECTS
6 HUTTON CENTRE DR, SUITE 1150
SANTA ANA, CA 92707
T 949.809.3380 WWW.SVA-ARCHITECTS.COM

THIS DOCUMENT CONTAINS INFORMATION PROPRIETARY TO SVA ARCHITECTS INC. AND IS FURNISHED IN CONFIDENCE FOR THE LIMITED PURPOSE OF EVALUATION, BIDDING OR REVIEW. THIS DOCUMENT OR ITS CONTENTS MAY NOT BE USED FOR ANY OTHER PURPOSE AND MAY NOT BE REPRODUCED OR DISCLOSED TO OTHERS WITHOUT THE PRIOR WRITTEN CONSENT OF SVA ARCHITECTS INC. ALL RIGHTS RESERVED, © COPYRIGHT 2018.

LICENSED ARCHITECT ROBERT M. SIMONDS No. C-19001 JAN. 31, 2025 STATE OF CALIFORNIA

B.M.: THE CITY OF GARDENA BENCHMARK NO. SD-15 ELEV. = 43.508'

REVISIONS

NO.	DESCRIPTION	DATE	APPROVED
1	90% CD SUBMITTAL	12/15/2022	
2	100% CD SUBMITTAL	05/01/2023	
3	FINAL SUBMITTAL	06/30/2023	

CITY OF GARDENA
DEPARTMENT OF PUBLIC WORKS - ENGINEERING
TRELLIS PLANS AND SECTIONS
COMMUNITY AQUATICS & SENIOR CENTER
A44.3

	INITIAL	DATE
DESIGNED BY	AP/EC	05/25/2022
DRAWN BY	NC	06/20/23
CHECKED BY	DB	06/29/23

APPROVED BY:
APPROVED BY: DIRECTOR OF PUBLIC WORKS
SHT. 66 OF 195 DWG. NO. S-2606

CARDENA COMMUNITY AQUATICS AND SENIOR CENTER - CITY SUBMITTAL SET
PLOT DATE: 12/19/2023 8:37:47 AM
PLOT BY: C:\Users\dbrandtsvs-gardena\Gardena Community Pool and Senior Center_dbrandtsvs-gardena.rvt

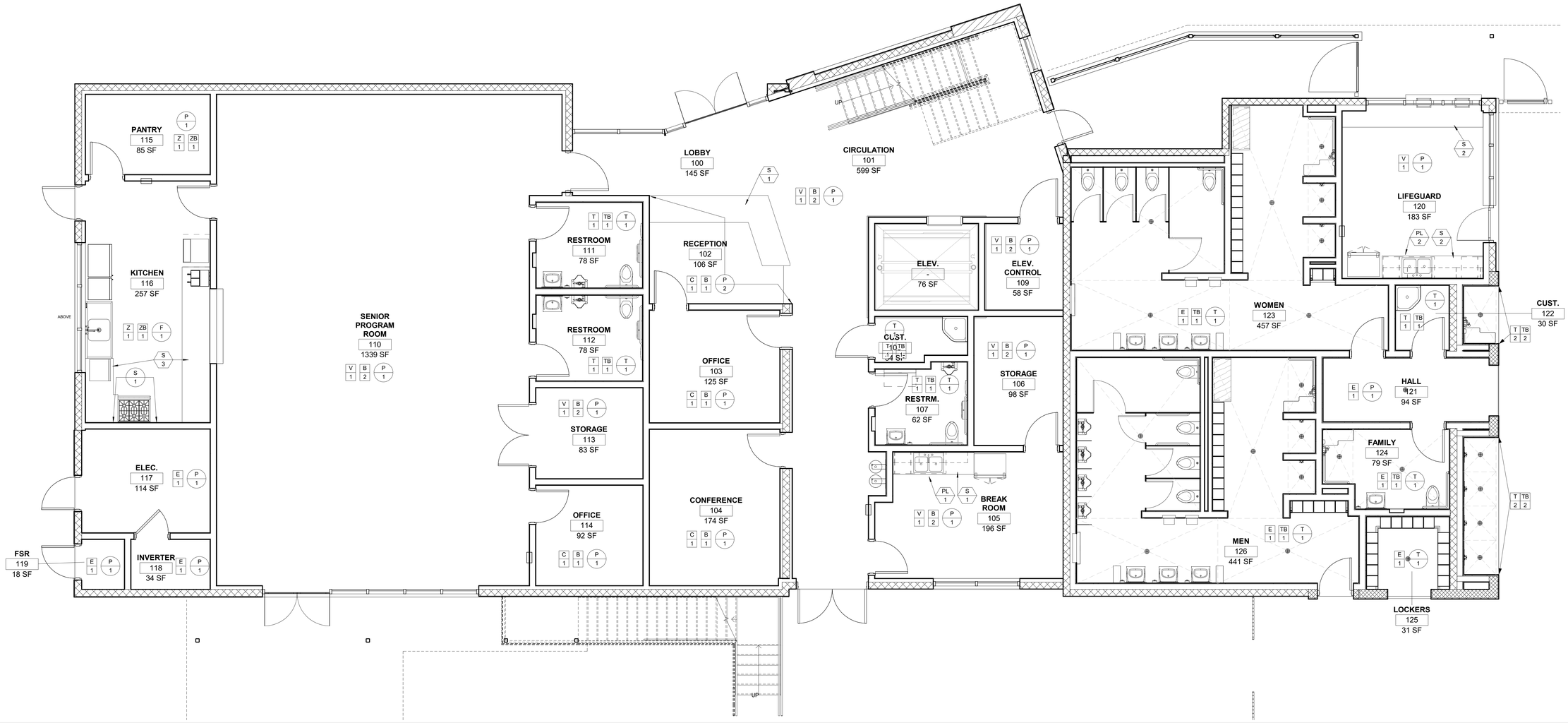

FIRST FLOOR INTERIOR FINISH PLAN

1/4" = 1'-0" | 1

FINISH SCHEDULE - FIRST FLOOR

#	NAME	FLOOR	BASE	WALL MATERIAL	WALL FINISH	CEILING MATERIAL	CEILING FINISH	COMMENTS
-	ELEV.							
100	LOBBY	V-1	B-2	GB	P-1	OTS	PAINTED	
101	CIRCULATION	V-1	B-2	GB	P-1	GB	PAINTED	OTS PER RCP
102	RECEPTION	C-1	B-1	GB	P-2	GB	PAINTED	
103	OFFICE	C-1	B-1	GB	P-1	ACT-1	M.F.R	
104	CONFERENCE	C-1	B-1	GB	P-1	ACT-1	M.F.R	
105	BREAK ROOM	V-1	B-2	GB	P-1	ACT-1	M.F.R	
106	STORAGE	V-1	B-2	GB	P-1	ACT-1	M.F.R	
107	RESTRM.	T-1	TB-1	TILE	T-1	GB	PAINTED	
108	CUST.	T-1	TB-1	TILE	T-1	OTS	PAINTED	
109	ELEV. CONTROL	V-1	B-2	GB	P-1	GB	PAINTED	
110	SENIOR PROGRAM ROOM	V-1	B-2	GB	P-1	ACT-1	M.F.R	
111	RESTROOM	T-1	TB-1	TILE	T-1	GB	PAINTED	
112	RESTROOM	T-1	TB-1	TILE	T-1	GB	PAINTED	
113	STORAGE	V-1	B-2	GB	P-1	ACT-1	M.F.R	
114	OFFICE	C-1	B-1	GB	P-1	ACT-1	M.F.R	
115	PANTRY	Z-1	ZB-1	GB	P-1	ACT-1	M.F.R	
116	KITCHEN	Z-1	ZB-1	FRP / SS	F-1 / SS-1	GB	PAINTED	
117	ELEC.	E-1	B-1	GB	P-1	GB	PAINTED	
118	INVERTER	E-1	B-1	GB	P-1	GB	PAINTED	
119	FSR	E-1	B-1	GB	P-1	OTS	PAINTED	
120	LIFEGUARD	V-1	B-2	GB	P-1	ACT-1	M.F.R	
121	HALL	E-1	-	-	-	-	-	STUCCO WALLS AND CEILING; COLOR TO MATCH EXT. ELEVATIONS
122	CUST.	T-1	TB-1	TILE	T-1	GB	PAINTED	
123	WOMEN	E-1	TB-1	TILE	T-1	GB	PAINTED	
124	FAMILY	E-1	TB-1	TILE	T-1	GB	PAINTED	
125	LOCKERS	E-1	TB-1	TILE	T-1	GB	PAINTED	
126	MEN	E-1	TB-1	TILE	T-1	GB	PAINTED	

FINISH SCHEDULE

FLOORS

- C-1: CARPET TILE C-1 - BENTLY MILLS STYLE COIN-OP II 18"X36" COLOR - BOTS 400061; BRICK INSTALLATION METHOD
- T-1: CERAMIC FLOOR TILE; DAL TILE 12"X24"; COLOR - TBD; (COVED WALL BASE TO MATCH FLOOR COLOR TILE)
- T-2: CERAMIC FLOOR TILE; DAL TILE KEYSTONES 2"X2"; COLOR - TBD; (COVED WALL BASE TO MATCH FLOOR COLOR TILE)
- V-1: RESILIENT FLOORING - 6"X48" LVP COLOR - TBD
- E-1: EXPOSED CONCRETE TOPPING SLAB; INTEGRAL COLOR TBD CLEAR EPOXY SEALANT, SEE SPECS
- Z-1: URETHANE FLOOR COATING; COLOR - TBD (COVED WALL BASE TO BE INTEGRAL BUILD UP)
- B-1: 4" HIGH RUBBER BASE; COLOR - TBD
- B-2: 4" HIGH COVED RUBBER BASE; COLOR - TBD
- TB-1: TILE COVED BASE; 4"X12"; COLOR - TBD
- TB-2: TILE COVED BASE; 2"X2"; COLOR - TBD
- ZB-1: 6" HIGH INTEGRAL URETHANE COVED BASE; COLOR - TBD

WALLS

- P-1: GENERAL AREA PAINT COLOR P-1; COLOR TBD
- P-2: ACCENT PAINT COLOR P-2; COLOR TBD
- T-1: RESTROOM WALL TILE T-1 - DALTILE - 4"X24" SEMI-GLOSS; FIELD COLOR: TBD; ACCENT STRIPE COLOR; TBD
- T-2: WALL TILE T-2 - DALTILE - 2"X2" SEMI-GLOSS; COLOR: TBD
- F-1: FRP WALL PANELING COLOR; TBD
- S-1: SS WALL PANELING COLOR: TBD

MILLWORK

- PL-1: WOOD-GRAIN PLASTIC LAMINATE #1 - CABINETS - WILSONART; 7960K-18 STUDIO TEAK LINEARITY FINISH
- PL-2: PLASTIC LAMINATE #2 - CABINETS - WILSONART COLOR TBD (MATTE FINISH)
- S-1: ONE QUARTZ SURFACE #1 - DALTILE; OQ53 STATUARY UNITY; MARBLE LOO
- S-2: ONE QUARTZ SURFACE #2 - DALTILE; NQ66 FRESH LINENS; MONOCHROMATIC LOOK
- S-3: STAINLESS STEEL SURFACE - CUSTOM COUNTER; FOOD GRADE FINISH

MISCELLANEOUS

- PT-1: TOILET PARTITIONS (TYPICAL ALL ROOMS) - PHENOLIC COLOR TBD

CEILINGS

- ACT-1: 2' x 4' SUSPENDED ACOUSTICAL CEILING - SEE SPECS
- GB: GYP. BOARD CEILING; COLOR TO BE P-1
- OTS: EXPOSED; METAL DECK, STRUCTURAL FRAMING AND DUCTWORK TO BE PREPPED AND PAINTED P-1

INTERIOR FINISH LEGEND

PREPARED BY:
SVA ARCHITECTS
6 HUTTON CENTRE DR, SUITE 1150
SANTA ANA, CA 92707
T 949.809.3380 WWW.SVA-ARCHITECTS.COM

THIS DOCUMENT CONTAINS INFORMATION PROPRIETARY TO SVA ARCHITECTS INC. AND IS FURNISHED IN CONFIDENCE FOR THE LIMITED PURPOSE OF EVALUATION, BIDDING OR REVIEW. THIS DOCUMENT OR ITS CONTENTS MAY NOT BE USED FOR ANY OTHER PURPOSE AND MAY NOT BE REPRODUCED OR DISCLOSED TO OTHERS WITHOUT THE PRIOR WRITTEN CONSENT OF SVA ARCHITECTS INC. ALL RIGHTS RESERVED. © COPYRIGHT 2016.

LICENSED ARCHITECT ROBERT M. SIMPSON No. C-18001 JAN. 31, 2025 STATE OF CALIFORNIA

REVISIONS

NO.	DESCRIPTION	DATE	APPROVED
1	90% CD SUBMITTAL	12/15/2022	
2	100% CD SUBMITTAL	05/01/2023	
3	FINAL SUBMITTAL	06/30/2023	

B.M.: THE CITY OF GARDENA BENCHMARK NO. SD-15 ELEV. = 43.508'

CITY OF GARDENA
DEPARTMENT OF PUBLIC WORKS - ENGINEERING

FIRST FLOOR INTERIOR FINISH SCHEDULE

COMMUNITY AQUATICS & SENIOR CENTER

A50.1

	INITIAL	DATE	APPROVED BY:
DESIGNED BY	AP/EC	05/25/2022	
DRAWN BY	NC	06/20/23	APPROVED BY: DIRECTOR OF PUBLIC WORKS
CHECKED BY	DB	06/29/23	

SHT. 67 OF 195 DWG. NO. 5-2606

CARDENA COMMUNITY AQUATICS AND SENIOR CENTER - CITY SUBMITTAL SET
PLOT DATE: 6/30/2023 9:00:07 AM
PLOT BY: C:\Users\nicolec\Documents\Gardena Community Pool and Senior Center_dmsvaltrra-jon-file-c-6_ccm.rvt

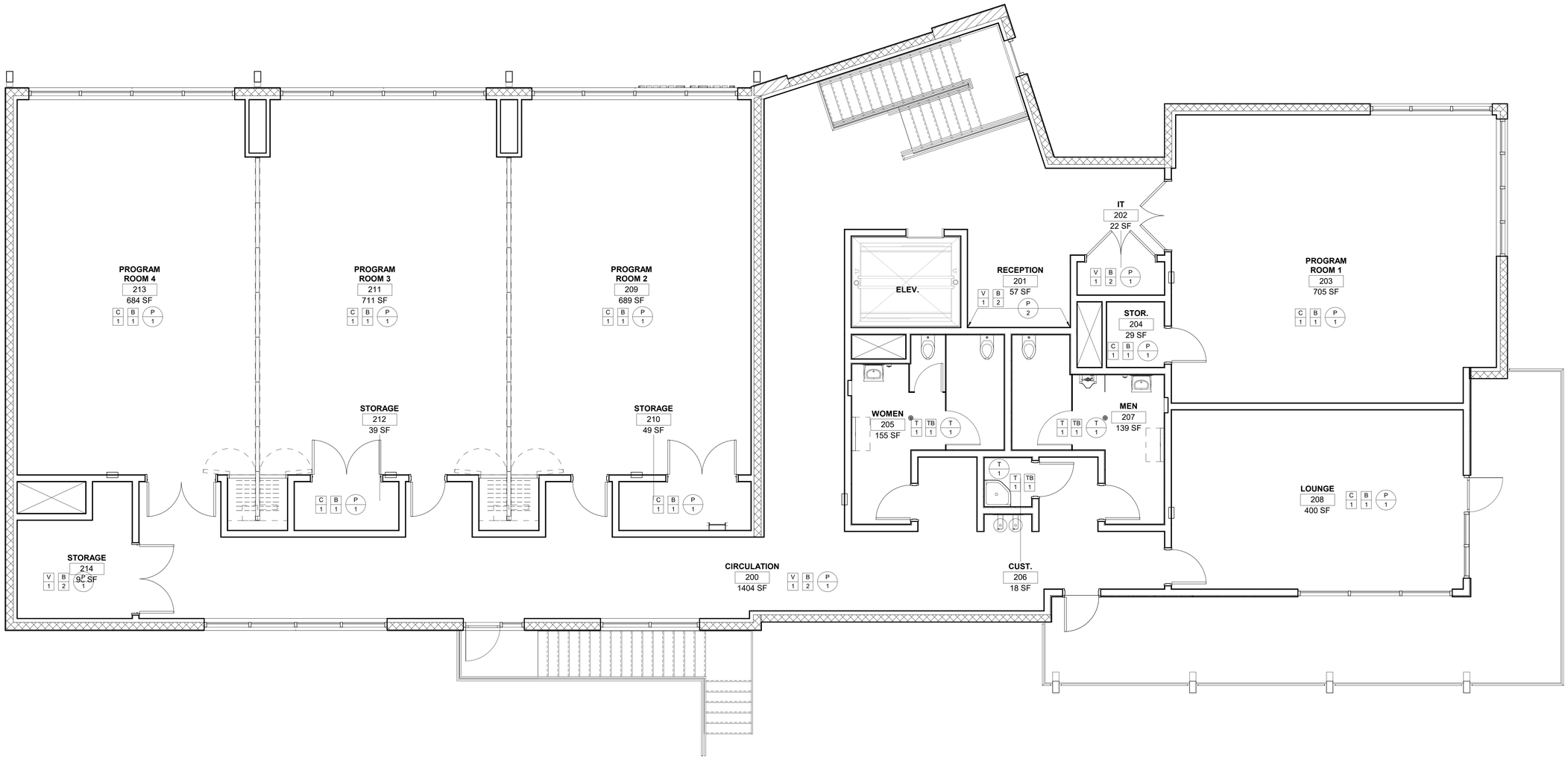

SECOND FLOOR INTERIOR FINISH PLAN

1/4" = 1'-0" | 1

FINISH SCHEDULE

FINISH SCHEDULE - SECOND FLOOR								
				WALL		CEILING		
#	NAME	FLOOR	BASE	MATERIAL	FINISH	MATERIAL	FINISH	COMMENTS
200	CIRCULATION	V-1	B-2	GB	P-1	GB	PAINTED	
201	RECEPTION	V-1	B-2	GB	P-1 / P-2	GB	PAINTED	
202	IT	V-1	B-2	GB	P-1	OTS	PAINTED	
203	PROGRAM ROOM 1	C-1	B-1	GB	P-1	ACT-1	M.F.R	
204	STOR.	C-1	B-1	GB	P-1	GB	PAINTED	
205	WOMEN	T-1	TB-1	TILE	T-1	GB	PAINTED	
206	CUST.	T-1	TB-1	TILE	T-1	OTS	PAINTED	
207	MEN	T-1	TB-1	TILE	T-1	GB	PAINTED	
208	LOUNGE	C-1	B-1	GB	P-1	OTS	PAINTED	
209	PROGRAM ROOM 2	C-1	B-1	GB	P-1	OTS	PAINTED	
210	STORAGE	C-1	B-1	GB	P-1	GB	PAINTED	
211	PROGRAM ROOM 3	C-1	B-1	GB	P-1	OTS	PAINTED	
212	STORAGE	C-1	B-1	GB	P-1	GB	PAINTED	
213	PROGRAM ROOM 4	C-1	B-1	GB	P-1	OTS	PAINTED	
214	STORAGE	V-1	B-2	GB	P-1	GB	PAINTED	

INTERIOR FINISH LEGEND

FLOORS

- C 1 — CARPET TILE C-1 - BENTLY MILLS STYLE COIN-OP II 18"X36" COLOR - BOTS 400061; BRICK INSTALLATION METHOD
- T 1 — CERAMIC FLOOR TILE; DAL TILE 12"X24"; COLOR - TBD; (COVED WALL BASE TO MATCH FLOOR COLOR TILE)
- T 2 — CERAMIC FLOOR TILE; DAL TILE KEYSTONES 2"X2"; COLOR - TBD; (COVED WALL BASE TO MATCH FLOOR COLOR TILE)
- V 1 — RESILIENT FLOORING - 6"X48" LVP COLOR - TBD
- E 1 — EXPOSED CONCRETE TOPPING SLAB; INTEGRAL COLOR TBD CLEAR EPOXY SEALANT, SEE SPECS
- Z 1 — URETHANE FLOOR COATING; COLOR - TBD (COVED WALL BASE TO BE INTEGRAL BUILD UP)
- B 1 — 4" HIGH RUBBER BASE; COLOR - TBD
- B 2 — 4" HIGH COVED RUBBER BASE; COLOR - TBD
- TB 1 — TILE COVED BASE; 4"X12"; COLOR - TBD
- TB 2 — TILE COVED BASE: 2"X2"; COLOR - TBD
- ZB 1 — 6" HIGH INTEGRAL URETHANE COVED BASE; COLOR - TBD

WALLS

- P 1 — GENERAL AREA PAINT COLOR P-1; COLOR TBD
- P 2 — ACCENT PAINT COLOR P-2; COLOR TBD
- T 1 — RESTROOM WALL TILE T-1 - DALTILE - 4"X24" SEMI-GLOSS; FIELD COLOR: TBD; ACCENT STRIPE COLOR; TBD
- T 2 — WALL TILE T-2 - DALTILE - 2"X2" SEMI-GLOSS; COLOR: TBD
- F 1 — FRP WALL PANELING COLOR: TBD
- S 1 — SS WALL PANELING COLOR: TBD

MILLWORK

- PL 1 — WOOD-GRAIN PLASTIC LAMINATE #1 - CABINETS - WILSONART; 7960K-18 STUDIO TEAK LINEARITY FINISH
- PL 2 — PLASTIC LAMINATE #2 - CABINETS - WILSONART COLOR TBD (MATTE FINISH)
- S 1 — ONE QUARTZ SURFACE #1 - DALTILE; OQ53 STATUARY UNITY; MARBLE LOO
- S 2 — ONE QUARTZ SURFACE #2 - DALTILE; NQ66 FRESH LINENS; MONOCHROMATIC LOOK
- S 3 — STAINLESS STEEL SURFACE - CUSTOM COUNTER; FOOD GRADE FINISH

MISCELLANEOUS

- PT 1 — TOILET PARTITIONS (TYPICAL ALL ROOMS) - PHENOLIC COLOR TBD

CEILINGS

- **ACT-1** 2' x 4' SUSPENDED ACOUSTICAL CEILING - SEE SPECS
- **GB** GYP. BOARD CEILING; COLOR TO BE P-1
- **OTS** EXPOSED; METAL DECK, STRUCTURAL FRAMING AND DUCTWORK TO BE PREPPED AND PAINTED P-1

PREPARED BY:

SVA ARCHITECTS
6 HUTTON CENTRE DR, SUITE 1150
SANTA ANA, CA 92707
T 949.809.3380 WWW.SVA-ARCHITECTS.COM

THIS DOCUMENT CONTAINS INFORMATION PROPRIETARY TO SVA ARCHITECTS INC. AND IS FURNISHED IN CONFIDENCE FOR THE LIMITED PURPOSE OF EVALUATION, BIDDING OR REVIEW. THIS DOCUMENT OR ITS CONTENTS MAY NOT BE USED FOR ANY OTHER PURPOSE AND MAY NOT BE REPRODUCED OR DISCLOSED TO OTHERS WITHOUT THE PRIOR WRITTEN CONSENT OF SVA ARCHITECTS INC. ALL RIGHTS RESERVED. © COPYRIGHT 2015.

LICENSED ARCHITECT ROBERT M. SIMPSON No. C-18501 JAN. 31, 2025 STATE OF CALIFORNIA

REVISIONS

NO.	DESCRIPTION	DATE	APPROVED
1	90% CD SUBMITTAL	12/15/2022	
2	100% CD SUBMITTAL	05/01/2023	
3	FINAL SUBMITTAL	06/30/2023	

B.M.: THE CITY OF GARDENA BENCHMARK NO. SD-15 ELEV. = 43.508'

CITY OF GARDENA
DEPARTMENT OF PUBLIC WORKS - ENGINEERING

SECOND FLOOR INTERIOR FINISH SCHEDULE

COMMUNITY AQUATICS & SENIOR CENTER

A50.2

	INITIAL	DATE
DESIGNED BY	AP/EC	05/25/2022
DRAWN BY	NC	06/20/23
CHECKED BY	DB	06/29/23

APPROVED BY: APPROVED BY: DIRECTOR OF PUBLIC WORKS

SHT. 68 OF 195 DWG. NO. 5-2606

CARDENA COMMUNITY AQUATICS AND SENIOR CENTER - CITY SUBMITTAL SET
PLOT DATE: 6/30/2023 9:01:21 AM
PLOT BY: Nicholas Cabrera
PLOT NAME: G:\Projects\2021\21-22\Gardena Community Pool and Senior Center_Gardena\Architecture\Sheets\A-Cover.rvt

DOOR SCHEDULE

NUMBER	WIDTH	HEIGHT	DOOR TYPE	DOOR MATERIAL	DOOR FINISH	FRAME MATERIAL	FRAME FINISH	DETAILS HEAD DETAIL	DETAILS JAMB	DETAILS THRESHOLD	HARDWARE GROUP	HARDWARE PH	FIRE RATING	REMARKS
100	6' - 0"	8' - 0"	FG-FG	AL/GL	AC	AL	AC	13/A63.1	13/A63.1	5/A63.2	05	YES	NR	CR, AO
101-1	3' - 0"	8' - 0"	FG	AL/GL	AC	AL	AC	15/A63.1	15/A63.1	5/A63.2	01	YES	NR	CR, AO
101-2	6' - 4"	7' - 10"	FG-FG	AL/GL	AC	AL	AC	12/A63.1	12/A63.1	5/A63.2	05	YES	NR	CR, AO
103-1	3' - 0"	7' - 0"	FG	AL/GL	AC	AL	AC	4/A63.1	4/A63.1	9/A63.1	14		NR	CR
103-2	3' - 0"	7' - 0"	FG	AL/GL	AC	AL	AC	4/A63.1	4/A63.1	9/A63.1	16		NR	CR
104	3' - 0"	7' - 0"	FG	AL/GL	AC	AL	AC	4/A63.1	4/A63.1	9/A63.1	14		NR	CR
105	3' - 0"	7' - 0"	FG	AL/GL	AC	AL	AC	4/A63.1	4/A63.1	9/A63.1	14		NR	CR
106	3' - 0"	7' - 0"	F	SCW	P	AL	AC	4/A63.1	4/A63.1	9/A63.1	17		NR	CR
107	3' - 0"	7' - 0"	F	SCW	P	AL	AC	4/A63.1	4/A63.1	9/A63.1	24		NR	
108	3' - 0"	7' - 0"	F	SCW	P	AL	AC	4/A63.1	4/A63.1	9/A63.1	28		NR	
109	3' - 6"	7' - 0"	F	SCW	P	AL	AC	4/A63.1	4/A63.1	9/A63.1	32		NR	
110-1	3' - 6"	7' - 0"	FG	AL/GL	AC	HM	P	1/A63.1	1/A63.1	9/A63.1	13	YES	NR	CR, AO
110-2	6' - 0"	7' - 0"	FG-FG	AL/GL	AC	AL	AC	13/A63.1	13/A63.1	5/A63.2	05			CR, AO
111	3' - 0"	7' - 0"	F	SCW	P	HM	P	1/A63.1	1/A63.1	9/A63.1	25		NR	
112	3' - 0"	7' - 0"	F	SCW	P	HM	P	1/A63.1	1/A63.1	9/A63.1	25		NR	
113	5' - 8"	7' - 0"	F-F	SCW	P	HM	P	1/A63.1	1/A63.1	9/A63.1	22		NR	CR
114	3' - 0"	7' - 0"	FG	AL/GL	AC	AL	AC	4/A63.1	4/A63.1	9/A63.1	14		NR	CR
115	3' - 0"	7' - 0"	F	SCW	P	HM	P	1/A63.1	1/A63.1	9/A63.1	17		NR	CR
116-1	3' - 0"	7' - 0"	N	SCW/GL	P	HM	P	1/A63.1	1/A63.1	9/A63.1	14		NR	CR
116-2	3' - 0"	8' - 0"	F	HM	P	HM	P	2/A63.1	2/A63.1	7/A63.1	07	YES	NR	CR
116-3	6' - 11"	8' - 0"	OR	AL	AC	SS	FF	-	-	-	18		NR	OVER HEAD ROLLING COUNTER DOOR
117	3' - 0"	8' - 0"	F	HM	P	HM	P	6/A63.1	3/A63.1	7/A63.1	08		NR	
118	3' - 0"	7' - 0"	F	HM	P	HM	P	1/A63.1	1/A63.1	9/A63.1	29		NR	
119	3' - 0"	8' - 0"	F	HM	P	HM	P	6/A63.1	3/A63.1	7/A63.1	08		NR	
120	3' - 0"	7' - 9 1/2"	FG	AL/GL	AC	AL	AC	12/A63.1	12,13/A63.1	5/A63.2	04		NR	CR
122	3' - 0"	7' - 0"	F	HM	P	HM	P	14/A63.1	14/A63.1	9/A63.2	30		NR	
123	3' - 0"	7' - 0"	F	HM	P	HM	P	14/A63.1	14/A63.1	9/A63.2	26		NR	
124	3' - 0"	7' - 0"	F	HM	P	HM	P	14/A63.1	14/A63.1	9/A63.2	25		NR	
126	3' - 0"	8' - 0"	F	HM	P	HM	P	2/A63.1	2/A63.1	7/A63.1	26		NR	
200-1	3' - 0"	8' - 0"	FG	AL/GL	AC	AL	AC	12/A63.2	11/A63.2	7/A63.1 SIM	02		NR	
200-2	3' - 0"	7' - 7"	FG	AL/GL	AC	AL	AC	15/A63.1	13/A63.1	10/A63.1	03	YES	NR	CR
202	6' - 0"	7' - 0"	F-F	SCW	P	AL	AC	4/A63.1	4/A63.1	9/A63.1	34		NR	
203	6' - 0"	7' - 0"	N-N	SCW/GL	P	HM	P	1/A63.1	1/A63.1	9/A63.1	21	YES	NR	CR
204	3' - 0"	7' - 0"	F	SCW	P	AL	AC	4/A63.1	4/A63.1	9/A63.1	15		NR	CR
205	3' - 0"	7' - 0"	F	SCW	P	AL	AC	4/A63.1	4/A63.1	9/A63.1	27		NR	
206	3' - 0"	7' - 0"	F	SCW	P	AL	AC	4/A63.1	4/A63.1	9/A63.1	31		NR	
207	3' - 0"	7' - 0"	F	SCW	P	AL	AC	4/A63.1	4/A63.1	9/A63.1	27		NR	
208-1	3' - 0"	7' - 0"	FG	AL/GL	AC	AL	AC	4/A63.1	4/A63.1	9/A63.1	14		NR	CR
208-2	3' - 0"	8' - 0"	FG	AL/GL	AC	AL	AC	13/A63.1	13/A63.1, 11/A63.2	5/A63.2 SIM	03		NR	CR
209	3' - 0"	7' - 0"	N	SCW/GL	P	AL	AC	4/A63.1	4/A63.1	9/A63.1	19	YES	NR	CR
210-1	6' - 0"	7' - 0"	F-F	SCW	P	AL	AC	4/A63.1	3/A63.1	9/A63.1	23		NR	CR
210-2	3' - 0"	1' - 0 19/32"	RH	ST	FF	ST	FF	-	-	-	33		NR	ROOF ACCESS HATCH
211	3' - 0"	7' - 0"	N	SCW/GL	P	AL	AC	4/A63.1	4/A63.1	9/A63.1	19	YES	NR	CR
212	6' - 0"	7' - 0"	F-F	SCW	P	AL	AC	4/A63.1	4/A63.1	9/A63.1	22		NR	CR
213	6' - 0"	7' - 0"	N-N	SCW/GL	P	AL	AC	4/A63.1	4/A63.1	9/A63.1	20	YES	NR	CR
214	6' - 0"	7' - 0"	F-F	SCW	P	AL	AC	4/A63.1	4/A63.1	9/A63.1	35		NR	
301	3' - 0"	7' - 0"	F	HM	P	HM	P	6/A63.1	3/A63.1	7/A63.1	09	YES	NR	
302	5' - 8"	7' - 0"	F-F	HM	P	HM	P	6/A63.1	3/A63.1	7/A63.1	06		NR	CR
303	5' - 8"	7' - 0"	F-F	HM	P	HM	P	6/A63.1	3/A63.1	7/A63.1	11		NR	
304	5' - 8"	7' - 0"	L-L	HM	P	HM	P	6/A63.1	3/A63.1	7/A63.1	11		NR	
305	5' - 8"	7' - 0"	L-L	HM	P	HM	P	6/A63.1	3/A63.1	7/A63.1	11		NR	
306-2	3' - 0 3/4"	6' - 10"	G-EE	ST	P	ST	P	-	7/A40.2	-	10	YES	NR	PEDESTRIAN GATE AT TRASH ENCLOSURE
306-3	8' - 0"	6' - 10"	G-DD	ST	P	ST	P	-	7/A40.2	-	12		NR	BIN GATE AT TRASH ENCLOSURE

DOOR SCHEDULE

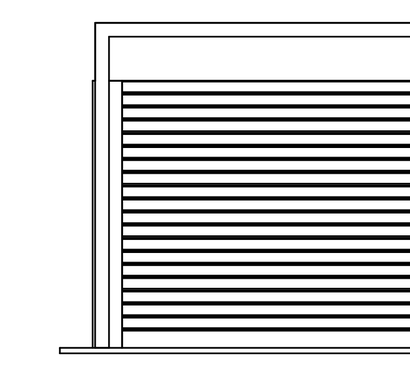

OR OVERHEAD ROLLING

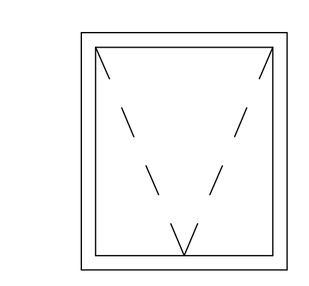

RH ROOF HATCH

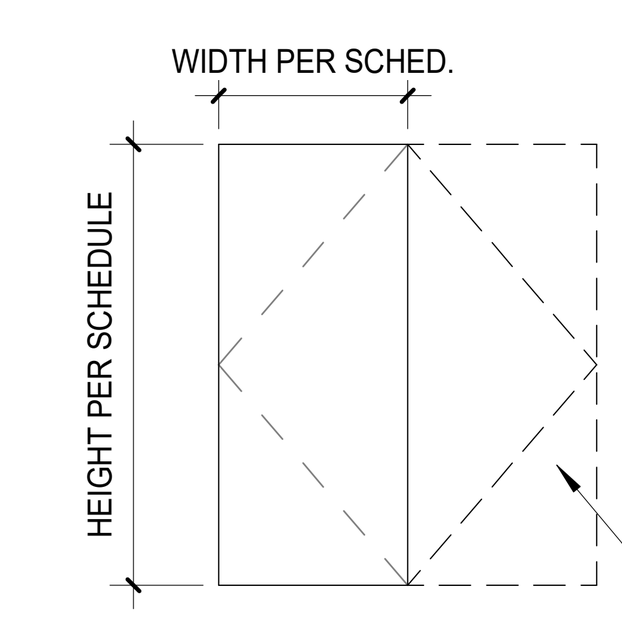

F FLUSH

PAIR WHERE OCCURS - NOTED IN SCHEDULE WITH DOUBLE TAG, I.E. 'G-G"

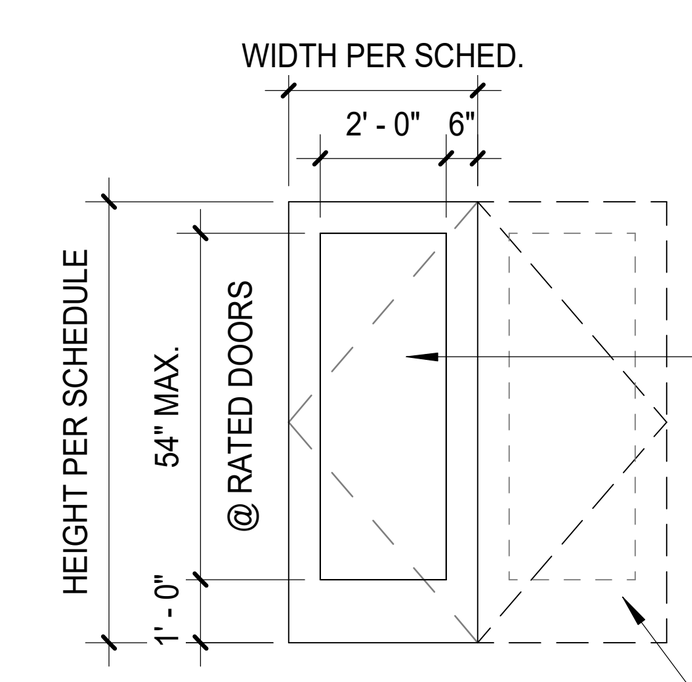

FG FULL GLASS

PAIR WHERE OCCURS - NOTED IN SCHEDULE WITH DOUBLE TAG, I.E. 'FG-FG"

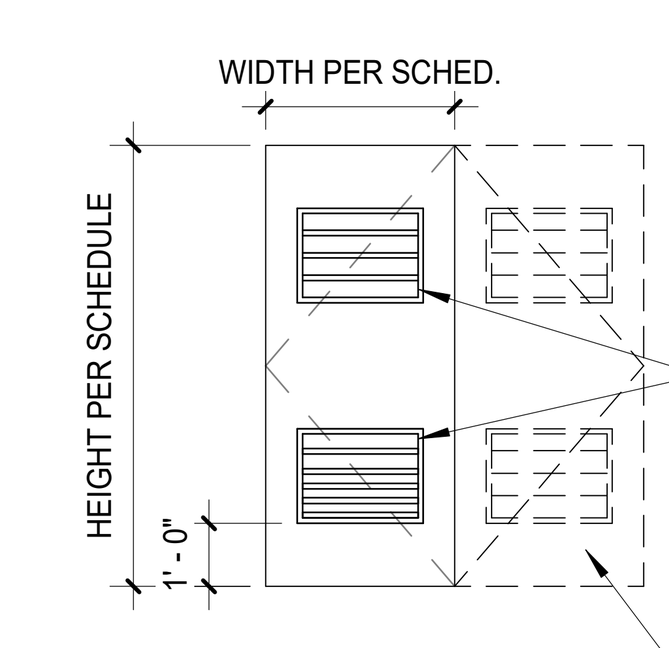

L LOUVER

PAIR WHERE OCCURS - NOTED IN SCHEDULE WITH DOUBLE TAG, I.E. 'L-L'

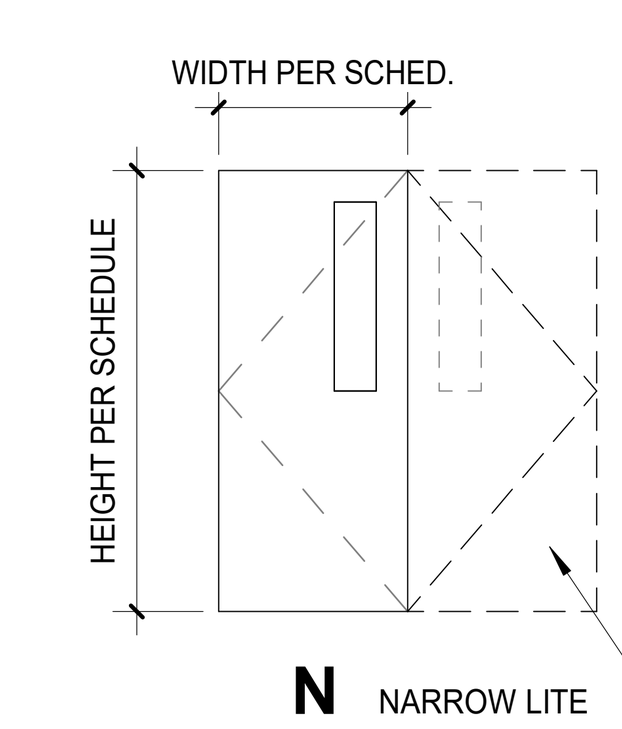

N NARROW LITE

PAIR WHERE OCCURS - NOTED IN SCHEDULE WITH DOUBLE TAG, I.E.'N-N'

DOOR LEGEND

STOREFRONT NOTES:

CLEAR ANODIZED FINISH FOR ALL STOREFRONT MULLIONS, DOORS, ETC.

INCLUDES WINDOW MULLIONS.

COMMENTS:

1. PROVIDE ELECTRONIC HOLD-OPENS FOR EACH LEAF W/ CONNECTION TO FIRE ALARM.
2. EXISTING DOOR TO REMAIN.
3. EXISTING COPPER-CLAD DOOR TO REMAIN - CONTRACTOR TO INCLUDE $5,000 ALLOWANCE FOR REPAIR OF EXISTING METAL.

DOOR COMMENTS LEGEND

AL - ALUMINUM
AC - ANODIZED CLEAR
AO - AUTOMATIC OPENER
BZ - ANODIZED BRONZE
CC - CONCEALED CLOSER
CLR - CLEAR
CR - CARD READER / ACCESS CONTROL
FC - FLOOR CLOSER
FF - FACTORY FINISH
FLFD - FUSIBLE LINK FIRE DAMPER
FP - FIELD PAINT
FPFP - FACTORY PRIMED, FIELD PAINTED
FRA - FIRE RATED ASSEMBLY
FS - FIELD STAINED
GA - GALVANIZED
GL - GLASS OR GLAZING
GS - GALVANIZED STEEL
HM - HOLLOW METAL
KY - FLUOROPOLYMER FINISH (SEE SPECS)
LVR - LOUVER
MF - MILL FINISH
MR - MIRRORED GLASS
MAG - MAGNETIC HOLD OPEN
P - PAINTED (FOR EXISTING FRAMES - PAINT SHALL INCLUDE PREP AND REPAIR OF EXISTING FRAME, TYPICAL
PG - PAINT GRADE
PH - PANIC HARDWARE
PR - PAIR
SCW - SOLID CORE WOOD
SG - STAIN GRAIN
SMC - SURFACE MOUNTED CLOSER
ST - STEEL
SS - STAINLESS STEEL
TEMP - TEMPERED

DOOR NOTES LEGEND

1. LETTER "P" FOLLOWING DOOR TYPE LETTER IN SCHEDULE INDICATES A PAIR OF DOORS. SCHEDULED DIMENSION IS TOTAL FRAME OPENING. BOTH DOOR LEAVES ARE THE SAME SIZE UNLESS OTHERWISE NOTED.

2. LETTER "X" FOLLOWING DOOR TYPE LETTER IN SCHEDULE INDICATES A FIXED PANEL ABOVE DOOR LEAF. DOOR LEAF IS TO BE 7'-0" HIGH. SCHEDULED DIMENSION IS HEIGHT OF ACTIVE DOOR LEAF PLUS FIXED PANEL. FIXED PANEL SHALL BE OF SAME MATERIAL, CONSTRUCTION, THICKNESS, AS FINISH AS ACTIVE DOOR AND PROVIDED BY THE SAME MANUFACTURER AS DOOR.

3. LOUVERS IN FIRE-RATED DOOR ASSEMBLIES TO BE FLFD (FUSIBLE LINK FIRE DAMPER), LOUVERS IN EXTERIOR DOORS TO BE VANDAL-PROOF SECURITY TYPE.

4. GLAZING, ALL GLAZING PANELS IN FIRE-RATED DOOR ASSEMBLIES TO BE RATED GLASS. ALL OTHER GLAZING PANELS IN DOORS TO BE TEMPERED GLASS UNLESS OTHERWISE NOTED.

5. ALL DOORS NOTED AS 1-HOUR, AND 1 1/2-HOUR FIRE-RATED ASSEMBLIES SHALL MEET THE ADDITIONAL REQUIREMENTS OF MAXIMUM 450 F TEMPERATURE RISE ABOVE AMBIENT AFTER 30 MINUTES OF THE FIRE TEST. (CBC SEC. 1005.3.3.5 AND 1005.3.4.4).

6. THICKNESS: ALL DOORS TO BE 1 3/4" THICK UNLESS OTHERWISE NOTED.

7. ALL EXTERIOR DOORS TO HAVE WEATHERSTRIPPING ALL SIDES PER TITLE 24, SECTION T20-1451-1542.

8. ALL WOOD DOORS TO BE SOLID-CORE TYPE.

9. EXIT DOORS SERVING 50 OR MORE OCCUPANTS SHALL OPEN IN THE DIRECTION OF EXIT.

10. EVERY EXIT DOOR SHALL BE OPENABLE FROM THE INSIDE WITHOUT THE USE OF A KEY OR ANY SPECIAL KNOWLEDGE OR EFFORT. ANY SPECIAL LOCKING DEVICES SHALL BE OF THE APPROVED TYPE. CBC CHAPTER 33 AND UFC SECTION 12,104(B).

11. DOOR HARDWARE SHALL COMPLY WITH THE FOLLOWING PER CBC 11B-404.2

    1. OPERABLE BY A SIMPLE EFFORT, NOT GRASPING WRIST MOVEMENT (LEVERS, PANIC DEVICES, OR PULLS).
    2. 5-LB CLOSURE PRESSURE AT INTERIOR DOORS.
    3. 5-LB CLOSURE PRESSURE AT EXTERIOR DOORS.
    4. 5-LB CLOSURE PRESSURE AT FIRE DOORS.
    5. WHEN FIRE DOORS ARE REQUIRED, THE MAXIMUM EFFORT TO OPERATE THE DOOR MAY BE INCREASED TO THE MINIMUM ALLOWABLE BY THE APPROPRIATE ADMINISTRATIVE AUTHORITY, NOT TO EXCEED 15 POUNDS.

12. ALL DOORS INDICATED AS FIRE-RATED ASSEMBLIES TO HAVE CLOSURES AND SMOKE SEALS.

13. ON DOORS IN ALUMINUM FRAMES, PROVIDE ARMORED STRIKE ON JAMB OF ALUMINUM FRAME.

14. EXIT DOORS SHALL HAVE A READILY VISIBLE, DURABLE SIGN ON OR ADJACENT TO THE DOOR STATING, "THIS DOOR TO REMAINED UNLOCKED DURING BUSINESS HOURS." THE SIGN SHALL HAVE 1" HIGH LETTERS ON A CONTRASTING BACKGROUND. THE LOCKING DEVICE MUST BE OF A TYPE THAT WILL BE READILY DISTINGUISHABLE AS LOCKED.

15. DOORS SHALL BE A MINUMUM OF 36" WIDE X 80" HIGH WITH NO SINGLE LEAF EXCEEDING 4'-0" IN WIDTH.

16. BOTTOM 10" OF DOOR TO HAVE SMOOTH UNINTERUPTED SURFACE FOR OPENING BY WHEELCHAIR FOOT REST.

17. CENTER OF HARDWARE TO BE 30" TO 40" ABOVE FLOOR. LATCHING AND LOCKING DOOR TO BE OPERABLE WITH A SINGLE EFFORT BY LEVER OR PUSH-PULL TYPE HARDWARE.

18. PROVIDE DOOR SYMBOLS ON DOORWAYS LEADING TO SANITARY FACILITIES (SEE TOILET ROOM DOOR SIGNAGE). CENTER SYMBOLS ON DOORS AT 60" HEIGHT, AND FINISH IN COLOR CONTRASTING TO THAT OF THE DOOR.

19. THRESHOLDS SHALL BE 1/2" HIGH MAXIMUM WITH A 2:1 DEGREE BEVELED EDGE.

20. THRESHOLD HEIGHT BETWEEN 1/4" AND 1/2" SHALL BE BEVELED AT MAZIMUM 50% SLOPE.

21. ALL EXTERIOR DOOR SHALL HAVE PERIMETER DOOR SOUND SEAL/GASKET.

22. EACH DOOR IN A MEANS OF EGRESS FROM A GROUP A, OR ASSEMBLY AREA NOT CLASSIFIED AS AN ASSEMBLY OCCUPANCY, HAVING AN OCCUPANT LOAD OF 50 OR MORE SHALL NOT BE PROVIDED WITH A LATCH OR LOCK UNLESS IT IS PANIC HARDWARE OR FIRE EXIT HARDWARE. CBC 1010.1.10 CFC 1010.1.10

DOOR GENERAL NOTES

PREPARED BY:

SVA ARCHITECTS
6 HUTTON CENTRE DR, SUITE 1150
SANTA ANA, CA 92707
T 949.809.3380 WWW.SVA-ARCHITECTS.COM

THIS DOCUMENT CONTAINS INFORMATION PROPRIETARY TO SVA ARCHITECTS INC. AND IS FURNISHED IN CONFIDENCE FOR THE LIMITED PURPOSE OF EVALUATION, BIDDING OR REVIEW. THIS DOCUMENT OR ITS CONTENTS MAY NOT BE USED FOR ANY OTHER PURPOSE AND MAY NOT BE REPRODUCED OR DISCLOSED TO OTHERS WITHOUT THE PRIOR WRITTEN CONSENT OF SVA ARCHITECTS INC. ALL RIGHTS RESERVED, © COPYRIGHT 2018.

LICENSED ARCHITECT ROBERT M. SIMONS No. C-18301 JAN. 31, 2025 STATE OF CALIFORNIA

REVISIONS

NO.	DESCRIPTION	DATE	APPROVED
1	90% CD SUBMITTAL	12/15/2022	
2	100% CD SUBMITTAL	05/01/2023	
3	FINAL SUBMITTAL	06/30/2023	

B.M.: THE CITY OF GARDENA BENCHMARK NO. 5D-15 ELEV. = 43.508'

CITY OF GARDENA
DEPARTMENT OF PUBLIC WORKS - ENGINEERING

DOOR SCHEDULE

COMMUNITY AQUATICS & SENIOR CENTER

A52.1

	INITIAL	DATE
DESIGNED BY	AP/EC	05/25/2022
DRAWN BY	NC	06/20/23
CHECKED BY	DB	06/29/23

APPROVED BY:

APPROVED BY: DIRECTOR OF PUBLIC WORKS

SHT. 69 OF 195 DWG. NO. 5-2606

GARDENA COMMUNITY AQUATICS AND SENIOR CENTER - CITY SUBMITTAL SET

FILE PATH: C:\Users\dbrown\Documents\Gardena_Community Pool and Senior Center_dbrown@sva-architects.com.rvt
PLOT TIME: 10/12/2023 10:31:02 AM

STOREFRONT NOTES:

CLEAR ANODIZED FINISH FOR ALL STOREFRONT MULLIONS, DOORS, ETC.

INCLUDES WINDOW MULLIONS.

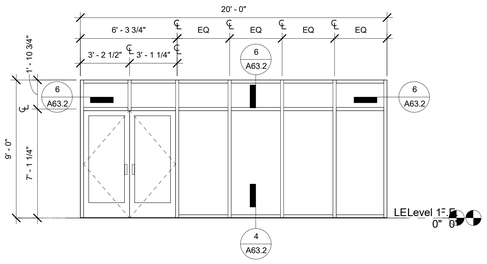

SF-13 | 1/4" = 1'-0" | 16

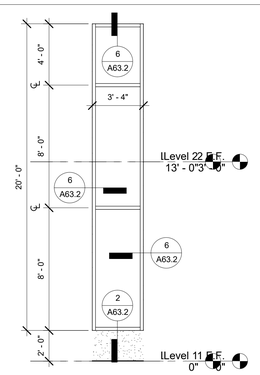

SF-12 | 1/4" = 1'-0" | 12

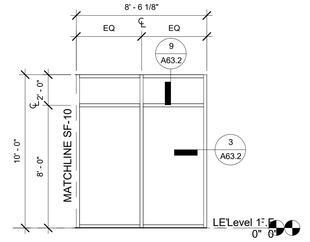

SF-11 | 1/4" = 1'-0" | 8

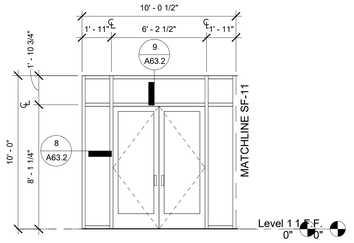

SF-10 | 1/4" = 1'-0" | 4

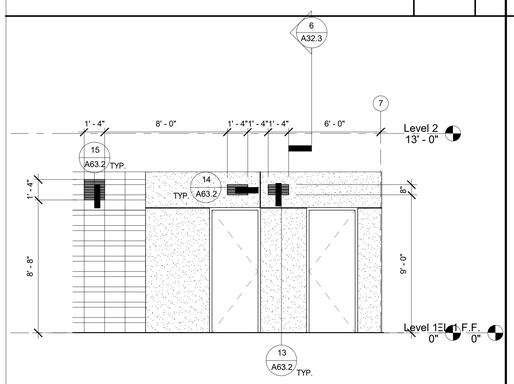

LOUVERS | 1/4" = 1'-0" | 19

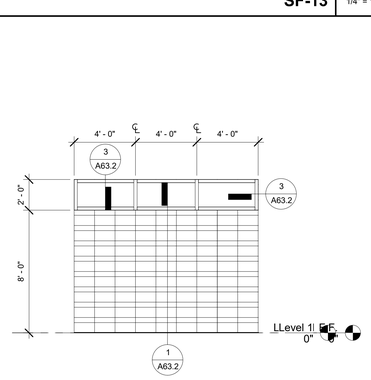

SF-17 | 1/4" = 1'-0" | 15

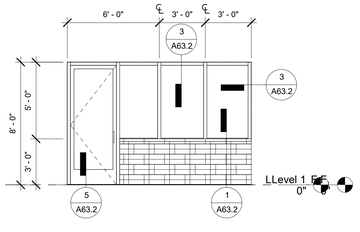

SF-16 | 1/4" = 1'-0" | 11

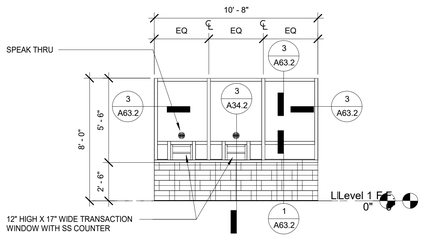

SF-15 | 1/4" = 1'-0" | 7

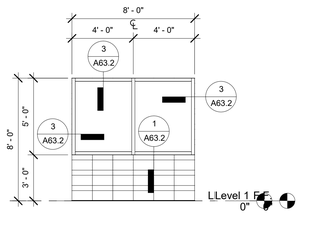

SF-14 | 1/4" = 1'-0" | 3

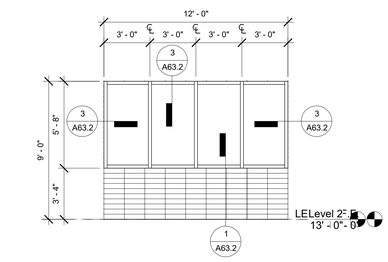

SF-24 | 1/4" = 1'-0" | 18

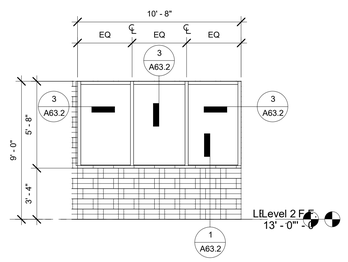

SF-23 | 1/4" = 1'-0" | 14

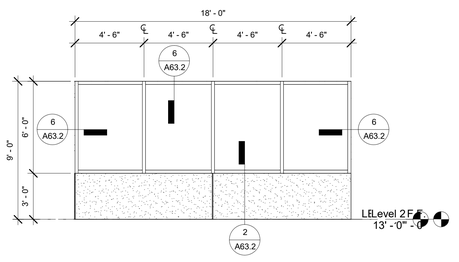

SF-22 | 1/4" = 1'-0" | 10

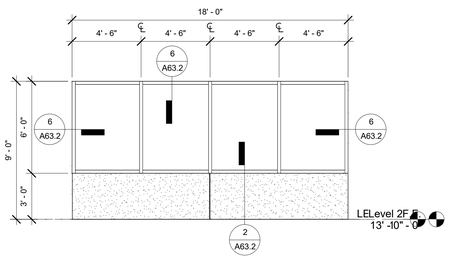

SF-21 | 1/4" = 1'-0" | 6

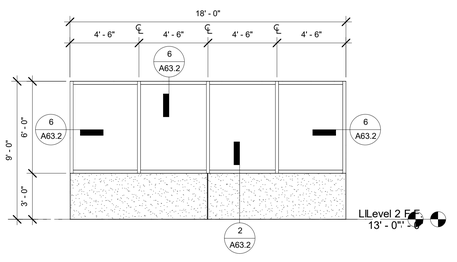

SF-20 | 1/4" = 1'-0" | 2

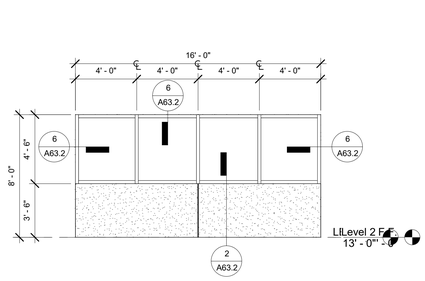

SF-29 | 1/4" = 1'-0" | 17

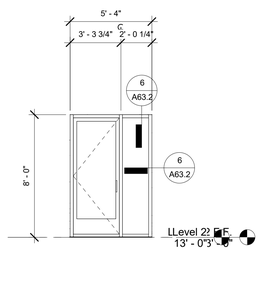

SF-28 | 1/4" = 1'-0" | 13

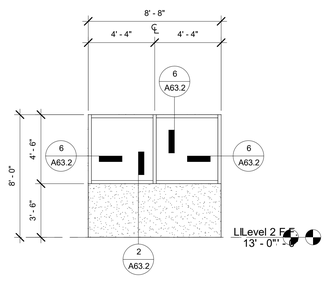

SF-27 | 1/4" = 1'-0" | 9

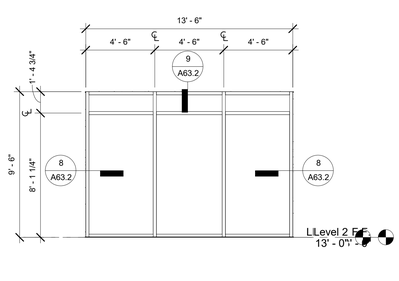

SF-26 | 1/4" = 1'-0" | 5

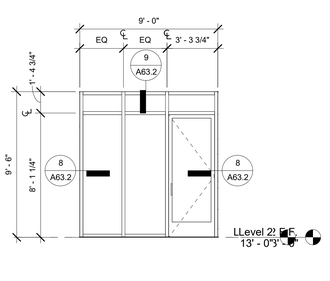

SF-25 | 1/4" = 1'-0" | 1

CARDENA COMMUNITY AQUATICS AND SENIOR CENTER - CITY SUBMITTAL SET

PREPARED BY:

SVA ARCHITECTS
6 HUTTON CENTRE DR, SUITE 1150
SANTA ANA, CA 92707
T 949.809.3380 WWW.SVA-ARCHITECTS.COM

THIS DOCUMENT CONTAINS INFORMATION PROPRIETARY TO SVA ARCHITECTS INC. AND IS FURNISHED IN CONFIDENCE FOR THE LIMITED PURPOSE OF EVALUATION, BIDDING OR REVIEW. IT AS SUCH SHALL NOT BE USED, REPRODUCED OR DISCLOSED TO OTHERS WITHOUT THE PRIOR WRITTEN CONSENT OF SVA ARCHITECTS INC. ALL RIGHTS RESERVED, © COPYRIGHT 2018.

ROBERT M. SIMMONS No. C-13001 JAN. 31, 2025 LICENSED ARCHITECT STATE OF CALIFORNIA

REVISIONS

NO.	DESCRIPTION	DATE	APPROVED
1	90% CD SUBMITTAL	12/15/2022	
2	100% CD SUBMITTAL	05/01/2023	
3	FINAL SUBMITTAL	06/30/2023	

B.M.: THE CITY OF GARDENA BENCHMARK NO. SD-15
ELEV. = 43.508'

CITY OF GARDENA
DEPARTMENT OF PUBLIC WORKS - ENGINEERING

STOREFRONT ELEVATIONS

COMMUNITY AQUATICS & SENIOR CENTER

A52.2

	INITIAL	DATE
DESIGNED BY	AP/EC	05/25/2022
DRAWN BY	NC	06/20/23
CHECKED BY	DS	06/29/23

APPROVED BY:

APPROVED BY: DIRECTOR OF PUBLIC WORKS

SHT. 70 OF 195 DWG. NO. 5-2606

PLOT DATE: 6/30/2023 9:33:33 AM
PLOT NAME: C:\Users\nicole.cruz\Documents\Gardena Community Pool and Senior Center_dbsa-architect-sva1.ctb.ctb

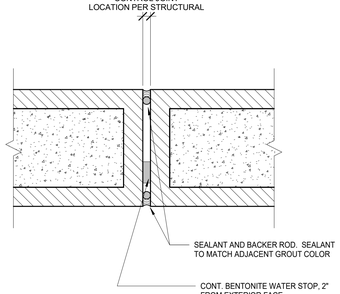

NOTE: CONTROL JOINTS EXCEEDING .625 INCH WILL REQUIRE A FIRE RESISTANT JOINT SYSTEM PER CBC 715.1 EXC. 9

CMU VERTICAL CONTROL JOINT | 3" = 1'-0" | 12

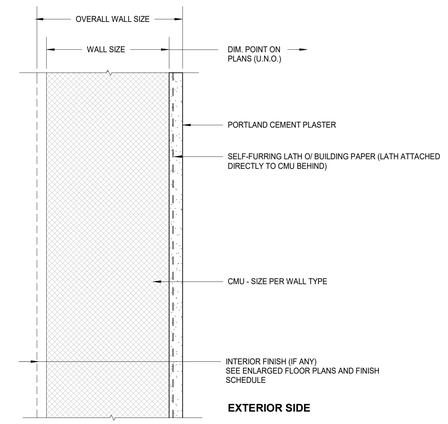

FIRE RESISTANCE RATING FOR CMU WALLS PER CBC T721.1(2)

	MIN. FINISHED THICKNESS 2 HOUR	1 HOUR
ASSEMBLY 3-1.1 EXPANDED SLAG OR PUMICE	3.2"	2.1"

ALL CMU WALLS ARE 8" MIN NOMINAL THICKNESS, FULLY GROUTED.
PER FOOTNOTE f THESE WALLS HAVE A 4 HOUR RATING

EXT. CMU PLASTER WALL (CM1) | 3" = 1'-0" | 9

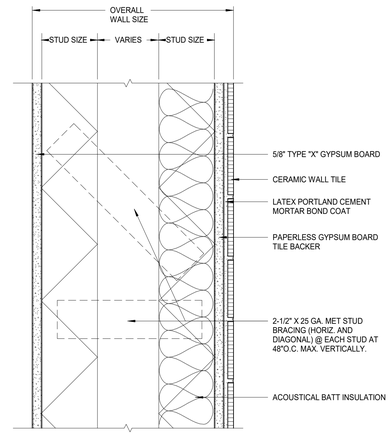

PLUMBING WALL (M4) | 3" = 1'-0" | 6

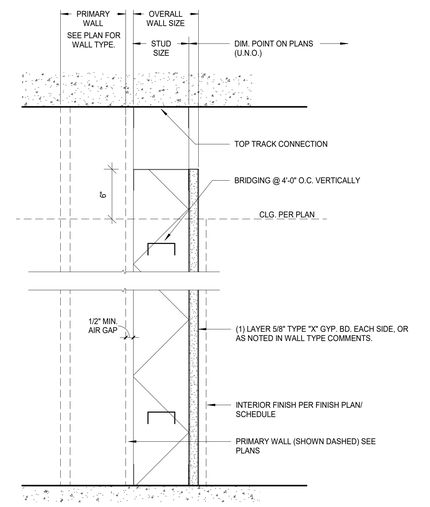

FURRING WALL (M3) | 3" = 1'-0" | 3

M1 EXTERIOR METAL STUD

WALL TYPE	STUD SIZE	STUD SPACING	OVERALL WALL THK	DETAIL	COMMENTS
M1.6	6"	16" O.C.	8 1/4"	1 / -	STUCCO
M1.6A	6"	16" O.C.	8 1/4"	4 / -	TILE

M2 INTERIOR METAL STUD

WALL TYPE	STUD SIZE	STUD SPACING	OVERALL WALL THK	DETAIL	COMMENTS
M2.4A	3 5/8"	16" O.C.	4 7/8"	2 / -	TILE
M2.6	6"	16" O.C.	7 1/4"	2 / -	
M2.6A	6"	16" O.C.	7 1/4"	2 / -	TILE
M2.6B	6"	16" O.C.	7 1/4"	2 / -	TILE BOTH SIDES

M3 FURRING WALL

WALL TYPE	STUD SIZE	STUD SPACING	OVERALL WALL THK	DETAIL	COMMENTS
M3.1A	1 1/2"	16" O.C.	2 1/2"	3 / -	TILE
M3.2	2 1/2"	16" O.C.	3"	3 / -	
M3.4	3 5/8"	16" O.C.	4 1/8"	3 / -	
M3.4A	3 5/8"	16" O.C.	4 3/4"	3 / -	TILE
M3.6	6"	16" O.C.	6 1/2"	3 / -	
M3.6A	6"	16" O.C.	7"	3 / -	TILE

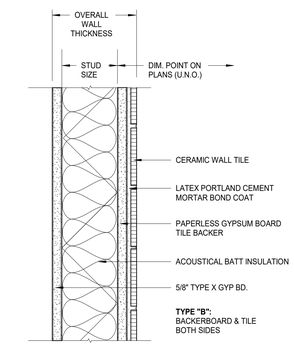

NOTE: CONTROL JOINTS EXCEEDING .625 INCH WILL REQUIRE A FIRE RESISTANT JOINT SYSTEM PER CBC 715.1 EXC. 9

CMU CORNER CONTROL JOINT | 3" = 1'-0" | 11

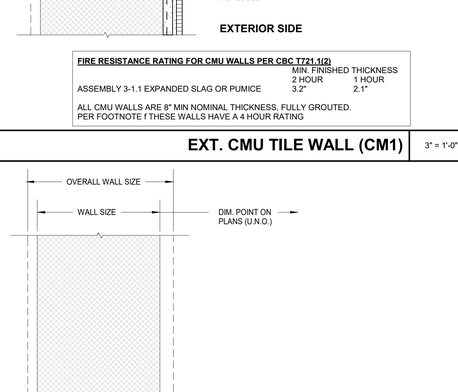

FIRE RESISTANCE RATING FOR CMU WALLS PER CBC T721.1(2)

	MIN. FINISHED THICKNESS 2 HOUR	1 HOUR
ASSEMBLY 3-1.1 EXPANDED SLAG OR PUMICE	3.2"	2.1"

ALL CMU WALLS ARE 8" MIN NOMINAL THICKNESS, FULLY GROUTED.
PER FOOTNOTE f THESE WALLS HAVE A 4 HOUR RATING

EXT. CMU TILE WALL (CM1) | 3" = 1'-0" | 8

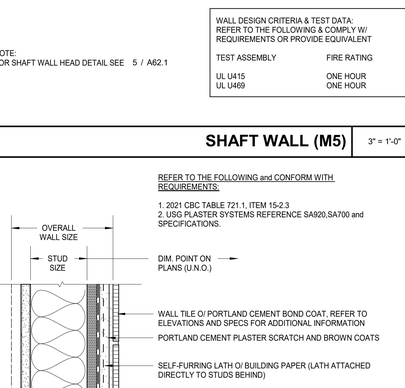

NOTE:
FOR SHAFT WALL HEAD DETAIL SEE 5 / A62.1

WALL DESIGN CRITERIA & TEST DATA:
REFER TO THE FOLLOWING & COMPLY W/ REQUIREMENTS OR PROVIDE EQUIVALENT

TEST ASSEMBLY	FIRE RATING
UL U415	ONE HOUR
UL U469	ONE HOUR

SHAFT WALL (M5) | 3" = 1'-0" | 5

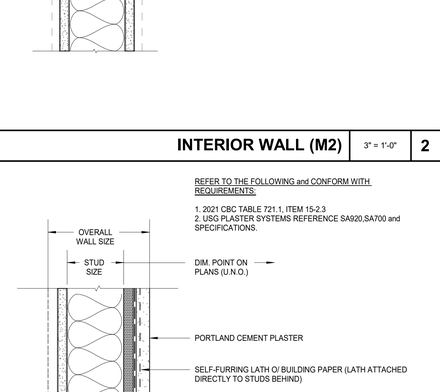

INTERIOR WALL (M2) | 3" = 1'-0" | 2

M4 PLUMBING WALL

WALL TYPE	STUD SIZE	STUD SPACING	OVERALL WALL THK	DETAIL	COMMENTS
M4.4B	3 5/8"	16" O.C.	1' - 7"	6 / -	TILE BOTH SIDES

M5 SHAFT WALL

WALL TYPE	STUD SIZE	STUD SPACING	OVERALL WALL THK	DETAIL	COMMENTS
M5.6	6" CH	24" O.C.	6 5/8"	5 / -	

CM1 EXTERIOR WALL - CMU

WALL TYPE	STUD SIZE	STUD SPACING	OVERALL WALL THK	DETAIL	COMMENTS
CM1.8	-	-	8"	7 / -	
CM1.8A	-	-	9 1/8"	8 / -	TILE
CM1.8C	-	-	8 7/8"	9 / -	STUCCO
CM1.10A	-	-	11 1/8"	8 / -	TILE
CM1.10C	-	-	10 7/8"	9 / -	STUCCO

CM2 INTERIOR WALL - CMU

WALL TYPE	STUD SIZE	STUD SPACING	OVERALL WALL THK	DETAIL	COMMENTS
CM2.8	-	-	8"	7 / -	

WALL TYPE SCHEDULE

TILE WALL | 3" = 1'-0" | 10

FIRE RESISTANCE RATING FOR CMU WALLS PER CBC T721.1(2)

	MIN. FINISHED THICKNESS 2 HOUR	1 HOUR
ASSEMBLY 3-1.1 EXPANDED SLAG OR PUMICE	3.2"	2.1"

ALL CMU WALLS ARE 8" MIN NOMINAL THICKNESS, FULLY GROUTED.
PER FOOTNOTE f THESE WALLS HAVE A 4 HOUR RATING

CMU WALL (CM) | 3" = 1'-0" | 7

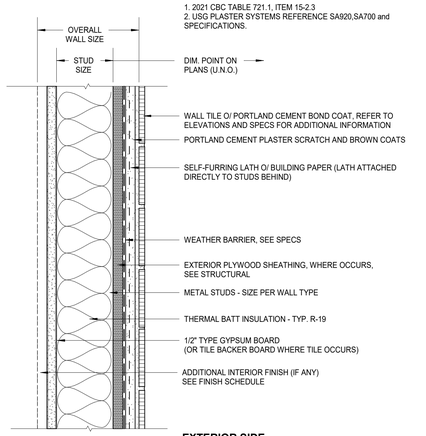

EXT. TILE WALL (M1) | 3" = 1'-0" | 4

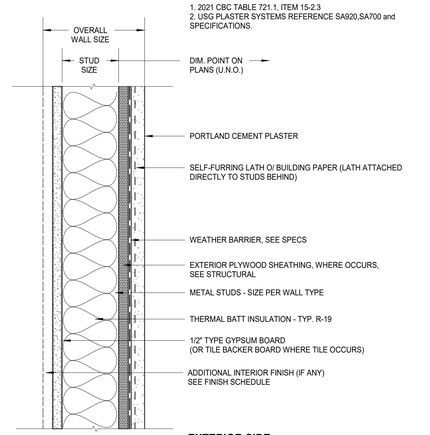

EXT. PLASTER WALL (M1) | 3" = 1'-0" | 1

WALL TYPE GENERAL NOTES

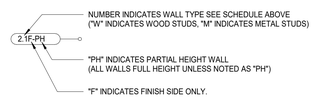

WALL TYPE SYMBOL LEGEND

PREPARED BY:
SVA ARCHITECTS
6 HUTTON CENTRE DR, SUITE 1150
SANTA ANA, CA 92707
T 949.809.3380 WWW.SVA-ARCHITECTS.COM

THIS DOCUMENT CONTAINS INFORMATION PROPRIETARY TO SVA ARCHITECTS INC. AND IS FURNISHED IN CONFIDENCE FOR THE LIMITED PURPOSE OF EVALUATION, BIDDING OR REVIEW. THIS DOCUMENT OR ITS CONTENTS MAY NOT BE USED FOR ANY OTHER PURPOSE AND MAY NOT BE REPRODUCED OR DISCLOSED TO OTHERS WITHOUT THE PRIOR WRITTEN CONSENT OF SVA ARCHITECTS INC. ALL RIGHTS RESERVED. © COPYRIGHT 2016.

LICENSED ARCHITECT ROBERT M. SIMPSON No. C-18001 JAN. 31, 2025 STATE OF CALIFORNIA

REVISIONS

NO.	DESCRIPTION	DATE	APPROVED
1	90% CD SUBMITTAL	12/15/2022	
2	100% CD SUBMITTAL	05/01/2023	
3	FINAL SUBMITTAL	06/30/2023	

B.M.: THE CITY OF GARDENA BENCHMARK NO. SD-15
ELEV. = 43.508'

CITY OF GARDENA
DEPARTMENT OF PUBLIC WORKS - ENGINEERING

WALL TYPES

COMMUNITY AQUATICS & SENIOR CENTER

A61.1

	INITIAL	DATE
DESIGNED BY	AP/EC	05/25/2022
DRAWN BY	NC	06/20/23
CHECKED BY	DB	06/29/23

APPROVED BY:
APPROVED BY: DIRECTOR OF PUBLIC WORKS
SHT. 71 OF 195 DWG. NO. 5-2606

CARDENA COMMUNITY AQUATICS AND SENIOR CENTER - CITY SUBMITTAL SET

Plot Date: 6/30/2023 8:00:00 AM
File Path: G:\Projects\Active Projects\Gardena, Community Pool and Senior Center_design\Wall Types.dwg

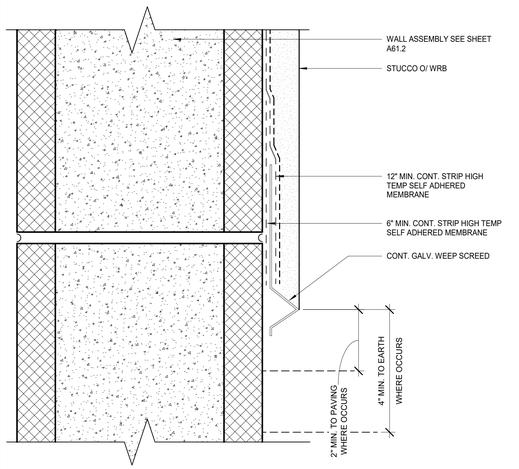

EXTERIOR TYP. SCREED | 6" = 1'-0" | 17

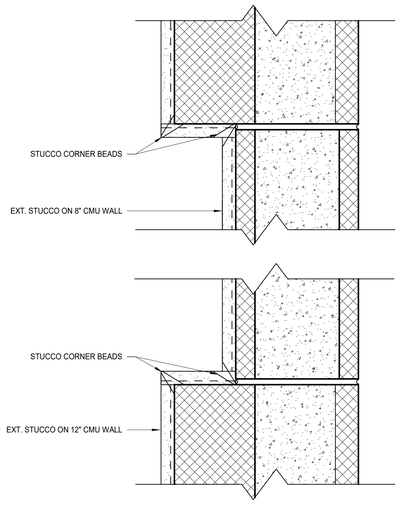

STUCCO RETURNS AT OFFSET CMU | 3" = 1'-0" | 14

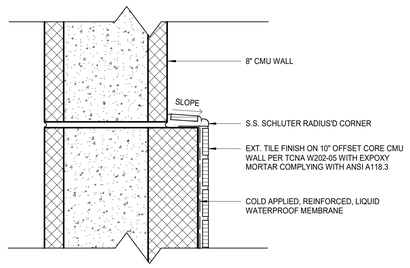

TILE CAP AT OFFSET CMU | 3" = 1'-0" | 11

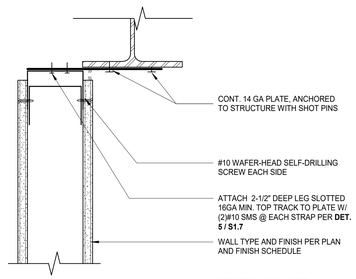

NON-BEARING TOP TRACK TO BEAM | 3" = 1'-0" | 7

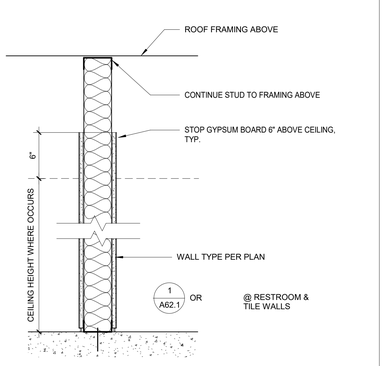

PARTITION FRAMING | 1 1/2" = 1'-0" | 3

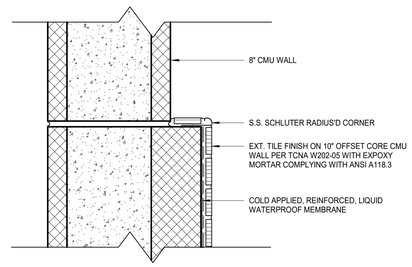

TILE RETURN AT OFFSET CMU | 3" = 1'-0" | 10

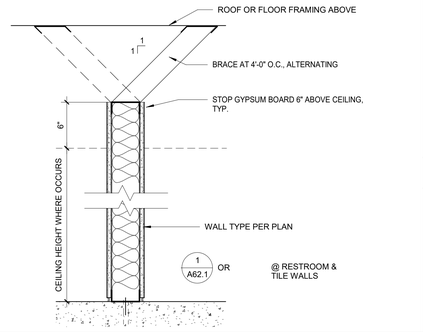

PARTITION FRAMING BRACED | 1 1/2" = 1'-0" | 6

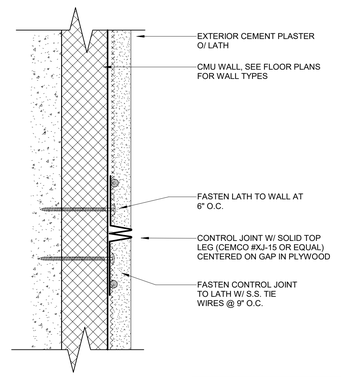

NOTE:
REFER TO EXTERIOR BLDG. ELEVS. FOR ALL JOINT LOCATIONS, TYP.

HORIZONTAL CONTROL JOINT @ CMU | 6" = 1'-0" | 16

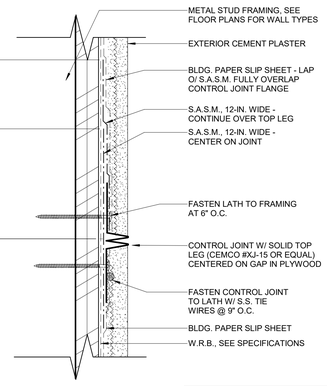

NOTE:
REFER TO EXTERIOR BLDG. ELEVS. FOR ALL JOINT LOCATIONS, TYP.

HORIZONTAL CONTROL JOINT @ METAL STUD | 6" = 1'-0" | 13

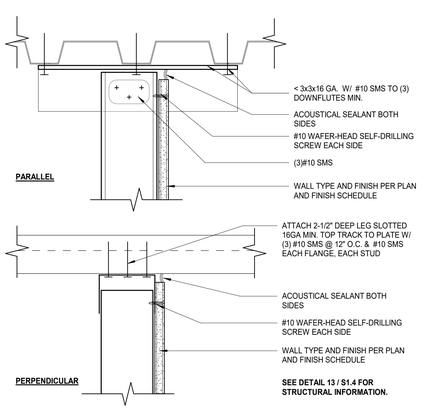

TYP. STUD SOFFIT TO METAL DECK | 3" = 1'-0" | 9

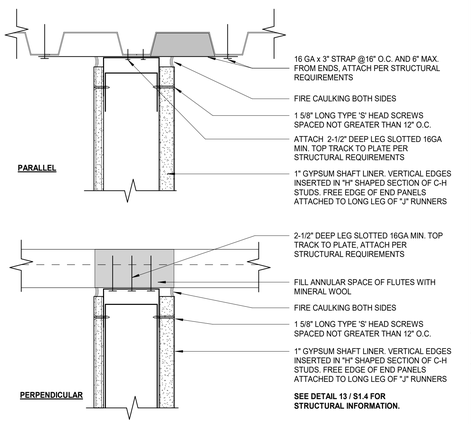

SHAFT AT ROOF DECK | 3" = 1'-0" | 5

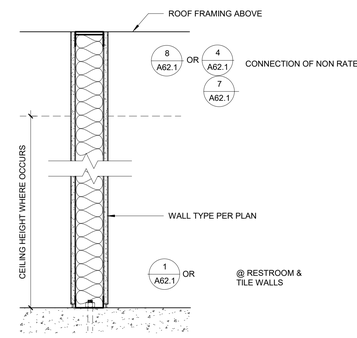

FULL HEIGHT FRAMING | 1 1/2" = 1'-0" | 2

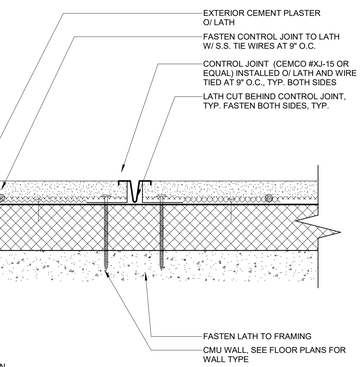

PLAN SECTION

NOTE:
REFER TO EXTERIOR BLDG. ELEVS. FOR ALL JOINT LOCATIONS, TYP.

VERTICAL CONTROL JOINT @ CMU | 6" = 1'-0" | 15

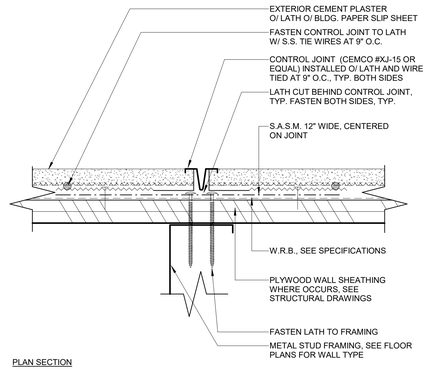

PLAN SECTION

NOTE:
REFER TO EXTERIOR BLDG. ELEVS. FOR ALL JOINT LOCATIONS, TYP.

VERTICAL CONTROL JOINT @ METAL STUD | 6" = 1'-0" | 12

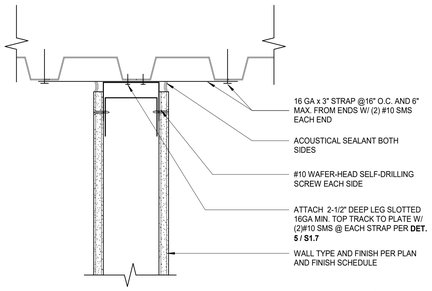

NON-BEARING TOP TRACK (PARALLEL) | 3" = 1'-0" | 8

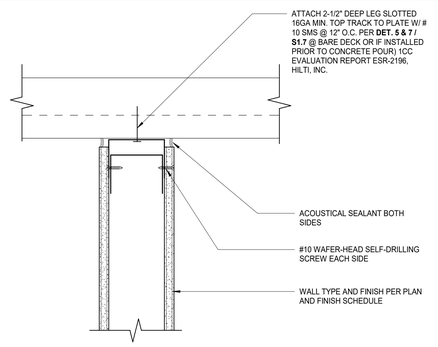

NON-BEARING TOP TRACK (PERP.) | 3" = 1'-0" | 4

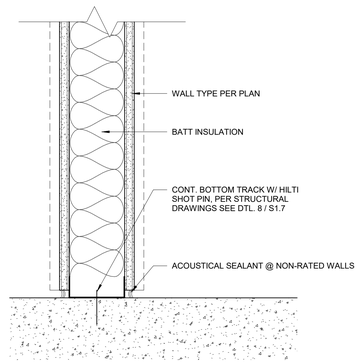

TYP. BOTTOM TRACK CONNECTION | 3" = 1'-0" | 1

CITY OF GARDENA INCORPORATED 1930

PREPARED BY:

SVA ARCHITECTS
6 HUTTON CENTRE DR, SUITE 1150
SANTA ANA, CA 92707
T 949.809.3380 WWW.SVA-ARCHITECTS.COM

THIS DOCUMENT CONTAINS INFORMATION PROPRIETARY TO SVA ARCHITECTS INC. AND IS FURNISHED IN CONFIDENCE FOR THE LIMITED PURPOSE OF EVALUATION, BIDDING OR REVIEW. THIS DOCUMENT OR ITS CONTENTS MAY NOT BE USED FOR ANY OTHER PURPOSE AND MAY NOT BE REPRODUCED OR DISCLOSED TO OTHERS WITHOUT THE PRIOR WRITTEN CONSENT OF SVA ARCHITECTS INC. ALL RIGHTS RESERVED. © COPYRIGHT 2016.

LICENSED ARCHITECT ROBERT M. SIMON No. C-13501 JAN 31, 2025 STATE OF CALIFORNIA

REVISIONS

NO.	DESCRIPTION	DATE	APPROVED
1	90% CD SUBMITTAL	12/15/2022	
2	100% CD SUBMITTAL	05/01/2023	
3	FINAL SUBMITTAL	06/30/2023	

B.M.: THE CITY OF GARDENA BENCHMARK NO. SD-15 ELEV. = 43.526'

CITY OF GARDENA
DEPARTMENT OF PUBLIC WORKS - ENGINEERING

DETAILS WALL ASSEMBLIES

COMMUNITY AQUATICS & SENIOR CENTER

A62.1

	INITIAL	DATE
DESIGNED BY	AP/EC	05/25/2022
DRAWN BY	NC	06/20/23
CHECKED BY	DB	06/29/23

APPROVED BY:

APPROVED BY: DIRECTOR OF PUBLIC WORKS

SHT. 72 OF 195 DWG. NO. S-2606

CARDENA COMMUNITY AQUATICS AND SENIOR CENTER - CITY SUBMITTAL SET

Plotted: 6/30/2023 8:01:37 AM By: Nicholas Cardenas, Community Pool and Senior Center - dbsv-ed04vs-svr.hbc.ic.com.vn
P:\SVA Projects\2021\21-0001 Gardena Community Pool and Senior Center\Drawings\Construction Documents\Gardena_Community Pool and Senior Center_dbsv-ed04vs-svr.hbc.ic.com.vn

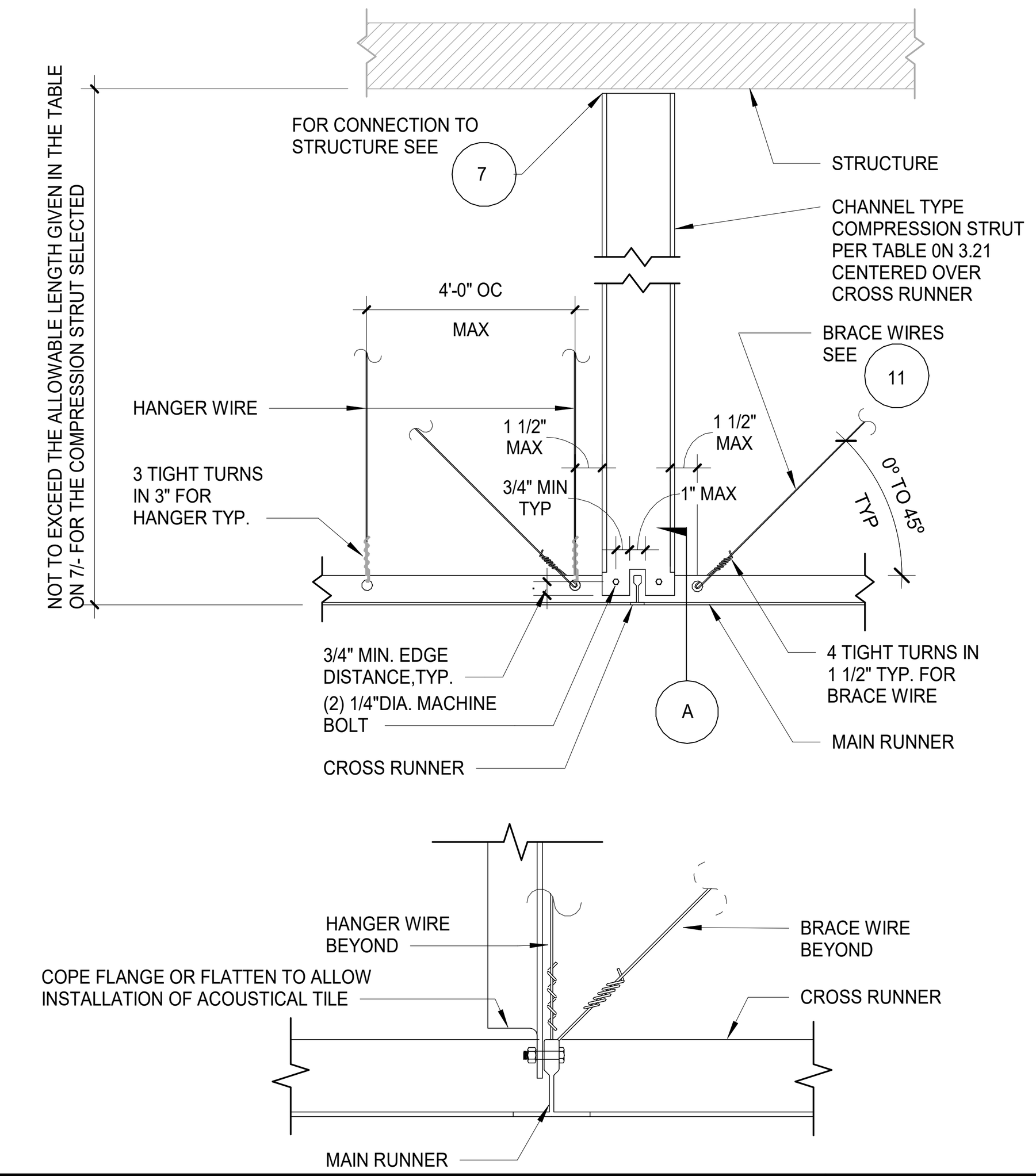

CHANNEL TYPE STRUT
1 1/2" = 1'-0" | 15

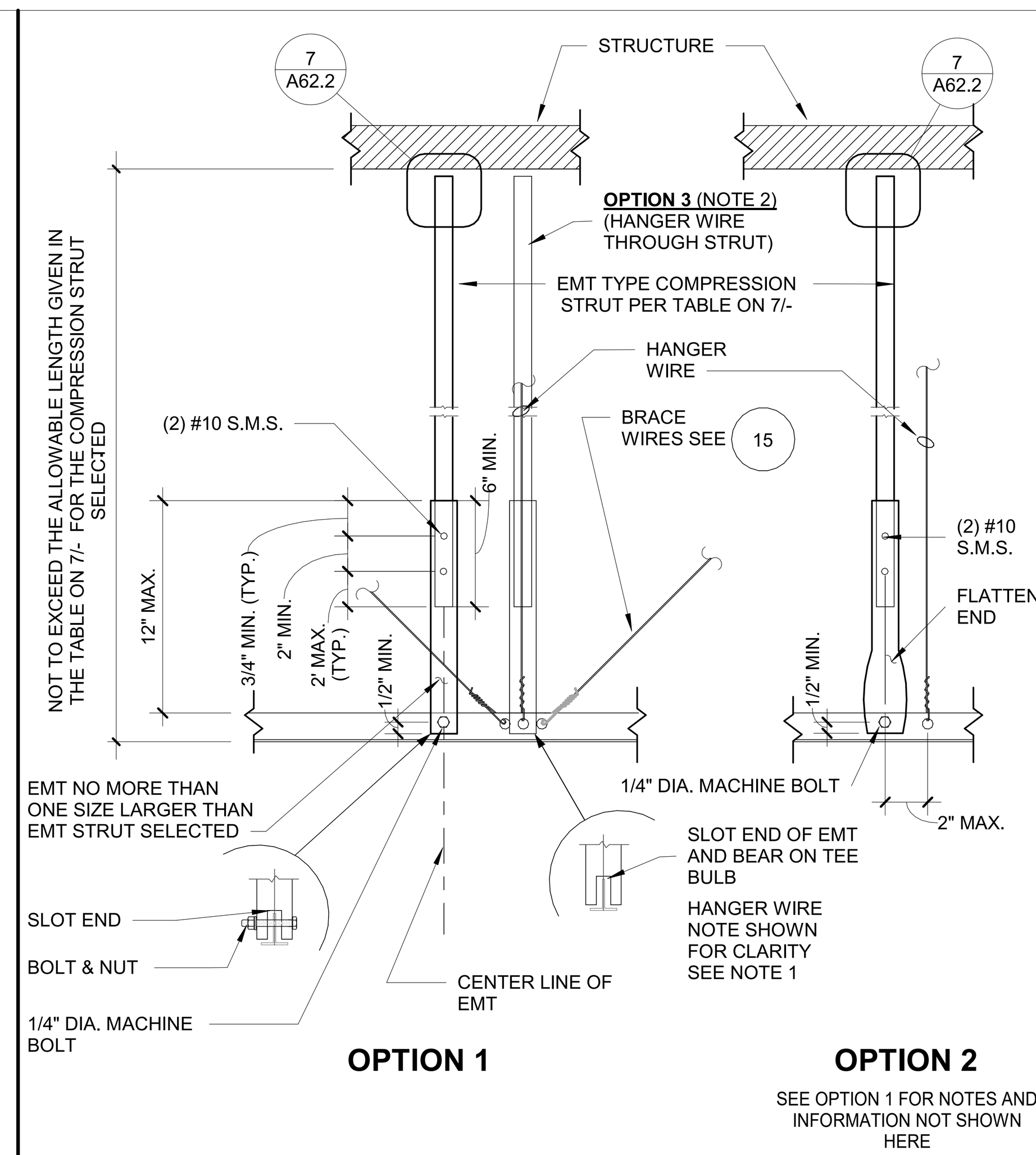

COMPRESSION STRUT DET. @ ACT
1 1/2" = 1'-0" | 12

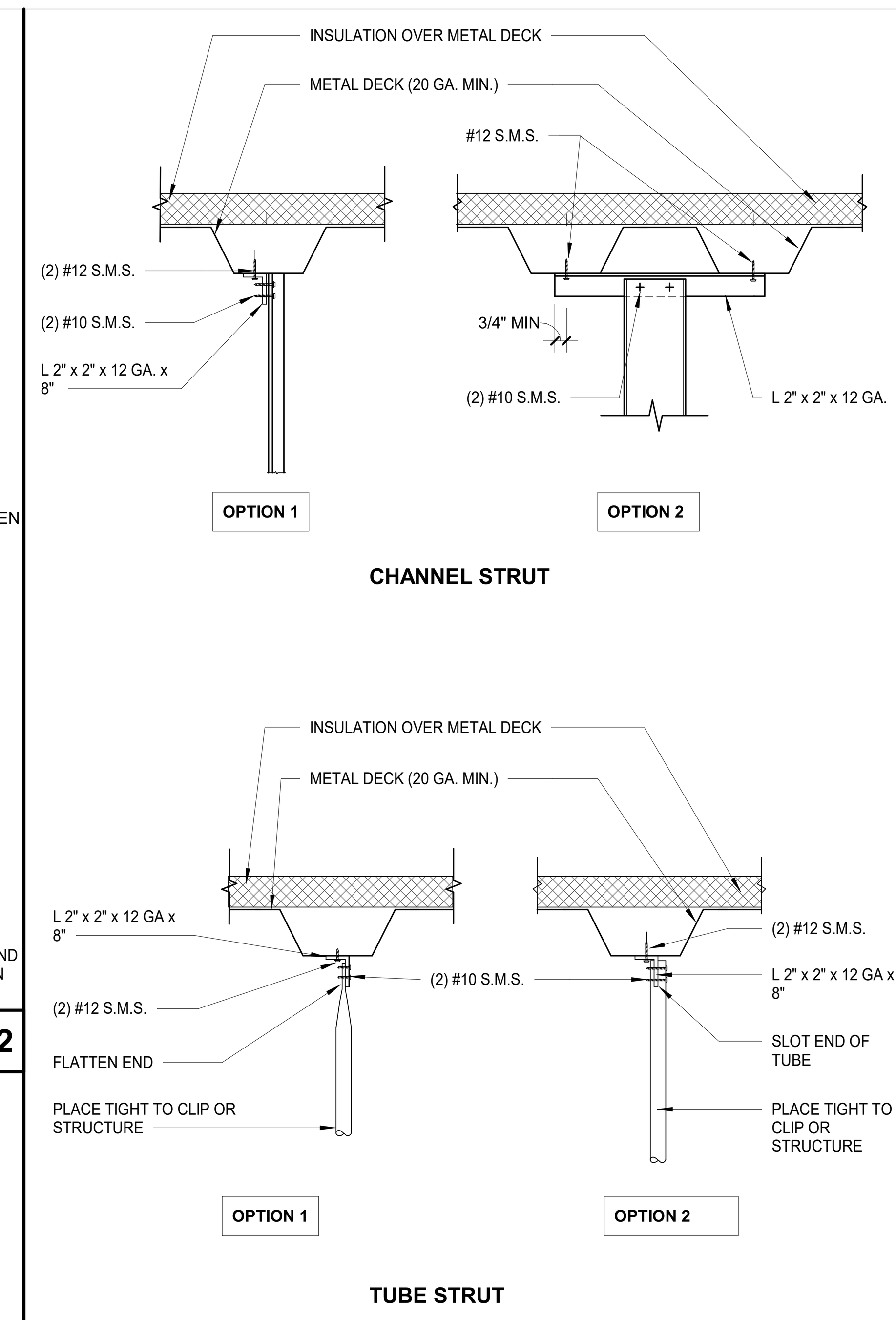

EMT COMPRESSION STRUT	MAXIMUM LENGTH
1" DIAMETER EMT (0.057" WALL THICKNESS)	9'-9"
1 1/2" DIAMETER EMT (0.065" WALL THICKNESS)	14'-9"
CHANNEL COMPRESSION STRUT	**MAXIMUM LENGTH**
250137-43	8'-10"

COMPRESSION STRUT DET. @ ACT
1 1/2" = 1'-0" | 7

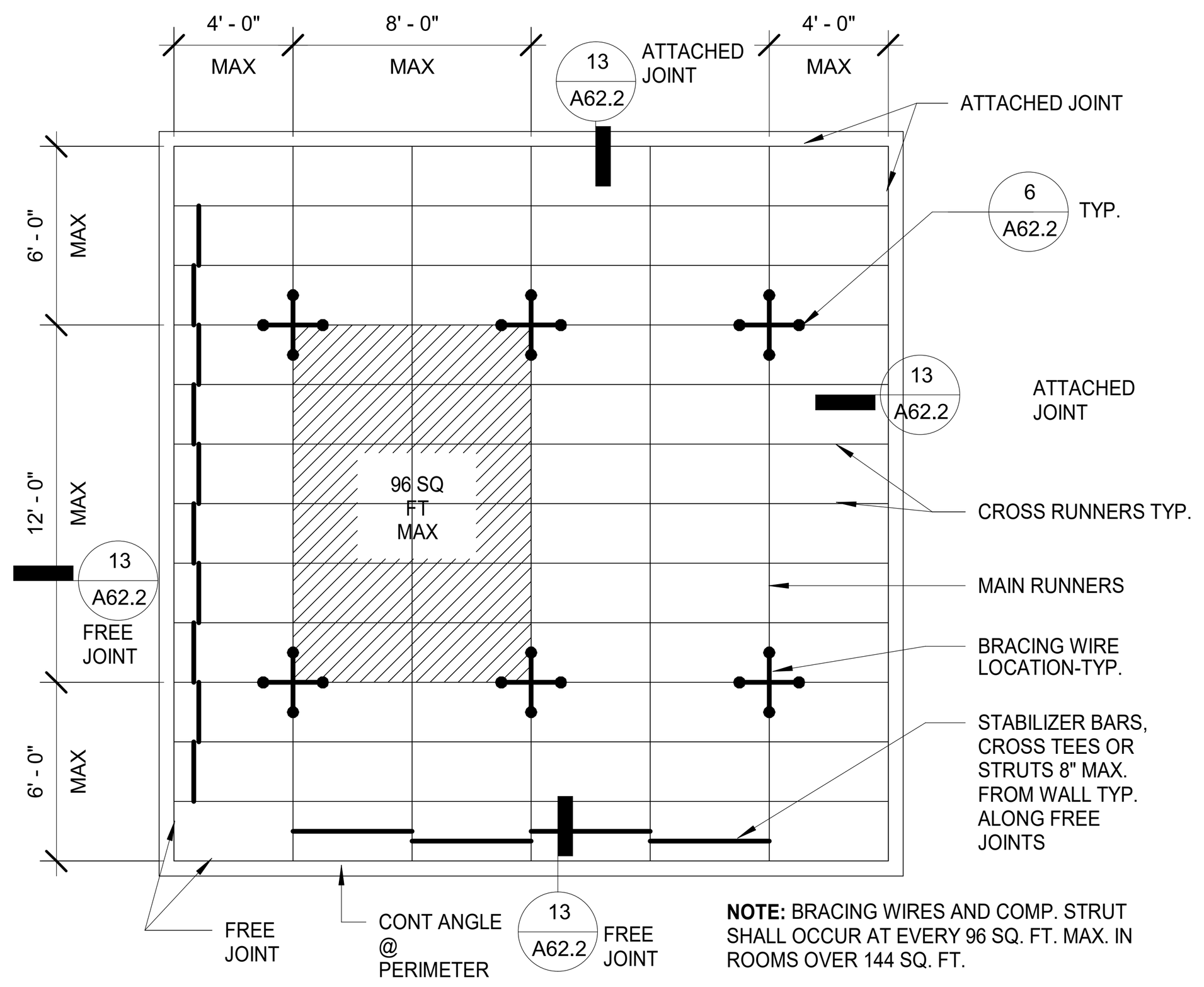

NOTE: BRACING WIRES AND COMP. STRUT SHALL OCCUR AT EVERY 96 SQ. FT. MAX. IN ROOMS OVER 144 SQ. FT.

CEILING PLAN DETAIL, TYP.
3/16" = 1'-0" | 4

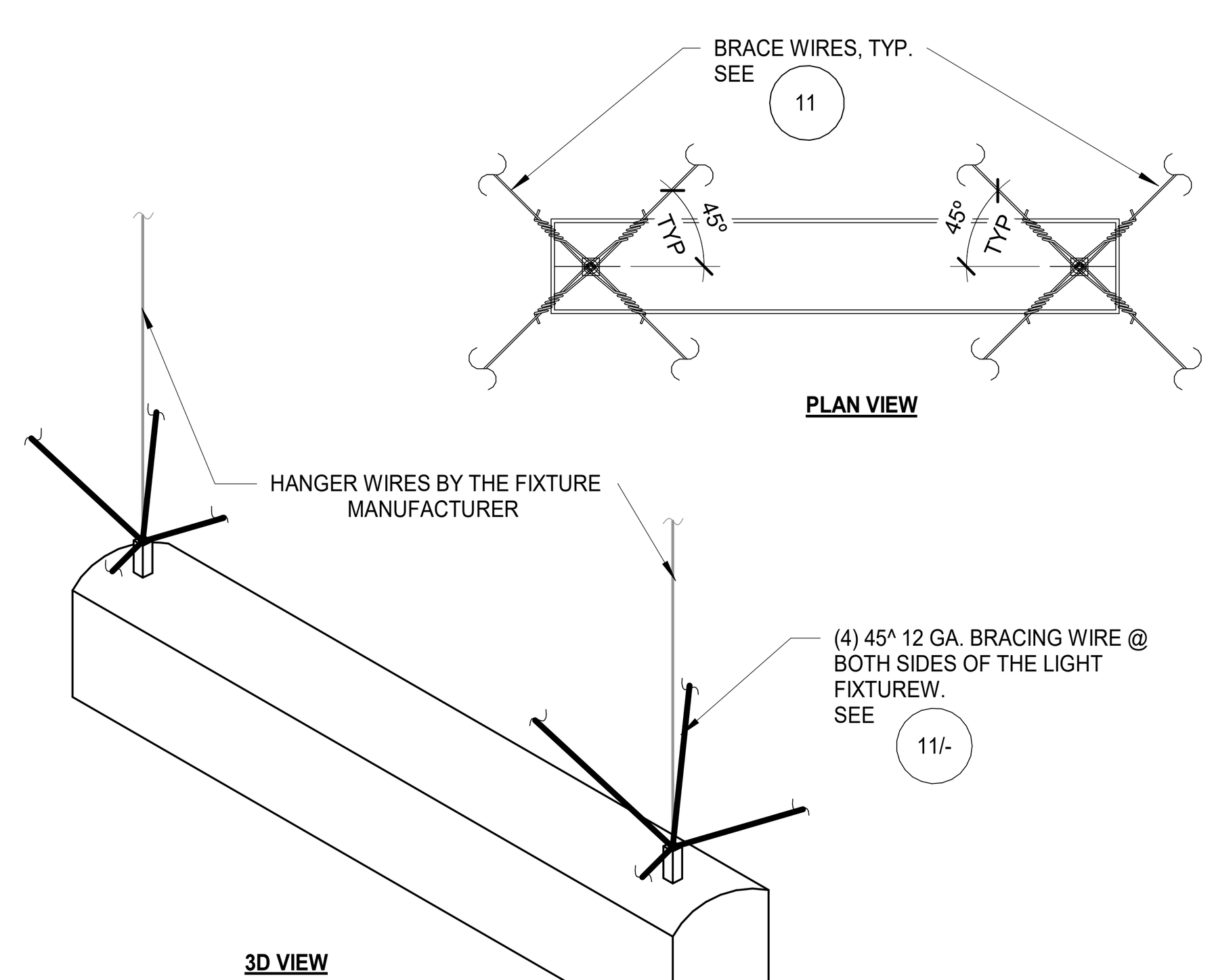

PENDANT LIGHT FIXTURE BRACING DETAIL
3" = 1'-0" | 18

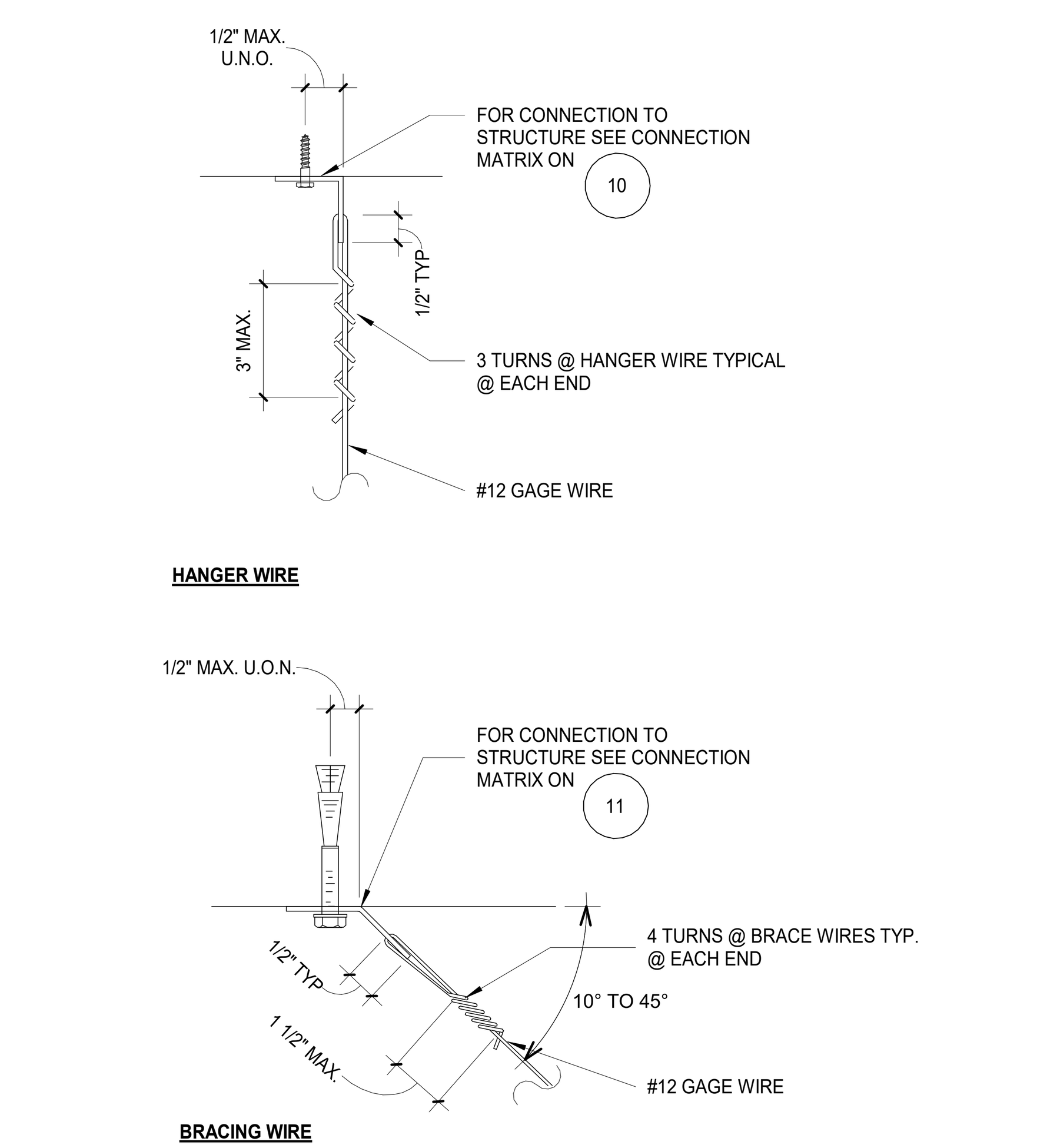

HANGER & BRACING WIRE CONNECTION
3" = 1'-0" | 14

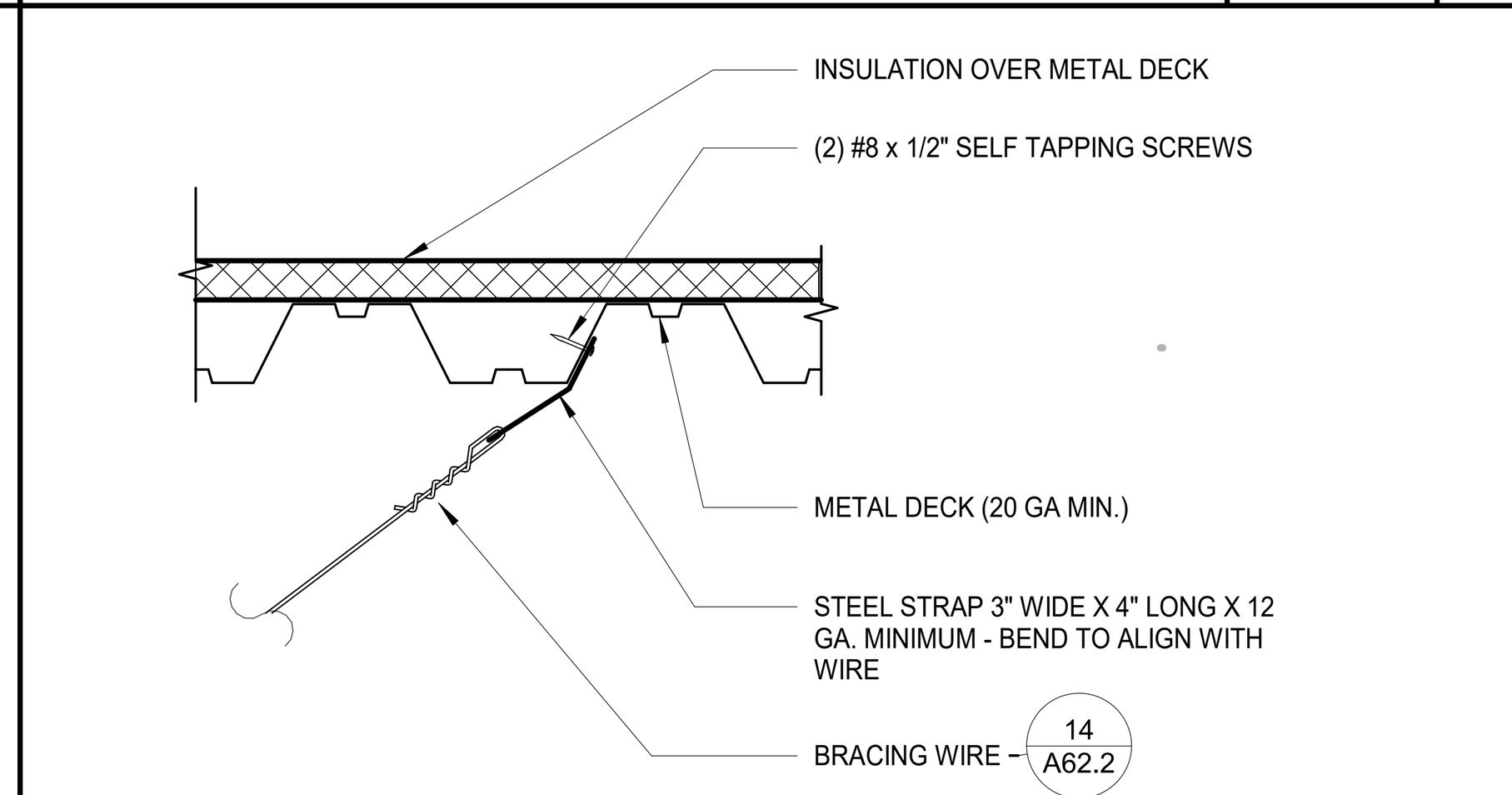

BRACING WIRE AT METAL DECK
1 1/2" = 1'-0" | 11

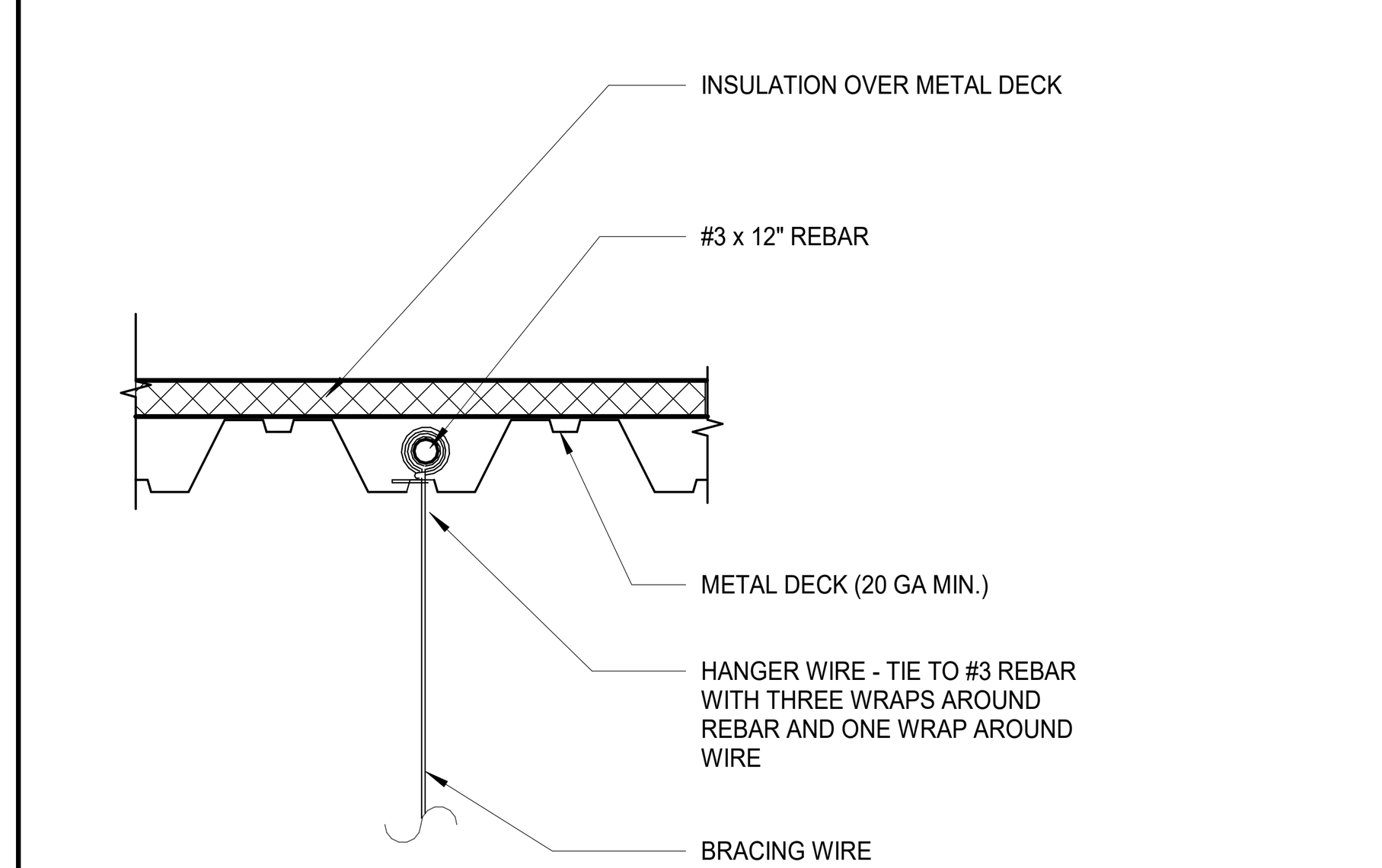

HANGER WIRE AT METAL DECK
1 1/2" = 1'-0" | 10

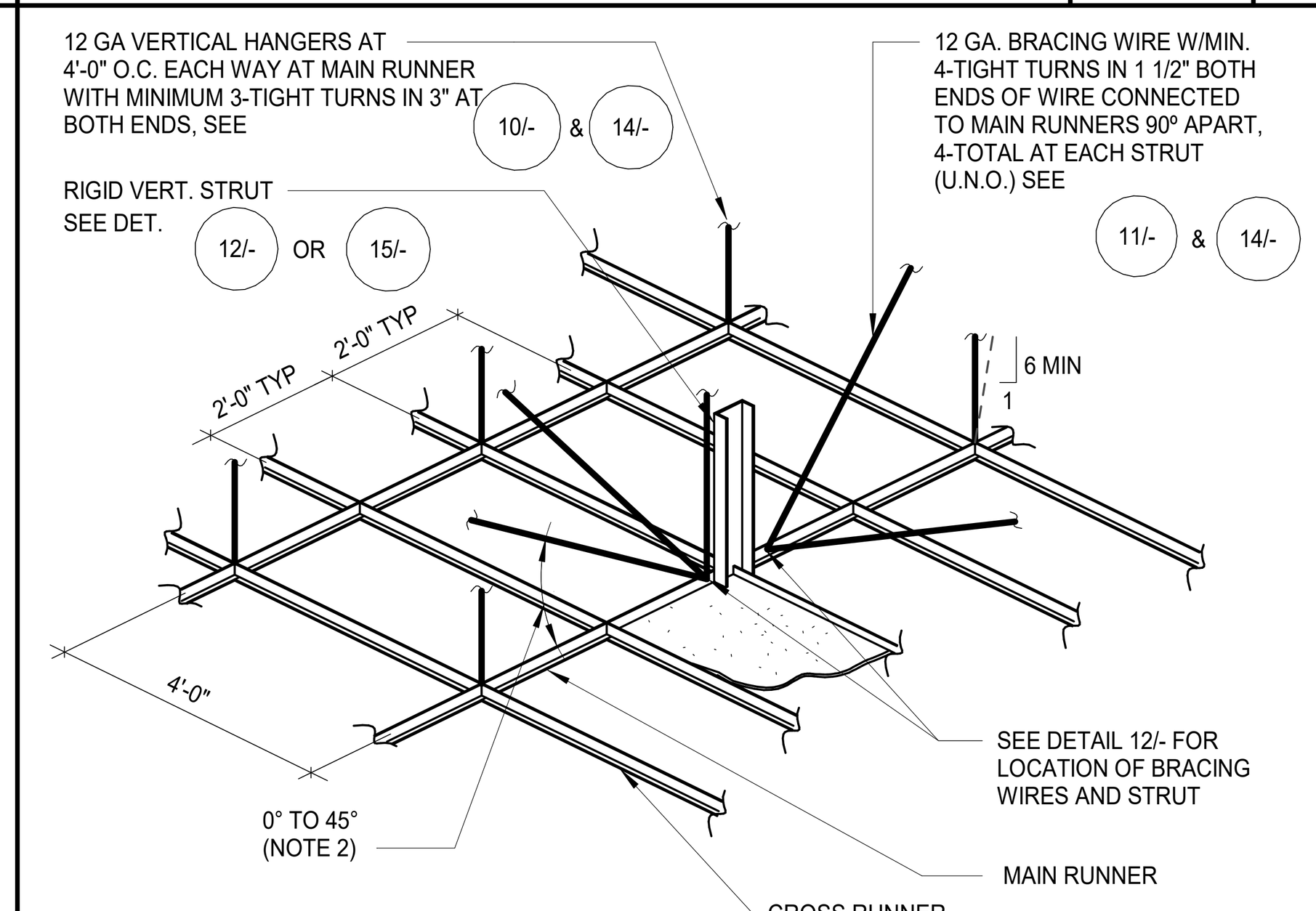

NOTES:

1. STRUTS SHALL NOT REPLACE HANGER WIRES.
2. THE MINIMUM ACCEPTABLE ANGLE IS DETERMINED SUCH THAT THE WIRES DO NOT INTERFERE WITH THE RUNNERS, LIGHT FIXTURES, ETC. AND REMAIN STRAIGHT AND UNOBSTRUCTED.

SUSPENSION AND BRACING ASSEMBLY
3" = 1'-0" | 6

NOTE :

1. TYP VERTICAL SUSPENSION WIRE: 12 GA GALV SOFT ANNEALED MILD STEEL INSTALL WIRES NO MORE THAN 1 ON 6 OUT OF PLUMB.
2. CEILING BOARD NOT SHOWN FOR CLARITY
3. ARMSTRONG BERC2 SEISMIC CLIP (ESR-1308) OR EQUAL, TYP, INSTALL PER MFR

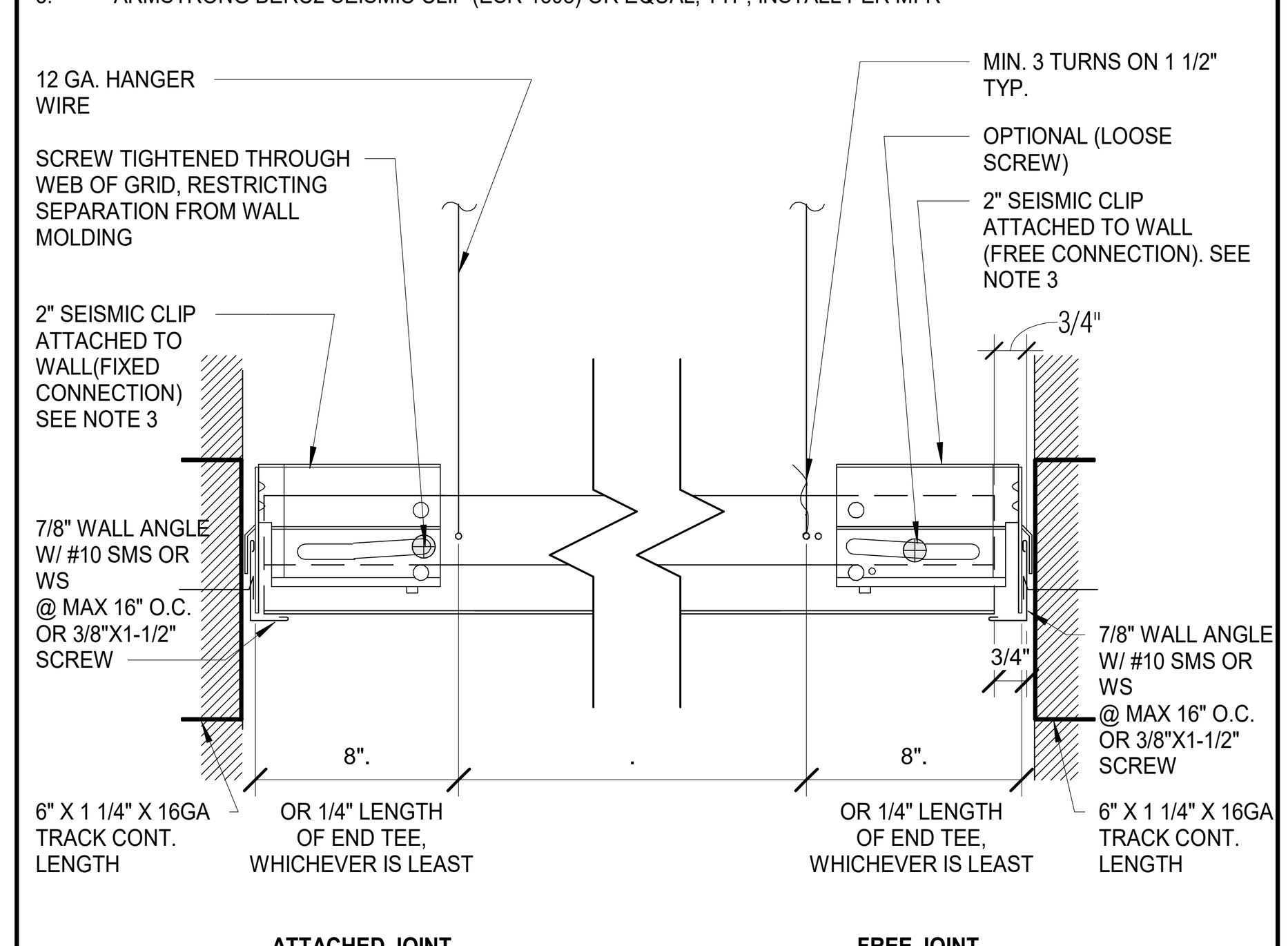

PERIMETER SEISMIC CLIP
3" = 1'-0" | 13

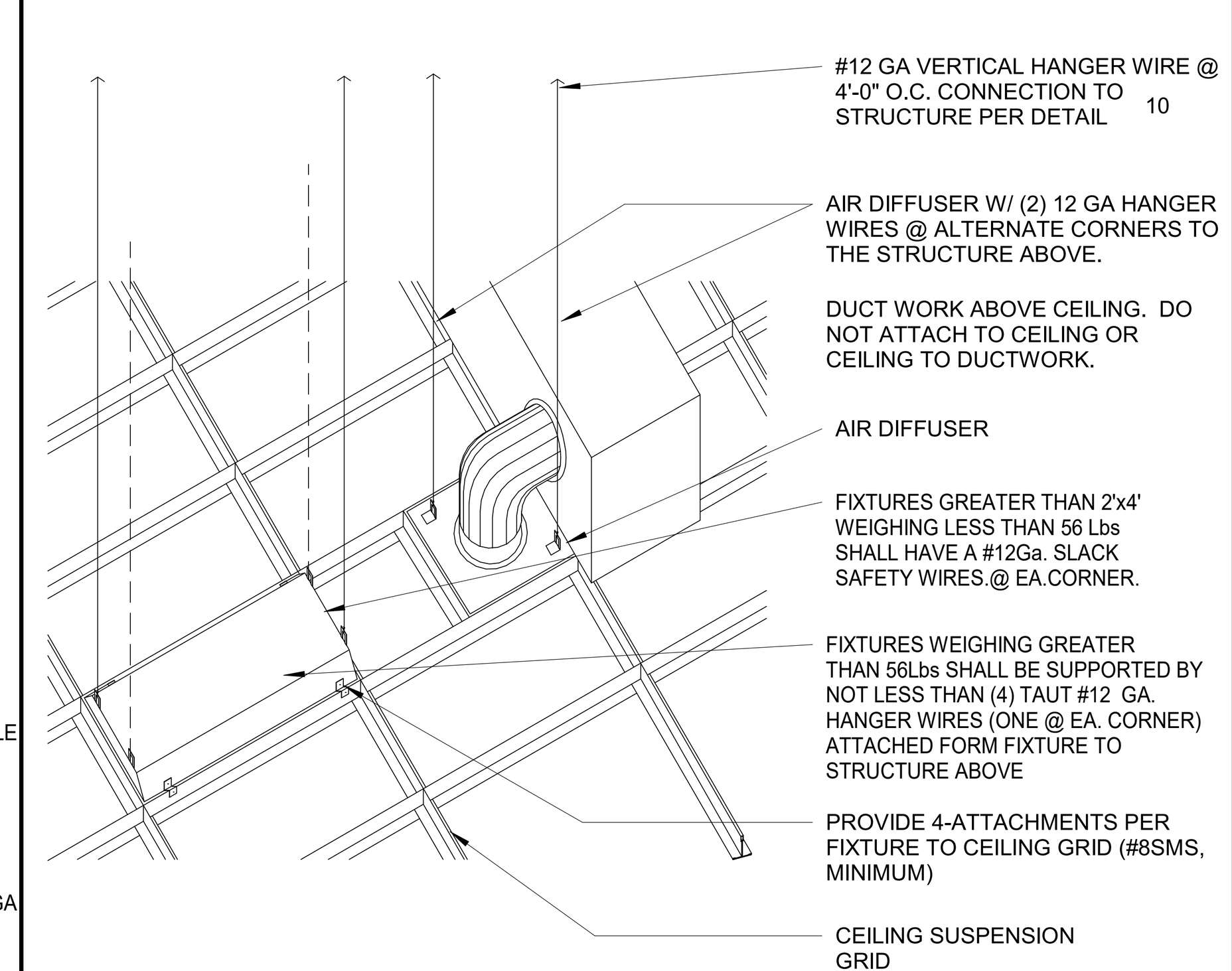

CEILING FIXTURE BRACING DETAIL
1 1/2" = 1'-0" | 9

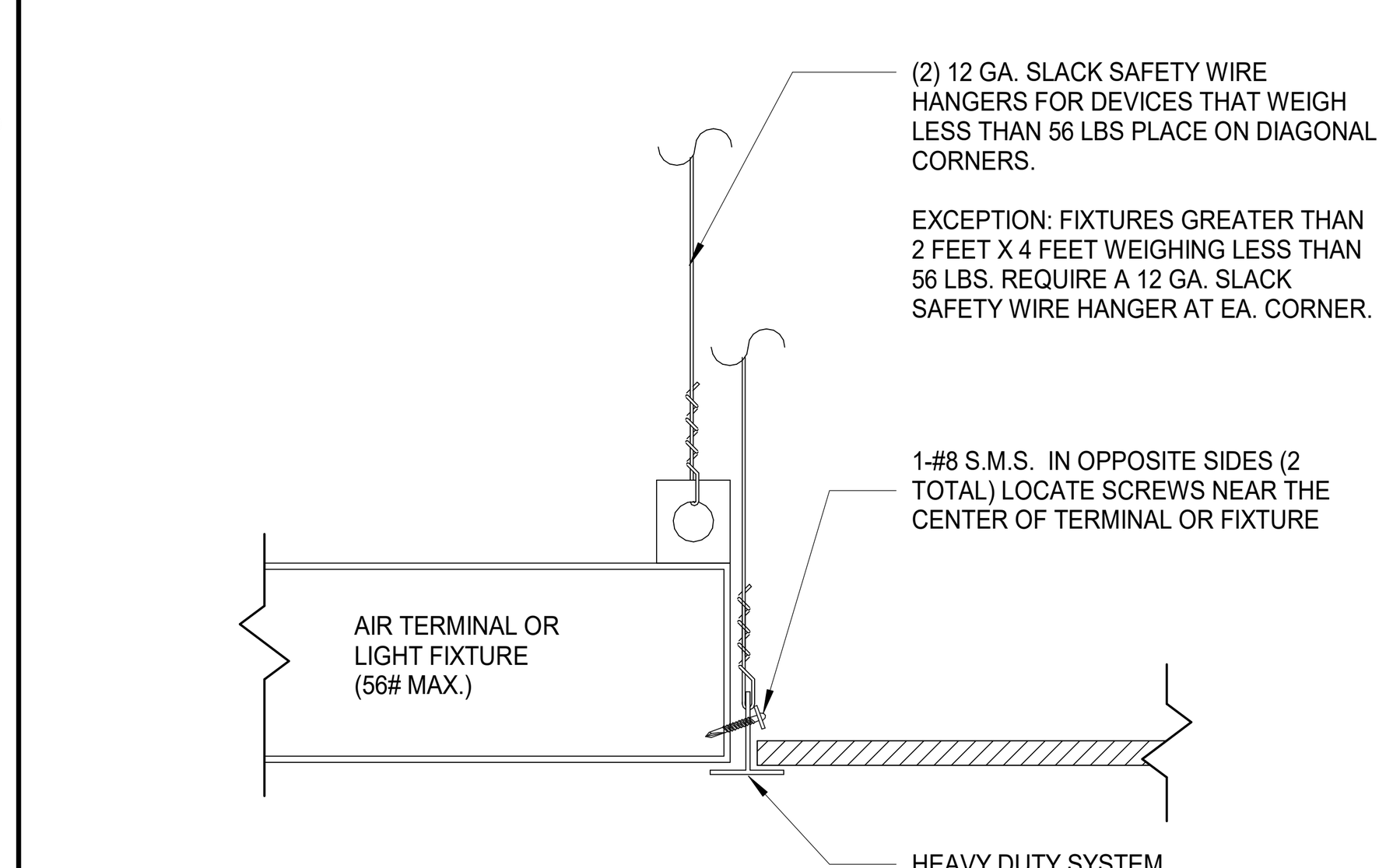

LIGHT FIX./AIR TERMINAL SUPPORT DETAIL
3" = 1'-0" | 5

SUSPENDED LAY-IN CEILING NOTES:
(FOR CEILING SYSTEMS WHOSE TOTAL WEIGHT, INCLUDING AIR CONDITIONING/HEATING GRILLS AND LIGHT FIXTURES, DOES NOT EXCEED 4 PSF)

1- CEILING SYSTEM GENERAL NOTES:

1.01- CEILING SYSTEM COMPONENTS SHALL COMPLY WITH ASTM C635-07 AND SECTION 5.1 OF ASTM E580-10A.
1.02- THE CEILING GRID SYSTEM MUST BE RATED HEAVY DUTY AS DEFINED BY ASTM C635-08.
1.03- CEILING SYSTEMS. THE FOLLOWING CEILING SYSTEM(S) IS/ARE PART OF THE SCOPE OF THIS PROJECT:
MANUFACTURER'S NAME: ARMSTRONG WORLD INDUSTRIES
PRODUCT EVALUATION REPORT TYPE AND NUMBER: ESR1308
MANUFACTURER'S MODEL NUMBER - MAIN RUNNER: 7501
MANUFACTURER'S CATALOG NUMBER - CROSS RUNNER: XL7549 & XL7528
1.04- SEISMIC WALL CLIP:
MANUFACTURER'S MODEL: BERC2 WITH 7800 MOLDING
1.05- CEILING PANELS SHALL NOT SUPPORT ANY LIGHT FIXTURES, AIR TERMINALS OR DEVICES.
1.06- FOR CEILING INSTALLATIONS UTILIZING ACOUSTICAL TILE PANELS OF MINERAL OR GLASS FIBER, IT IS NOT MANDATORY TO PROVIDE ¾" CLEARANCE BETWEEN THE ACOUSTICAL TILE PANELS AND THE WALL ON THE SIDES OF THE CEILING WHICH ARE FREE TO SLIP. FOR ALL OTHER CEILING PANEL TYPES, PROVIDE ¾" CLEARANCE BETWEEN THE CEILING PANEL AND THE WALL ON THE SIDES OF THE CEILING FREE TO SLIP.

2- MATERIALS:

2.01- CEILING WIRE SHALL BE CLASS 1 ZINC COATED (GALVANIZED) CARBON STEEL CONFORMING TO ASTM A641-09A. WIRE SHALL BE #12 GAGE (0.106" DIAMETER) WITH SOFT TEMPER AND MINIMUM TENSILE STRENGTH = 70 KSI.
2.02- GALVANIZED SHEET STEEL (INCLUDING THAT USED FOR METAL STUD AND TRACK COMPRESSION STRUTS/POST) SHALL CONFORM TO ASTM A653-11, OR OTHER EQUIVALENT SHEET STEEL LISTED IN SECTION A2.1 OF THE NORTH AMERICAN SPECIFICATION FOR THE DESIGN OF COLD-FORMED STEEL STRUCTURAL MEMBERS 2007, INCLUDING SUPPLEMENT 2 DATED 2010 (AISI S100-07/S2-10). MATERIAL 43 MIL (18 GAGE) AND LIGHTER SHALL HAVE MINIMUM YIELD STRENGTH OF 33 KSI. MATERIAL 54 MIL (16 GAGE) AND HEAVIER SHALL HAVE A MINIMUM YIELD STRENGTH OF 50 KSI.
2.03- ELECTRICAL METALLIC TUBE (EMT) SHALL BE ANSI C80.3/UL 797 CARBON STEEL WITH G90 GALVANIZING. EMT SHALL HAVE MINIMUM YIELD STRENGTH (FY) OF 30 KSI AND MINIMUM ULTIMATE STRENGTH (FU) OF 48 KSI.

3- ATTACHMENT OF HANGER AND BRACING WIRES:

3.01- SEPARATE ALL CEILING HANGER AND BRACING WIRES AT LEAST SIX (6) INCHES FROM ALL UNBRACED DUCTS, PIPES, CONDUIT, ETC.
3.02- HANGER AND BRACING WIRES SHALL NOT ATTACH TO OR BEND AROUND OBSTRUCTIONS INCLUDING BUT NOT LIMITED TO: PIPING, DUCTWORK, CONDUIT AND EQUIPMENT.
3.03- HANGER WIRES THAT ARE MORE THAN ONE (HORIZONTAL) IN SIX (VERTICAL) OUT OF PLUMB SHALL HAVE COUNTER-SLOPING WIRES.
3.04- SLACK SAFETY WIRES SHALL BE CONSIDERED HANGER WIRES FOR INSTALLATION AND TESTING REQUIREMENTS.
3.05- HANGER AND BRACING WIRE ANCHORAGE TO THE STRUCTURE SHALL BE INSTALLED IN SUCH A MANNER THAT THE DIRECTION OF THE ANCHORAGE ALIGNS CLOSELY WITH THE DIRECTION OF THE WIRE. (E.G. BRACING WIRE CEILING CLIPS MUST BE BENT AS SHOWN IN THE DETAILS AND ROTATED AS REQUIRED TO ALIGN CLOSELY WITH THE DIRECTION OF THE WIRE, SCREW EYES IN WOOD MUST BE INSTALLED SO THEY ALIGN CLOSELY WITH THE DIRECTION OF THE WIRE, ETC.)

4- FASTENERS AND WELDING:

4.01- SHEET METAL SCREWS SHALL COMPLY WITH ASTM C1513-10, ASME B18.6.4-89 (R2005). PENETRATION OF SCREWS THROUGH JOINED MATERIAL SHALL NOT BE LESS THAN THREE EXPOSED THREADS.
4.02- EXPANSION ANCHORS SHALL BE:
IN GENERAL, EXPANSION ANCHORS DO NOT OCCUR FOR CEILING CONNECTIONS TO ROOF ABOVE (BUILDING ONLY HAS BARE METAL DECK)
EXPANSION ANCHORS TO CMU WALLS: 3/8" DIAMETER HILTI KB-TZ W/ 2" EMBED INSTALLED PER ICC ESR-3785 AND GENERAL NOTES ON SHEET S0.2.
4.03- POWER-ACTUATED FASTENERS SHALL BE:
SHOT PINS TO WALL: 0.157 HILTI X-U SHOT PIN INSTALLED W/ 1" EMBED PER ICC ESR-2269
4.04- IF NOT OTHERWISE SPECIFIED IN THE EVALUATION REPORT, POWER-ACTUATED FASTENERS INSTALLED IN STEEL SHALL BE INSTALLED SO THE ENTIRE POINTED END OF THE FASTENER IS DRIVEN THROUGH THE STEEL MEMBER.
4.05- POWER-ACTUATED FASTENERS IN CONCRETE ARE NOT PERMITTED FOR BRACING WIRES.
4.06- CONCRETE REINFORCEMENT AND PRESTRESSING TENDONS SHALL BE LOCATED BY NON-DESTRUCTIVE MEANS PRIOR TO INSTALLING POST - INSTALLED ANCHOR.
4.07- WELDING SHALL BE IN ACCORDANCE WITH AWS D1.3 USING E60XX SERIES ELECTRODES.

5- TESTING: ALL FIELD TESTING MUST BE PERFORMED IN THE PRESENCE OF THE PROJECT INSPECTOR.

5.01- POST-INSTALLED ANCHORS IN CONCRETE USED TO SUPPORT HANGER WIRES SHALL BE TESTED AT A FREQUENCY OF 10 PERCENT. POWER ACTUATED FASTENERS IN CONCRETE SHALL BE FIELD TESTED FOR 200 LBS. IN TENSION. ALL OTHER POST-INSTALLED ANCHORS IN CONCRETE SHALL BE TESTED IN ACCORDANCE WITH CBC SECTION 1913A.7.
5.02- POST-INSTALLED ANCHORS IN CONCRETE USED TO ATTACH BRACING WIRES SHALL BE TESTED AT A FREQUENCY OF 50 PERCENT IN ACCORDANCE WITH CBC SECTION 1913A.7.

6- LIGHT FIXTURES:

6.01- ALL LIGHT FIXTURES SHALL BE POSITIVELY ATTACHED TO THE CEILING SUSPENSION SYSTEMS BY MECHANICAL MEANS TO RESIST A HORIZONTAL FORCE EQUAL TO THE WEIGHT OF THE FIXTURE. A MINIMUM OF TWO SCREWS OR APPROVED FASTENERS ARE REQUIRED AT EACH LIGHT FIXTURE, PER ASTM E580, SECTION 5.3.1.
6.02- SURFACE-MOUNTED LIGHT FIXTURES SHALL BE ATTACHED TO THE MAIN RUNNER WITH AT LEAST TWO POSITIVE CLAMPING DEVICES. THE CLAMPING DEVICE SHALL COMPLETELY SURROUND THE SUPPORTING CEILING RUNNER AND BE MADE OF STEEL WITH A MINIMUM THICKNESS OF #14 GAGE. ROTATIONAL SPRING CATCHES DO NOT COMPLY. A #12 GAGE SLACK SAFETY WIRE SHALL BE CONNECTED FROM EACH CLAMPING DEVICE TO THE STRUCTURE ABOVE. PROVIDE ADDITIONAL SUPPORTS WHEN LIGHT FIXTURES ARE EIGHT (8) FEET OR LONGER OR EXCEED 56 LB. MAXIMUM SPACING BETWEEN SUPPORTS SHALL NOT EXCEED EIGHT (8) FEET.
60.03- LIGHT FIXTURES WEIGHING LESS THAN OR EQUAL TO 10 LB. SHALL HAVE A MINIMUM OF ONE (1) #12 GAGE SLACK SAFETY WIRE CONNECTED FROM THE FIXTURE HOUSING TO THE STRUCTURE ABOVE.
6.04- LIGHT FIXTURES WEIGHING LESS THAN OR EQUAL TO 10 LB. SHALL HAVE A MINIMUM OF ONE (1) #12 GAGE SLACK SAFETY WIRE CONNECTED FROM THE FIXTURE HOUSING TO THE STRUCTURE ABOVE.
6.05- LIGHT FIXTURES WEIGHING GREATER THAN 10 LB. BUT LESS THAN OR EQUAL TO 56 LBS. MAY BE SUPPORTED DIRECTLY ON THE CEILING RUNNERS, BUT THEY SHALL HAVE A MINIMUM OF TWO (2) #12 GAGE SLACK SAFETY WIRES CONNECTED FROM THE FIXTURE HOUSING AT DIAGONAL CORNERS TO THE STRUCTURE ABOVE.
EXCEPTION: ALL LIGHT FIXTURES GREATER THAN TWO BY FOUR FEET WEIGHING LESS THAN 56 LBS. SHALL HAVE A #12 GAGE SLACK SAFETY WIRE AT EACH CORNER.
6.06- ALL LIGHT FIXTURES WEIGHING GREATER THAN 56 LB. SHALL BE INDEPENDENTLY SUPPORTED BY NOT LESS THAN FOUR (4) TAUT #12 GAGE HANGER WIRES (ONE AT EACH CORNER) ATTACHED FROM THE FIXTURE HOUSING TO THE STRUCTURE ABOVE OR OTHER APPROVED HANGERS. THE FOUR (4) TAUT #12 GAGE WIRES OR OTHER APPROVED HANGERS, INCLUDING THEIR ATTACHMENT TO THE STRUCTURE ABOVE, SHALL BE CAPABLE OF SUPPORTING FOUR (4) TIMES THE WEIGHT OF THE FIXTURE.

7- SERVICES WITHIN THE CEILING:

7.01- ALL FLEXIBLE SPRINKLER HOSE FITTING MOUNTING BRACKETS, CEILING-MOUNTED AIR TERMINALS OR OTHER SERVICES SHALL BE POSITIVELY ATTACHED TO THE CEILING SUSPENSION SYSTEMS BY MECHANICAL MEANS. SCREWS OR APPROVED FASTENERS ARE REQUIRED. A MINIMUM OF TWO ATTACHMENTS ARE REQUIRED AT EACH COMPONENT.
7.02- CEILING-MOUNTED AIR TERMINALS OR OTHER SERVICES WEIGHING LESS THAN OR EQUAL TO 20 LB. SHALL HAVE ONE (1) #12 GAGE SLACK SAFETY WIRE ATTACHED FROM THE TERMINAL OR SERVICE TO THE STRUCTURE ABOVE.
7.03- FLEXIBLE SPRINKLER HOSE FITTINGS, CEILING-MOUNTED AIR TERMINALS OR OTHER SERVICES WEIGHING MORE THAN 20 LB. BUT LESS THAN OR EQUAL TO 56 LB. SHALL HAVE TWO (2) #12 GAGE SLACK SAFETY WIRES (AT DIAGONAL CORNERS) CONNECTED FROM THE TERMINAL OR SERVICE TO THE STRUCTURE ABOVE.
7.04- FLEXIBLE SPRINKLER HOSE FITTINGS, CEILING-MOUNTED AIR TERMINALS OR OTHER SERVICES WEIGHING MORE THAN 56 LB. SHALL BE SUPPORTED DIRECTLY FROM THE STRUCTURE ABOVE BY NOT LESS THAN FOUR (4) TAUT #12 GAGE HANGER WIRES ATTACHED FROM THE TERMINAL OR SERVICE TO THE STRUCTURE ABOVE OR OTHER APPROVED HANGERS.

8- OTHER DEVICES WITHIN THE CEILING:

8.01- ALL LIGHTWEIGHT MISCELLANEOUS DEVICES, SUCH AS STROBE LIGHTS, OCCUPANCY SENSORS, SPEAKERS, EXIT SIGNS, ETC., SHALL BE ATTACHED TO THE CEILING GRID. IN ADDITION, DEVICES WEIGHING MORE THAN 10 LBS. SHALL HAVE A #12 GAGE SLACK SAFETY WIRE ANCHORED TO THE STRUCTURE ABOVE. DEVICES WEIGHING MORE THAN 20 LBS. SHALL BE SUPPORTED INDEPENDENTLY FROM THE STRUCTURE ABOVE.

CEILING NOTES (LAY-IN PANEL)
1 1/2" = 1'-0" | 1

CITY OF GARDENA – INCORPORATED 1930 – FREEWAY CITY

PREPARED BY:

SVA ARCHITECTS
6 HUTTON CENTRE DR, SUITE 1150
SANTA ANA, CA 92707
T 949.809.3380 WWW.SVA-ARCHITECTS.COM

THIS DOCUMENT CONTAINS INFORMATION PROPRIETARY TO SVA ARCHITECTS INC. AND IS FURNISHED IN CONFIDENCE FOR THE LIMITED PURPOSE OF EVALUATION, BIDDING OR REVIEW. THIS DOCUMENT OR ITS CONTENTS MAY NOT BE USED FOR ANY OTHER PURPOSE AND MAY NOT BE REPRODUCED OR DISCLOSED TO OTHERS WITHOUT THE PRIOR WRITTEN CONSENT OF SVA ARCHITECTS INC. ALL RIGHTS RESERVED, © COPYRIGHT 2018.

LICENSED ARCHITECT – ROBERT M. SIMONS – No. C-18301 – JAN. 31, 2025 – STATE OF CALIFORNIA

REVISIONS

NO.	DESCRIPTION	DATE	APPROVED
1	90% CD SUBMITTAL	12/15/2022	
2	100% CD SUBMITTAL	05/01/2023	
3	FINAL SUBMITTAL	06/30/2023	

B.M.: THE CITY OF GARDENA BENCHMARK NO. 5D-15
ELEV. = 43.508'

CITY OF GARDENA
DEPARTMENT OF PUBLIC WORKS - ENGINEERING
DETAILS CEILING
COMMUNITY AQUATICS & SENIOR CENTER
A62.2

	INITIAL	DATE
DESIGNED BY	AP/EC	05/25/2022
DRAWN BY	NC	06/20/23
CHECKED BY	DB	06/29/23

APPROVED BY:
APPROVED BY: DIRECTOR OF PUBLIC WORKS

SHT. 73 OF 195 DWG. NO. 5-2606

GARDENA COMMUNITY AQUATICS AND SENIOR CENTER – CITY SUBMITTAL SET

FILE PATH: C:\Users\dbrown\Documents\Gardena_Community Pool and Senior Center_dbrown@sva-architects.com.rvt
PLOT TIME: 10/12/2023 10:31:10 AM

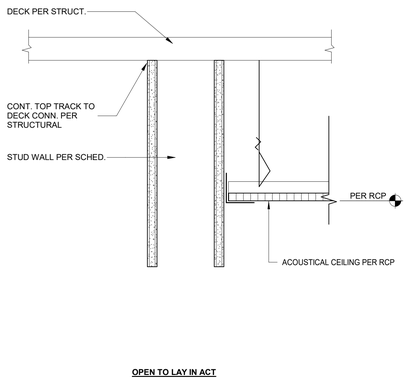

ACT CLG. EDGE AT MTL. STUD WALL | 3" = 1'-0" | 15

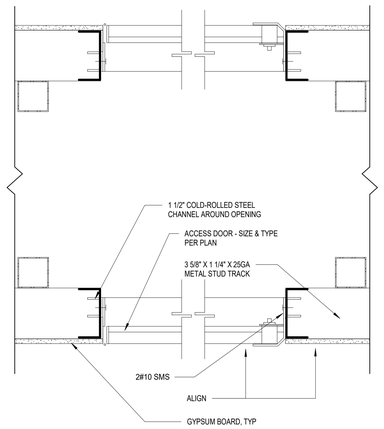

ACCESS PANEL, CEILING, TYP. | 1 1/2" = 1'-0" | 12

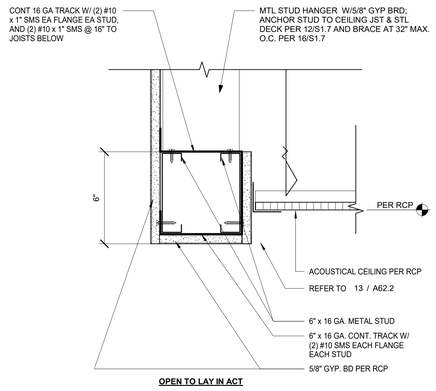

CEILING SOFFIT-LAY IN ACT | 3" = 1'-0" | 9

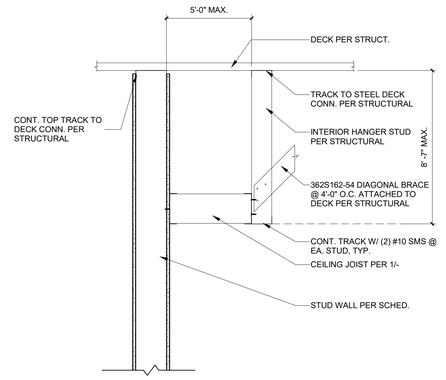

GYP. BD. CLG. EDGE AT MTL STUD WALL | 1" = 1'-0" | 6

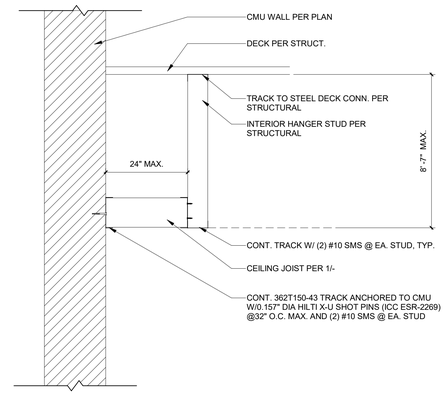

GYP. BOARD CEILING EDGE AT CMU | 1" = 1'-0" | 3

STUCCO CEILING AT TILE WALL | 3" = 1'-0" | 14

PLASTER SOFFIT- CONTROL JOINT | 6" = 1'-0" | 11

ROLLER SHADE AT POCKET | 3" = 1'-0" | 8

HARD LID @ STUD HANGER | 1 1/2" = 1'-0" | 5

CEILING SOFFIT- HARD LID | 3" = 1'-0" | 2

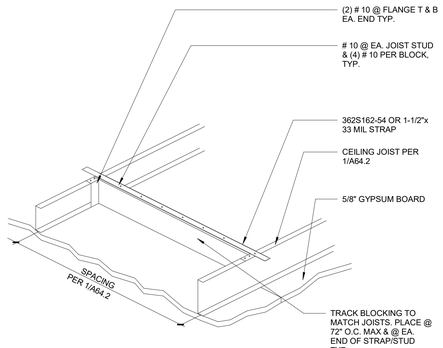

GYPSUM BOARD CEILING @ RR. | 1 1/2" = 1'-0" | 7

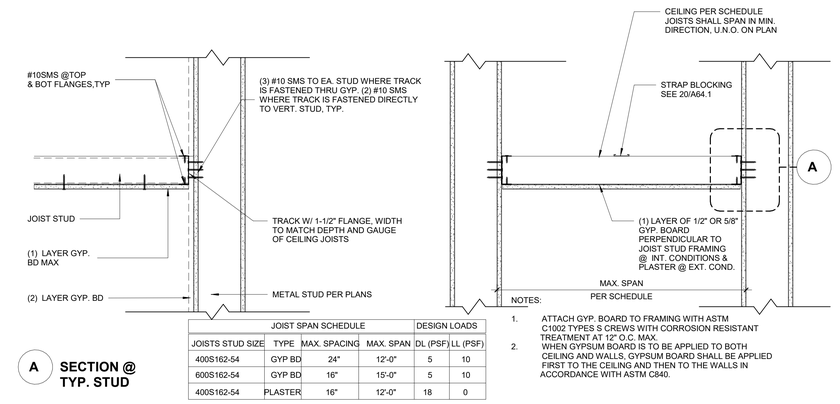

A **SECTION @ TYP. STUD**

JOIST SPAN SCHEDULE				DESIGN LOADS	
JOISTS STUD SIZE	TYPE	MAX. SPACING	MAX. SPAN	DL (PSF)	LL (PSF)
400S162-54	GYP BD	24"	12'-0"	5	10
600S162-54	GYP BD	16"	15'-0"	5	10
400S162-54	PLASTER	16"	12'-0"	18	0

NOTES:
1. ATTACH GYP. BOARD TO FRAMING WITH ASTM C1002 TYPES S CREWS WITH CORROSION RESISTANT TREATMENT AT 12" O.C. MAX.
2. WHEN GYPSUM BOARD IS TO BE APPLIED TO BOTH CEILING AND WALLS, GYPSUM BOARD SHALL BE APPLIED FIRST TO THE CEILING AND THEN TO THE WALLS IN ACCORDANCE WITH ASTM C840.

JOIST GYP-BOARD SECTION | 1 1/2" = 1'-0" | 1

PREPARED BY:
SVA ARCHITECTS
6 HUTTON CENTRE DR, SUITE 1150
SANTA ANA, CA 92707
T 949.809.3380 WWW.SVA-ARCHITECTS.COM

THIS DOCUMENT CONTAINS INFORMATION PROPRIETARY TO SVA ARCHITECTS INC. AND IS FURNISHED IN CONFIDENCE FOR THE LIMITED PURPOSE OF EVALUATION, BIDDING OR REVIEW. THIS DOCUMENT OR ITS CONTENTS MAY NOT BE USED FOR ANY OTHER PURPOSE AND MAY NOT BE REPRODUCED OR DISCLOSED TO OTHERS WITHOUT THE PRIOR WRITTEN CONSENT OF SVA ARCHITECTS INC. ALL RIGHTS RESERVED. © COPYRIGHT 2015.

LICENSED ARCHITECT ROBERT M. SIMMONS No. C-18801 JAN 31, 2025 STATE OF CALIFORNIA

REVISIONS

NO.	DESCRIPTION	DATE	APPROVED
1	90% CD SUBMITTAL	12/15/2022	
2	100% CD SUBMITTAL	05/01/2023	
3	FINAL SUBMITTAL	06/30/2023	

B.M.: THE CITY OF GARDENA BENCHMARK NO. SD-15 ELEV. = 43.508'

CITY OF GARDENA
DEPARTMENT OF PUBLIC WORKS - ENGINEERING

DETAILS CEILING

COMMUNITY AQUATICS & SENIOR CENTER

A62.3

	INITIAL	DATE
DESIGNED BY	AF/EC	05/25/2022
DRAWN BY	NC	06/20/23
CHECKED BY	DB	06/29/23

APPROVED BY:

APPROVED BY: DIRECTOR OF PUBLIC WORKS

SHT. 74 OF 195 DWG. NO. 5-2606

GARDENA COMMUNITY AQUATICS AND SENIOR CENTER - CITY SUBMITTAL SET
PLOT DATE: 6/30/2023 9:31:11 AM
PLOT BY: C:\Users\nicolec\Documents\Gardena Community Pool and Senior Center_dbsva-anthro (on SVA-NL).rvt

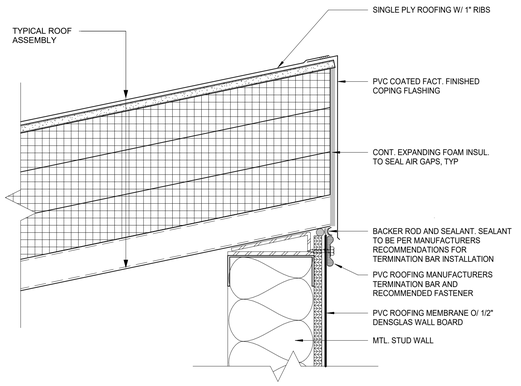

ROOF RIDGE DETAIL | 3" = 1'-0" | 15

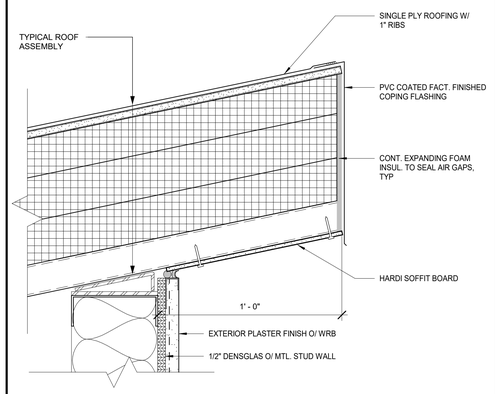

ROOF OVERHANG DETAIL | 3" = 1'-0" | 12

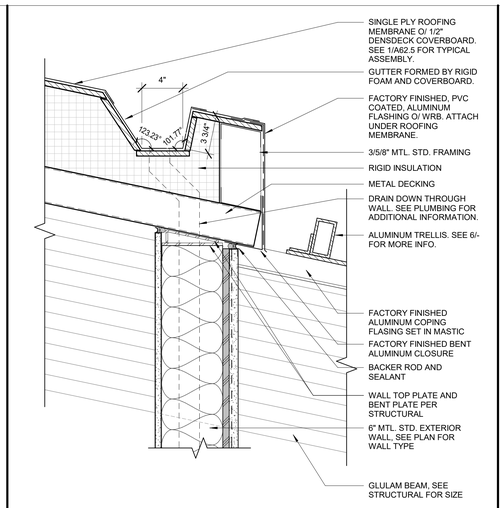

INTEGRAL GUTTER DETAIL | 1 : 6 | 9

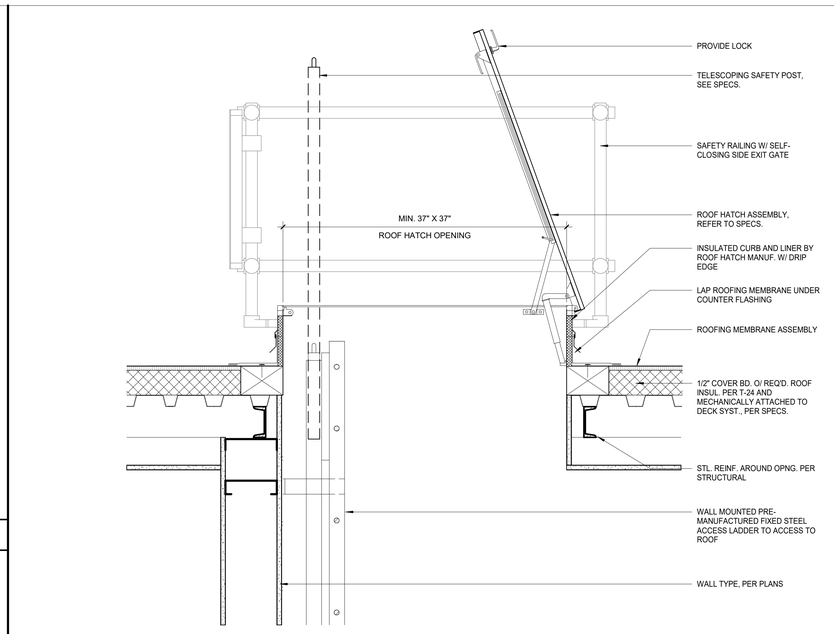

ROOF HATCH | 1 1/2" = 1'-0" | 3

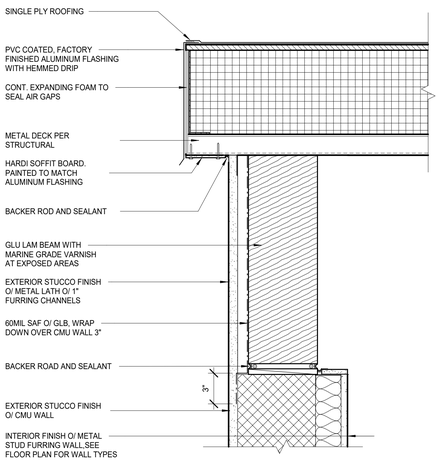

GLULAM / ROOF FURRING DETAIL | 1 : 6 | 14

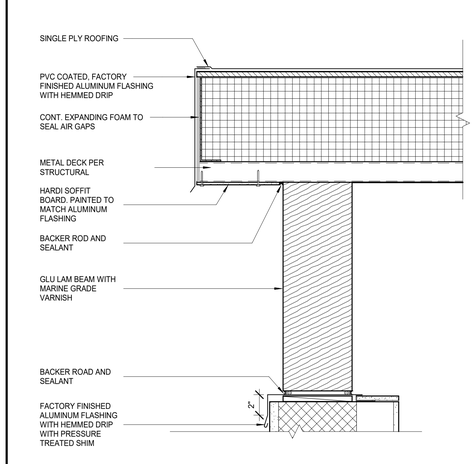

GLULAM / ROOF EDGE DETAIL | 1 : 6 | 11

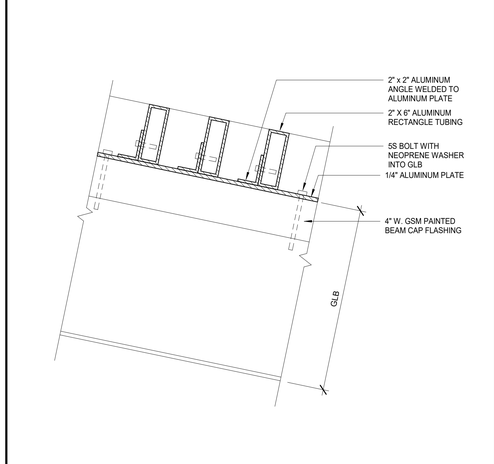

ALUMINUM TRELLIS DETAIL | 1 : 6 | 8

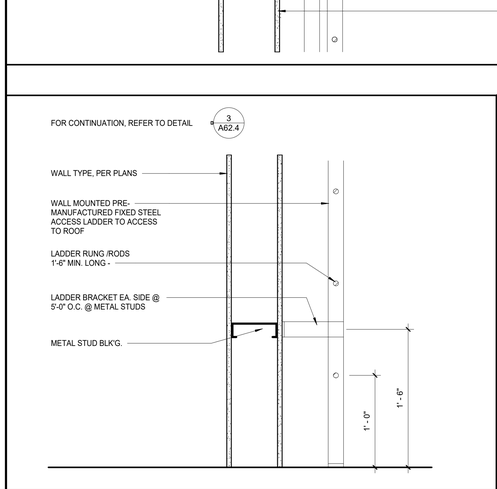

ACCESS LADDER @ BASE | 1 1/2" = 1'-0" | 5

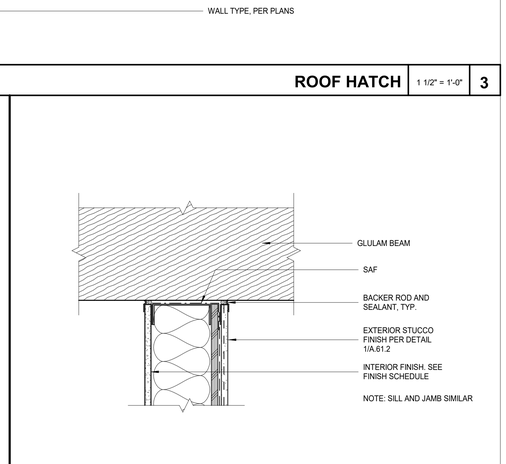

GLULAM BEAM EDGE DETAIL | 1 : 6 | 2

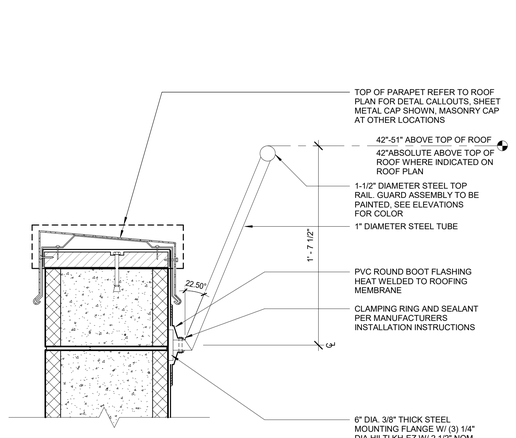

GUARDRAIL AT PARAPET | 1 : 6 | 13

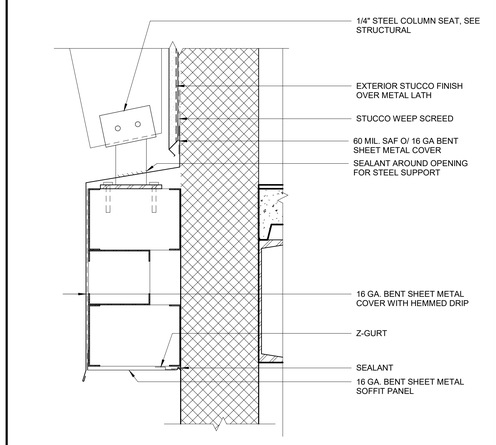

GLULAM POST BASE | 1 : 6 | 10

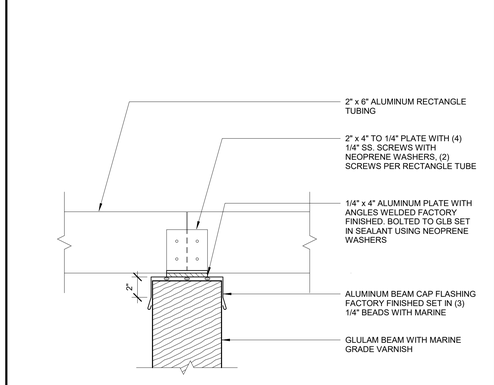

ALUMINUM TRELLIS CONNECTION | 1 : 6 | 7

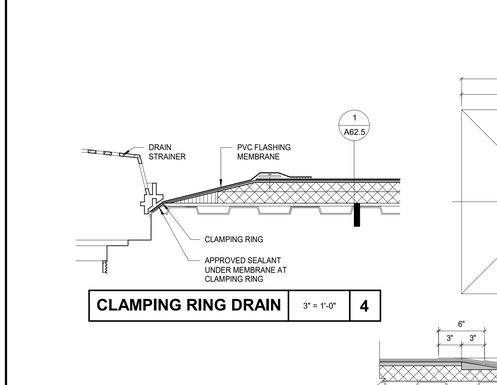

CLAMPING RING DRAIN | 3" = 1'-0" | 4

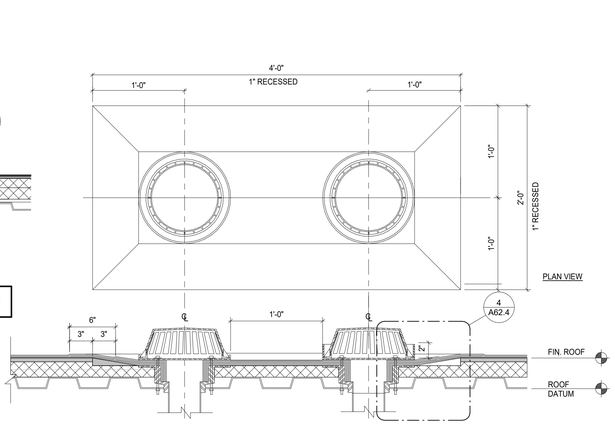

NOTES:
1. STEEL CLAMPING RINGS MUST BE USED ON ALL ROOF AND OVERFLOW DRAINS.
2. AFTER COMPLETE INSTALLATION OF THE ROOFING SYSTEM, CONTRACTOR SHALL INSPECT AND WATER TEST ALL ROOF DRAINS TO ASSURE THAT NO CLOGGING OF THE DRAINAGE SYSTEM IS PRESENT. THE ROOF DRAIN LEADER SHOULD BE IN SUCH CONDITION THAT THE FULL DIAMETER OF THE DRAIN LEADER IS CLEAR.
3. MEMBRANE FLASHING SHALL EXTEND UNDER CLAMPING RING. EXTENT PER MANUF. SPECS.

ROOF DRAIN DETAIL STEEL DECK | 1 1/2" = 1'-0" | 1

CITY OF GARDENA · FREEWAY CITY · INCORPORATED 1930

PREPARED BY:
SVA ARCHITECTS
6 HUTTON CENTRE DR, SUITE 1150
SANTA ANA, CA 92707
T 949.809.3380 WWW.SVA-ARCHITECTS.COM

THIS DOCUMENT CONTAINS INFORMATION PROPRIETARY TO SVA ARCHITECTS, INC. AND IS SUBMITTED IN CONFIDENCE FOR THE LIMITED PURPOSE OF EVALUATION, BIDDING OR REVIEW. THIS DOCUMENT OR ITS CONTENTS MAY NOT BE USED FOR ANY OTHER PURPOSE AND MAY NOT BE REPRODUCED OR DISCLOSED TO OTHERS WITHOUT THE PRIOR WRITTEN CONSENT OF SVA ARCHITECTS INC. ALL RIGHTS RESERVED, © COPYRIGHT 2018.

LICENSED ARCHITECT · ROBERT M. SIMPSON · No. C-17651 · JAN. 31, 2025 · STATE OF CALIFORNIA

REVISIONS

NO.	DESCRIPTION	DATE	APPROVED
1	90% CD SUBMITTAL	12/15/2022	
2	100% CD SUBMITTAL	05/01/2023	
3	FINAL SUBMITTAL	06/30/2023	

B.M.: THE CITY OF GARDENA BENCHMARK NO. SD-15 ELEV. = 43.508'

CITY OF GARDENA
DEPARTMENT OF PUBLIC WORKS - ENGINEERING

DETAILS ROOF

COMMUNITY AQUATICS & SENIOR CENTER
A62.4

	INITIAL	DATE
DESIGNED BY	AP/EC	05/25/2022
DRAWN BY	NC	06/20/23
CHECKED BY	DB	06/29/23

APPROVED BY:
APPROVED BY: DIRECTOR OF PUBLIC WORKS
SHT. 75 OF 195 DWG. NO. 5-2606

CARDENA COMMUNITY AQUATICS AND SENIOR CENTER - CITY SUBMITTAL SET
PLOT DATE: 6/30/2023 10:11 AM
FILE NAME: G:\Projects\2020\20-0xx\Gardena, Community Pool and Senior Center_dbbrandtfree-architects.com.rvt

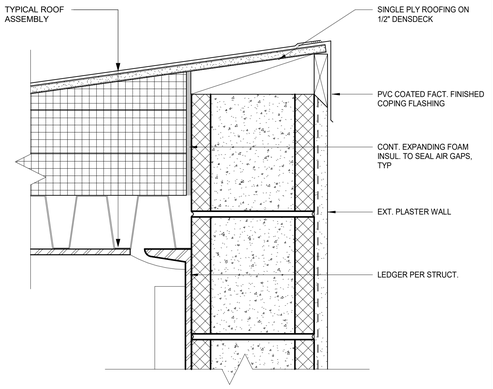

ROOFING RIDGE DETAIL | 3" = 1'-0" | 15

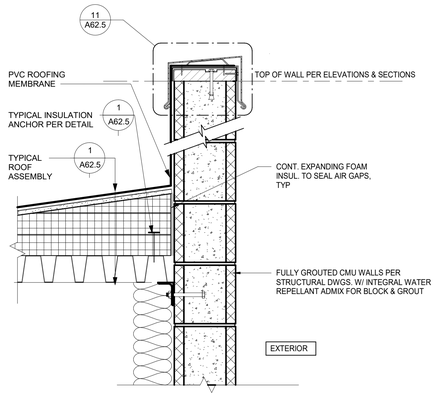

CMU PARAPET FLASHING | 1 1/2" = 1'-0" | 12

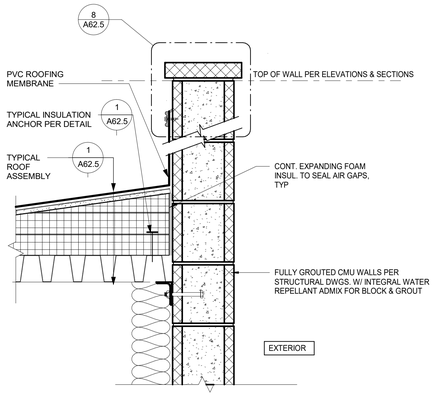

CMU PARAPET CAP BLOCK | 1 1/2" = 1'-0" | 9

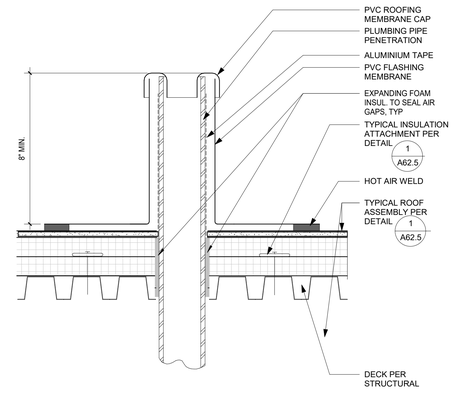

PLUMBING VENT PIPE PENETRATION | 1 1/2" = 1'-0" | 6

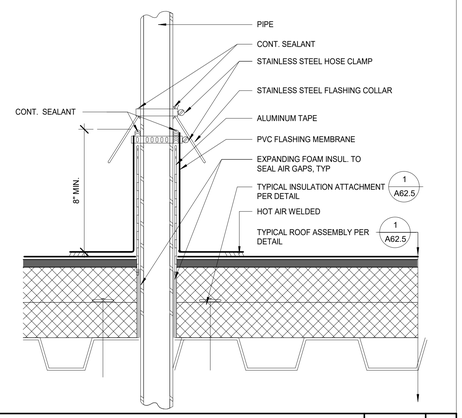

TYP. PIPE PENETRATION FLASHING | 3" = 1'-0" | 3

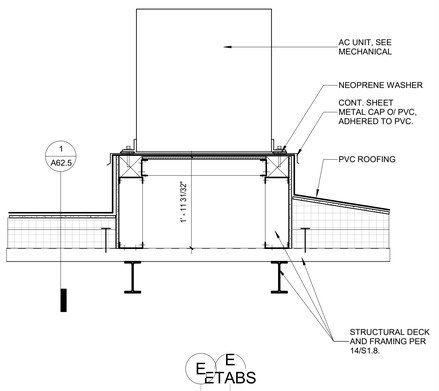

MECHANICAL UNIT CURB | 3/4" = 1'-0" | 14

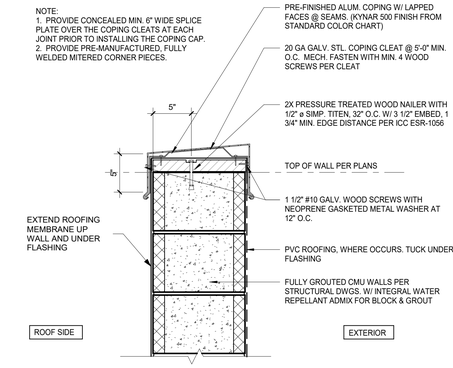

CMU WALL METAL COPING | 1 1/2" = 1'-0" | 11

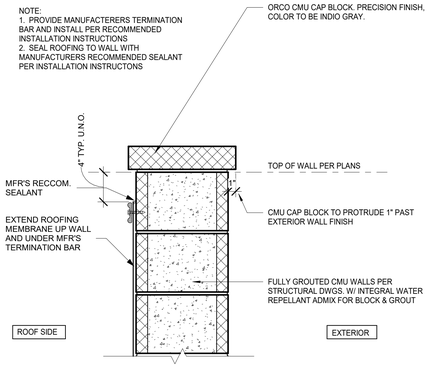

CMU WALL CAP BLOCK | 1 1/2" = 1'-0" | 8

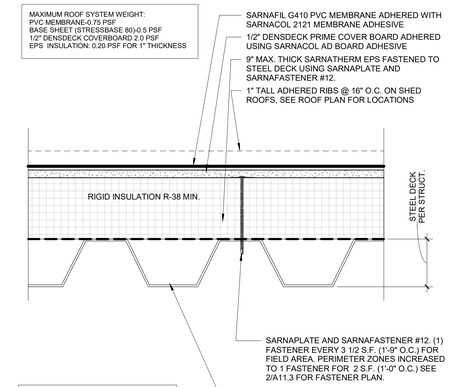

TYPICAL ROOF ASSEMBLY SECTION | 3" = 1'-0" | 5

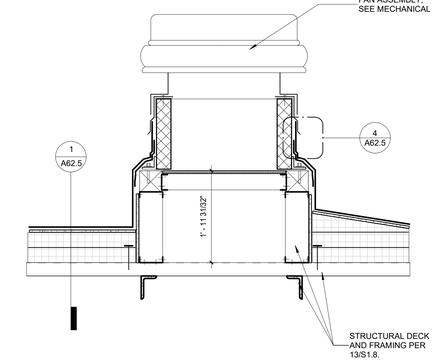

EXHAUST & RELIEF FAN DETAIL | 3/4" = 1'-0" | 2

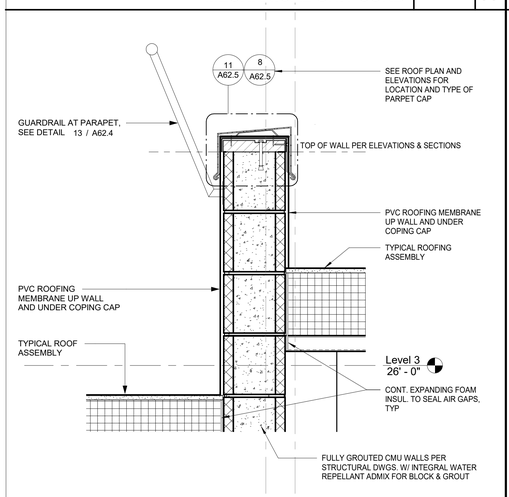

CMU PARAPET W/ ROOFS BOTH SIDES | 1 1/2" = 1'-0" | 13

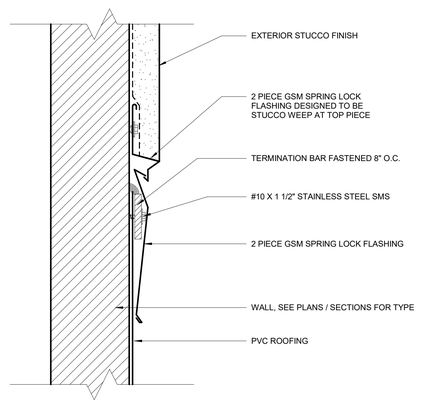

2 PIECE REGLET FLASHING | 6" = 1'-0" | 10

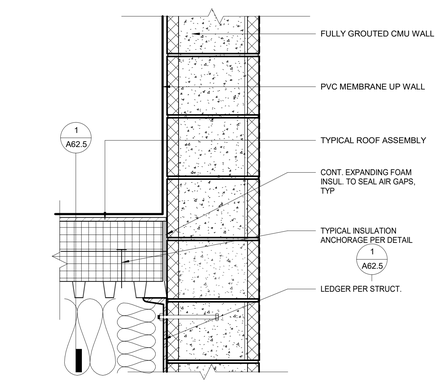

LOW SLOPE ROOF TO CMU | 1 1/2" = 1'-0" | 7

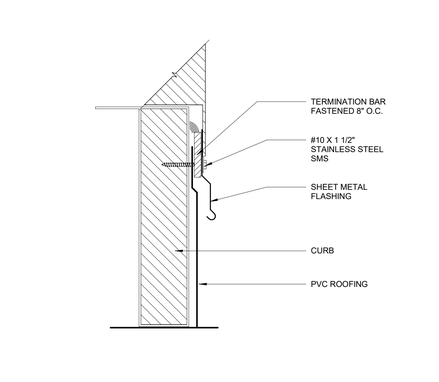

EQUIP. FLASHING | 6" = 1'-0" | 4

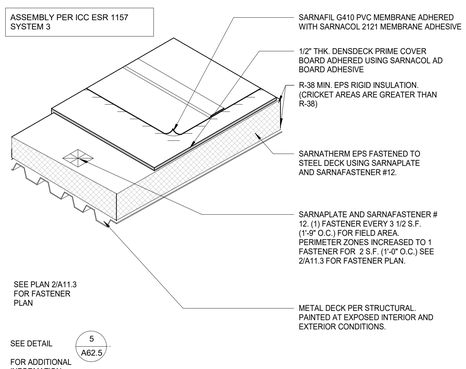

TYPICAL ROOF ASSEMBLY | 1" = 1'-0" | 1

CITY OF GARDENA — PRIDE OF ACHIEVEMENT — INCORPORATED 1930

PREPARED BY:

SVA ARCHITECTS
6 HUTTON CENTRE DR, SUITE 1150
SANTA ANA, CA 92707
T 949.809.3380 WWW.SVA-ARCHITECTS.COM

THIS DOCUMENT CONTAINS INFORMATION PROPRIETARY TO SVA ARCHITECTS INC. AND IS FURNISHED IN CONFIDENCE FOR THE LIMITED PURPOSE OF EVALUATION, BIDDING OR REVIEW. THIS DOCUMENT OR ITS CONTENTS MAY NOT BE USED FOR ANY OTHER PURPOSE AND MAY NOT BE REPRODUCED OR DISCLOSED TO OTHERS WITHOUT THE PRIOR WRITTEN CONSENT OF SVA ARCHITECTS INC. ALL RIGHTS RESERVED. © COPYRIGHT 2016.

LICENSED ARCHITECT — ROBERT M. SIMPSON — No. C-18801 — JAN. 31, 2025 — STATE OF CALIFORNIA

REVISIONS

NO.	DESCRIPTION	DATE	APPROVED
1	90% CD SUBMITTAL	12/15/2022	
2	100% CD SUBMITTAL	05/01/2023	
3	FINAL SUBMITTAL	06/30/2023	

B.M.: THE CITY OF GARDENA BENCHMARK NO. SD-15 ELEV. = 43.508'

CITY OF GARDENA
DEPARTMENT OF PUBLIC WORKS - ENGINEERING

DETAILS ROOF

COMMUNITY AQUATICS & SENIOR CENTER

A62.5

	INITIAL	DATE
DESIGNED BY	AP/EC	05/25/2022
DRAWN BY	NC	06/20/23
CHECKED BY	DB	06/29/23

APPROVED BY:

APPROVED BY: DIRECTOR OF PUBLIC WORKS

SHT. 76 OF 195 DWG. NO. 5-2606

CARDENA COMMUNITY AQUATICS AND SENIOR CENTER - CITY SUBMITTAL SET

PLOT DATE: 6/30/2023 9:01:17 AM
PLOT NAME: C:\Users\dbrown\Documents\Gardena Community Pool and Senior Center_dbrown@sva-architects.com.rvt

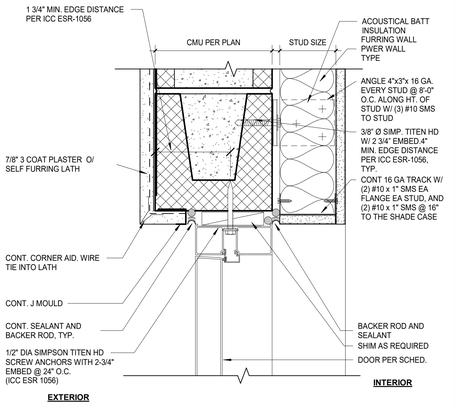

DOOR HEAD/JAMB @ CMU W/ PLASTER | 3" = 1'-0" | 15

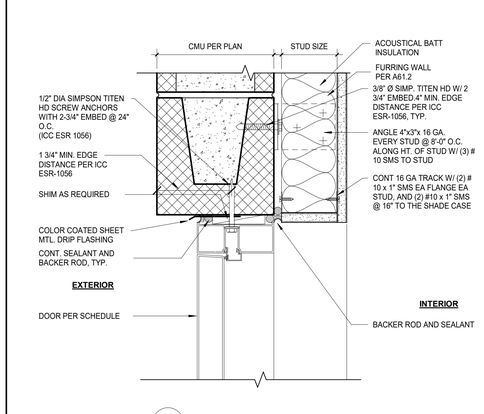

DOOR HEAD/JAMB AT CMU | 3" = 1'-0" | 12

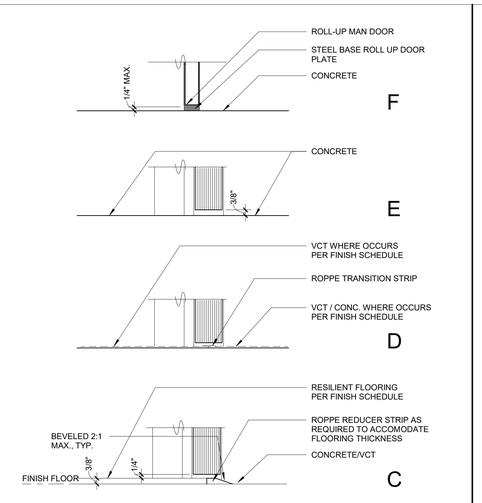

THRESHOLD DETAILS | 3" = 1'-0" | 9

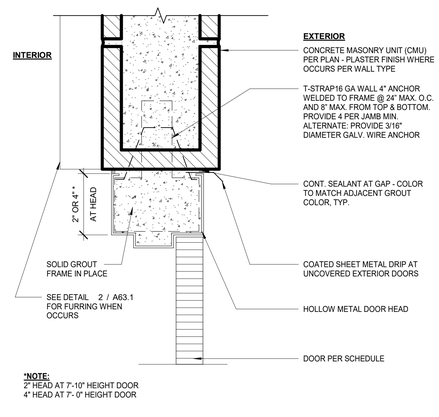

DOOR HEAD AT CMU WALL | 3" = 1'-0" | 6

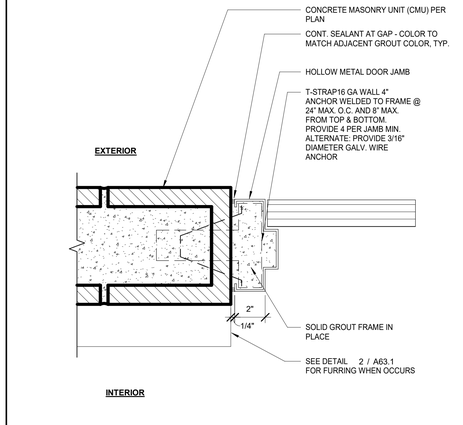

DOOR JAMB AT CMU WALL | 3" = 1'-0" | 3

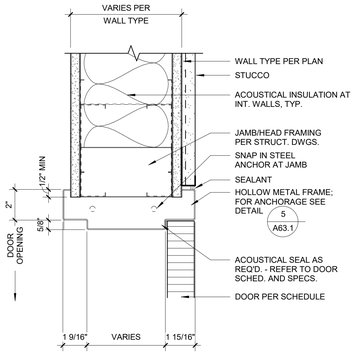

H.M. FRAME HEAD & JAMB AT INT. | 3" = 1'-0" | 14

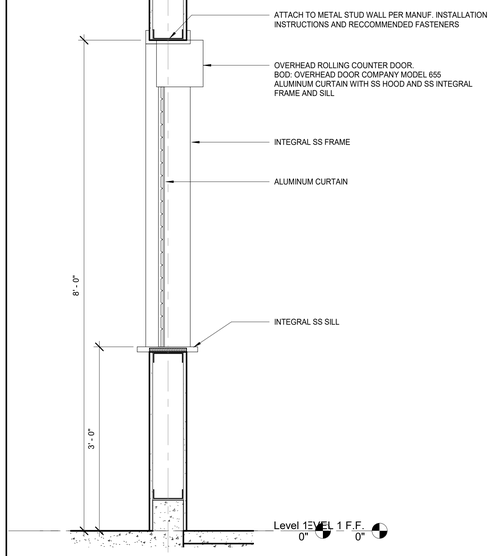

ROLLUP COUNTER DOOR | 1" = 1'-0" | 11

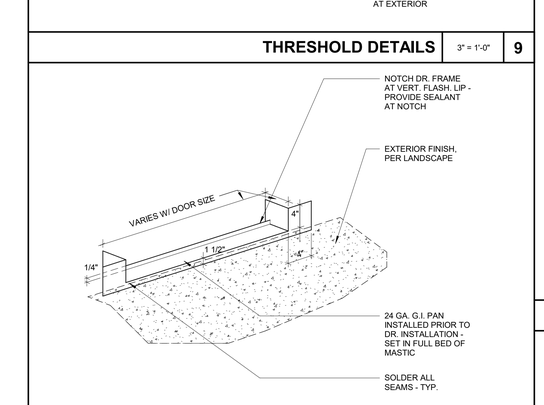

EXT. DOOR THRESHOLD FLASHING | 3" = 1'-0" | 8

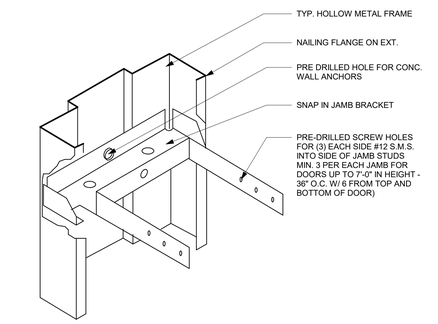

H.M. DOOR FRAME JAMB ANCHORS | 1 1/2" = 1'-0" | 5

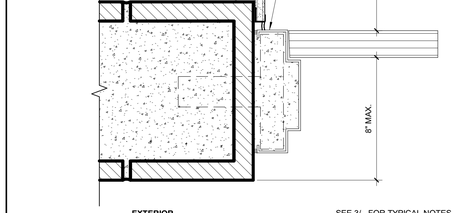

FURRING AT DOOR HEAD & JAMB | 3" = 1'-0" | 2

STOREFRONT @ DOOR HEAD/JAMB | 3" = 1'-0" | 13

EXTERIOR DOOR THRESHOLD @ EXT. STAIR | 3" = 1'-0" | 10

EXTERIOR DOOR THRESHOLD | 3" = 1'-0" | 7

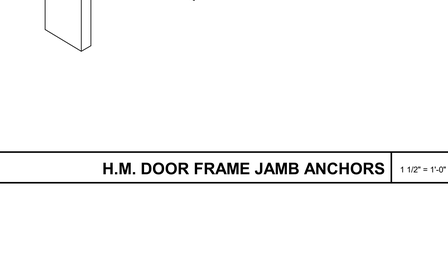

ALUMINUM FRAME HEAD/JAMB AT INT. | 3" = 1'-0" | 4



H.M. FRAME HEAD & JAMB AT INT. | 3" = 1'-0" | 1

PREPARED BY:
6 HUTTON CENTRE DR, SUITE 1150
SANTA ANA, CA 92707
T 949.809.3380 WWW.SVA-ARCHITECTS.COM

THIS DOCUMENT CONTAINS INFORMATION PROPRIETARY TO SVA ARCHITECTS INC. AND IS FURNISHED IN CONFIDENCE FOR THE LIMITED PURPOSE OF EVALUATION, BIDDING OR REVIEW. THIS DOCUMENT OR ITS CONTENTS MAY NOT BE USED FOR ANY OTHER PURPOSE AND MAY NOT BE, REPRODUCED OR DISCLOSED TO OTHERS WITHOUT THE PRIOR WRITTEN CONSENT OF SVA ARCHITECTS INC. ALL RIGHTS RESERVED, © COPYRIGHT 2018.

LICENSED ARCHITECT ROBERT M. SIMPSON No. C-19851 JAN. 31, 2025 STATE OF CALIFORNIA

REVISIONS

NO.	DESCRIPTION	DATE	APPROVED
1	90% CD SUBMITTAL	12/15/2022	
2	100% CD SUBMITTAL	05/01/2023	
3	FINAL SUBMITTAL	06/30/2023	

B.M.: THE CITY OF GARDENA BENCHMARK NO. SD-15 ELEV. = 43.508'

	INITIAL	DATE
DESIGNED BY	AP/EC	05/25/2022
DRAWN BY	NC	06/20/23
CHECKED BY	DB	06/29/23

APPROVED BY:

APPROVED BY: DIRECTOR OF PUBLIC WORKS

CITY OF GARDENA
DEPARTMENT OF PUBLIC WORKS - ENGINEERING

DETAILS DOOR

COMMUNITY AQUATICS & SENIOR CENTER
A63.1

SHT. 77 OF 195 DWG. NO. 5-2606

CARDENA COMMUNITY AQUATICS AND SENIOR CENTER - CITY SUBMITTAL SET
PLOT DATE: 12/15/2022 2:19:47 PM
PLOT BY: Nicholas Cabrera
P:\Projects\Gardena\Community Pool and Senior Center_Gardena\Revit\Gardena_Community Pool and Senior Center_detailed@sva-architects.com.rvt

LOUVER HEAD AT CMU — 3" = 1'-0" — 15

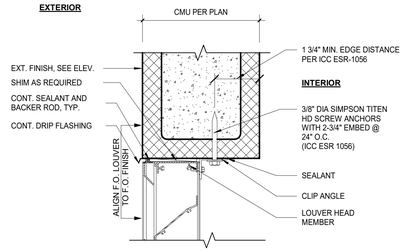

WINDOW HEAD @ PLASTER — 3" = 1'-0" — 12

STOREFRONT NOTES:

CLEAR ANODIZED FINISH FOR ALL STOREFRONT MULLIONS, DOORS, ETC.

INCLUDES WINDOW MULLIONS.

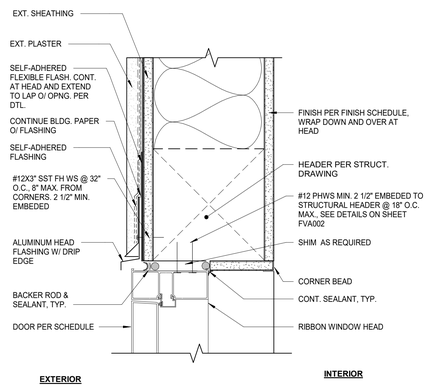

WINDOW HEAD @ PLASTER — 3" = 1'-0" — 9

STOREFRONT NOTES:

CLEAR ANODIZED FINISH FOR ALL STOREFRONT MULLIONS, DOORS, ETC.

INCLUDES WINDOW MULLIONS.

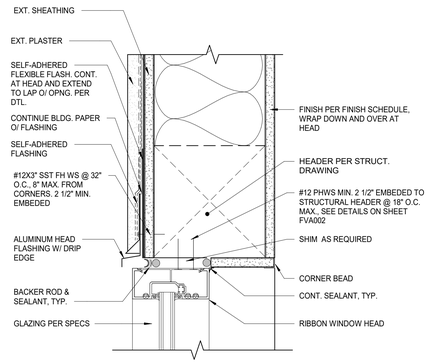

HEAD/JAMB @ CMU W/ PLASTER — 3" = 1'-0" — 6

STOREFRONT NOTES:

CLEAR ANODIZED FINISH FOR ALL STOREFRONT MULLIONS, DOORS, ETC.

INCLUDES WINDOW MULLIONS.

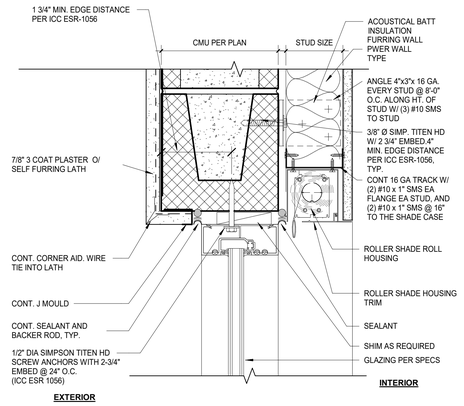

WINDOW HEAD/JAMB AT CMU — 3" = 1'-0" — 3

STOREFRONT NOTES:

CLEAR ANODIZED FINISH FOR ALL STOREFRONT MULLIONS, DOORS, ETC.

INCLUDES WINDOW MULLIONS.

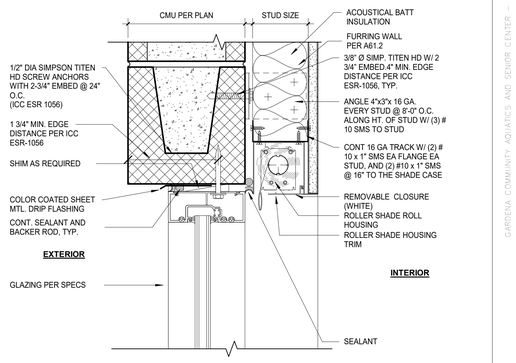

LOUVER JAMB AT CMU — 3" = 1'-0" — 14

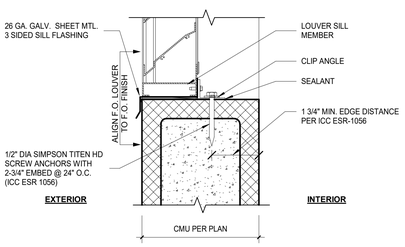

WINDOW JAMB @ PLASTER — 3" = 1'-0" — 11

STOREFRONT NOTES:

CLEAR ANODIZED FINISH FOR ALL STOREFRONT MULLIONS, DOORS, ETC.

INCLUDES WINDOW MULLIONS.

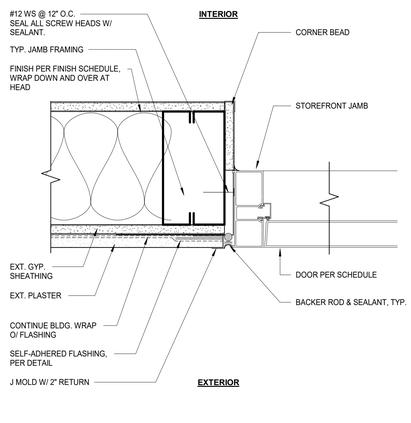

WINDOW JAMB @ PLASTER — 3" = 1'-0" — 8

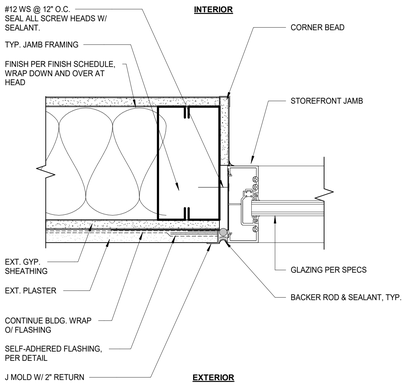

STOREFRONT NOTES:

CLEAR ANODIZED FINISH FOR ALL STOREFRONT MULLIONS, DOORS, ETC.

INCLUDES WINDOW MULLIONS.

GLAZED WALL DOOR THRESHOLD — 3" = 1'-0" — 5

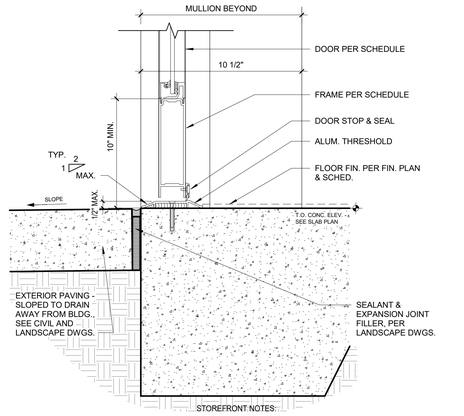

STOREFRONT NOTES:

CLEAR ANODIZED FINISH FOR ALL STOREFRONT MULLIONS, DOORS, ETC.

INCLUDES WINDOW MULLIONS.

SILL AT CMU W/ EX. PLASTER — 3" = 1'-0" — 2

STOREFRONT NOTES:

CLEAR ANODIZED FINISH FOR ALL STOREFRONT MULLIONS, DOORS, ETC.

INCLUDES WINDOW MULLIONS.

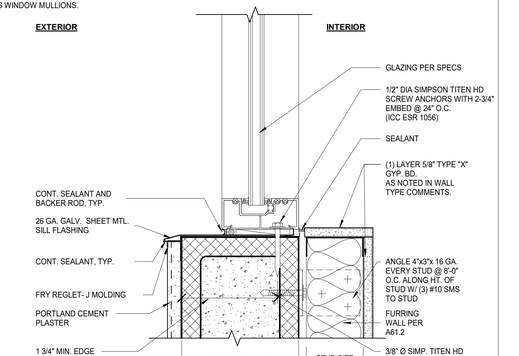

LOUVER SILL AT CMU — 3" = 1'-0" — 13

STOREFRONT HEAD/JAMB/SILL @ INT. — 3" = 1'-0" — 10

STOREFRONT NOTES:

CLEAR ANODIZED FINISH FOR ALL STOREFRONT MULLIONS, DOORS, ETC.

INCLUDES WINDOW MULLIONS.

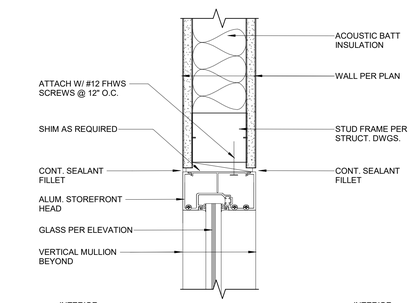

WINDOW SILL @ PLASTER — 3" = 1'-0" — 7

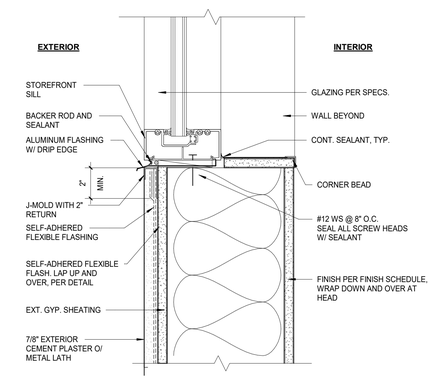

GLAZED WALL SILL — 3" = 1'-0" — 4

STOREFRONT NOTES:

CLEAR ANODIZED FINISH FOR ALL STOREFRONT MULLIONS, DOORS, ETC.

INCLUDES WINDOW MULLIONS.

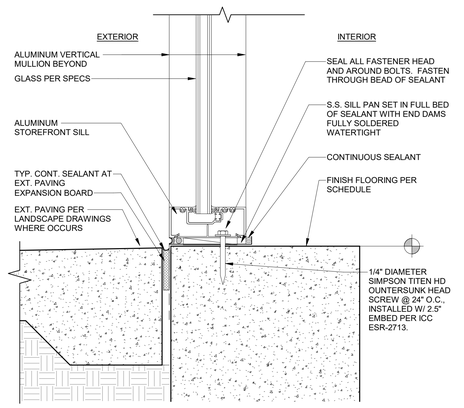

STOREFRONT NOTES:

CLEAR ANODIZED FINISH FOR ALL STOREFRONT MULLIONS, DOORS, ETC.

INCLUDES WINDOW MULLIONS.

WINDOW SILL AT CMU — 3" = 1'-0" — 1

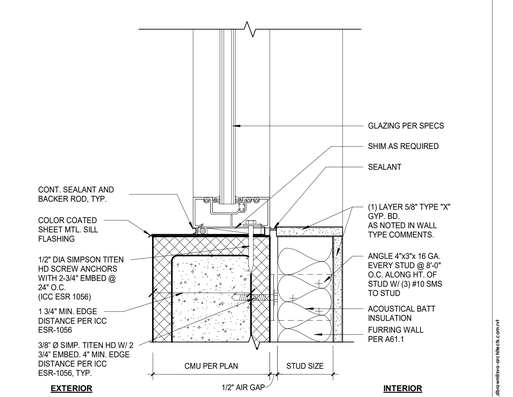

CITY OF GARDENA — INCORPORATED 1930

PREPARED BY:

SVA ARCHITECTS

6 HUTTON CENTRE DR, SUITE 1150
SANTA ANA, CA 92707
T 949.809.3380 WWW.SVA-ARCHITECTS.COM

THIS DOCUMENT CONTAINS INFORMATION PROPRIETARY TO SVA ARCHITECTS INC. AND IS FURNISHED IN CONFIDENCE FOR THE LIMITED PURPOSE OF EVALUATION, BIDDING OR CONSTRUCTION OF THE PROJECT AND SHALL NOT BE USED FOR ANY OTHER PURPOSE AND MAY NOT BE COPIED, REPRODUCED OR DISCLOSED TO OTHERS WITHOUT THE PRIOR WRITTEN CONSENT OF SVA ARCHITECTS INC. ALL RIGHTS RESERVED, © COPYRIGHT 2018.

LICENSED ARCHITECT — ROBERT M. SIMPSON — No. C-17651 — JAN. 31, 2025 — STATE OF CALIFORNIA

REVISIONS

NO.	DESCRIPTION	DATE	APPROVED
1	90% CD SUBMITTAL	12/15/2022	
2	100% CD SUBMITTAL	05/01/2023	
3	FINAL SUBMITTAL	06/30/2023	

B.M.: THE CITY OF GARDENA BENCHMARK NO. SD-15 ELEV. = 43.508'

CITY OF GARDENA
DEPARTMENT OF PUBLIC WORKS - ENGINEERING

WINDOW AND WALL ASSEMBLY DETAILS

COMMUNITY AQUATICS & SENIOR CENTER

A63.2

	INITIAL	DATE
DESIGNED BY	AP/EC	05/25/2022
DRAWN BY	NC	04/20/23
CHECKED BY	DB	04/29/23

APPROVED BY: _____ DIRECTOR OF PUBLIC WORKS

SHT. 78 OF 195 DWG. NO. S-2606

CARDENA COMMUNITY AQUATICS AND SENIOR CENTER – CITY SUBMITTAL SET

PLOT DATE: 6/1/2023 2:31:11 PM
PLOT BY: Nicholas Gardenia, Community Pool and Senior Center, ngardenia@sva-architects.com.vnt

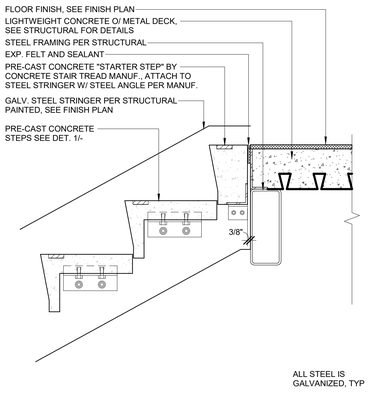

INTERIOR STAIR UP @LANDING 1 1/2" = 1'-0" **12**

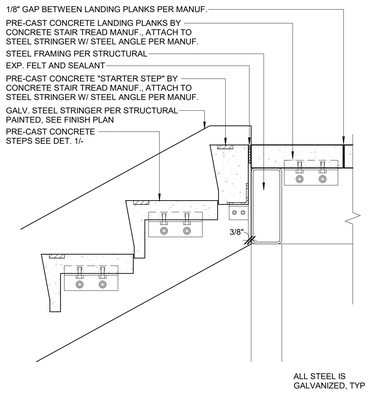

EXTERIOR STAIR UP @LANDING 1 1/2" = 1'-0" **9**

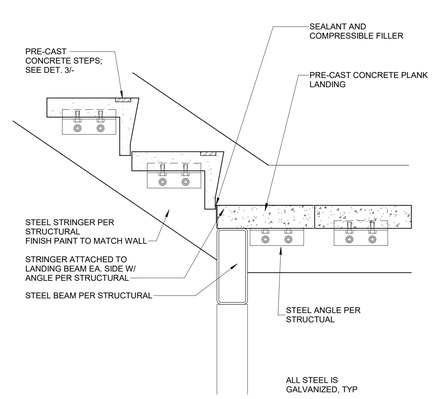

STEEL STRINGER STAIR @MID-LANDING 1 1/2" = 1'-0" **6**

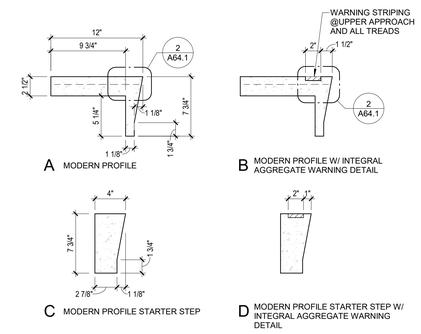

TREAD DETAILS - MODERN 1 1/2" = 1'-0" **3**

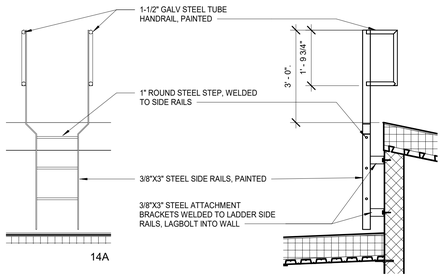

EXT. ROOF ACCESS LADDER 1/2" = 1'-0" **14**

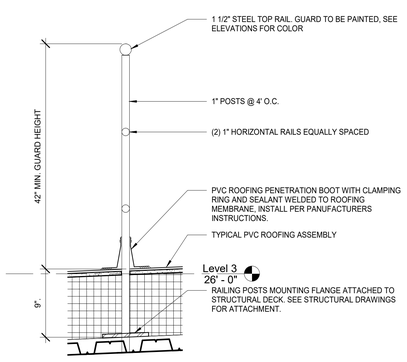

ROOF MOUNTED GUARD 1 1/2" = 1'-0" **11**

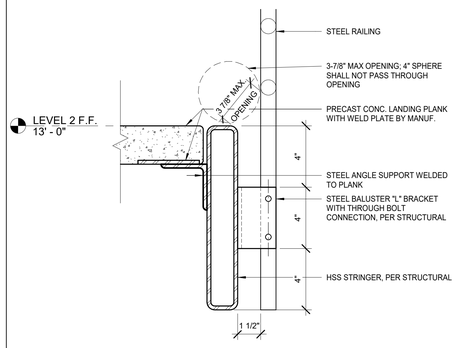

EXTERIOR STAIR RAILING ATTACHMENT 3" = 1'-0" **8**

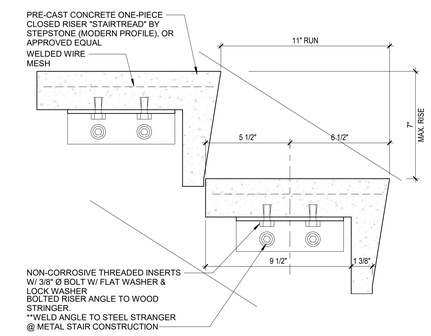

ONE-PIECE CLOSED TREAD/RISER 3" = 1'-0" **5**

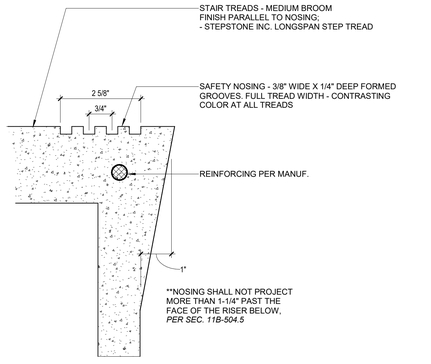

CONCRETE STAIR NOSING 6" = 1'-0" **2**

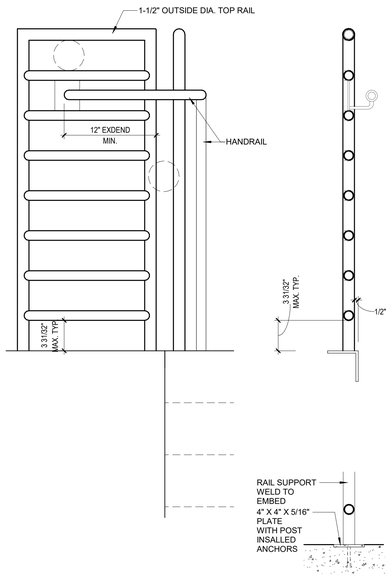

GUARDRAIL @UPPER TERMINATION LEVEL

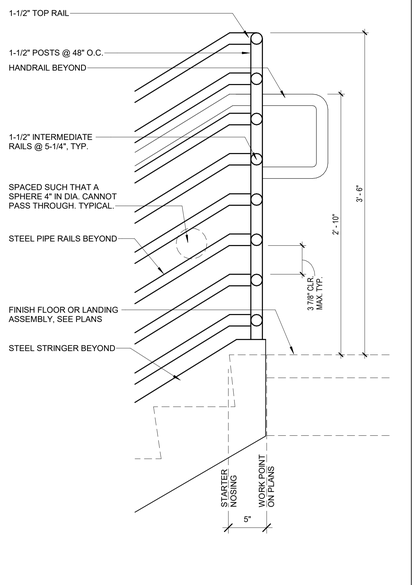

GUARDRAIL @STAIR AND LANDING

GUARDRAIL 1 1/2" = 1'-0" **10**

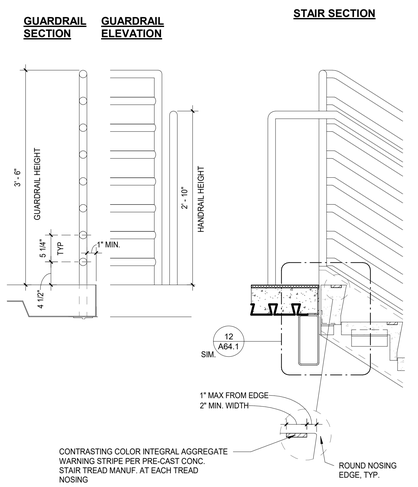

STAIR TOP LANDING DETAIL 1" = 1'-0" **7**

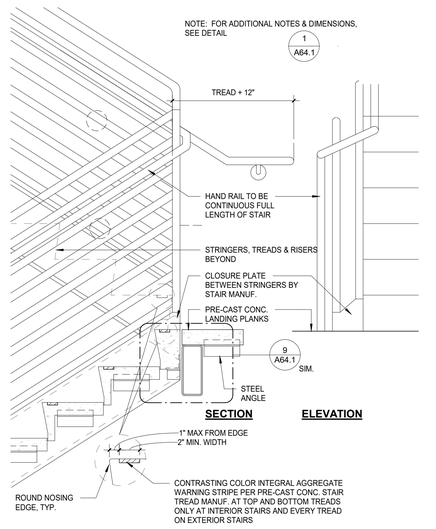

STAIR INTERMEDIATE LANDING DETAIL 1" = 1'-0" **4**

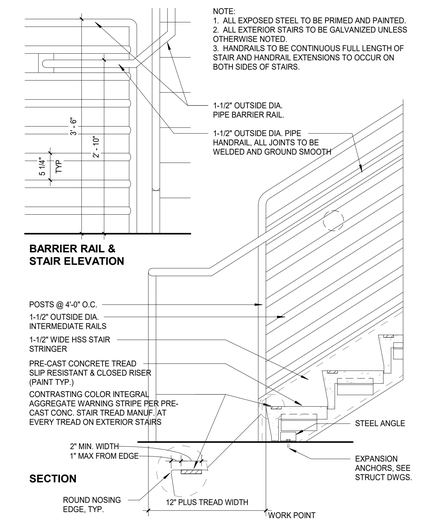

STAIR BOTTOM LANDING DETAIL 1" = 1'-0" **1**

PREPARED BY:

SVA ARCHITECTS
6 HUTTON CENTRE DR, SUITE 1150
SANTA ANA, CA 92707
T 949.809.3380 WWW.SVA-ARCHITECTS.COM

THIS DOCUMENT CONTAINS INFORMATION PROPRIETARY TO SVA ARCHITECTS INC. AND IS FURNISHED IN CONFIDENCE FOR THE LIMITED PURPOSE OF EVALUATION, BIDDING OR REVIEW. THIS DOCUMENT OR ITS CONTENTS MAY NOT BE USED FOR ANY OTHER PURPOSE AND MAY NOT BE REPRODUCED OR DISCLOSED TO OTHERS WITHOUT THE PRIOR WRITTEN CONSENT OF SVA ARCHITECTS INC. ALL RIGHTS RESERVED. © COPYRIGHT 2016.

LICENSED ARCHITECT ROBERT M. SIMPSON No. C-18301 JAN. 31, 2025 STATE OF CALIFORNIA

REVISIONS

NO.	DESCRIPTION	DATE	APPROVED
1	90% CD SUBMITTAL	12/15/2022	
2	100% CD SUBMITTAL	05/01/2023	
3	FINAL SUBMITTAL	06/30/2023	

B.M.: THE CITY OF GARDENA BENCHMARK NO. SD-15 ELEV. = 43.508'

CITY OF GARDENA
DEPARTMENT OF PUBLIC WORKS - ENGINEERING

STAIR AND RAILING DETAILS

COMMUNITY AQUATICS & SENIOR CENTER

A64.1

	INITIAL	DATE	APPROVED BY:
DESIGNED BY	AP/RC	06/26/2022	
DRAWN BY	NC	06/20/23	
CHECKED BY	DB	06/29/23	APPROVED BY: DIRECTOR OF PUBLIC WORKS

SHT. 79 OF 195 DWG. NO. 5-2606

CARDENA COMMUNITY AQUATICS AND SENIOR CENTER - CITY SUBMITTAL SET

PLOT DATE: 6/30/2023 9:37:24 AM
PLOT BY: Nicholas Cruz
FILE NAME: C:\Users\ncruz\Documents\Gardena Community Pool and Senior Center_discoveRnx-ian.hite-rk.com.rvt

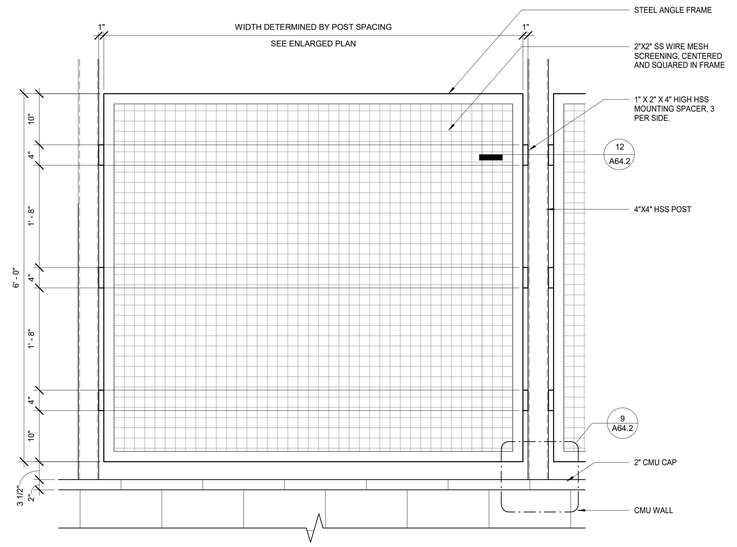

MESH INFILL PANEL | 1" = 1'-0" | 15

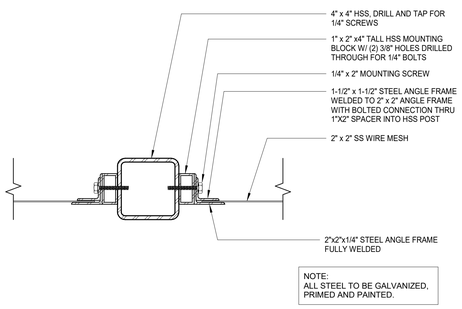

NOTE:
ALL STEEL TO BE GALVANIZED, PRIMED AND PAINTED.

MESH PANEL CONNECTION DETAIL | 3" = 1'-0" | 12

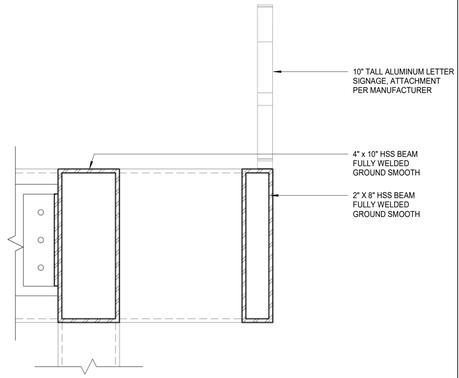

ALUMINUM LETTER DETAIL | 3" = 1'-0" | 8

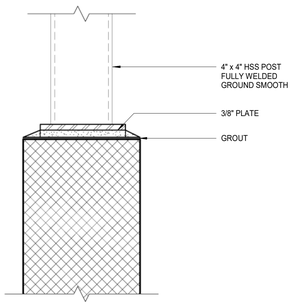

TRELLIS COLUMN BASE AT CMU WALL | 3" = 1'-0" | 4

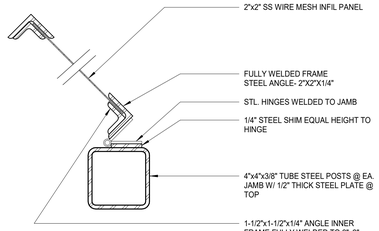

NOTES:
1. ALL GATE MATERIALS AND POSTS SHALL BE GALVANIZED.
2. ANY EXPOSED ANCHOR HARDWARS TO BE STAINLESS STEEL OR HAVE AN EXPOXY PAINT COATING

MESH PANEL GATE | 3" = 1'-0" | 11

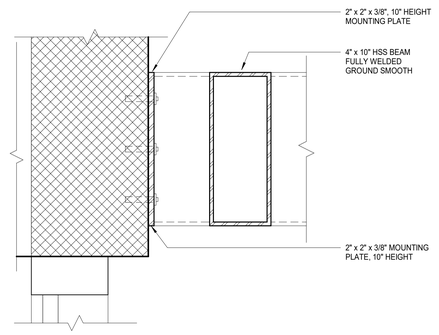

TRELLIS CONNECTION AT CMU HEAD | 3" = 1'-0" | 7

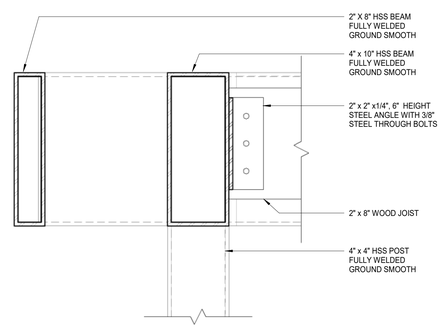

TRELLIS EDGE BEAM DETAIL | 3" = 1'-0" | 3

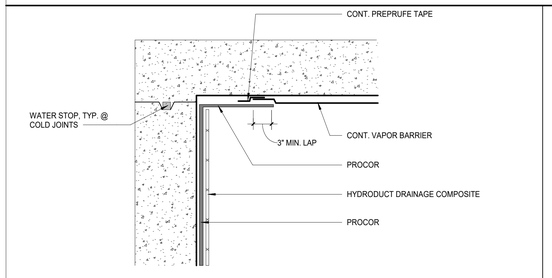

SLAB EDGE AT PIT TOP EDGE | 3/4" = 1'-0" | 18

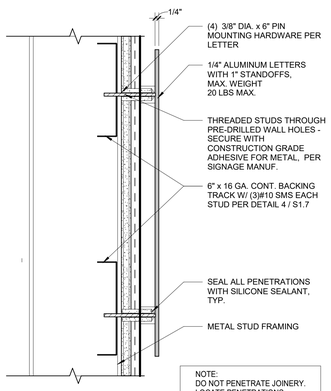

NOTE:
DO NOT PENETRATE JOINERY. LOCATE PENETRATIONS ACCORDINGLY

FASCIA MOUNTED SIGNAGE | 3" = 1'-0" | 14

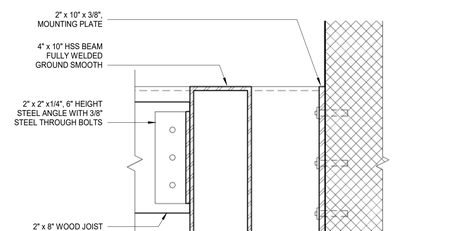

TRELLIS CONNECTION AT CMU WALL | 3" = 1'-0" | 10

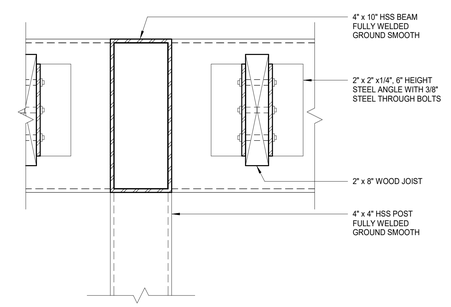

TRELLIS COLUMN AND BEAM DETAIL | 3" = 1'-0" | 6

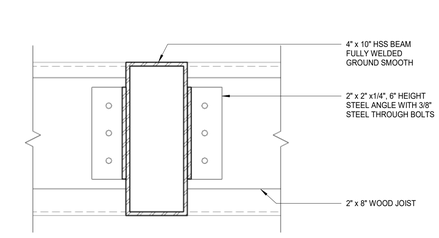

TRELLIS BEAM AND JOIST DETAIL | 3" = 1'-0" | 2

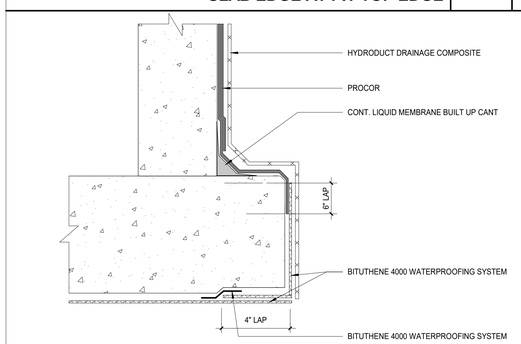

FOOTING TOE AT PIT WALL | 3/4" = 1'-0" | 17

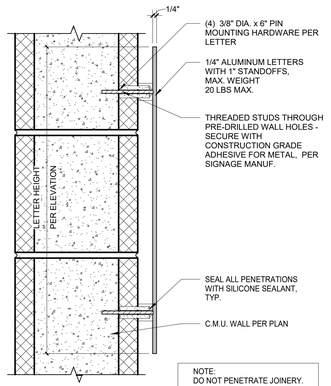

NOTE:
DO NOT PENETRATE JOINERY. LOCATE PENETRATIONS ACCORDINGLY

CMU WALL MOUNTED SIGNAGE | 3" = 1'-0" | 13

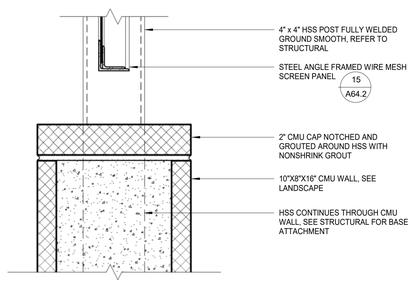

TRELLIS COLUMN AT LOW CMU WALL | 3" = 1'-0" | 9

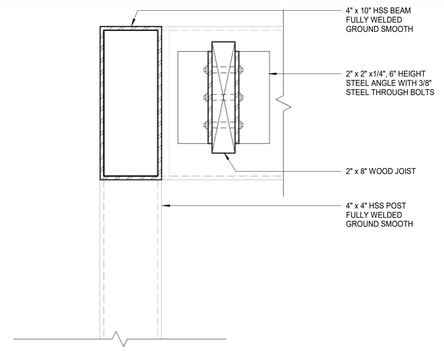

TRELLIS COLUMN BASE AT CMU WAL | 3" = 1'-0" | 5

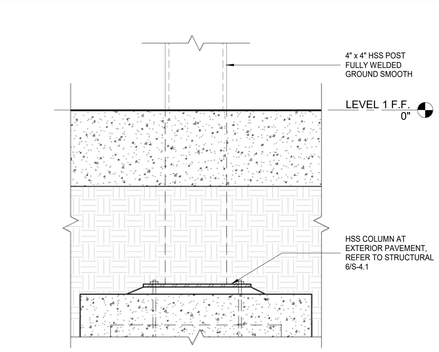

TRELLIS COLUMN BASE | 3" = 1'-0" | 1

CARDENA COMMUNITY AQUATICS AND SENIOR CENTER - CITY SUBMITTAL SET

PREPARED BY:
SVA ARCHITECTS
6 HUTTON CENTRE DR, SUITE 1150
SANTA ANA, CA 92707
T 949.809.3380 WWW.SVA-ARCHITECTS.COM

THIS DOCUMENT CONTAINS INFORMATION PROPRIETARY TO SVA ARCHITECTS INC. AND IS FURNISHED IN CONFIDENCE FOR THE LIMITED PURPOSE OF EVALUATION, BIDDING OR REVIEW. THE INFORMATION CONTAINED HEREIN SHALL NOT BE USED FOR ANY OTHER PURPOSE AND SHALL NOT BE REPRODUCED OR DISCLOSED TO OTHERS WITHOUT THE PRIOR WRITTEN CONSENT OF SVA ARCHITECTS INC. ALL RIGHTS RESERVED, © COPYRIGHT 2018.

LICENSED ARCHITECT ROBERT M. SIMONIAN No. C-13001 JAN. 31, 2025 STATE OF CALIFORNIA

REVISIONS

NO.	DESCRIPTION	DATE	APPROVED
1	90% CD SUBMITTAL	12/15/2022	
2	100% CD SUBMITTAL	05/01/2023	
3	FINAL SUBMITTAL	06/30/2023	

B.M.: THE CITY OF GARDENA BENCHMARK NO. SD-15
ELEV. = 43.508'

CITY OF GARDENA
DEPARTMENT OF PUBLIC WORKS - ENGINEERING

TRELLIS, FENCE AND MISC. DETAILS

COMMUNITY AQUATICS & SENIOR CENTER

A64.2

	INITIAL	DATE
DESIGNED BY	AP/EC	05/25/2022
DRAWN BY	NC	06/20/23
CHECKED BY	DB	06/29/23

APPROVED BY:
APPROVED BY: DIRECTOR OF PUBLIC WORKS

SHT. 80 OF 195 DWG. NO. 5-2606

PLOT DATE: 11/30/2023 9:33:33 AM
PLOT NAME: C:\Users\dbrandt\Documents\Gardena Community Pool and Senior Center_dbrandt@sva-architects.com.rvt

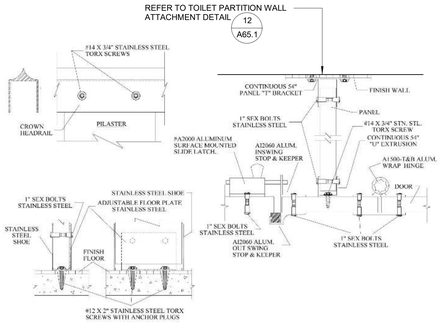

TOILET PARTITION BOTTOM ATTACHMENT | 6" = 1'-0" | 15

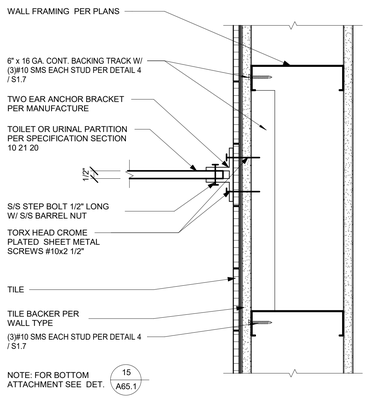

TOILET PARTITION WALL ATTACHMENT | 3" = 1'-0" | 12

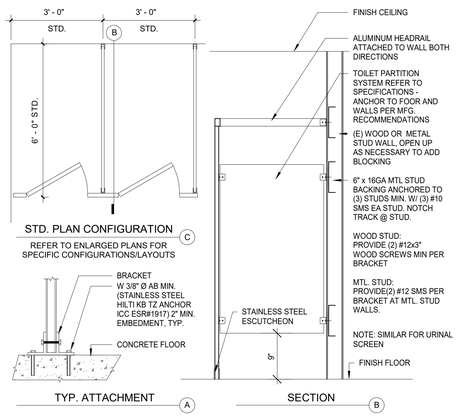

TOILET PARTITION OVERHEAD BRACED | 1" = 1'-0" | 9

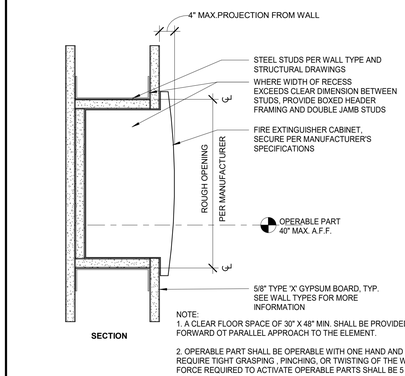

NOTE:
1. A CLEAR FLOOR SPACE OF 30" X 48" MIN. SHALL BE PROVIDED FOR EITHER FORWARD OT PARALLEL APPROACH TO THE ELEMENT.

2. OPERABLE PART SHALL BE OPERABLE WITH ONE HAND AND SHALL NOT REQUIRE TIGHT GRASPING , PINCHING, OR TWISTING OF THE WRIST. THE FORCE REQUIRED TO ACTIVATE OPERABLE PARTS SHALL BE 5 POUNDS MAX.

SEMI RECESSED F.E. CABINET | 3" = 1'-0" | 6

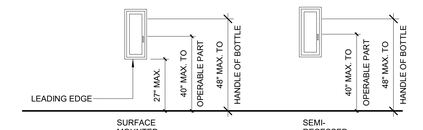

SURFACE MOUNTED CABINETS THAT PROTRUDE 4" OR MORE INTO AN ACCESSIBLE PATH OF TRAVEL TO HAVE LEADING EDGE NO MORE THAN 27" A.F.F. PER CBC 11B-307.2

SEE DETAIL 6 / A65.1 FOR SEMI RECESSED CABINET DETAIL

FIRE EXTINGUISHER CABINET | 3/8" = 1'-0" | 3

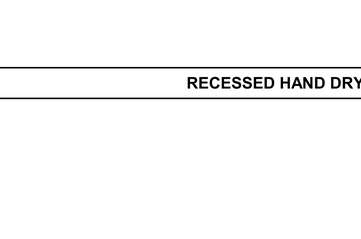

BENCH DETAIL | 1 : 1 | 14

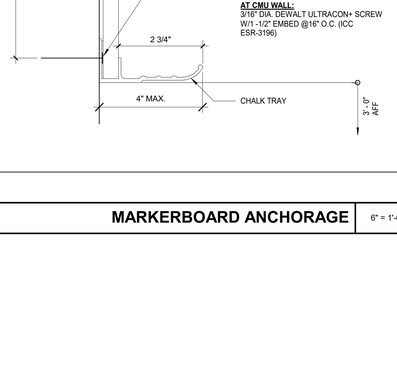

ACCESSIBLE BENCH DETAIL | 1 : 1 | 11

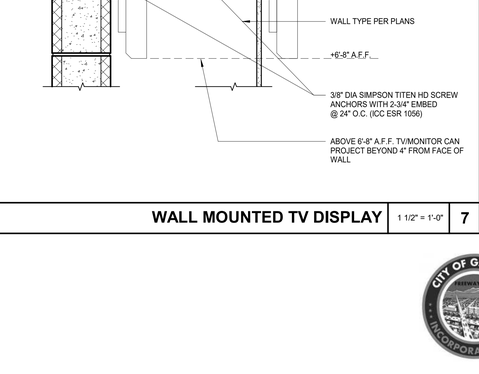

NOTE: HANDLE, COAT HOOK AND LOCK ELEMENTS SHALL BE ACCESSIBLE, @48" MAX. A.F.F.

LOCKER ELEVATION | 3/4" = 1'-0" | 8

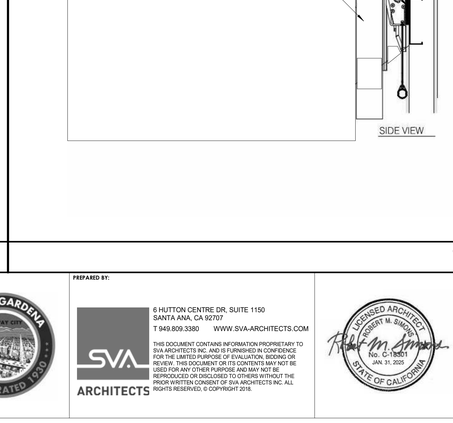

NOTE:
HANDLES AND LOCKS ON THE ACCESSIBLE LOCKERS SHALL BE OPERABLE WITH ONE HAND AND SHALL NOT REQUIRE TIGHT GRASPING , PINCHING, OR TWISTING OF THE WRIST. THE FORCE REQUIRED TO ACTIVATE OPERABLE PARTS SHALL BE 5 POUNDS MAX.

LOCKERS @ MTL STUD | 3/4" = 1'-0" | 5

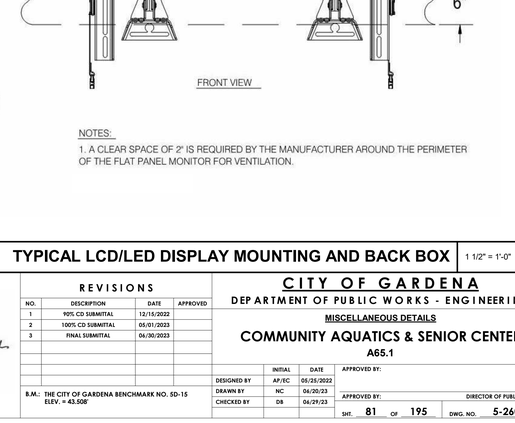

NOTE:
HANDLES AND LOCKS ON THE ACCESSIBLE LOCKERS SHALL BE OPERABLE WITH ONE HAND AND SHALL NOT REQUIRE TIGHT GRASPING, PINCHING, OR TWISTING OF THE WRIST. THE FORCE REQUIRED TO ACTIVATE OPERABLE PARTS SHALL BE 5 POUNDS MAX.

LOCKERS @ CMU | 3/4" = 1'-0" | 2

RECESSED HAND DRYER | 1 1/2" = 1'-0" | 13

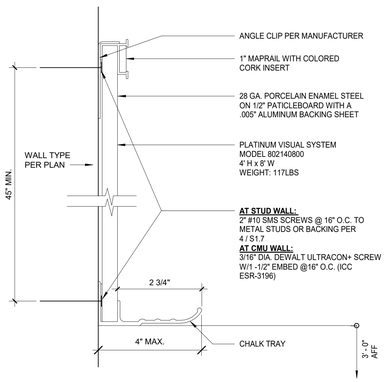

MARKERBOARD ANCHORAGE | 6" = 1'-0" | 10

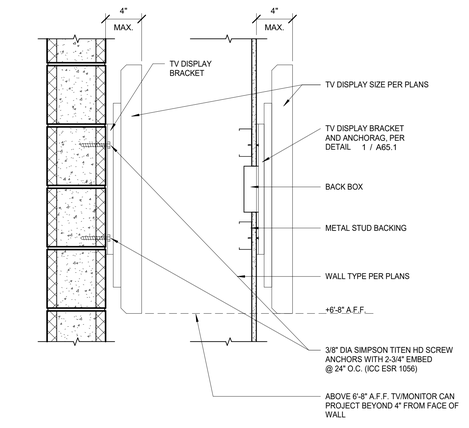

WALL MOUNTED TV DISPLAY | 1 1/2" = 1'-0" | 7

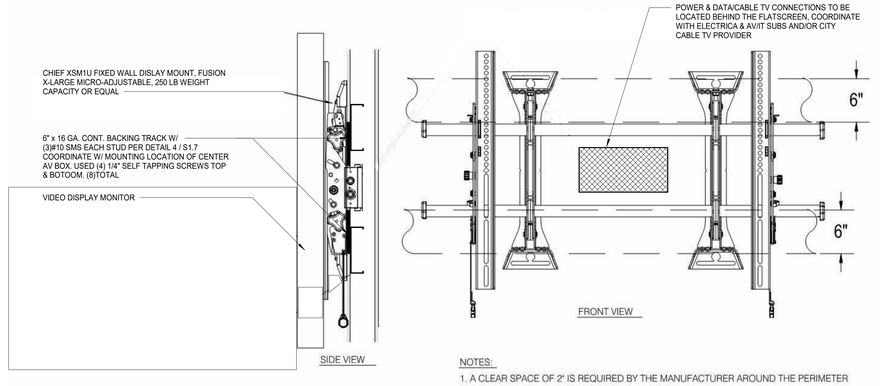

NOTES:
1. A CLEAR SPACE OF 2" IS REQUIRED BY THE MANUFACTURER AROUND THE PERIMETER OF THE FLAT PANEL MONITOR FOR VENTILATION.

TYPICAL LCD/LED DISPLAY MOUNTING AND BACK BOX | 1 1/2" = 1'-0" | 1

PREPARED BY:
SVA ARCHITECTS
6 HUTTON CENTRE DR, SUITE 1150
SANTA ANA, CA 92707
T 949.809.3380 WWW.SVA-ARCHITECTS.COM

THIS DOCUMENT CONTAINS INFORMATION PROPRIETARY TO SVA ARCHITECTS INC. AND IS FURNISHED IN CONFIDENCE FOR THE LIMITED PURPOSE OF EVALUATION, BIDDING OR REVIEW. THIS DOCUMENT OR ITS CONTENTS MAY NOT BE USED FOR ANY OTHER PURPOSE AND MAY NOT BE REPRODUCED OR DISCLOSED TO OTHERS WITHOUT THE PRIOR WRITTEN CONSENT OF SVA ARCHITECTS INC. ALL RIGHTS RESERVED. © COPYRIGHT 2016.

LICENSED ARCHITECT ROBERT M. SIMMS No. C-18801 JAN. 31, 2025 STATE OF CALIFORNIA

REVISIONS

NO.	DESCRIPTION	DATE	APPROVED
1	90% CD SUBMITTAL	12/15/2022	
2	100% CD SUBMITTAL	05/01/2023	
3	FINAL SUBMITTAL	06/30/2023	

B.M.: THE CITY OF GARDENA BENCHMARK NO. SD-15 ELEV. = 43.508'

CITY OF GARDENA
DEPARTMENT OF PUBLIC WORKS - ENGINEERING

MISCELLANEOUS DETAILS

COMMUNITY AQUATICS & SENIOR CENTER

A65.1

	INITIAL	DATE	APPROVED BY:
DESIGNED BY	AP/EC	06/26/2022	
DRAWN BY	NC	06/20/23	
CHECKED BY	DB	06/29/23	APPROVED BY: DIRECTOR OF PUBLIC WORKS

SHT. 81 OF 195 DWG. NO. 5-2606

CARDINA COMMUNITY AQUATICS AND SENIOR CENTER - CITY SUBMITTAL SET

PLOT DATE: 6/30/2023 2:31:26 PM
PLOT BY: Nicholas Cruz
FILE NAME: C:\Users\ncruz\Documents\Gardena Community Pool and Senior Center_ddcwork\a-sa-files\a-cad.rvt

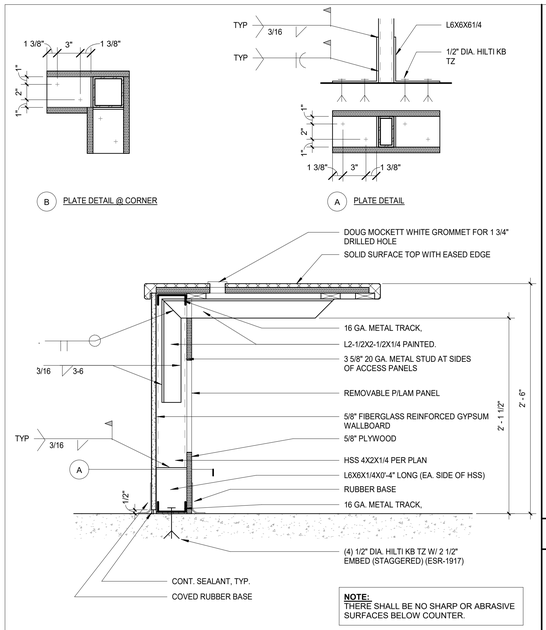

NOTE:
THERE SHALL BE NO SHARP OR ABRASIVE SURFACES BELOW COUNTER.

RECEPTION COUNTER (WORKSTATION) | 1 1/2" = 1'-0" | 15

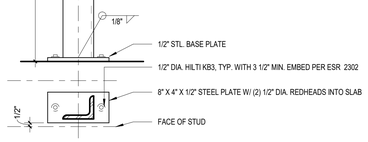

LAV COUNTER SUPPORT | 1 1/2" = 1'-0" | 14

* FIRE TREATED WOOD REQUIRED PER CBC 603 FOR WOOD BLOCKING

LAVATORY COUNTERTOP | 1 1/2" = 1'-0" | 10

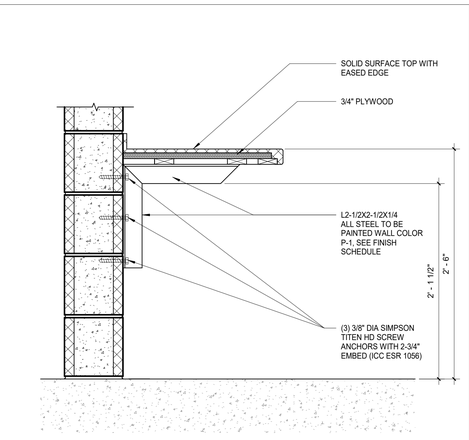

NOTE:
THERE SHALL BE NO SHARP OR ABRASIVE SURFACES BELOW COUNTER.
SEE DETAIL 3/- FOR ANCHORAGE, TYP.

COUNTER AT CMU | 1 1/2" = 1'-0" | 12

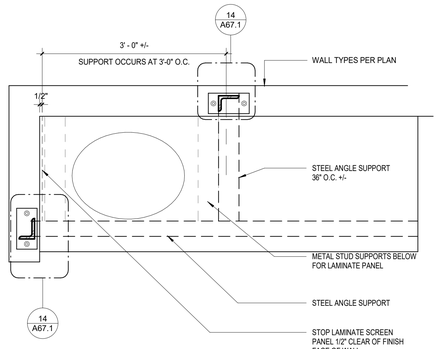

LAVATORY SUPPORT LAYOUT | 1" = 1'-0" | 11

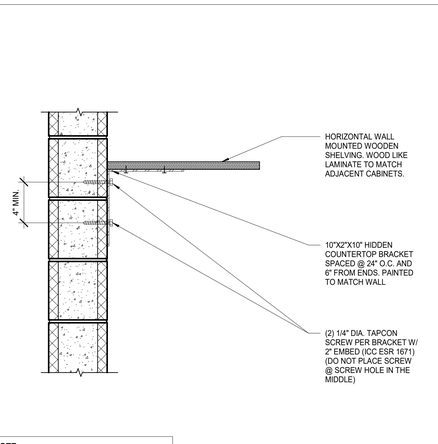

NOTE:
THERE SHALL BE NO SHARP OR ABRASIVE SURFACES BELOW COUNTER.

SHELF AT CMU | 1 1/2" = 1'-0" | 9

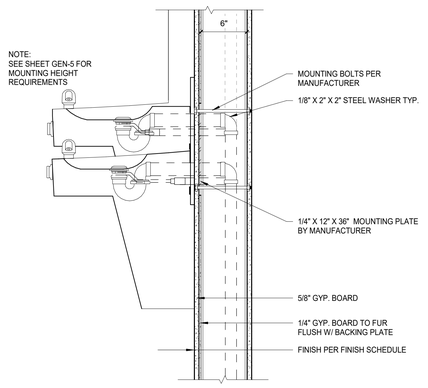

DRINKING FOUNTAIN ATTACHMENT | 1 1/2" = 1'-0" | 8

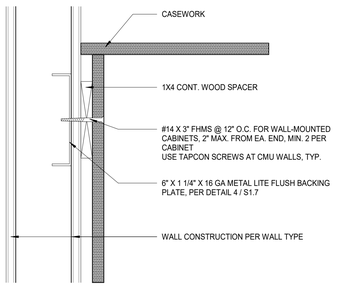

TYP. ANCHORAGE @ WALL | 3" = 1'-0" | 7

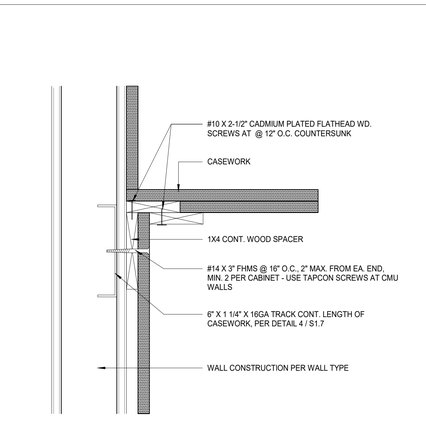

MID ANCHORAGE @ WALL | 3" = 1'-0" | 6

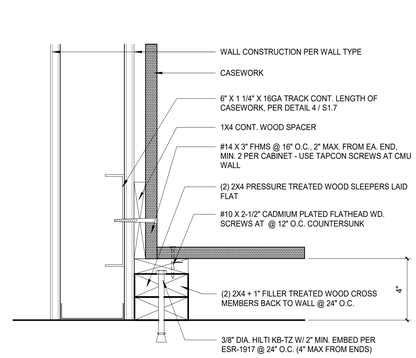

BASE ANCHORAGE @ WALL | 3" = 1'-0" | 5

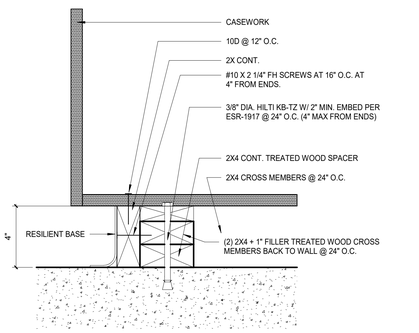

BASE ANCHORAGE @ FRONT | 3" = 1'-0" | 4

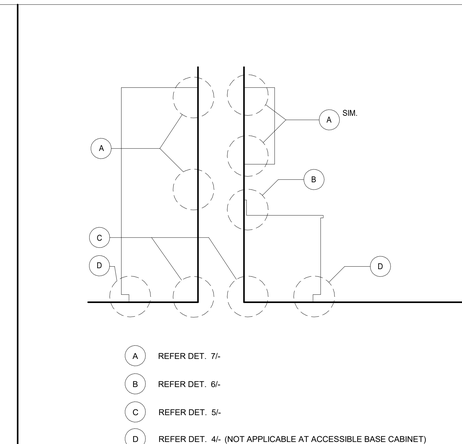

TYPICAL ANCHORAGE | 1/2" = 1'-0" | 3

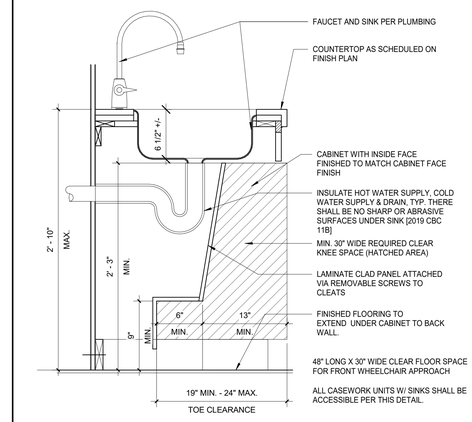

ACCESSIBLE CASEWORK | 1 1/2" = 1'-0" | 2

CASEWORK NOTES

1. CASEWORK SHALL COMPLY W/ THE REQUIREMENTS OF THE WOODWORK INSTITUTE.
2. ALL CABINET DIMENSIONS INDICATED ARE NOMINAL OUTSIDE DIMENSIONS.
3. FILLER STRIPS ARE REQUIRED AT ENDS OF CABINETS WHERE CABINETS ARE ADJACENT TO WALLS.
4. ALL FILLER STRIPS AT TALL AND WALL CABINETS TO HAVE TOP AND BOTTOM RETURNS.
5. ALL PLAN DIMENSIONS OF CASEWORK ARE CABINET DIMENSIONS ONLY AND DO NOT INCLUDE TOPS.
6. PROVIDE FINISHED END PANELS FOR SUPPORT OF COUNTERTOPS AT UNDERCOUNTER EQUIPMENT OR KNEE SPACES WHERE THERE IS NO ADJACENT WALL OR CABINET THAT CAN BE USE FOR SUPPORT.
7. FINISH ALL EXPOSED PORTIONS OF CASEWORK AND COUNTERTOPS.
8. ALL UNITS, INCLUDING OPEN UNITS, SHALL HAVE CASEWORK MANUFACTURER'S STANDARD CABINET LINER UNLESS OTHERWISE NOTED.
9. ALL TOE SPACES SHALL BE 4" IN HEIGHT AND 3" IN DEPTH AND SHALL RETURN TO WALL WHERE ENDS OF CABINETS ARE EXPOSED.
10. ALL SHELVING SHALL BE ADJUSTABLE UNLESS OTHERWISE NOTED.
11. ALL COUNTERTOPS SHALL BE OF MAXIMUM PRACTICAL LENGTHS REQUIRED TO CONFORM TO OVERALL BASE CABINET DIMENIONS.
12. PROVIDE BACKSPLASH COUNTERTOP RETURN AT ENDS OF COUNTERTOPS WHERE ADJACENT TO WALL OR OTHER FULL HEIGHT CASEWORK.
13. ALL SINKS, SINK TRIM & ELECTRICAL ITEMS SHALL BE FURNISHED BY OTHER THAN THE CASEWORK MANUFACTURER UNLESS OTHERWISE NOTED.
14. ALL OTHER COUNTERTOPS SHALL BE PLASTIC LAMINATE UNLESS OTHERWISE NOTED.
15. ALL W.I. CASEWORK TO BE FACE FRAME MODEL.

PREPARED BY:
SVA ARCHITECTS
6 HUTTON CENTRE DR, SUITE 1150
SANTA ANA, CA 92707
T 949.809.3380 WWW.SVA-ARCHITECTS.COM

THIS DOCUMENT CONTAINS INFORMATION PROPRIETARY TO SVA ARCHITECTS INC. AND IS FURNISHED IN CONFIDENCE FOR THE LIMITED PURPOSE OF EVALUATION, BIDDING OR REVIEW. THIS DOCUMENT OR ITS CONTENTS MAY NOT BE USED FOR ANY OTHER PURPOSE AND MAY NOT BE REPRODUCED OR DISCLOSED TO OTHERS WITHOUT THE PRIOR WRITTEN CONSENT OF SVA ARCHITECTS INC. ALL RIGHTS RESERVED. © COPYRIGHT 2016.

LICENSED ARCHITECT ROBERT M. SIMPSON No. C-18001 JAN. 31, 2025 STATE OF CALIFORNIA

REVISIONS

NO.	DESCRIPTION	DATE	APPROVED
1	90% CD SUBMITTAL	12/15/2022	
2	100% CD SUBMITTAL	05/01/2023	
3	FINAL SUBMITTAL	06/30/2023	

B.M.: THE CITY OF GARDENA BENCHMARK NO. SD-15
ELEV. = 43.508'

CITY OF GARDENA
DEPARTMENT OF PUBLIC WORKS - ENGINEERING

DETAILS CASEWORK & MISC.

COMMUNITY AQUATICS & SENIOR CENTER

A67.1

	INITIAL	DATE
DESIGNED BY	AP/EC	05/25/2022
DRAWN BY	NC	06/20/23
CHECKED BY	DB	06/29/23

APPROVED BY:

APPROVED BY: DIRECTOR OF PUBLIC WORKS

SHT. 82 OF 195 DWG. NO. 5-2606

CARDENA COMMUNITY AQUATICS AND SENIOR CENTER - CITY SUBMITTAL SET

PLOT DATE: 6/13/2023 8:01:33 AM
PLOT NAME: G:\Shared\Projects\Gardena Community Pool and Senior Center_docs\arch\sva-Sht\A-6.2.dwg

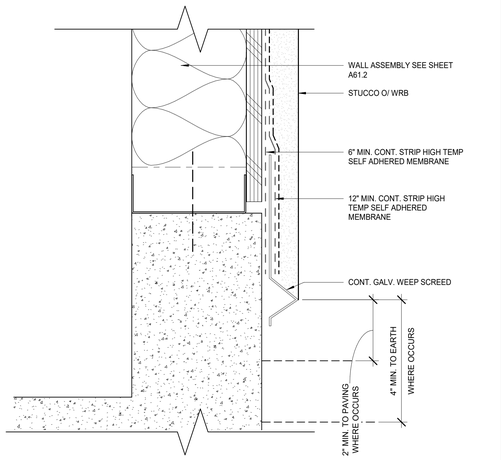

EXTERIOR TYP. SCREED | 6" = 1'-0" | 15

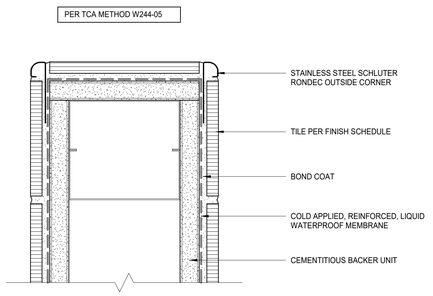

TILED WALL END | 6" = 1'-0" | 12

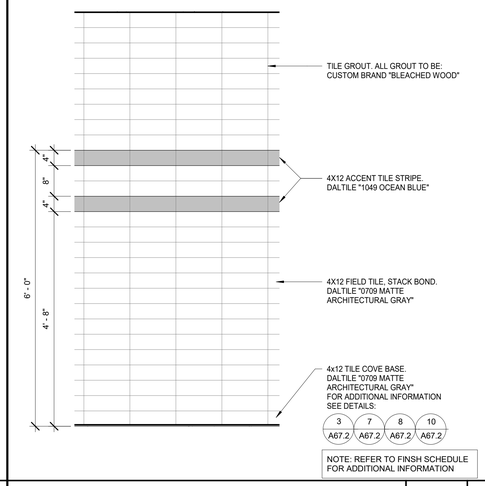

TILE PATTERN DETAIL | 3/4" = 1'-0" | 9

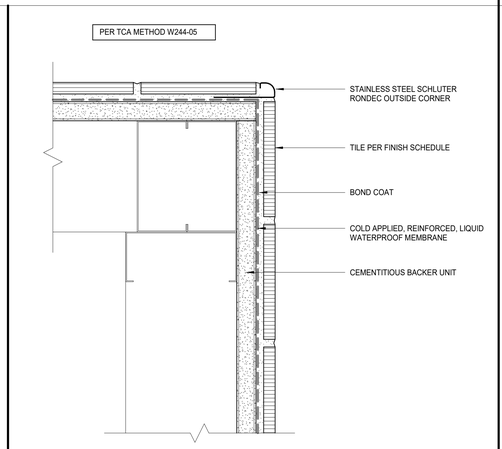

TILED WALL CORNER | 6" = 1'-0" | 6

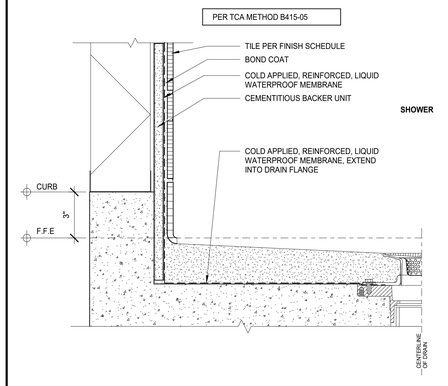

SHOWER TILE BASE | 3" = 1'-0" | 3

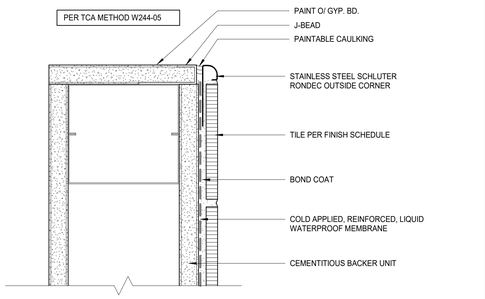

TILE TERMINATION ON OUTSIDE CORNER | 6" = 1'-0" | 14

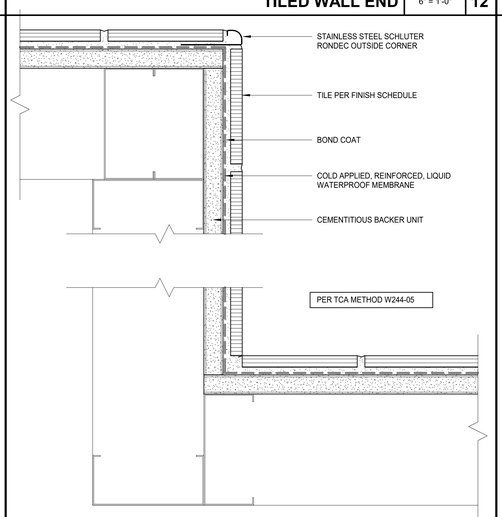

TILED INSIDE CORNER WALL | 6" = 1'-0" | 11

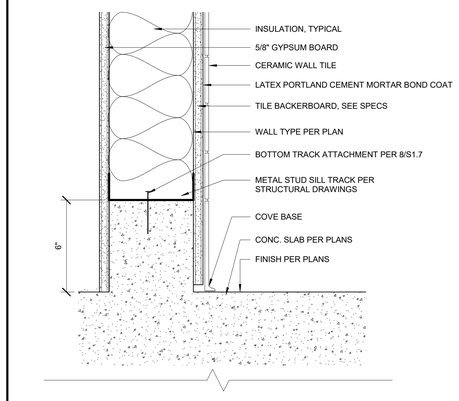

TILE WALL BOTTOM TRACK | 3" = 1'-0" | 8

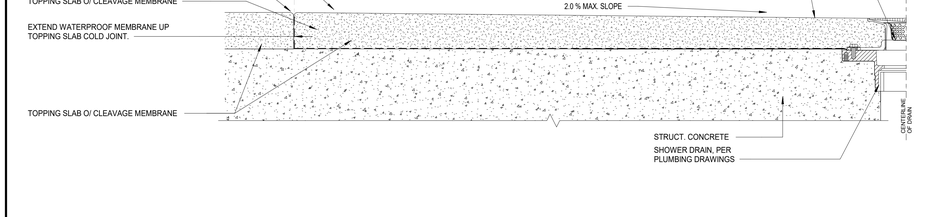

CURBLESS SHOWER EDGE @ ACCESSIBLE SHWRS. | 3" = 1'-0" | 2

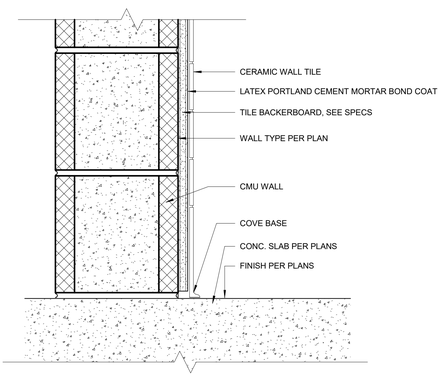

TILE WALL BASE AT CMU | 3" = 1'-0" | 10

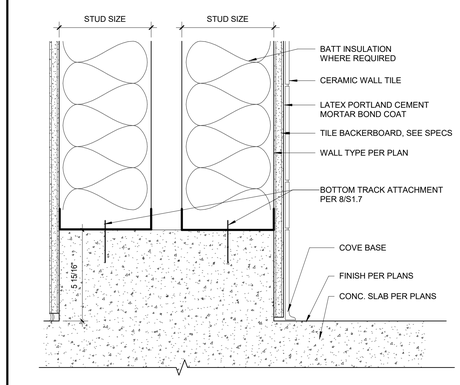

PLUMBING WALL BOTTOM TRACK | 3" = 1'-0" | 7

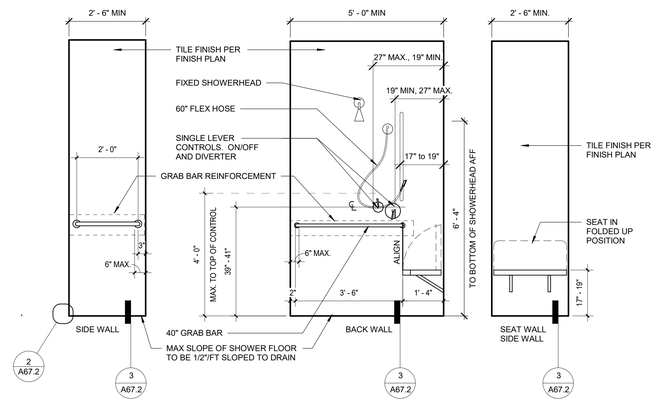

ACCESSIBLE SHOWER INTERIOR ELEVATIONS | 1/2" = 1'-0" | 1

CARDENA COMMUNITY AQUATICS AND SENIOR CENTER - CITY SUBMITTAL SET

CITY OF GARDENA · FREEWAY CITY · INCORPORATED 1930

PREPARED BY:
SVA ARCHITECTS
6 HUTTON CENTRE DR, SUITE 1150
SANTA ANA, CA 92707
T 949.809.3380 WWW.SVA-ARCHITECTS.COM

THIS DOCUMENT CONTAINS INFORMATION PROPRIETARY TO SVA ARCHITECTS INC. AND IS FURNISHED IN CONFIDENCE FOR THE LIMITED PURPOSE OF EVALUATION, BIDDING OR REVIEW. THIS DOCUMENT OR ITS CONTENTS MAY NOT BE USED FOR ANY OTHER PURPOSE AND MAY NOT BE REPRODUCED OR DISCLOSED TO OTHERS WITHOUT THE PRIOR WRITTEN CONSENT OF SVA ARCHITECTS INC. ALL RIGHTS RESERVED. © COPYRIGHT 2015.

LICENSED ARCHITECT · ROBERT M. SIMMONS · No. C-18001 · JAN 31, 2025 · STATE OF CALIFORNIA

REVISIONS

NO.	DESCRIPTION	DATE	APPROVED
1	90% CD SUBMITTAL	12/15/2022	
2	100% CD SUBMITTAL	05/01/2023	
3	FINAL SUBMITTAL	06/30/2023	

B.M.: THE CITY OF GARDENA BENCHMARK NO. SD-15 ELEV. = 43.508'

CITY OF GARDENA
DEPARTMENT OF PUBLIC WORKS - ENGINEERING

TILE DETAILS

COMMUNITY AQUATICS & SENIOR CENTER

A67.2

	INITIAL	DATE
DESIGNED BY	AF/EC	05/25/2022
DRAWN BY	NC	06/20/23
CHECKED BY	DB	06/29/23

APPROVED BY:

APPROVED BY: DIRECTOR OF PUBLIC WORKS

SHT. 83 OF 195 DWG. NO. 5-2606

PLOT DATE: 6/30/2023 9:31:23 AM
PLOT BY: Dustin Nguyen
FILE NAME: G:\Projects\2015\15-034 - Gardena Community Pool and Senior Center_dbox-admin\z-archive\A-tiles.rvt

GENERAL NOTES:

1. DETAILS OF CONSTRUCTION NOT SHOWN SHALL BE OF SAME NATURE AS THOSE SHOWN FOR SIMILAR CONDITIONS. REFER TO THE TYPICAL DETAIL SHEETS FOR TYPICAL DETAILS OF CONSTRUCTION. TYPICAL DETAILS APPLY TO ALL CONSTRUCTION UNLESS SPECIFICALLY NOTED OR SHOWN OTHERWISE. WHERE CONDITIONS REQUIRE MODIFICATIONS OF A TYPICAL DETAIL, THE CONTRACTOR SHALL SUBMIT MODIFIED DETAIL OR APPROVAL BY THE ENGINEER OF RECORD PRIOR TO FABRICATION AND INSTALLATION. DETAILS OF CONSTRUCTION NOT SHOWN SHALL BE OF SAME NATURE AS THOSE SHOWN FOR SIMILAR CONSTRUCTION.
2. CONTRACTOR SHALL CONSIDER THE PROJECT SPECIFICATIONS A PART OF THE CONTRACT DOCUMENTS. WHERE INFORMATION IS CONFLICTING, SPECIFIC DETAILS SHALL GOVERN OVER TYPICAL DETAILS WHICH SHALL GOVERN OVER THESE NOTES WHICH SHALL GOVERN OVER SPECIFICATIONS.
3. ALL DIMENSIONS ON STRUCTURAL DRAWINGS SHALL BE CHECKED AGAINST ARCHITECTURAL DIMENSIONS. DO NOT SCALE DRAWINGS. IF DIMENSIONS ARE OMITTED OR NOT CLEAR, CONTACT THE ARCHITECT (ARCH) OR STRUCTURAL ENGINEER OF RECORD (SEOR). ALL DIMENSIONS RELATED TO EXISTING CONDITIONS SHALL BE FIELD VERIFIED BY THE CONTRACTOR. DIMENSIONS ARE TO THE FACE OF STUDS, AND TO CENTERLINE OF COLUMNS UNO.
4. IT IS THE CONTRACTOR'S RESPONSIBILITY TO IMMEDIATELY NOTIFY THE SEOR OF ANY CONFLICTS BETWEEN THE STRUCTURAL DRAWINGS AND OTHER DRAWINGS; OR EXISTING CONDITIONS NOT SHOWN OR DIFFERENT FROM THOSE SHOWN ON DRAWINGS PRIOR TO COMMENCEMENT OF WORK. THE CONTRACTOR IS NOT TO ORDER MATERIAL OR CONSTRUCT ANY PORTION OF THE BUILDING THAT IS IN CONFLICT UNTIL THE CONFLICT IS RESOLVED WITH THE AFFECTED PARTIES.
5. THE STRUCTURAL DRAWINGS AND SPECIFICATIONS REPRESENT THE FINISHED STRUCTURE. UNLESS OTHERWISE SHOWN THEY DO NOT INDICATE METHOD OF CONSTRUCTION. THE CONTRACTOR SHALL PROVIDE ALL MEASURES NECESSARY TO PROTECT THE CONSTRUCTION AND ALL ADJACENT PROPERTIES DURING CONSTRUCTION. SUCH MEASURES SHALL INCLUDE BUT ARE NOT LIMITED TO BRACING, SHORING OF LOADS DUE TO CONSTRUCTION EQUIPMENT, ETC. OBSERVATION VISITS TO THE SITE BY THE ARCHITECT OR SEOR SHALL NOT INCLUDE OBSERVATION OF THE ABOVE ITEMS.
6. SUBSTITUTION REQUESTS FOR MATERIALS SPECIFIED ON THE STRUCTURAL DRAWINGS MAY BE CONSIDERED WITH MATERIALS HAVING EQUIVALENT OR GREATER CAPACITY AND PERFORMANCE. CURRENT EVALUATION REPORTS AND PRODUCT INFORMATION SHALL BE PROVIDED TO THE STRUCTURAL ENGINEER DEMONSTRATING THE REQUIRED CAPACITY AND PERFORMANCE OF THE MATERIAL TO BE SUBSTITUTED. WRITTEN APPROVAL FROM THE SEOR SHALL BE OBTAINED PRIOR TO THE SUBSTITUTION OF ANY MATERIAL SPECIFIED ON THE STRUCTURAL DOCUMENTS.
7. IT IS THE CONTRACTOR'S RESPONSIBILITY TO COMPLY WITH THE PERTINENT SECTIONS OF THE "CONSTRUCTION SAFETY ORDERS" ISSUED BY THE STATE OF CALIFORNIA, LATEST EDITION, AND ALL OSHA REQUIREMENTS AS THEY APPLY TO THIS PROJECT. THE ARCHITECT, SEOR, AND THE OWNER DO NOT ACCEPT ANY RESPONSIBILITY FOR THE CONTRACTOR'S FAILURE TO COMPLY WITH THESE REQUIREMENTS.
8. ALL WORK IS NEW (N) UNLESS INDICATED AS EXISTING (E).
9. CONSTRUCTION MATERIALS SHALL BE DISTRIBUTED WHEN PLACED ON THE STRUCTURE SUCH THAT LOADS DO NOT EXCEED DESIGN LIVE LOADS OR RESULT IN AN UNBALANCED CONDITION.
10. REFER TO THE PROJECT SPECIFICATIONS FOR SHOP DRAWING REQUIREMENTS AND SUBMITTALS.

STRUCTURAL DESIGN CRITERIA:

1. CODES:
   ALL WORK SHALL BE IN CONFORMANCE WITH THE CALIFORNIA BUILDING CODE (CBC) 2019 EDITION, INCLUDING ALL AMENDMENTS. ALL STANDARDS USED SHALL BE THE LATEST VERSION APPROVED BY THE CODE ENFORCEMENT AGENCY ON THE DATE OF THE PERMIT ISSUANCE UNLESS SPECIFICALLY NOTED OTHERWISE.
2. DESIGN LIVE LOAD

	LOAD
ROOF	20 PSF
FLOOR	80 PSF

3. WIND DESIGN INFORMATION

RISK CATEGORY = III	Kz = 0.98	Kd =0.85	Kzt = 1.0
BASIC WIND SPEED Vfm = 94 MPH (3 SEC GUST)			EXPOSURE = C
INTERNAL PRESSURE COEFF. = +/- 0.18			

4. SEISMIC DESIGN INFORMATION

I = 1.25	RISK CATEGORY = III			SITE CLASS = D	
S_S = 1.795	S1 = 0.636	SDS = 1.196	SD1 = 1.196		
SEISMIC DESIGN CATEGORY = D					
ANALYSIS PROCEDURE = EQUIV. LATERAL FORCE PROCEDURE OR LINEAR DYNAMIC PROCEDURE (RESPONSE SPECTRUM)					
BUILDING	SLRS : A7: SPECIAL REINF. MASONRY SHEAR WALLS				
	Rho = 1.3	R = 5	Cd = 3.5	Ω = 2.5	Cs = 0.30
CANOPY	SLRS : G2: SPECIAL STEEL CANTILEVER COLUMN				
	Rho = 1.0	R = 2.5	Cd = 2.5	Ω = 1.25	Cs = 0.6

5. RAIN INTENSITY
   (PER NOAA ATLAS 14 POINT PRECIPITATION FREQUENCY ESTIMATES)

   PRIMARY DRAINAGE: 60 MIN DURATION/100YR RETURN PERIOD: 1.50 IN /HOUR
   SECONDARY DRAINAGE: 15 MIN DURATION/100YR RETURN PERIOD: 3.09 IN /HOUR

EXISTING UNDERGROUND UTILITY NOTES:

1. THE ARCHITECT AND ENGINEERS ARE NOT RESPONSIBLE FOR THE LOCATIONS OF EXISTING UNDERGROUND UTILITIES WHETHER OR NOT SHOWN ON THE DRAWINGS. THE LOCATION OF ANY EXISTING UNDERGROUND UTILITIES SHOWN ON THE DRAWINGS ARE APPROXIMATE. THE CONTRACTOR SHALL IMMEDIATELY NOTIFY THE OWNER SHOULD ANY SUCH UNIDENTIFIED CONDITIONS BE DISCOVERED.
2. THE CONTRACTOR SHALL BE RESPONSIBLE FOR ANY DAMAGES WHICH MAY RESULT FROM HIS FAILURE TO EXACTLY LOCATE AND PRESERVE ALL EXISTING UNDERGROUND UTILITIES.

CONTRACTOR RESPONSIBILITY NOTE:

1. EACH CONTRACTOR RESPONSIBLE FOR THE CONSTRUCTION OF A MAIN LATERAL-FORCE-RESISTING SYSTEM, DESIGNATED ON PLANS SHALL SUBMIT A WRITTEN STATEMENT OF RESPONSIBILITY TO THE BUILDING OFFICIAL AND THE OWNER PRIOR TO THE COMMENCEMENT OF WORK ON THE SYSTEM OR COMPONENT. THE CONTRACTOR'S STATEMENT OF RESPONSIBILITY SHALL CONTAIN THE FOLLOWING:

   A. ACKNOWLEDGMENT OF AWARENESS OF THE SPECIAL REQUIREMENTS.

   B. ACKNOWLEDGMENT THAT CONTROL WILL BE EXERCISED TO OBTAIN CONFORMANCE WITH THE CONSTRUCTION DOCUMENTS APPROVED BY THE BUILDING OFFICIAL.

   C. PROCEDURES FOR EXERCISING CONTROL WITHIN THE CONTRACTOR'S ORGANIZATION, THE METHOD AND FREQUENCY OF REPORTING AND THE DISTRIBUTION OF THE REPORTS.

   D. IDENTIFICATION AND QUALIFICATIONS OF THE PERSON(S) EXERCISING SUCH CONTROL AND THEIR POSITION(S) IN THE ORGANIZATION.

FOUNDATION AND SLAB ON GRADE NOTES:

1. SEE SOIL REPORT BY: SOUTHERN CALIFORNIA GEOTECHNICAL
   REPORT NO.: 21G242-1 DATED: 11/18/2021

   SOILS REPORT SHALL BE CONSIDER A PART OF THESE CONSTRUCTION DOCUMENTS.
2. ALLOWABLE FTG VERTICAL BEARING PRESSURE
   DEAD LOAD + LIVE LOAD = ...2500 PSF
   DEAD LOAD + LIVE LOAD + LATERAL LOAD = ...3325 PSF

   FOR BUILDINGS LOCATED WITHIN 5FT OF PROPERTY LINE.....1500 PSF

   ALLOWABLE FTG LATERAL BEARING PRESSURE IS 250 PSF PER FT OF DEPTH
   ALLOWABLE FTG COEFFICIENT OF FRICTION FOR SLIDING: 0.25
3. THE CONTRACTOR SHALL CONFORM TO ALL RECOMMENDATIONS AND CONDITIONS INDICATED IN THE SOIL REPORT. THE GEOTECHNICAL ENGINEER SHALL OBSERVE ALL FOOTING EXCAVATIONS PRIOR TO PLACING CONCRETE.
4. SUBSURFACE SOIL PREPARATION:
   A. ALL EXISTING UNDOCUMENTED FILL SHALL BE REMOVED AND RECOMPACTED. ALL TOPSOILS SHALL BE REMOVED AS REQUIRED BY THE GEOTECHNICAL ENGINEER
   B. GEOTECHNICAL ENGINEER SHALL BE RETAINED DURING THE OVEREXCAVATION PROCESS. THE ACTUAL DEPTH OF REMOVAL WILL BE DETERMINED DURING GRADING OPERATIONS.
   C. OFFSITE FILL MATERIAL SHALL BE APPROVED BY THE GEOTECHNICAL ENGINEER PRIOR TO PLACEMENT.
5. SPREAD FOOTINGS ARE CENTERED UNDER WALLS AND COLUMNS, UNO.
6. FOOTING ELEVATIONS ARE NOTED ON THE PLANS AND DETAILS . IN ANY CASE, FOOTINGS SHALL BEAR ON FIRM UNDISTURBED SOIL OR ENGINEERED FILL OR BEDROCK , IN ACCORDANCE WITH THE SOIL REPORT AND DETAILS SHOWN.
7. CONTRACTOR SHALL PROTECT ALL UTILITY LINES, ETC. ENCOUNTERED DURING EXCAVATION AND BACKFILLING.
8. FOOTING BACKFILL AND UTILITY TRENCH BACKFILL WITHIN BUILDING AREA SHALL BE MECHANICALLY COMPACTED IN LAYERS WITH THE APPROVAL OF THE GEOTECHNICAL ENGINEER. FLOODING IS NOT PERMITTED.
9. ALL TRENCHES SHALL COMPLY WITH APPLICABLE OSHA REQUIREMENTS.
10. ALL EXCAVATIONS SHALL BE PROPERLY BACKFILLED WITH NON-EXPANSIVE SOIL BUT NOT BEHIND RETAINING WALLS BEFORE CONCRETE OR MASONRY ATTAINS ITS FULL DESIGN STRENGTH.
11. THE DESIGN OF ALL RETAINING WALLS AND SUBTERRANEAN BUILDING WALLS INDICATED ON THESE DRAWINGS IS BASED ON DRAINED SOILS.
12. CONSTRUCTION JOINTS (CJ) AND SAWCUT (SC) JOINTS IN SLABS SHALL OCCUR WHERE LOCATED ON PLANS AND DETAILS. CJ'S SHALL HAVE FORMED POUR STOPS. CONSTRUCTION JOINTS IN WALLS AND FOOTINGS NEED NOT OCCUR AT THE SAME LOCATION, UNO.
13. SEE ARCHITECT'S PLANS FOR LOCATIONS OF SLAB SLOPES, DEPRESSIONS, CURBS, DRAINS, NON-STRUCTURAL PARTITIONS AND OTHER EMBEDDED ITEMS NOT SHOWN ON THE STRUCTURAL PLANS.
14. ALL GRADING, FOUNDATION FOOTINGS, AND DRAINAGE PLANS SHALL BE REVIEWED BY THE GEOTECHNICAL ENGINEER UPON SUBMITTAL. A CERTIFIED LETTER BY THE GEOTECHNICAL ENGINEER IS REQUESTED STATING THAT THE RECOMMENDATIONS CONTAINED WITHIN THE SOILS REPORT HAVE BEEN INCORPORATED INTO THE PROJECT PLANS AND SPECIFICATIONS PRIOR TO CONSTRUCTION.
15. PRIOR TO THE CONTRACTOR REQUESTING A BUILDING DEPARTMENT FOUNDATION INSPECTION, THE SOILS ENGINEER SHALL ADVISE THE BUILDING OFFICIAL IN WRITING THAT:
   A. THE BUILDING PAD WAS PREPARED IN ACCORDANCE WITH THE SOILS REPORT.
   B. THE UTILITY TRENCHES HAVE BEEN PROPERLY BACKFILLED AND COMPACTED.
   C. THE FOUNDATION EXCAVATIONS COMPLY WITH THE INTENT OF THE SOILS REPORT.
   D. GENERAL GRADING AND COMPACTION COMPLIES WITH THE SOILS REPORT.

SHORING AND EXCAVATIONS NOTES:

1. THE CONTRACTOR SHALL PROVIDE FOR THE DESIGN, APPROVALS, PERMITS, INSTALLATION AND MONITORING OF ALL TEMPORARY SHORING AND BRACING AS REQUIRED TO SUPPORT EXISTING FRAMING WHERE SUPPORT ELEMENTS (BEAMS, COLUMNS, AND BEARING WALLS) ARE TO BE REMOVED.
2. ALL WORK SHALL BE PERFORMED IN ACCORDANCE WITH THE LATEST EDITION OF THE CALIFORNIA CONSTRUCTION SAFETY ORDERS (CAL-OSHA).
3. TEMPORARY CUTS SHALL NOT EXCEED SLOPES RECOMMENDED IN THE SOIL REPORT, NOR THOSE SHOWN ON THE SHORING DRAWINGS FOR CONSTRUCTION OF FOUNDATIONS.
4. THE INSTALLATION OF SHORING AND EXCAVATIONS SHALL BE PERFORMED UNDER THE CONTINUOUS INSPECTION AND APPROVAL OF THE GEOTECHNICAL ENGINEER.
5. THE DESIGN OF THE SHORING SYSTEM SHALL BE BASED UPON RECOMMENDATIONS CONTAINED IN THE SOIL REPORT. THE SHORING CONTRACTOR SHALL FAMILIARIZE HIMSELF WITH ALL DATA THEREIN AND SHALL KEEP A COPY OF THE REPORT AT THE JOB SITE AT ALL TIMES.
6. THE STRUCTURAL ENGINEER RESPONSIBLE FOR THE SHORING DESIGN (HEREAFTER CALLED THE SHORING ENGINEER) SHALL MAKE PERIODIC VISITS TO THE JOB SITE FOR THE PURPOSE OF OBSERVING THE INSTALLATION OF THE SHORING SYSTEM. OBSERVATIONS SHALL INCLUDE, BUT SHALL NOT BE LIMITED TO, THE FOLLOWING:

   A. PRIOR TO THE START OF INSTALLATION, MEET WITH THE GEOTECHNICAL ENGINEER AND SHORING CONTRACTOR TO REVIEW ALL ASPECTS OF THE DESIGN AND INSTALLATION OF THE SHORING.
   B. REVIEW OF CONDITIONS AT COMPLETION OF EXCAVATION. THE CONTRACTOR SHALL NOTIFY THE SHORING ENGINEER AT LEAST 48 HOURS PRIOR TO EACH OF THE ABOVE REQUIRED OBSERVATIONS.
7. CONTROL POINTS SHALL BE ESTABLISHED BY A LICENSED SURVEYOR TO MONITOR ANY HORIZONTAL AND VERTICAL MOVEMENTS OF THE SHORING. INITIAL READINGS SHALL BE SUBMITTED TO THE BUILDING OFFICIAL, AND WEEKLY DATA SHALL BE SUBMITTED AS EXCAVATION PROGRESSES AND THROUGHOUT THE CONSTRUCTION PERIOD. ADDITIONAL READINGS SHALL BE OBTAINED WHEN REQUESTED BY THE BUILDING OFFICIAL, SHORING ENGINEER OR GEOTECHNICAL ENGINEER. IF ANY HORIZONTAL OR VERTICAL MOVEMENT OCCURS, THE GEOTECHNICAL ENGINEER, THE SHORING ENGINEER AND THE STRUCTURAL ENGINEER SHALL EVALUATE SUCH MOVEMENT AND RECOMMEND CORRECTIVE MEASURES, IF NECESSARY BEFORE EXCAVATION IS CONTINUED.

REINFORCING STEEL NOTES:

1. REINFORCING GRADES FOR CONCRETE OR MASONRY:

ALL BARS EXCEPT THOSE TO BE WELDED	ASTM A615, GRADE 60
TIES AND STIRRUPS	ASTM A615, GRADE 60
WELDED WIRE FABRIC	ASTM A1064
ALL BARS TO BE WELDED	ASTM A706, GRADE 60
ALL BARS IN THE CONCRETE SHEARWALL INDICATED ON WALL ELEVATION INCLUDING SUPPORTING WALL FOOTING LONGITUDINAL BARS (WF), AND ALL GRADE BEAMS (GB)	A706, GRADE 60

2. MAINTAIN MINIMUM CONCRETE COVER FROM FACE OF CONCRETE TO EDGE OF ALL REINFORCEMENT AS FOLLOWS (U.N.O.):
   (SEE PLAN/ SECTION FOR CONCRETE W/ FIRE RATING.)

CONDITION	COVER
CONCRETE POURED AGAINST EARTH	3"
CONCRETE POURED IN FORMS AND EXPOSED TO WEATHER OR EARTH	
-#6 BARS AND LARGER	2"
-#5 BARS AND SMALLER	1 1/2"
INTERIOR COLUMNS AND BEAMS	1 1/2"
INTERIOR WALL FACES AND RAISED SLABS	1"
STRUCTURAL SLABS ON GRADE	
-FROM BOTTOM OF SLAB	2"
-FROM TOP OF SLAB	1 1/2"
OTHER CONCRETE NOT EXPOSED TO WEATHER OR EARTH FOR #11 BARS AND SMALLER	1"

   PROVIDE THE LARGEST COVER REQUIRED FOR ALL APPLICABLE CONDITIONS. WHERE #3 STIRRUPS OR TIES ARE USED, ENSURE THAT THE COVER FOR LONGITUDINAL BARS IS ADEQUATE.
3. REINFORCEMENT SHALL BE PLACED IN ACCORDANCE WITH THE CONCRETE REINFORCING STEEL INSTITUTE (CRSI) "MANUAL OF STANDARD PRACTICE". EACH REINFORCING BAR SHALL BE WIRED TO A CROSS BAR AT A MAXIMUM SPACING OF 24" O.C. PROVIDE ALL ACCESSORIES NECESSARY TO SUPPORT REINFORCING IN POSITIONS SHOWN ON THE PLANS.
4. SPLICES IN CONTINUOUS REINFORCEMENT AS USED IN WALLS, FOOTINGS, SLABS, ETC., SHALL HAVE A CLASS "B" LAP (1' - 6" MIN) AND THE SPLICES IN ADJACENT BARS SHALL BE NOT LESS THAN 5' - 0" APART. VERTICAL WALL BARS SHALL BE SPLICED AT OR NEAR FLOOR LINES. BARS MAY BE WIRED TOGETHER AT SPLICES OR LAPS EXCEPT FOR TOP REINFORCING OF BEAMS AND SLABS OR WHERE SPECIFICALLY DETAILED TO BE SEPARATED. WELDED WIRE FABRIC SHALL BE LAPPED 12" MINIMUM.
5. ALL DOWELS, ANCHOR BOLTS AND OTHER HARDWARE TO BE SET IN CONCRETE SHALL BE TIED IN PLACE PRIOR TO PLACEMENT OF CONCRETE. NO WET SETTING, STABBING, RODDING OR OTHER MOVEMENT OF EMBEDDED ITEMS SHALL BE PERFORMED DURING PLACEMENT OF CONCRETE.
6. BEND REINFORCING BARS COLD.
7. STEEL SHALL BE KEPT CLEAN AND FREE OF RUST.
8. DOWELS BETWEEN FOOTING AND WALLS OR COLUMNS SHALL BE THE SAME GRADE, SIZE AND SPACING AS THE MAIN REINFORCING U.N.O.
9. ALL BARS SHALL BE MARKED SO THEIR IDENTIFICATION CAN BE MADE WHEN THE FINAL IN PLACE INSPECTION IS MADE.
10. CHAIRS OR SPACERS FOR REINFORCING SHALL BE NON-FERROUS OR PLASTIC COATED WHEN RESTING ON EXPOSED SURFACES.

MASONRY NOTES:

1. MASONRY UNITS SHALL DEVELOP THE FOLLOWING MINIMUM 28 DAY PRISM COMPRESSIVE STRENGTHS IN ACCORDANCE WITH THE BUILDING CODE:

MINIMUM 28 DAY COMPRESSIVE STRENGTH			
LOCATION	fm	TYPE S MORTAR PER ASTM C270	GROUT PER CBC 2103A.3
ALL MASONRY U.N.O	2000 PSI	2000 PSI	2000 PSI

2. CONCRETE BLOCK SHALL CONFORM TO ASTM C90 MEDIUM WEIGHT. CLAY BRICK LOCK SHALL CONFORM TO ASTM C652
3. PRISM TEST SHALL BE PERFORMED FOR MASONRY WITH f'm OVER 2000 PSI FOR CBC 2105A.2
4. VERTICAL REINFORCING SHALL BE FULL HEIGHT OF WALL AND SHALL BE BRACED AT 6' - 8" MAXIMUM TO PREVENT MOVEMENT WHILE GROUTING.
5. HORIZONTAL REINFORCING SHALL BE IN BOND BEAM UNITS AND TIED SECURELY TO VERTICAL REINFORCING.
6. DOWELS, ANCHORS, AND OTHER EMBEDDED ITEMS SHALL BE TIED SECURELY IN PLACE TO PREVENT MOVEMENT WHILE GROUTING. WET SETTING OR STABBING IS NOT ALLOWED.
7. MAXIMUM GROUT LIFTS SHALL NOT EXCEED 8' - 0" AND CLEANOUTS AT THE BOTTOM OF ALL CELLS SHALL BE USED UNLESS THE LIFT IS 4' - 0" OR LESS. THE CLEANOUTS SHALL BE SEALED BEFORE GROUTING. GROUT FOR EACH POUR SHALL BE STOPPED 1 1/2" BELOW THE TOP OF A BLOCK COURSE EXCEPT AT THE FINAL COURSE. ALL GROUT SHALL BE THOROUGHLY CONSOLIDATED BY VIBRATING IMMEDIATELY AFTER PLACING. SHAKING OR RODDING REBAR IS NOT ALLOWED. FILL ALL CELLS WITH GROUT.
8. BLOCK SHALL BE PLACED IN RUNNING BOND AND SHALL BE 8"x8"x16" NOMINAL UNITS, UNO. WHERE BLOCK IS REQUIRED TO BE PLACED IN STACK BOND (SEE ARCH), OPEN-ENDED UNITS (I.E., "SPEED BLOCK") SHALL BE USED.
9. THE CONTRACTOR IS RESPONSIBLE FOR DETERMINING THE SAFETY OF LIFT HEIGHT FOR OPEN ENDED OR FIELD MODIFIED BLOCKS.
10. LAYOUT OF MASONRY BLOCK UNITS SHALL BE RUNNING BOND, U.N.O. BLOCK MODULES/MORTAR JOINTS SHOWN ON THESE DRAWINGS ARE FOR PRESENTATION PURPOSES ONLY, AND NOT INTENDED TO SUPERSEDE ARCHITECTURAL DESIGN REQUIREMENTS.
11. WALL REINFORCEMENT SEE PLANS & ELEVATIONS
12. PROVIDE VERTICAL CONTROL JOINTS IN CMU WALLS AS SHOWN ON PLAN. UNLESS NOTED OTHERWISE VERTICAL CONTROL JOINTS SHALL OCCUR AT 25' - 0" O.C. MAXIMUM ALONG WALL LENGTH, AT FOUNDATION STEPS, FLOOR OR ROOF JOINTS, WALL HEIGHT CHANGES, AND 24" MINIMUM PAST ONE SIDE OF OPENINGS > 6' - 0" WIDE, U.N.O. ON PLANS
13. WHEN THE AMBIENT TEMPERATURE FALLS BELOW 40°F, OR EXCEEDS 100°F, PROVSIONS OF TMS602 / ACI 530 / ASCE6. ARTICLE 1.8C OR ARTICLE 1.8D SHALL BE IMPLEMENTED.

STRUCTURAL CONCRETE NOTES:

1. CONCRETE SHALL BE MIXED, PLACED AND CURED IN ACCORDANCE WITH ACI 318, 2014 EDITION, AND PROJECT SPECIFICATIONS.
2. CONCRETE SHALL NOT BE DROPPED THROUGH REINFORCING STEEL (AS IN WALLS) SO AS TO CAUSE SEGREGATION OF AGGREGATES. IN SUCH CASES, HOPPERS AND VERTICAL CHUTES OR TRUNKS SHALL BE USED. CHUTES OR TRUNKS SHALL BE OF VARIABLE LENGTHS SO THAT FREE UNCONFINED FALL OF CONCRETE SHALL NOT EXCEED SIX FEET. A SUFFICIENT NUMBER OF CHUTES OR TRUNKS SHALL BE USED TO ENSURE THE CONCRETE IS KEPT LEVEL AT ALL TIMES.
3. CONSTRUCTION JOINTS SHALL BE CLEANED AND ROUGHENED BY REMOVING THE ENTIRE SURFACE TO EXPOSE CLEAN AGGREGATE SOLIDLY EMBEDDED IN THE MORTAR MATRIX. SLUSH WITH A COAT OF NEAT CEMENT BEFORE PLACING CONCRETE. SEE PLANS AND DETAILS FOR LOCATION AND TYPE OF CONSTRUCTION JOINT. LOCATIONS OF ADDITIONAL CONSTRUCTION JOINTS NOT SHOWN ON THESE PLANS SHALL BE SUBMITTED FOR APPROVAL BY THE EOR PRIOR TO PLACING ANY CONCRETE.
4. STRUCTURAL CONCRETE SHALL MEET THE FOLLOWING DESIGN CRITERIA:

LOCATION	MIN 28-DAY COMP STRENGTH	CONC TYPE[a]	MAX AGGR. SIZE	MAX W/C RATIO	MAX SLUMP[b]	CEMENT TYPE
FOUNDATIONS STEM WALLS, PILASTER	4000 PSI	NWC	1 1/2"	0.45	4"	II / V
SLAB ON GRADE	4000 PSI	NWC	1"	0.45	4"	II / V
FILL OVER METAL DECK	3000 PSI	LWC	3/4"	0.45	6"	II / V
ALL OTHER STRUCTURAL CONCRETE NO NOTED..	4000 PSI	NWC	1"	0.50	6"	II / V

   a. MAXIMUM DRY WEIGHT OF LIGHTWEIGHT CONCRETE SHALL BE 110 PCF .
   b. SLUMP MEASURED PRIOR TO SUPERPLASTICIZER, WHERE OCCURS.
5. CONCRETE MIX DESIGN AND TESTING SHALL MEET THE REQUIREMENTS OF THE BUILDING CODE, AND SPECIFICATIONS. ALL CONCRETE MIXES SHALL BE DESIGNED BY A RECOGNIZED TESTING LAB STAMPED AND SEALED BY A LICENSED CALIFORNIA CIVIL ENGINEER AND SUBMITTED TO THE SEOR FOR REVIEW PRIOR TO CONCRETE PLACEMENT. STRUCTURAL CONCRETE MIXES SHALL CONSIST OF 5 SACK MINIMUM U.N.O.
6. AGGREGATES IN NORMAL WEIGHT CONCRETE SHALL CONFORM TO ASTM C-33 (HANSONROCK). AGGREGATES IN LIGHT WEIGHT CONCRETE SHALL CONFORM TO ASTM C-330.
7. COMPRESSIVE STRENGTH TEST REPORTS SHALL BE SUBMITTED TO THE BUILDING DEPARTMENT AND THE SEOR.
8. PORTLAND CEMENT SHALL BE AS NOTED ABOVE FOR ALL CONCRETE CONFORMING TO ASTM C150, LOW ALKALI. MILL TESTS WITH CERTIFICATES OF COMPLIANCE SHALL BE SUBMITTED.
9. FLY ASH OR OTHER POZZOLANS CONFORMING TO ASTM C618 CLASS N OR F MAY BE USED AS A PARTIAL SUBSTITUTION FOR PORTLAND CEMENT UP TO A MAXIMUM OF 15% TOTAL CEMENTITIOUS MATERIALS BY WEIGHT IF THE MIX DESIGN IS PROPORTIONED PER ACI 318, SECTION 26.4.3.
10. CONCRETE MIXING OPERATIONS, ETC. SHALL CONFORM TO ASTM C94.
11. LEAN CONCRETE, WHERE SPECIFICALLY INDICATED, SHALL CONTAIN 2 SACKS OF CEMENT PER CUBIC YARD OF CONCRETE.
12. DRYPACK OR NONSHRINK GROUT SHALL HAVE A MINIMUM 28 DAY COMPRESSIVE STRENGTH OF 2 TIMES THE SUPPORTING CONCRETE STRENGTH, AND SHALL BE OF FIVE STAR GROUT, SIKA GROUT 212, OR APPROVED EQUAL WITH VALID CODE REPORT (LARR,ICC;ESR,IAPMO ER). FOR THICK GROUT LAYERS FOLLOW MANUFACTURER'S GUIDELINES TO ATTAIN THE REQUIRED STRENGTH, WHICH MAY INCLUDE THE ADDITION OF PEA GRAVEL.
13. DO NOT USE ANY CONCRETE OR GROUT CONTAINING CHLORIDES. WATER USED IN MIX SHALL BE CLEAN AND POTABLE.
14. FOR INTERIOR SLABS-ON-GRADE AND ALL OTHER SLABS RECEIVING ADHERED FLOORING FINISHES (I.E., GLUED, ETC.), THE MAXIMUM W/C RATIO SHALL NOT EXCEED 0.45. CURING COMPOUNDS USED ON CONCRETE THAT IS TO RECIEVE FINISHES SHALL BE COMPATIBLE WITH TILE AND ADHESIVES OR GROUTS IN ACCORDANCE WITH MANUFACTURER'S DATA AND BE APPROVED BEFORE USE.
15. MAINTAIN CONCRETE ABOVE 50 DEGREES FAHRENHEIT AND IN A MOIST CONDITION FOR A MINIMUM OF 7 DAYS AFTER PLACEMENT UNLESS OTHERWISE ACCEPTED BY SEOR.
16. SEE ARCHITECTURAL DRAWINGS FOR WALL OPENINGS, WALL OFFSETS, CHAMFERS, KERFS, DRIPS AND FOR EXTENT OF DEPRESSIONS, RAMPS, ETC. PROVIDE SLEEVES FOR ALL PIPES THROUGH CONCRETE WALLS AND FOOTINGS WHERE SHOWN ON THESE DRAWINGS. CORING IS NOT PERMITTED WITHOUT PRIOR APPROVAL BY THE SEOR.
17. SEE ARCHITECT'S PLANS FOR LOCATIONS OF SLAB SLOPES, DEPRESSIONS, CURBS, DRAINS, NON-STRUCTURAL PARTITIONS AND OTHER EMBEDDED ITEMS NOT SHOWN ON THE STRUCTURAL PLANS.
18. EXPOSED CORNERS OF SLABS, BEAMS, WALLS, COLUMNS, ETC. SHALL BE FORMED WITH 3/4" CHAMFER, U.N.O.
19. CONSTRUCTION JOINTS (CJ) AND SAWCUT (SC) JOINTS IN SLABS SHALL OCCUR WHERE LOCATED ON PLANS AND DETAILS. CJ'S SHALL HAVE FORMED POUR STOPS. CONSTRUCTION JOINTS IN WALLS AND FOOTINGS NEED NOT OCCUR AT THE SAME LOCATION, U.N.O.

REGISTERED PROFESSIONAL ENGINEER
GREGORY K. MITCHELL
No. 2364
GEOTECHNICAL
STATE OF CALIFORNIA

TYPICAL ABBREVIATIONS

A.B.	ANCHOR BOLT	KLF	KIPS PER LINEAR FOOT
ABV	ABOVE	KSL	KIPS PER SQUARE FOOT
ADD'L	ADDITIONAL	KSI	KIPS PER SQUARE INCH
ADJ.	ADJACENT	L	ANGLE
A.F.F.	ABOVE FINISH FLOOR	LBS	POUND
ALT	ALTERNATE	LFRS	LATERAL FORCE RESISTING SYSTEM
ARCH	ARCHITECT(URAL)		
A.T.R.	ALL THREADED ROD	LLBB	LONG LEG BACK TO BACK
BLDG	BUILDING	LLH	LONG LEG HORIZONTAL
BLK'G	BLOCKING	LLV	LONG LEG VERTICAL
BLW	BELOW	LONG.	LONGITUDINAL
BM	BEAM	LP	LOW POINT
BN	BOUNDARY NAILING	LWC	LIGHTWEIGHT CONCRETE
B.O.	BOTTOM OF	MAX	MAXIMUM
BOT	BOTTOM	M.B.	MACHINE BOLT
BRG	BEARING	MECH	MECHANICAL
B.S.	BOTH SIDES	MFR	MANUFACTURER
BTWN	BETWEEN	MIN	MINIMUM
C	CAMBER OR C-CHANNEL	MTL	METAL
		(N)	NEW
C.I.P.	CAST IN PLACE	NOM.	NOMINAL
CJ	CONTROL/ CONSTRUCTION JOINT	NS	NEAR SIDE OR NON-SHRINK
		NTS	NOT TO SCALE
CL	CENTERLINE	NWC	NORMAL WEIGHT CONCRETE
CLR	CLEAR	OD	OUTSIDE DIAMETER
CMU	CONCRETE MASONRY UNIT	O.C.	ON CENTER
COL	COLUMN	O.F.	OUTSIDE FACE
CONC	CONCRETE	OH	OPPOSITE HAND
CONN	CONNECTION		OSHPD PRE APPROVAL OF MANUFACTURER'S CERTIFICATION
CONT	CONTINUOUS	OPM	
CP	COMPLETE PENETRATION		
CSK	COUNTERSINK	OPN'G	OPENING
CTR(D)	CENTER(ED)	PDF	POWDER DRIVEN FASTENER
DB	BAR OR BOLT DIAMETER	PENE	PENETRATION
DBL	DOUBLE	PERF	PERFORATED
DC	DEMAND CRITICAL	PJ	PANEL JOIST
DEMO	DEMOLITION	PL	PLATE
DET	DETAIL	PLC(S)	PLACE(S)
DIA	DIAMETER	PLF	POUND PER LINEAR FOOT
DIAG	DIAGONAL	PLYWD	PLYWOOD
DIM	DIMENSION	PREFAB	PREFABRICATED
DIST	DISTANCE	PSF	POUND PER SQUARE FOOT
DO	DITTO	PSI	POUND PER SQUARE INCH
DWG	DRAWING	PT	PRESSURE TREATED OR POST TENSION
(E)	EXISITNG		
EA	EACH	QTY	QUNATITY
E.F.	EACH FACE	RAD, R	RADIUS
EJ	EXPANSION JOIST	REF	REFERENCE
EMBED	EMBEDMENT	REINF	REINFORCING
ELEC	ELECTRICAL	REQ'D	REQUIRED
ELEV	ELEVATION	RJ	ROOF JOIST
EN	EDGE NAILING	R.O.	ROUGH OPENING
E.O.	EDGE OF	SB	SILL BOLT
EOR	ENGINEER OF RECORD	SC	SAW CUT OR SLIP CRITICAL
EQ	EQUAL	SCHED	SCHEDULE
EQUI

STRUCTURAL STEEL NOTES:

1. DESIGN, FABRICATION AND ERECTION OF STRUCTURAL STEEL SHALL CONFORM TO THE SPECIFICATIONS AND STANDARD OF THE AMERICAN INSTITUTE OF STEEL CONSTRUCTION (AISC), AS CONTAINED IN THE 15TH EDITION OF "AISC MANUAL OF STEEL CONSTRUCTION".

2. ALL STRUCTURAL STEEL SHALL BE ERECTED PLUMB AND TRUE TO LINE. TEMPORARY BRACING SHALL BE INSTALLED AND SHALL BE LEFT IN PLACE UNTIL OTHER MEANS IS PROVIDED TO ADEQUATELY BRACE THE STRUCTURE.

3. PROVIDE THE FOLLOWING MATERIALS FOR STRUCTURAL STEEL U.N.O.:

STRUCTURAL STEEL GRADES:		
A.	ALL WIDE FLANGE SECTIONS	ASTM A992
B.	SQUARE OR RECTANGULAR HOLLOW STRUCTURAL SECTIONS (HSS)	ASTM A500, GRADE C (F_Y= 50 KSI)
C.	ROUND HOLLOW STRUCTURAL SECTION (HSS)	ASTM A500,GRADE C (F_Y= 46KSI)
C.	PIPES	ASTM A53 TYPE E OR S, GRADE B (F_Y=35 KSI)
E.	PLATES, ANGLES, CHANNELS & TEES	ASTM A36
F.	ALL PLATES PART OF SLRS	ASTM A572, GRADE 50
G.	MACHINE BOLTS (MB)	ASTM A307
H.	HIGH STRENGTH BOLTS (HSB)	ASTM F3125 GRADE A325 GRADE A490
I.	WELDED HEADED STUDS	ASTM A29
J.	THREADED RODS FOR ANCHOR BOLTS	ASTM F1554, GRADE 36

4. 1/8" THICK PLATES AND THICKER SHALL BE GAS CUT OR SAW CUT EXCEPT AS OTHERWISE NOTED, ALL BOLTS SHALL BE HIGH STRENGTH BOLTS. EXCEPT OTHERWISE NOTED, ALL BOLT HOLES SHALL BE STANDARD HOLES.

5. ALL CONNECTIONS NOT SHOWN SHALL CONFORM TO THE "AISC MANUAL OF STEEL CONSTRUCTION" AND SHALL BE SUBMITTED ON SHOP DRAWINGS FOR REVIEW BY SEOR PRIOR TO FABRICATION.

6. ALL WELDED HEADED STUDS, THREADED STUDS, AND DEFORMED BARS SHALL BE NELSON, OR EQUIVALENT, AND WELDED (IN ACCORDANCE WITH MANUFACTURER'S RECOMMENDATIONS BY CERTIFIED WELDERS) SO AS TO FULLY DEVELOP THE TENSILE CAPACITY OF THE CONNECTOR.

7. BOLTS WITH UPSET THREADS ARE NOT ALLOWED. USE THE APPROPRIATE NUT AND WASHER TYPE FOR THE SPECIFIED BOLT.

8. ALL STEEL FABRICATION SHALL BE PERFORMED BY A AISC OR CITY OF LOS ANGELES CERIFIED FABRICATOR.

9. ALL STRUCTURAL STEEL AND MISCELLANEOUS STEEL PERMANENTLY EXPOSED TO THE ELEMENTS SHALL BE HOT DIP GALVANIZED AFTER FABRICATION UNLESS A WEATHER PROOF COATING IS SPECIFIED BY THE ARCHITECT U.N.O. STAINLESS AND WEATHERING STEELS ARE EXCEPTED WHERE SPECIFIED.

10. SEE ARCHITECTURAL DRAWINGS FOR NAILER HOLES, WELDED STUDS OR OTHER ITEMS NOT SHOWN IN THESE DRAWINGS. WHERE STEEL IS EMBEDDED IN CONCRETE OR MASONRY, PROVIDE HOLES AS REQUIRED FOR PASSAGE OF CONTINUOUS REINFORCING BARS WHERE INDICATED ON DRAWINGS. DO NOT CUT HOLES IN STRUCTURAL STEEL WITHOUT PRIOR APPROVAL OF SEOR.

11. ALL ARCHITECTURALLY EXPOSED STRUCTURAL STEEL (AESS) SHALL COMPLY WITH AISC CODE OF STANDARD PRACTICE, SECTION 10.

12. PLACE NON-SHRINK OR DRYPACK GROUT UNDER ALL BASE PLATES AND ALLOW TO CURE BEFORE APPLYING LOADS.

13. ALL OPEN HSS ENDS SHALL BE CAPPED. MIN 1/4" STEEL CAP. PROVIDE SQUARE WELD ALL AROUND, CAP PLATE TO HSS.

14. FOR STRUCTURAL STEEL, IN ADDITION TO THE REQUIREMENTS OF SPECIFICATION SECTION A3.1c, HOT ROLLED SHAPES WITH FLANGES 1 1/2" THICK AND THICKER SHALL HAVE MINIMUM CHARPY V-NOTCH TOUGHNESS OF 20 FT-LB AT 70°F. PLATES 2" THICK AND THICKER SHALL HAVE A MINIMUM CHARPY V-NOTCH TOUGHNESS OF 20FT-LB AT 70°F.

HIGH-STRENGTH BOLT NOTES:

1. SEE STRUCTURAL STEEL NOTES THIS SHEET FOR ADDITIONAL INFORMATION.

2. ALL HIGH-STRENGTH BOLTS SHALL CONFORM TO ASTM F-3125 Gr. A-325 OR Gr. A-490, NUTS SHALL CONFORM TO ASTM A-563 AND WASHERS SHALL CONFORM TO ASTM F-436.

3. HIGH STRENGTH BOLTS SHALL BE INSTALLED IN ACCORDANCE WITH THE CURRENT EDITION OF THE "AISC SPECIFICATION FOR STRUCTURAL JOINTS USING HIGH-STRENGTH BOLTS". SLIP CRITICAL BOLTS (SC) SHALL BE USED FOR ALL "SEISMIC LOAD RESISTING SYSTEM" (SLRS) MEMBER STEEL-TO-STEEL CONNECTIONS.

4. PAINT SHALL NOT BE PERMITTED ON CONTACT SURFACES UNLESS NOTED OTHERWISE. CONTACT SURFACES OF BOLTED PARTS SHALL BE DESCALED AND FREE OF DIRT, OIL, BURRS, PITS, AND OTHER DEFECTS WHICH PREVENT SOLID SEATING OF PARTS.

5. FAYING SURFACE SHALL BE "CLASS A" FOR SLIP CRITICAL BOLTS (SC).

6. SLIP-CRITICAL JOINT ASSEMBLIES SHALL BE FULLY PRE-TENSIONED BY TURN-OF-NUT TIGHTENING, CALIBRATED WRENCH TIGHTENING, INSTALLATION OF ALTERNATE DESIGN BOLTS OR BY DIRECT TENSION INDICATOR TIGHTENING.

WELDING NOTES:

1. WELDING PROCEDURES, ELECTRODES AND WELDER QUALIFICATIONS SHALL CONFORM TO THE "CODE FOR WELDING IN BUILDING CONSTRUCTION", AMERICAN WELDING SOCIETY (AWS), D1.1, D1.8 AND THE AISC "SPECIFICATIONS FOR THE DESIGN, FABRICATION AND ERECTION OF STRUCTURAL STEEL FOR BUILDINGS".

2. ALL WELDERS SHALL HAVE EVIDENCE OF PASSING THE AWS STANDARD QUALIFICATION TESTS, AND SHALL BE CERTIFIED FOR THE WORK THEY ARE PERFORMING.

3. PROJECT WELDING SHALL BE PERFORMED ONLY IN ACCORDANCE WITH WELDING PROCEDURE SPECIFICATIONS (WPS) SUBMITTED BY THE CONTRACTOR AND REVIEWED BY THE SEOR AND PROJECT WELDING INSPECTOR. THE WPS SHALL BE IN ACCORDANCE WITH AWS D1.1-D1.4 & D1.8 CURRENT EDITION.

4. ALL WELDS WITHIN MEMBERS DESIGNATED AS PART OF THE SEISMIC LOAD RESISTING SYSTEM (SLRS) SHALL CONFORM TO THE DETAILING, MATERIALS, WORKMANSHIP, TESTING, AND INSPECTION REQUIREMENTS PER AWS D1.8 AND MUST HAVE A MIN. CVN TOUGHNESS OF 20 FT-LB @ 0°F PER AISC 341 A3.4B.

5. WHERE WELDS ARE DESIGNATED AS DEMAND CRITICAL, THEY SHALL BE MADE WITH A FILLER METAL CAPABLE OF PROVIDING A MINIMUM CHARPY V-NOTCH (CVN) TOUGHNESS OF 20 FT-LB AT 0°F AND 40 FT-LB AT 70°F. SEE AISC 341-16 SECTION A3.4B FOR ADDITIONAL REQUIREMENTS.

6. WELDING OF STRUCTURAL STEEL SHALL BE PERFORMED PER AWS D1.1 & D1.8 USING E70XX ELECTRODES UNLESS OTHERWISED NOTED.

7. WELDING OF REINFORCING BARS SHALL BE PERFORMED PER AWS D1.4 USING E80XX ELECTRODES.

8. WELDING OF METAL DECK AND LIGHT GAGE STEEL SHALL BE IN ACCORDANCE WITH AWS D1.3.

9. ALL GROOVE OR BUTT WELDS SHALL BE COMPLETE PENETRATION WELDS. ALL EXPOSED BUTT WELDS SHALL BE GROUND SMOOTH.

10. ALL EXPOSED WELDS ON ARCHITECTURALLY EXPOSED STRUCTURAL STEEL (AESS) SHALL COMPLY WITH AISC CODE OF STANDARD PRACTICE, SECTION 10.

11. FIELD WELDS HAVE BEEN INDICATED WHERE THEY ARE EXPECTED TO OCCUR. THE CONTRACTOR SHALL DETERMINE THE ACTUAL FIELD WELDING NECESSARY TO COMPLETE THE PROJECT AND INCLUDE ALL ASSOCIATED COSTS WITHIN THE BASE BID.

12. ALL WELDS (SHOP AND FIELD) REQUIRE SPECIAL INSPECTION.

13. ALL FULL PENETRATION WELDS SHALL BE ULTRA-SONIC TESTED PER AWS D1.1 & AISC 341 J6.2.

MOMENT FRAME AND COMPLETE JOINT PENETRATION CONNECTION NOTES:

WELDING ELECTRODES
A. SMAW E8018*
B. FCAW E80 SERIES*

* WELD METAL SHALL BE CAPABLE OF DELIVERING A MINIMUM OF 20 FT-LBS AT -0°F AND 40FT-LBS @ 70°F AS MEASURED BY A CHARPY V-NOTCH IMPACT TEST PER AWS D1.1AND D1.8, APPENDIX III.

* BASE METAL FOR STRUCTURAL SHAPES IN SIZE GROUP 4 & 5 W/ t/f > 11/2" SHALL BE CAPABLE OF DELIVERING A MINIMUM OF 20 FT-LBS AT 70°. F AS MEASURED BY A CHARPY V-NOTCH IMPACT TEST PER A.I.S.C. MANUAL OF STEEL CONSTRUCTION, LATEST EDITION.

STRUCTURAL STEEL

1. ALL WELDING SHALL BE IN ACCORDANCE WITH THE AMERICAN WELDING SOCIETY (AWS) STRUCTURAL WELDING CODE FOR STEEL AWS D1.1-10 AND D1.8.

2. WELDING PROCEDURE SPECIFICATIONS (WPS) SHALL BE SUBMITTED TO THE ENGINEER FOR APPROVAL, PRIOR THE ENGINEER FOR APPROVAL, PRIOR TO THE BEGINNING OF WELDING OPERATIONS. THE WPS SHALL INCLUDE THE WELDING PARAMETERS RECOMMENDED BY THE ELECTRODE MANUFACTURER. SEE AWS D1.1 APPENDIX E, FORM E-1. JOINT DETAILS TO SUIT EXISTING CONDITIONS. THE WELDING ELECTRODE MANUFACTURER'S SPECIFICATIONS SHALL BE ATTACHED TO THE WPS. ALL WELDERS AND INSPECTORS SHALL BE INFORMED OF THE WPS AND SHALL RETAIN A COPY.

3. SEE AWS FOR PREQUALIFIED SMAW WPS'S.

4. SEE AWS FOR PREQUALIFIED FCAW WPS'S.

5. WELDING TO BE DONE BY WELDERS CERTIFIED BY AWS.

6. ONLY SHIELDED METAL ARC WELDING (SMAW) WITH LOW HYDROGEN ELECTRODES OR FLUX CORE ARC WELDING (FCAW), EITHER GAS SHIELDED OF SELF SHIELDED, SHALL BE USED. FOR SMAW, THE TYPICAL REQUIREMENTS SHALL BE ACCORDING TO NOTE #3 ABOVE. WELDING PROCEDURES SHALL MEET THE REQUIREMENTS OF AWS D1.1 4.6.2, OR SHALL BE QUALIFIED BY TEST. FOR FCAW, THE TYPICAL REQUIREMENTS SHALL BE ACCORDING TO NOTE #4 ABOVE. THE WELDING PROCEDURE SHALL MEET THE REQUIREMENTS OF AWS D1.1 4.14.1.6.

7. INDIVIDUAL WELDS SHALL BE CARRIED CONTINUOUSLY TO COMPLETION BEFORE THE JOINT IS ALLOWED TO COOL BELOW THE MINIMUM SPECIFIED PREHEAT AND INTERPASS TEMPERATURE.

8. AT ALL COMPLETE PENETRATION WELDS, WELD BEADS SHALL BE PEENED AFTER EACH PASS, WITH THE EXCEPTION OF THE ROOT PASS AND THE SURFACES PASSES, AS FOLLOWS: TURN SLAG GUN 90 DEG. AND MAKE A MINIMUM OF 4 PASSES WITH DULL CHISEL.

9. PREHEATING IS REQUIRED ON ALL TACK WELDS NOT INCORPORATED INTO FINAL WELDS. SEE AWS D1.1, SECTION 3.3.7.

10. FOR BEAM FLANGE REINFORCEMENT PLATES, THE ROLLING DIRECTION OF GRAIN SHALL BE INDICATED ON THE PLATE AND INSTALLED SO THAT THE GRAIN DIRECTION IS PARALLEL TO THE LONGITUDINAL AXIS OF THE MEMBER.

11. FULL TIME VISUAL INSPECTION BY AN AWS QC-1 QUALIFIED INSPECTOR IS REQUIRED FOR ALL WELDING.

12. 100% ULTRASONIC WELD TESTING BY THE INSPECTOR IS REQUIRED FOR ALL COMPLETE PENETRATION WELDS.

13. AMPEREAGE, VOLTAGE, POLARITY AND ELECTRODE STICK OUT SHALL BE VERIFIED TO BE IN COMPLIANCE WITH THE ELECTRODE MANUFACTURER'S RECOMMENDATIONS.

14. REMOVE B.U. BARS AND WELD TABS AT ALL FLANGE COMPLETE JOINT PENETRATION (CJP) WELDS AT DUCTILE MOMENT FRAME CONNECTIONS. TYPICAL UNLESS NOTED OTHERWISE.

COLD-FORMED STEEL FRAMING NOTES:

1. DESIGN, FABRICATION AND ERECTION OF COLD-FORMED STEEL FRAMING SHALL CONFORM TO THE SPECIFICATIONS AND STANDARD OF THE AMERICAN IRON AND STEEL INSTITUTE (AISI), AS CONTAINED IN THE "SPECIFICATION FOR THE DESIGN OF COLD-FORMED STEEL STRUCTURAL MEMBERS", LATEST EDITION, INCLUDING ALL APPLICABLE AMENDMENTS.

2. ALL COLD-FORMED STEEL FRAMING SHALL BE ERECTED PLUMB AND TRUE TO LINE. TEMPORARY BRACING SHALL BE INSTALLED AND LEFT IN PLACE UNTIL OTHER MEANS IS PROVIDED TO ADEQUATELY BRACE THE STRUCTURE.

3. COLD-FORMED STEEL GRADES:
   A. 18 GA (43 MILS) OR THINNER ....ASTM A1003 GRADE 33 (FY = 33 KSI)
   B. 16 GA (54 MILS) AND THICKER ....ASTM A1003 GRADE 50 (FY = 50 KSI)

4. ALL COLD-FORMED STEEL FRAMING SHALL BE BRACED AS REQUIRED BY SECTION D3 OF THE AISI SPECIFICATION.

5. SUBMIT COLD-FORMED STEEL FRAMING SHOP DRAWINGS AND SPECIFICATIONS TO THE SEOR FOR REVIEW PRIOR TO FABRICATION.

6. COLD-FORMED STEEL STUDS AND TRACKS ARE TO BE ATTACHED WITH SHEET METAL SCREWS (SMS) WITH SIZES CALLED OUT ON THE DETAILS. PENETRATION OF SCREWS THROUGH JOINED MATERIAL SHOULD NOT BE LESS THAN 3 EXPOSED THREADS. SCREWS ARE TO BE INSTALLED AND TIGHTENED IN ACCORDANCE WITH SCREW MANUFACTURER'S RECOMMENDATIONS.

7. ALL HOLES FOR BOLTS SHOULD BE SHALL BE STANDARD HOLES.

8. GALVANIZED COATING SHALL COMPLY WITH ASTM A924.

9. COLD-FORMED STEEL FRAMING SHALL BE PER STEEL STUD MANUFACTURER'S ASSOCIATION (SSMA), ICC ER-3064P.

METAL DECK NOTES (FILLED & UNFILLED):

1. MATERIAL FOR METAL DECK SHALL HAVE A MIN YIELD STRENGTH OF 50 KSI AND CONFORM TO ASTM A653-SS GRADE 33 WITH GALVANIZED G60 COATING COMPLYING WITH ASTM A525.

2. SEE TYPICAL DETAILS FOR REINFORCING OF DECK AROUND OPENINGS. CONTRACTOR SHALL COORDINATE SIZE AND LOCATIONS OF OPENINGS WITH THE VARIOUS TRADES. NO LOADS SHALL BE HUNG FROM DECK WITHOUT APPROVAL OF SEOR.

3. FLOOR AND ROOF DECK IS DESIGNED FOR UNSHORED CONSTRUCTION, UNO. MAINTAIN 3 SPAN CONDITION WHEREVER POSSIBLE (2 SPAN MIN) EXCEPT AT STAIR LANDING AND WHERE NOTED OTHERWISE ON PLANS.

4. PROVIDE 2" MINIMUM BEARING AT ALL SUPPORTS. END LAPS OF METAL DECK SHALL BE A MINIMUM OF 2" AND SHALL OCCUR ONLY OVER SUPPORTS. DECK SHALL BE LAID OUT SO THAT A LOW FLUTE FALLS ON EACH PARALLEL SUPPORT.

5. INSTALL DECK BY WELDING. USE 3/4" DIAMETER PUDDLE WELDS OR WELDED STUDS TO SUPPORTS SPACED AS SHOWN ON CONSTRUCTION DRAWINGS. SPACING FOR TOP SEAM, SIDE SEAM, BUTTON PUNCH, OR PUNCHLOK CONNECTION SHALL BE IN ACCORDANCE WITH DRAWINGS. SEE TYPICAL METAL DECK DETAILS.

6. SUBMIT SHOP DRAWINGS FOR METAL DECK TO THE SEOR FOR REVIEW PRIOR TO FABRICATION. SHOP DRAWINGS SHALL SHOW TYPE OF DECK, LAYOUT OF DECK, THE SIZE AND LOCATION OF ANY OPENINGS OF WIDTH GREATER THAN 1'-0", AND ATTACHMENT METHOD.

7. ALTERNATES TO TYPE OF DECK AND FASTENING MAY BE USED WITH THE APPROVAL OF THE SEOR. DECK PROPERTIES SHALL BE EQUAL TO OR GREATER THAN THOSE SHOWN ON THE PLANS. ANY DECK OR METHOD OF FASTENING SHALL HAVE LATEST EVALUATION REPORT PER CURRENT CODE APPROVING THE DECK FOR THE APPLICATION.

8. METAL DECK WITH CONCRETE FILL SHALL HAVE POSITIVE VENTING. DO NOT EMBED PIPES, SLEEVES, CONDUIT, ETC IN CONCRETE TOPPING UNO.

9. CONCRETE FILL OVER METAL DECK SHALL NOT BE OVER-POURED TO ACHIEVE LEVEL FLOOR.

ROUGH CARPENTRY/ WOOD NOTES:

1. ALL GRADES SPECIFIED ARE MINIMUM GRADES REQUIRED.

2. DOUGLAS FIR (DF) SHALL BE GRADED BY THE WESTERN WOOD PRODUCTS ASSOCIATION GRADING RULES, AND ASTM D245.

3. REDWOOD SHALL BE GRADED BY THE CALIFORNIA REDWOOD ASSOCIATION, REDWOOD INSPECTION SERVICE.

4. SILL PLATES SHALL BE PRESSURE-TREATED (PT) DOUGLAS FIR #1. REDWOOD IS PERMITTED WITH SEOR APPROVAL.

5. TOP PLATES, SILL PLATES, STUDS SHALL BE...................................DF #1
   JOISTS, RAFTERS, PURLINS, BEAMS & POSTS SHALL BE ....DF #1 (U.N.O.)
   LOAD BEARING STUDS SHALL BE..DF #1

6. MOISTURE CONTENT OF SAWN LUMBER SHALL NOT EXCEED 18% WHEN FRAMING STARTS OR SHEATHING IS APPLIED. ANY NONCOMPLIANT WORK SHALL BE REJECTED AND REFRAMED WITH ACCEPTABLE LUMBER.

7. TIMBERS 4" NOMINAL IN THE LEAST DIMENSION SHALL NOT CONTAIN BOXED HEART.

8. SILL PLATES SHALL BE PRESSURE-TREATED AND SHALL BE BOLTED TO CONCRETE WITH 5/8" DIAMETER ANCHOR BOLTS AT 48" O.C. MAX, U.N.O. WITH A BOLT BETWEEN 4" TO 12" FROM THE END OF EACH PIECE OF SILL (2 BOLTS MIN EACH PIECE). PIECE OF SILL SHALL BE CONSIDERED ENDED WHERE PLATE IS CUT OUT OVER ONE-THIRD OF CROSS-SECTION.

9. ANCHOR BOLTS FOR STRUCTURAL WALLS SHALL HAVE 12" EMBEDMENT (U.N.O.)
   MEASURED FROM TOP OF SLAB.

10. STUD BEARING WALLS AND PARTITIONS SHALL HAVE DOUBLE TOP PLATES LAPPED AT WALL AND PARTITION INTERSECTIONS. JOINTS IN UPPER AND LOWER MEMBERS OF DOUBLE TOP PLATES SHALL BE STAGGERED AT LEAST 4' - 0".

11. HOLES IN WOOD AND STEEL MEMBERS FOR BOLTS SHALL BE THE NOMINAL BOLT DIAMETER PLUS 1/16".

12. ALL BOLTS IN WOOD SHALL BE ASTM A307 STANDARD BOLTS, U.N.O. BOLTS AND SCREWS SHALL BE TIGHTENED AT TIME OF ERECTION AND RETIGHTENED BEFORE CLOSING IN OR AT THE COMPLETION OF THE JOB.

13. HOLES IN WOOD FOR LAG SCREW SHANK SHALL BE BORED TO THE SAME DIAMETER AND DEPTH AS THE SHANK, AND FOR THE THREADED PORTION BORED WITH A BIT NOT LARGER THAN 40% TO 70% OF THE SHANK DIAMETER.

14. LAG SCREWS AND SCREWS SHALL BE SCREWED AND NOT DRIVEN INTO PLACE. BOLT HOLES SHALL BE A MINIMUM OF 1/32" TO A MAXIMUM 1/16" LARGER THAN THE BOLT DIAMETER. HOLES SHALL BE ACCURATELY ALIGNED IN MAIN MEMBERS AND SIDE PLATES. BOLTS SHALL NOT BE FORCIBLY DRIVEN.

15. METAL FRAMING CONNECTORS SHALL BE MANUFACTURED BY SIMPSON STRONG TIE COMPANY (CURRENT CATALOG), OR "USP" WITH EQUIVALENT ICC PUBLISHED VALUES AND SHALL BE INSTALLED PER SPECIFICATIONS, NO EXCEPTIONS.

16. INSTALL WINDOWS AND DOORS IN STUD WALLS AFTER DEAD LOADS ARE APPLIED, AND PROVIDE A 1/2" SHIM SPACE AT THE HEAD CONDITION.

17. STEEL WASHERS SHALL BE PROVIDED UNDER HEADS AND NUTS OF ALL BOLTS AND LAG SCREWS WHICH BEAR ON WOOD. STANDARD CUT WASHERS MAY BE USED IN ALL CASES EXCEPT SILL PLATES AND WOOD LEDGERS AGAINST CONCRETE OR MASONRY. NOTE, WASHERS UNDER CARRIAGE BOLT HEADS SHALL BE LARGE ENOUGH TO ALLOW FOR SQUARE SHOULDERS.

18. ONLY LOAD BEARING AND/OR SHEAR WALLS ARE SHOWN
    SEE ARCHITECTURAL DRAWINGS FOR ALL OTHER PARTITIONS.

19. ELEVATIONS SHOWN ON PLANS ARE FROM FINISHED FIRST FLOOR, DATUM ELEVATION = 0' - 0".

20. ALL EXTERIOR WALLS AND INTERIOR BEARING WALLS ARE 2x6 STUDS @ 16" O.C. TYPICAL, U.N.O.

21. ALL EXTERIOR STUD WALLS SHALL BE COMPLETELY SHEATHED WITH 15/32" APA RATED SHEATHING, EXPOSURE-1 (32/16).

22. INTERIOR STRUCTURAL SHEATHED WALLS ARE SHOWN ON PLANS AND SHALL HAVE 15/32" APA RATED SHEATHING EXPOSURE-1, (32/16),TYPICAL U.N.O.

23. ALL STRUCTURAL WALL SHEATHING IS SPLICED ON 2" NOMINAL BLOCKING AT HORIZONTAL JOINTS, U.N.O.

24. STRUCTURAL FLOOR AND ROOF SHEATHING SHALL BE AS ON PLAN AND SHALL BE APA RATED SHEATHING (32/16).
    NOTE: 1/8" GAP SHALL BE PROVIDED BETWEEN ADJACENT PANELS. PANELS WITH GRADE STAMP INDICATION "SIZED FOR SPACING" MAY BE USED TO FACILITATE THIS REQUIREMENT. SEE PLANS FOR REQUIRED BOUNDARY AND EDGE NAILING NOT LISTED BELOW. FLOOR SHEATHING SHALL BE GLUED AND NAILED PER PLAN.

    (* - SHEATHING @ EXTERIOR DECKS SHALL BE EXTERIOR RATED PLYWOOD.)

    BN = BOUNDARY NAILING
    EN = EDGE NAILING
    FN = FIELD NAILING

25. SEE PLANS FOR LOCATION OF NOMINAL 2X FLAT BLOCKING AT ROOF SHEATHING PANEL JOINTS. SEE THIS SHEET FOR PLY CLIP REQUIREMENTS AT UNBLOCKED ROOF PANEL JOINTS. T&G SHEATHING IS NOT REQUIRED WHERE JOINTS ARE BLOCKED.

26. (S) INDICATES METAL FRAMING CONNECTORS MANUFACTURED BY SIMPSON STRONG TIE COMPANY (CURRENT CATALOG) OR "USP" WITH EQUIVALENT ICC PUBLISHED VALUES AND SHALL BE INSTALLED PER SPECIFICATIONS, NO EXCEPTIONS.

27. FASTENERS, INCLUDING NAILS, NUTS AND WASHERS, IN CONTACT WITH PRESERVATIVE - TREATED WOOD SHALL BE OF HOT-DIPPED ZINC COATED GALVANIZED STEEL OR STAINLESS STEEL.

GLUED-LAMINATED FRAMING NOTES:

1. SIMPLE SPANS.. DF COMB. 24F-V4
   CONTINUOUS OR CANTILEVER.................... DF COMB. 24F-V8

2. STRUCTURAL GLUED-LAMINATED (GLULAM) TIMBER OF SOFTWOOD SPECIES SHALL BE IN CONFORMANCE WITH ANSI/AITC STANDARD A190.1 AND ASTM D3737, OR OTHER CODE APPROVED DESIGN, MANUFACTURING AND/OR QUALITY ASSURANCE PROCEDURES. MEMBERS SHALL BE MARKED WITH THE ENGINEERED WOOD SYSTEM APA EWS TRADEMARK INDICATING CONFORMANCE WITH THE MANUFACTURING, QUALITY ASSURANCE, AND MARKING PROVISIONS OF ANSI/AITC STANDARD A190.1. THE MANUFACTURER OR SELLER SHALL SUBMIT CERTIFICATES OF CONFORMANCE.

3. GLULAM TIMBERS SHALL BE MANUFACTURED TO MEET THE FOLLOWING REQUIREMENTS.
   - NDS 24F-V4 REQUIREMENTS: Fb=1850 PSI TOP AND 2400 PSI BOTTOM; Fv=265 PSI ; E=1,800,000 PSI WITH 1600 FT RADIUS CAMBER UNLESS OTHERWISE NOTED ON THE DRAWINGS.
   - NDS 24F-V8 REQUIREMENTS: Fb=2400 PSI TOP AND BOTTOM: Fv=265 PSI; E=1,800,000 PSI WITH 1600 FT RADIUS CAMBER UNLESS OTHERWISE NOTED ON THE DRAWINGS.
   - NO CAMBER AT CANTILEVER PORTION UNO ON PLANS.

4. OTHER GLULAM TIMBER COMBINATIONS AS SPECIFIED IN APA'S CODE REPORT NER-486.

PREPARED BY:
VCA ENGINEERS INC
CIVIL • STRUCTURAL MBE • DBE • SBE
Quality Service Commitment
2151 Michelson Dr. #240
Irvine, CA 92612
Tel. 949.679.0870
Fax. 949.679.9370
Project No.: I699

REVISIONS

NO.	DESCRIPTION	DATE	APPROVED
1	90%CD SUBMITTAL	12/15/2022	
2	100%CD SUBMITTAL	05/01/2023	
3	FINAL SUBMITTAL	06/30/2023	

B.M.: THE CITY OF GARDENA BENCHMARK NO. 5D-15
ELEV. = 43.508'

CITY OF GARDENA
DEPARTMENT OF PUBLIC WORKS - ENGINEERING

GENERAL NOTES

COMMUNITY AQUATICS & SENIOR CENTER

S-0.2

	INITIAL	DATE
DESIGNED BY	AQ	05/01/23
DRAWN BY	AN	06/29/23
CHECKED BY	YN	06/29/23

APPROVED BY:
APPROVED BY: DIRECTOR OF PUBLIC WORKS

SHT. 85 OF 195 DWG. NO. 5-2606

STATEMENT OF SPECIAL INSPECTIONS:

1. THE OWNER SHALL EMPLOY ONE OR MORE SPECIAL INSPECTORS TO PROVIDE INSPECTIONS DURING CONSTRUCTION. THE SPECIAL INSPECTOR SHALL BE A QUALIFIED PERSON WHO SHALL DEMONSTRATE COMPETENCE, TO THE SATISFACTION OF THE BUILDING OFFICIAL, FOR INSPECTION OF THE PARTICULAR TYPE OF CONSTRUCTION OR OPERATION REQUIRING SPECIAL INSPECTION.
2. SPECIAL INSPECTIONS ARE NOT REQUIRED WHERE THE WORK IS DONE ON THE PREMISES OF A FABRICATOR REGISTERED AND APPROVED TO PERFORM SUCH WORK WITHOUT SPECIAL INSPECTION. APPROVED FABRICATORS MUST SUBMIT A CERTIFICATE OF COMPLIANCE FOR OFFSITE FABRICATIONS SUCH AS STRUCTURAL STEEL, PRECAST CONCRETE, GLUED LAMINATED TIMBER, ETC.
3. ALL INSPECTIONS SHALL BE PERFORMED BY INDEPENDENT SPECIAL INSPECTORS. JOB SITE VISITS BY THE STRUCTURAL ENGINEER OR BUILDING OFFICIAL DO NOT CONSTITUTE AND ARE NOT A SUBSTITUTE FOR INSPECTIONS BY A SPECIAL INSPECTOR.
4. ALL INSPECTION REPORTS SHALL BE SUBMITTED TO BUILDING OFFICIAL AND SEOR. THE FINAL REPORTS BY THE SPECIAL INSPECTOR(S) MUST CERTIFY THAT THE ENTIRE STRUCTURAL SYSTEM COMPLIES WITH THE APPROVED PLANS AND SPECIFICATIONS.
5. IT IS SOLELY THE CONTRACTOR'S RESPONSIBILITY TO SEE THAT THESE INSPECTIONS ARE PERFORMED.
6. WORK REQUIRING SPECIAL INSPECTION SHALL BE INSPECTED BY THE SPECIAL INSPECTOR WHO IS PRESENT IN THE AREA WHERE THE WORK IS PERFORMED AND AT THE COMPLETION OF WORK. CONTINUOUS INSPECTION CONSISTS OF FULL-TIME INSPECTION; PERIODIC INSPECTION CONSISTS OF PART-TIME OR INTERMITTENT INSPECTION.
7. THE FOLLOWING SPECIAL INSPECTIONS ARE IN ADDITION TO INSPECTIONS BY THE BUILDING OFFICIAL. THIS LIST IS NOT INTENDED TO BE ALL INCLUSIVE.

TABLE 1705.3

REQUIRED VERIFICATION AND INSPECTION OF CONCRETE CONSTRUCTION

VERIFICATION AND INSPECTION	CONTINUOUS	PERIODIC	REFERENCED STANDARD[a]	CBC REFERENCE
1. INSPECTION OF REINFORCING STEEL, INCLUDING PRESTRESSING TENDONS, AND PLACEMENT	-	X	ACI 318: 3.5, 7.1-7.7	-
2. INSPECTION OF REINFORCING STEEL WELDING IN ACCORDANCE WITH TABLE 1705A.2.1, ITEM 5B.	-	-	AWS D1.4; ACI 318: 3.5.2	-
3. INSPECTION OF ANCHORS TO BE INSTALLED IN CONCRETE PRIOR TO AND DURING PLACEMENT OF CONCRETE WHERE ALLOWABLE LOADS HAVE BEEN INCREASED OR WHERE STRENGTH DESIGN IS USED.	X	-	ACI 318: 8.1.3, 21.2.8	1908.5, 1909.1
4. INSPECTION OF ANCHORS POST-INSTALLED IN HARDENED CONCRETE.[b]	-	X	ACI 318: 3.8.6, 8.1.3, 21.2.8	1909.1
5. VERIFYING USE OF REQUIRED DESIGN MIX.	-	X	ACI 318: CH 4, 5.2-5.4	1904.2, 1910.2, 1910.3
6. AT THE TIME FRESH CONCRETE IS SAMPLED TO FABRICATE SPECIMENS FOR STRENGTH TESTS, PERFORM SLUMP AND AIR CONTENT TESTS, AND DETERMINE THE TEMPERATURE OF THE CONCRETE	X	-	ASTM C172 ASTM C31; ACI 318: 5.6, 5.8	1910.10
7. INSPECTION OF CONCRETE AND SHOTCRETE PLACEMENT FOR PROPER APPLICATION TECHNIQUES.	X	-	ACI 318: 5.9, 5.10	1910.6, 1910.7, 1910.8
8. INSPECTION FOR MAINTENANCE OF SPECIFIED CURING TEMPERATURE AND TECHNIQUES	-	X	ACI 318: 5.11-5.13	1910.9
9. INSPECTION OF PRESTRESSED CONCRETE:				
A. APPLICATION OF PRESTRESSING FORCES.	X	-	ACI 318: 18.20	-
B. GROUTING OF BONDED PRESTRESSING TENDONS IN THE SEISMIC-FORECE-RESISTING SYSTEM	X	-	ACI 318: 18.18.4	-
10. ERECTION OF PRECAST CONCRETE MEMBERS.	-	X	ACI 318: CH 16	-
11. VERIFICATION OF IN-SITU CONCRETE STRENGTH, PRIOR TO STRESSING OF TENDONS IN POSTTENSIONED CONCRETE AND PRIOR TO REMOVAL OF SHORES AND FORMS FROM BEAMS AND STRUCTURAL SLABS.	-	X	ACI 318: 6.2	-
12. INSPECT FORMWORK FOR SHAPE, LOCATION AND DIMENSIONS OF THE CONCRETE MEMBER BEING FORMED.[c]	-	X	ACI 318: 6.1.1	-

FOR SI: 1 INCH = 25.4 MM

a. WHERE APPLICABLE, SEE ALSO SECTION 1705A.11, SPECIAL INSPECTIONS FOR SEISMIC RESISTANCE.
b. SPECIFIC REQUIREMENTS FOR SPECIAL INSPECTIONS SHALL BE INCLUDED IN THE RESEARCH REPORT FOR THE ANCHOR ISSUED BY AN APPROVED SOURCE IN ACCORDANCE WITH ACI 355.2 OR SHALL BE APPROVED BY THE BUILDING OFFICIAL PRIOR TO COMMENCEMENT OF THE WORK.
c. INSTALLATION OFF ALL ADHESIVE ANCHORS IN THE HORIZONTAL AND UPWARDS INCLINED POSITIONS SHALL BE PERFORMED BY AN ACI/CRSI CERTIFIED ANCHOR INSTALLER

TABLE 1705.6

REQUIRED VERIFICATION AND INSPECTION OF SOILS

VERIFICATION AND INSPECTION TASK	CONTINUOUS DURING TASK LISTED	PERIODICALLY DURING TASK LISTED
1. VERIFY MATERIALS BELOW SHALLOW FOUNDATIONS ARE ADEQUATE TO ACHIEVE THE DESIGN BEARING CAPACITY	-	X
2. VERIFY EXCAVATIONS ARE EXTENDED TO PROPER DEPTH AND HAVE REACHED PROPER MATERIAL.	-	X
3. PERFORM CLASSIFICATION AND TESTING OF COMPACTED FILL MATERIALS.	-	X
4. VERIFY USE OF PROPER MATERIALS, DENSITIES AND LIFT THICKNESSES DURING PLACEMENT AND COMPACTION OF COMPACTED FILL.	X	-
5. PRIOR TO PLACEMENT OF COMPACTED FILL, OBSERVE SUBGRADE AND VERIFY THAT SITE HAS BEE N PREPARED PROPERLY.	-	X

TABLE 1705.2.1

REQUIRED VERIFICATION AND INSPECTION OF STEEL CONSTRUCTION

VERIFICATION AND INSPECTION	CONTINUOUS	PERIODIC	REFERENCED STANDARD	CBC REFERENCE
1. MATERIAL VERIFICATION OF HIGH-STRENGTH BOLTS, NUTS AND WASHERS:				
A. IDENTIFICATION MARKINGS TO CONFORM TO ASTM STANDARDS SPECIFIED IN THE APPROVED CONSTRUCTION DOCUMENTS.	-	X	AISC 360, SECTION A3.3 AND APPLICABLE ASTM MATERIAL STANDARDS	-
B. MANUFACTURER'S CERTIFICATE OF COMPLIANCE REQUIRED.	-	X	-	-
2. INSPECTION OF HIGH-STRENGTH BOLTING:				
A. SNUG-TIGHT JOINTS.	-	X	AISC 360, SECTION M2.5	-
B. PRETENSIONED AND SLIP-CRITICAL JOINTS USING TURN-OF-NUT WITH MATCH MARKING, TWIST-OFF BOLT OR DIRECT TENSION INDICATOR METHODS OF INSTALLATION.	-	X		
C. PRETENSIONED AND SLIP-CRITICAL JOINTS USING TURN-OF-NUT WITHOUT MATCH MARKING OR CALIBRATED WRENCH METHODS OF INSTALLATION.	X	-		
3. MATERIAL VERIFICATION OF STRUCTURAL STEEL AND COLD-FORMED STEEL DECK:				
A. FOR STRUCTURAL STEEL, IDENTIFICATION MARKINGS TO CONFORM TO AISC 360.	-	X	AISC 360, SECTION A3.1	2203.1
B. FOR OTHER STEEL. IDENTIFICATION MARKINGS TO CONFORM TO ASTM STANDARDS SPECIFIED IN THE APPROVED CONSTRUCTION DOCUMENTS.	-	X	APPLICABLE ASTM MATERIAL STANDARDS	-
C. MANUFACTURER'S CERTIFIED TEST REPORTS.	-	X	-	-
4. MATERIAL VERIFICATION OF WELD FILLER MATERIALS:				
A. IDENTIFICATION MARKINGS TO CONFORM TO AWS SPECIFICATION IN THE APPROVED CONSTRUCTION DOCUMENTS.	-	X	-	-
B. MANUFACTURER'S CERTIFICATE OF COMPLIANCE REQUIRED.	-	X	-	-
5. INSPECTION OF WELDING:				
A. STRUCTURAL STEEL AND COLD-FORMED STEEL DECK:				
1) COMPLETE AND PARTIAL JOINT PENETRATION GROOVE WELDS.	X	-	AWS D1.1	1705.2.2
2) MULTIPASS FILLET WELDS.	X	-		
3) SINGLE-PASS FILLET WELDS > 5/16"	X	-		
4) PLUG AND SLOT WELDS.	X	-		
5) SINGLE-PASS FILLET WELDS < 5/16"	-	X		
6) FLOOR AND ROOF DECK WELDS.	-	X	AWS D1.3	-
B. REINFORCING STEEL.				
1) VERIFICATION OF WELDABILITY OF REINFORCING STEEL OTHER THAN ASTM A 706.	-	X	AWS D1.4 ACI318: SECTION 3.5.2	-
2) REINFORCING STEEL RESISTING FLEXURAL AND AXIAL FORCES IN INTERMEDIATE AND SPECIAL MOMENT FRAMES, AND BOUNDARY ELEMENTS OF SPECIAL STRUCTURAL WALLS OF CONCRETE AND SHEAR REINFORCEMENT.	X	-		
3) SHEAR REINFORCEMENT.	X	-		
4) OTHER REINFORCING STEEL.	-	X		
6. INSPECTION OF STEEL FRAME JOINT DETAILS FOR COMPLIANCE.				
A. DETAILS SUCH AS BRACING AND STIFFENING.	-	X	-	1705.2.2
B. MEMBER LOCATIONS.	-	X		
C. APPLICATION OF JOINT DETAILS AT EACH CONNECTION.	-	X		

TMS 602-16 TABLE 4

LEVEL 2 REQUIRED VERIFICATION AND INSPECTION OF MASONRY CONSTRUCTION

VERIFICATION AND INSPECTION	FREQUENCY OF INSPECTION: CONTINUOUS	FREQUENCY OF INSPECTION: PERIODIC	TMS 402/ ACI 530/ ASCE 5	TMS 602/ACI 530.1/ASCE 6
1. AS MASONRY CONSTRUCTION BEGINS,VERIFY THAT THE FOLLOWING ARE IN COMPLIANCE:				
A. PROPORTIONS OF SITE-PREPARED MORTAR	-	X	-	ART. 2.1, 2.6 A, & 2.6 C
B. GRADE AND SIZE OF PRESTRESSING TENDONS AND ANCHORAGES	-	X	-	ART. 2.4 B & 2.4 H
C. GRADE, TYPE AND SIZE OF REINFORCEMENT, CONNECTORS, ANCHOR BOLTS, AND PRESTRESSING TENDONS AND ANCHORAGES	-	X	-	ART. 3.4 & 3.6 A
D. PRESTRESSING TECHNIQUE	-	X		ART. 3.6 B
E. PROPERTIES OF THIN-BED MORTAR FOR AAC MASONRY	$X^{(b)}$	$X^{(c)}$	-	ART. 2.1 C.1
F. SAMPLE PANEL CONSTRUCTION	-	X	-	ART. 1.6 D
2. PRIOR TO GROUTING, VERIFY THAT THE FOLLOWING ARE IN COMPLIANCE:				
A. GROUT SPACE	-	X	-	ART. 3.2 D & 3.2 F
B. PLACEMENT OF PRESTRESSING TENDONS AND ANCHORAGES	-	X	SEC. 10.8 & 10.9	ART. 2.4 & 3.6
C. PLACEMENT OF REINFORCEMENT, CONNECTORS, AND ANCHOR BOLTS	-	X	SEC 6.1, 6.3.1, 6.3.6, & 6.3.7	ART. 3.2 E & 3.4
D. PROPORTIONS OF SITE-PREPARED GROUT AND PRESTRESSING GROUT FOR BONDED TENDONS	-	X	-	ART. 2.6 B & 2.4 G.1.b
3. VERIFY COMPLIANCE OF THE FOLLOWING DURING CONSTRUCTION:				
A. MATERIALS AND PROCEDURES WITH THE APPROVED SUBMITTALS	-	X	-	ART. 1.5
B. PLACEMENT OF MASONRY UNITS AND MORTAR JOINT CONSTRUCTION	-	X	-	ART. 3.3 B
C. SIZE AND LOCATION OF STRUCTURE MEMBERS	-	X	-	ART. 3.3 F
D. TYPE,SIZE,AND LOCATION OF ANCHORS, INCLUDING OTHER DETAILS OF ANCHORAGE OF MASONRY TO STRUCTURAL MEMBERS, FRAMES, OR OTHER CONSTRUCTION	-	X	SEC. 1.2.1(e), 6.2.1, & 6.3.1	-
E. WELDING OF REINFORCEMENT	X	-	SEC.6.1.6.1.2	-
F. PREPARATION, CONSTRUCTION, AND PROTECTION OF MASONRY DURING COLD WEATHER (TEMPERATURE BELOW 40°F(4.4°C))OR HOT WEATHER (TEMPERATURE ABOVE90°F(32.2°C))		X	-	ART. 1.8 C & 1.8 D
G. APPLICATION AND MEASUREMENT OF PRESTRESSING FORCE	X		-	ART. 3.6 B
H. PLACEMENT OF GROUT AND PRESTRESSING GROUT FOR BONDED TENDONS IS IN COMPLIANCE	X		-	ART. 3.5 & 3.6 C
I. PLACEMENT OF AAC MASONRY UNITS AND CONSTRUCTION OF THIN-BED MORTAR JOINTS	$X^{(b)}$	$X^{(c)}$	-	ART. 3.3 B.9 & 3.3 F.1.b
4. OBSERVE PREPARATION OF GROUT SPECIMENS, MORTAR SPECIMENS, AND/OR PRISMS	-	X	-	ART. 1.4 B.2.a.3, 1.4 B.2.b.3, 1.4 B.2.c.3, 1.4 B.3, & 1.4 B.4

(a) FREQUENCY REFERS TO THE FREQUENCY OF INSPECTION, WHICH MAY BE CONTINUOUS DURING THE LISTED TASK OR PERIODICALLY DURING THE LISTED TASK, AS DEFINED IN THE TABLE.
(b) REQUIRED FOR THE FIRST 5000 SQUARE FEET (465 SQUARE METERS) OF AAC MASONRY
(c) REQUIRED AFTER THE FIRST 5000 SQUARE FEET (465 SQUARE METERS) OF AAC MASONRY

WOOD LATERAL LOAD RESISTING SYSTEM SPECIAL INSPECTION:

1705.11.2 STRUCTURAL WOOD.
CONTINUOUS SPECIAL INSPECTION IS REQUIRED DURING FIELD GLUING OPERATION OF ELEMENTS OF THE SEISMIC FORCE-RESISTING SYSTEM.
PERIODIC SPECIAL INSPECTION IS REQUIRED FOR NAILING, BOLTING, ANCHORING AND OTHER FASTENING OF COMPONENTS WITHIN THE SEISMIC FORCE-RESISTING SYSTEM, INCLUDING WOOD SHEAR WALLS, WOOD DIAPHRAGMS, DRAG STRUTS, BRACES, SHEAR PANELS AND HOLD0DOWNS.

EXCEPTION:
SPECIAL INSPECTION IS NOT REQUIRED FOR WOOD SHEAR WALLS, SHEAR PANELS AND DIAPHRAGMS, INCLUDING NAILING, BOLTING, ANCHORING AND OTHER FASTENING TO OTHER COMPONENTS OF THE SEISMIC FORCE0RESISTING SYSTEM, WHERE THE FASTENER SPACING IF THE SHEATHING IS MORE THAN 4INCHES (102MM) ON CENTER (O/C)

STRUCTURAL OBSERVATIONS:

1. VISUAL OBSERVATIONS WILL BE PERFORMED AT THE DISCRETION OF THE OWNER, ARCHITECT, SEOR, AND AS REQUIRED BY THE BUILDING OFFICIAL IN ACCORDANCE WITH THE BUILDING CODE.
2. IT IS THE RESPONSIBILITY OF THE GENERAL CONTRACTOR TO NOTIFY THE STRUCTURAL ENGINEER AS TO WHEN EACH MAJOR PHASE OF CONSTRUCTION IS READY FOR OBSERVATION A MINIMUM OF FIVE (5) WORKING DAYS IN ADVANCE.
3. THE CONTRACTOR SHALL BE RESPONSIBLE FOR ENSURING THAT NAILING, REINFORCEMENT, WELDS, CONNECTIONS, ETC. ARE VISIBLE FOR OBSERVATION WHEN THE SEOR IS ON SITE AND FOR ANY SCHEDULING DELAYS DUE TO NONCOMPLIANT ITEMS FOUND DURING THE OBSERVATION.
4. THE FOLLOWING MAJOR PHASES OF CONSTRUCTION REQUIRE A SITE VISIT AND STRUCTURAL OBSERVATION REPORT FROM THE SEOR:

City of Gardena
Committee I-3: Structural Observation

STRUCTURAL OBSERVATION PROGRAM
AND DESIGNATION OF THE
STRUCTURAL OBSERVER

PROJECT ADDRESS: 1645 W166th Street Gardena, CA 90247 PERMIT APPL. NO.: ___________
Description of Work: New aquatics center
Owner: ___________________ Architect: Robert Simons Engineer: Young K. Nam

STRUCTURAL OBSERVATION
(only checked items are required)

Firm or Individual to be responsible for the Structural Observation:
Name: VCA Engineers Inc Phone: (949)679.0870 Calif. Registration: S4029

FOUNDATION	WALL	FRAME	DIAPHRAGM
☑ Footing, Stem Walls, Piers	☐ Concrete	☐ Steel Moment Frame	☐ Concrete
☐ Mat Foundation	☑ Masonry	☐ Steel Braced Frame	☑ Steel Deck
☐ Caisson, Piles, Grade Beams	☐ Wood	☐ Concrete Moment Frame	☐ Wood
☐ Step'g/Retain'g Foundation, Hillside Special Anchors	☑ Others: SUREBOARD	☐ Others:	☐ Others:
☐ Others:			

DECLARATION BY OWNER
I, the Owner of the project, declare that the above listed firm or individual is hired **by me** to be the Structural Observer.

Signature Date

DECLARATION BY ARCHITECT OR ENGINEER OF RECORD (required if the Structural Observer is different from the Architect or Engineer of Record)
I, the Architect or Engineer of record for the project, declare that the above listed firm or individual is designated by me to be responsible for the Structural Observation.

S4029 05/01/23
Signature License No. Date

BELL GARDENS AQUATICS CENTER – 90% CONSTRUCTION DOCUMENTS

PREPARED BY:
VCA ENGINEERS INC
CIVIL • STRUCTURAL MBE • DBE • SBE
Quality Service Commitment
2151 Michelson Dr. #240
Irvine, CA 92612
Tel. 949.679.0870
Fax. 949.679.9370
Project No.: I699

REVISIONS

NO.	DESCRIPTION	DATE	APPROVED
1	90%CD SUBMITTAL	12/15/2022	
2	100%CD SUBMITTAL	05/01/2023	
3	FINAL SUBMITTAL	06/30/2023	

B.M.: THE CITY OF GARDENA BENCHMARK NO. 5D-15 ELEV. = 43.508'

CITY OF GARDENA
DEPARTMENT OF PUBLIC WORKS - ENGINEERING
GENERAL NOTES
COMMUNITY AQUATICS & SENIOR CENTER
S-0.3

	INITIAL	DATE
DESIGNED BY	AQ	05/01/23
DRAWN BY	AN	06/29/23
CHECKED BY	YN	06/29/23

APPROVED BY:
APPROVED BY: DIRECTOR OF PUBLIC WORKS
SHT. 86 OF 195 DWG. NO. 5-2606

FILE PATH: C:\Users\nnahmgoong\Documents\S21-Gardena
PLOT TIME: 10/2/2023 10:38:34 AM

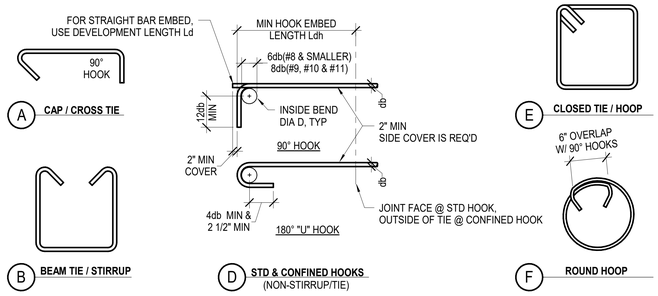

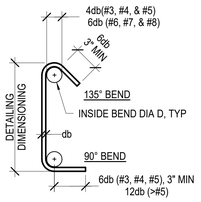

C STIRRUP & TIE HOOKS (#8 & SMALLER ONLY)

BAR SIZE	FINISHED BEND DIAMETER "D" IN INCHES
#3	2 1/4"
#4	3"
#5	3 3/4"
#6	4 1/2"
#7	5 1/4"
#8	8"
#9	9 1/2"
#10	10 3/4"
#11	12"
#18	18 1/4"

STANDARD HOOKS

	BAR SIZE	L_{dh}(in) STD HOOK	LAP SPLICE (in) CLASS B		L_d(in) DEVELOPMENT LENGTH	
			TOP	OTHER	TOP	OTHER
3000 PSI NWC	#3	6	29	23	22	17
	#4	8	38	29	29	22
	#5	10	47	37	36	28
	#6	12	56	43	43	33
	#7	14	82	63	63	48
	#8	16	94	72	72	55
	#9	18	106	81	81	62
	#10	20	119	91	91	70
	#11	22	132	102	101	78
4000 PSI NWC	#3	6	25	20	19	15
	#4	7	33	25	25	19
	#5	9	41	32	31	24
	#6	10	49	38	37	29
	#7	12	71	55	54	42
	#8	14	81	63	62	48
	#9	15	91	71	70	54
	#10	17	103	80	79	61
	#11	19	114	88	87	67
5000 PSI NWC	#3	6	23	17	17	13
	#4	6	30	23	23	17
	#5	8	37	29	28	22
	#6	9	45	34	34	26
	#7	11	64	50	49	38
	#8	12	73	56	56	43
	#9	14	82	63	63	48
	#10	16	93	71	71	54
	#11	17	102	78	78	60

NOTES:
1. Ldh = HOOK DEVELOPMENT LENGTH.
2. Ld = DEVELOPMENT LENGTH.
3. db = REINFORCING BAR DIAMETER
4. SEE BUILDING CODE AND ACI 318-14 VERSION FOR ALL REQUIREMENTS NOT NOTED.
5. FOR LIGHTWEIGHT CONCRETE MULTIPLY Ldh AND Ld VALUES SHOWN BY 1.33.
6. TOP BARS ARE HORIZONTAL WITH MORE THAN 12" OF FRESH CONCRETE CAST BELOW BARS. ALL OTHER BARS ARE "OTHER" BARS.
7. STANDARD HOOK Ldh DOES NOT ACCOUNT FOR THE EFFECT OF TIES. CONFINED HOOK Ldh MAY BE USED WHERE ACI 318-14 25.4.3 APPLIES.
8. VALUES SHOWN ABOVE ARE FOR GRADE 60 (FY=60 KSI) REINFORCEMENT.
9. SPLICE LENGTHS SHOWN ARE FOR CLEAR SPACING NOT LESS THAN 2db, CONCRETE COVER NOT LESS THAN db.
10. IF EPOXY-COATED REINFORCEMENT IS USED, THE DEVELOPMENT/LAP SPLICE LENGTHS HEREIN SHALL BE MULTIPLIED BY APPLICABLE FACTORS IN ACI 318-14 SECTIONS 25.4.2.4 OR 25.4.3.2.
11. IN LIEU OF LAP SPLICES, PROVIDE TYPE 2 COUPLERS PER IAPMO ER 0129. STAGGER COUPLERS SO THAT COUPLERS DO NOT OCCUR IN ROW.

5 S-1.1 TYPICAL CONC REINFORCEMENT DETAILS AND DEVELOPMENT LENGTHS

SCALE:N.T.S.

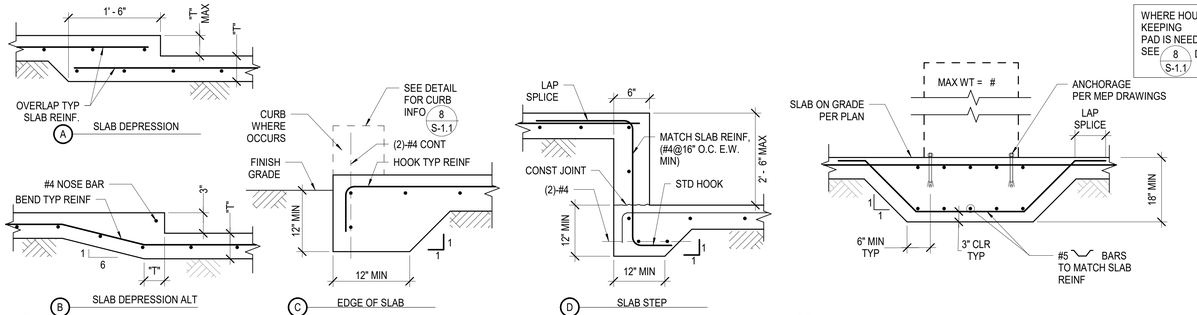

9 S-1.1 TYPICAL SLAB ON GRADE DETAILS

SCALE:N.T.S.

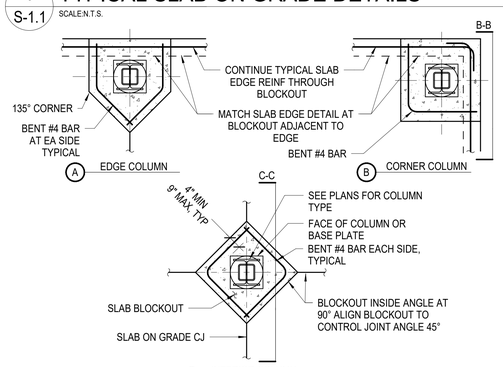

10 S-1.1 EQUIPMENT PAD ON GRADE (INTERIOR)

SCALE:N.T.S.

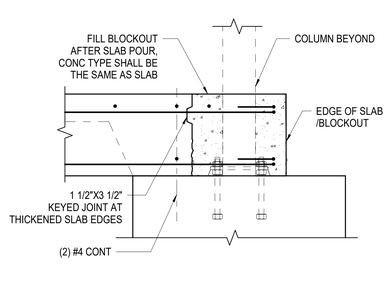

SECTION B-B

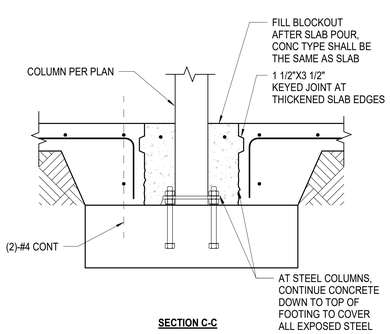

SECTION C-C

11 S-1.1 TYP ISOLATED EQUIPMENT PAD (EXTERIOR)

SCALE:N.T.S.

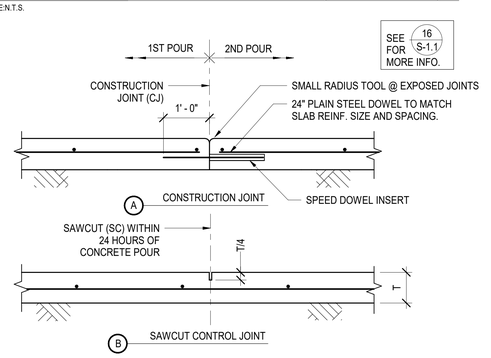

13 S-1.1 TYPICAL SLAB ON GRADE BLOCKOUT AT COLUMN

SCALE:N.T.S.

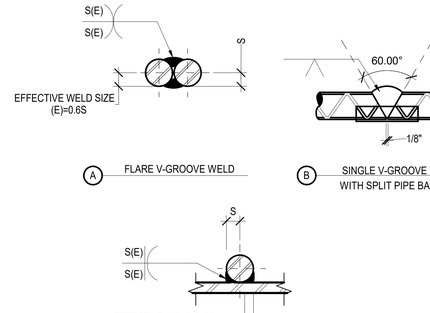

WELD SCHEDULE	
BAR SIZE	MIN WELD LENGTH
#3	3"
#4	3"
#5	3"
#6	4"
#7	5"
#8	5"
#9	6"
#10	6"

NOTES:
1. WELDING SHALL BE WITH LOW HYDROGEN ELECTRODES E90XX AND SHALL CONFORM TO AWS-D1.4.
2. ALL WELDING SHALL BE SUBJECT TO CONTINUOUS INSPECTION.
3. REINFORCING BARS TO BE WELDED SHALL MEET THE REQUIREMENT OF ASTM A706.
4. RADIUS OF REINFORCING BAR = S.
5. THESE ARE SECTIONAL VIEWS. BAR DEFORMATIONS ARE SHOWN ONLY FOR ILLUSTRATIVE PURPOSES.

3 S-1.1 TYPICAL REINFORCING BAR WELDING

SCALE:N.T.S.

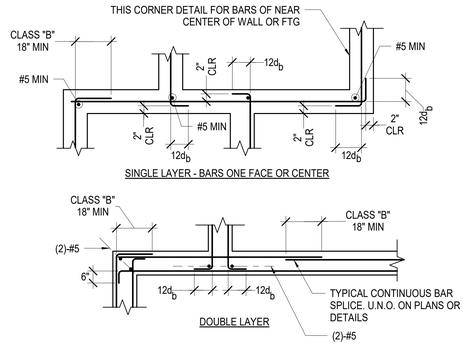

REINF BAR SPLICES AT CONT WALL FTGS INTERSECTIONS

7 S-1.1 SCALE:N.T.S.

8 S-1.1 TYPICAL CONCRETE PAD AND CURB ON GRADE

SCALE:N.T.S.

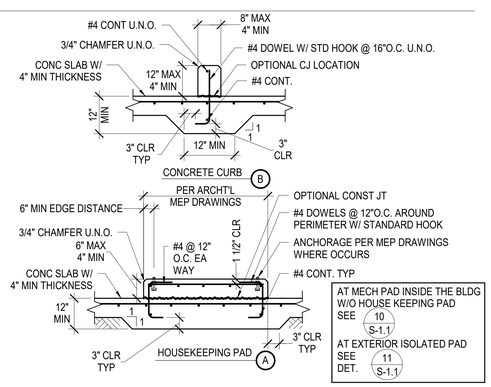

15 S-1.1 TYPICAL SLAB ON GRADE CONTROL JOINT (FOR SLAB THICKNESS 4" TO 6")

SCALE:N.T.S.

16 S-1.1 TYPICAL SLAB ON GRADE CONTROL JOINT

SCALE:N.T.S.

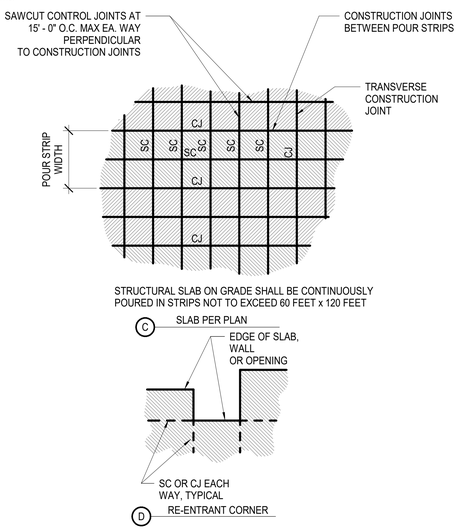

NOTES:
1. SEE ARCHITECTURAL PLANS FOR LOCATIONS OF VISUALLY EXPOSED CONTROL JOINTS.
2. FOR POURING SEQUENCE OTHER THAN THAT SHOWN ON THESE PLANS, SUBMIT SHOP DRAWINGS TO SEOR FOR REVIEW 7 DAYS PRIOR TO POUR.
3. FOR SAW CUT (SC) AND CONSTRUCTION JOINT (CJ) SEE DETAIL 15 / S-1.1
4. FOR TYPICAL SLAB EDGE AND STEPS IN SLAB SEE DETAIL 9 / S-1.1

PREPARED BY:
MCA ENGINEERS INC
CIVIL • STRUCTURAL
2151 Michelson Dr. #240
Irvine, CA 92612
Tel. 949.679.0870
Fax. 949.679.9370
Project No.: I699

REVISIONS			
NO.	DESCRIPTION	DATE	APPROVED
1	90%CD SUBMITTAL	12/15/2022	
2	100%CD SUBMITTAL	05/01/2023	
3	FINAL SUBMITTAL	06/30/2023	

B.M.: THE CITY OF GARDENA BENCHMARK NO. SD-15 ELEV. = 43.508'

CITY OF GARDENA
DEPARTMENT OF PUBLIC WORKS - ENGINEERING
TYPICAL DETAILS-REBAR & S.O.G
COMMUNITY AQUATICS & SENIOR CENTER
S-1.1

	INITIAL	DATE
DESIGNED BY	AQ	05/01/23
DRAWN BY	AN	06/29/23
CHECKED BY	YN	06/29/23

APPROVED BY:
APPROVED BY: DIRECTOR OF PUBLIC WORKS
SHT. 87 OF 195 DWG. NO. 5-2606

REL GARDENA AQUATICS CENTER - 90% CONSTRUCTION DOCUMENTS
PLOT DATE: 6/30/2023 10:08:39 AM
FILE NAME: S:\2021 Projects\I699 - Gardena\Drawings\S1\I699 - Gardena S1.dwg
AN

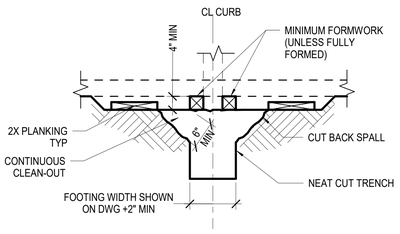

NOTES:
1. FOOTINGS POURED AGAINST EARTH ARE SUBJECT TO APPROVAL OF GEOTECH. ENGR.
2. FOOTING WIDTHS SHALL NOT BE MORE THAN 4" WIDER THAN SHOWN ON PLAN.
3. FORMWORK NOT PERMITTED BELOW GRADE UNLESS FULLY FORMED.
4. FOUNDATION CONCRETE MAY BE PLACED DIRECTLY INTO NEAT EXCAVATIONS PROVIDED THE FOUNDATION TRENCH WALLS ARE STABLE AS DETERMINED BY THE GEOTECHNICAL ENGINEER. THE MINIMUM FORMWORK SHOWN ON THE DRAWINGS IS MANDATORY TO ENSURE CLEAN EXCAVATIONS IMMEDIATELY PRIOR TO AND DURING THE PLACING OF CONCRETE.
5. CONT CLEAN-OUT STAKES NOT PERMITTED IN THE FTG AREA.
6. AFTER CONCRETE HAS SET, REMOVE LAITANCE AND SCUM.

1 S-1.2 FOOTING POURED AGAINST EARTH
SCALE:N.T.S.

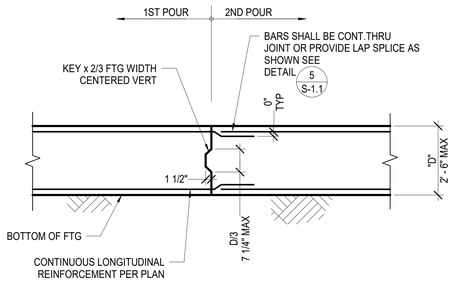

NOTES:
1. PROVIDE ADEQUATE SUPPORT FOR LONGITUDINAL REINFORCEMENT WITHIN 6" OF JOINT USING FOOTING TIES, VERTICAL DOWELS OR OTHER MEANS.
2. SECTIONS SHOWN ARE AT CENTER OF FOOTING IN LONGITUDINAL DIRECTION.

2 S-1.2 CONSTRUCTION JOINT AT FOOTING/ GRADE BEAM
SCALE:N.T.S.

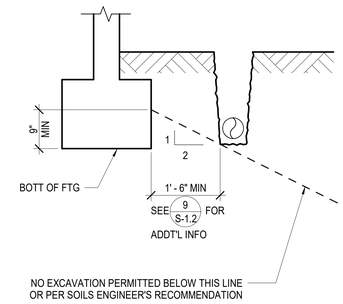

NOTE:
THE CONTRACTOR SHALL BE RESPONSIBLE FOR SHORING OR OTHERWISE MAINTAINING THE SIDES OF THE EXCAVATION FROM CAVE-INS UNTIL ALL BACKFILL IS COMPLETED PER SPECIFICATIONS AND GEOTECHNICAL REPORT.

3 S-1.2 TYPICAL EXCAVATION PARALLEL TO FOOTING
SCALE:N.T.S.

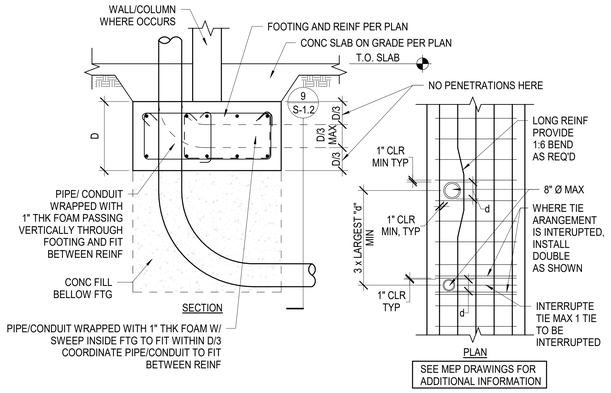

4 S-1.2 PIPE/ CONDUIT SWEEP THRU FOOTING
SCALE:N.T.S.

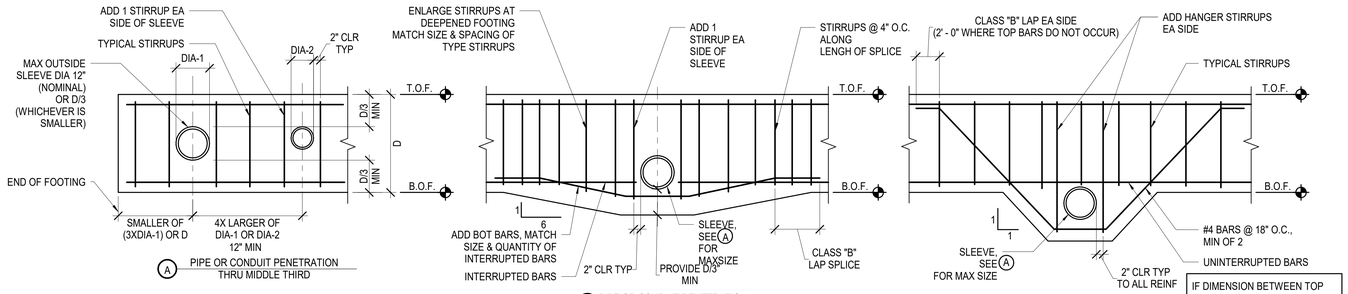

IF DIMENSION BETWEEN TOP OF SLEEVE AND BOTTOM OF FOOTING IS GREATER THAN OR EQUAL TO 4" NO ADDTIONAL REINFORECEMENT IS REQUIRED.
SEE DET. 9 S-1.2

NOTES:
1. DO NOT CUT REINFORCING AT (A) OR (C) ONLY CUT INTERRUPTED REINFORCING AT (B) .
2. PROVIDE MINIMUM 2" CLEAR BETWEEN SLEEVE AND REINFORCING .
3. INSIDE Ø OF METAL SLEEVE SHALL BE 2" MIN LARGER THAN OUTSIDE Ø OF PIPE.
4. CAULK SEAL GAP AT SLEEVE-TO-PIPE/CONDUIT INTERFACE ON EXTERIOR SIDE OF FOOTING .
5. IF PIPE OR CONDUIT PENETRATION OCCURS AT EITHER TOP OR BOTTOM REBAR SPLICE LOCATION PROVIDE 2 ADDITIONAL SHEAR STIRRUPS FOR A TOTAL OF 4 SHEAR STIRRUPS ON EACH SIDE OF PENETRATION .

5 S-1.2 TYPICAL PIPE OR CONDUIT PENETRATIONS THRU CONTINUOUS FOOTINGS
SCALE:N.T.S.

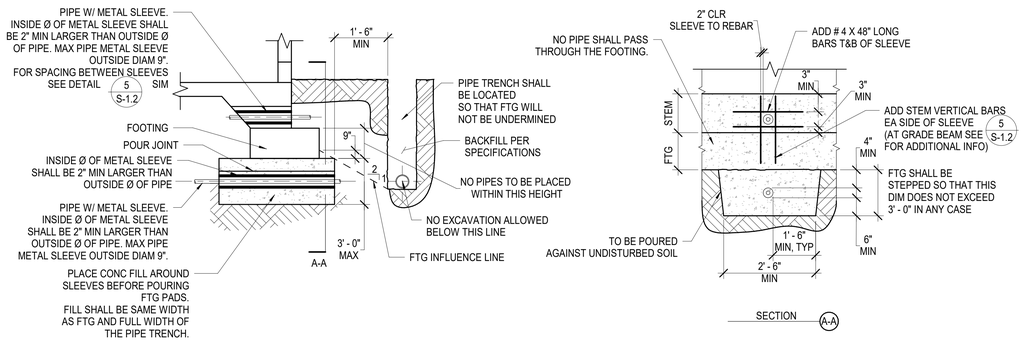

NOTES:
1. CONTRACTOR SHALL COORDINATE ALL PIPE LOCATIONS WITH BUILDING FOUNDATION REQUIREMENTS.
2. IF REQUIREMENTS AS SHOWN CANNOT BE MET, STEP FOOTING PER TYPICAL 'STEPPED FOOTING' DETAIL.
3. REFERENCE CBC SECTION 1805A.4.7

9 S-1.2 PIPE TRENCH FOOTING DETAIL
SCALE:N.T.S.

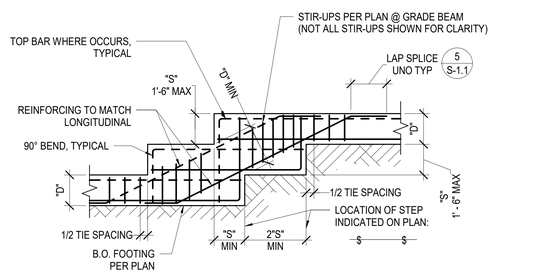

NOTES:
1. FOR FTG REINFORCING SEE PLANS AND DETAILS.
2. VERTICAL WALL DOWELS SHALL EXTEND TO BOTTOM OF FOOTING.
3. TRANSVERSE STEEL NOT SHOWN FOR CLARITY.
4. TWO STEPS ARE SHOWN, DETAIL FOR SINGLE STEP OR ADDITIONAL STEPS IS SIMILAR.

8 S-1.2 TYPICAL STEPPED FOOTING GRADE BEAM
SCALE:N.T.S.

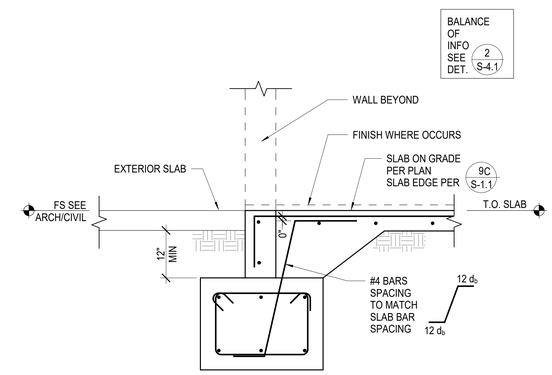

12 S-1.2 FOOTING @ OPENING
SCALE:N.T.S.

PREPARED BY:
MCA ENGINEERS INC
CIVIL ● STRUCTURAL
2151 Michelson Dr. #240
Irvine, CA 92612
Tel. 949.679.0870
Fax. 949.679.9370
Project No.: I699

B.M.: THE CITY OF GARDENA BENCHMARK NO. SD-15 ELEV. = 43.508'

REVISIONS			
NO.	DESCRIPTION	DATE	APPROVED
1	90%CD SUBMITTAL	12/15/2022	
2	100%CD SUBMITTAL	06/01/2023	
3	FINAL SUBMITTAL	06/30/2023	

CITY OF GARDENA
DEPARTMENT OF PUBLIC WORKS - ENGINEERING
TYPICAL DETAILS- FOOTING AND EXCAVATION
COMMUNITY AQUATICS & SENIOR CENTER
S-1.2

	INITIAL	DATE
DESIGNED BY	AQ	05/01/23
DRAWN BY	AN	06/29/23
CHECKED BY	YN	06/29/23

APPROVED BY:
APPROVED BY: DIRECTOR OF PUBLIC WORKS
SHT. 88 OF 195 DWG. NO. 5-2606

BELL GARDENS AQUATICS CENTER - 90% CONSTRUCTION DOCUMENTS
PLOT DATE: 6/30/2023 3:58:58 PM
FILE NAME: C:\Users\anguyen\Documents\121-Gardena Aquatics_anguyen_AN.rvt

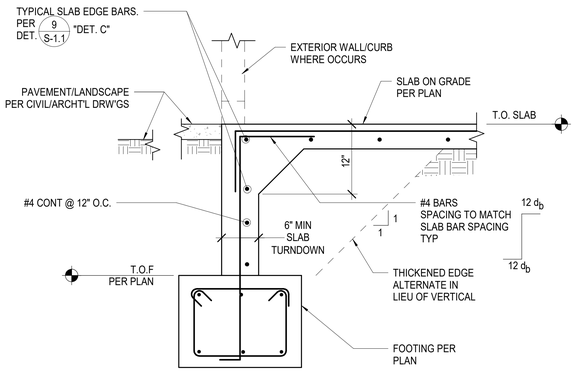

1 S-1.3 TYP SLAB TURNDOWN AT DEEPENED FOOTING

SCALE:N.T.S.

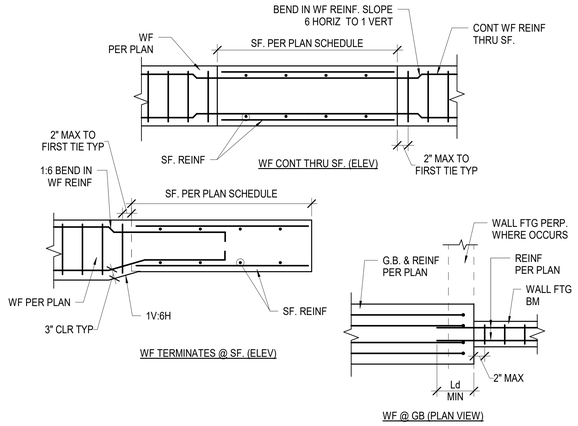

2 S-1.3 WALL FTG SPREAD FTG/GB

SCALE:N.T.S.

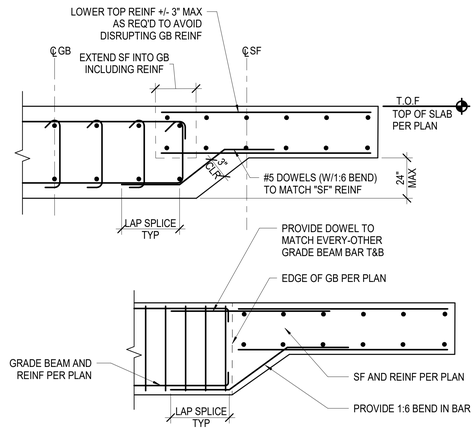

3 S-1.3 SPREAD FOOTING AT GRADE BEAM

SCALE:N.T.S.

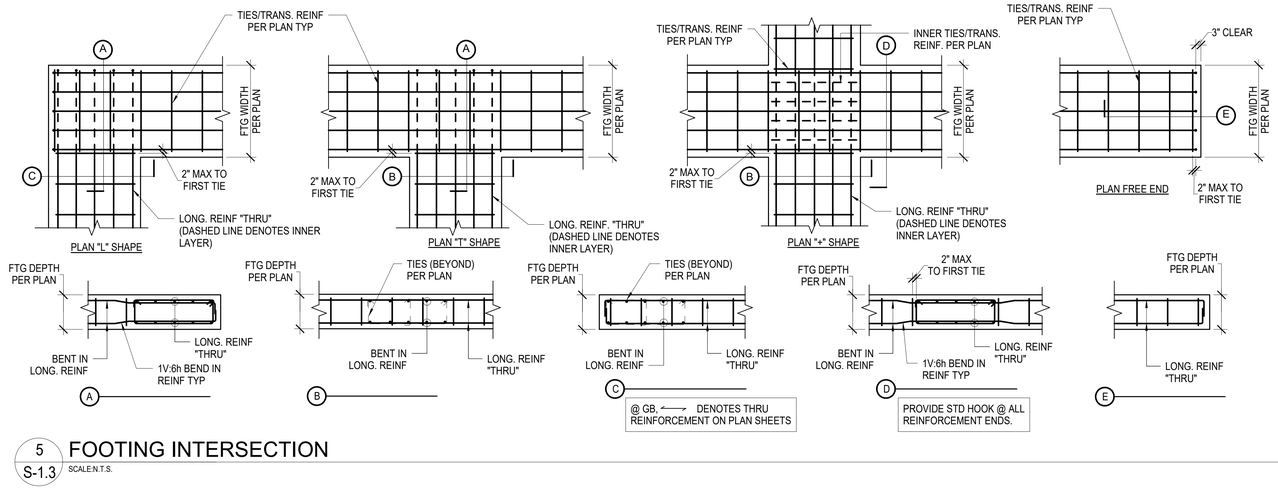

5 S-1.3 FOOTING INTERSECTION

SCALE:N.T.S.

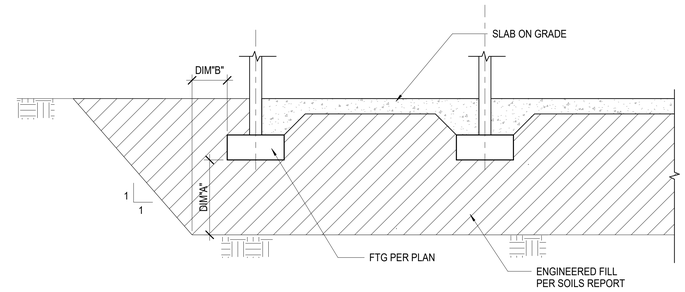

TYPICAL EXCAVATION SECTION

DIM "A":
AS NEEDED TO REMOVE ALL OF THE UNDOCUMENTED FILL SOILS AND A PORTION OF THE NEAR SURFACE NATIVE ALLUVIUM AND AT LEAST 3 FEET MINIUM BELOW BOTTOM OF FOOTING, OR TO A DEPTH OF 6 FEET BELOW EXISTING GRADE, OR 3 FEET BELOW PROPOSED BUILDING PAD, WHICH EVER IS DEEPER.

DIM "B":
5 FEET MINIMUM BEYOND EDGE OF FOOTING OR DEPTH OF FILL BELOW THE FOUNDATIONS, WHICH EVER IS DEEPER.

NOTE:
BALANCE OF INFO SEE SOILS REPORT.

7 S-1.3 OVER EXCAVATION AT TYP FDN WHERE GRADE BEAM OCCURS

SCALE:N.T.S.

PREPARED BY:
MCA ENGINEERS INC
CIVIL ■ STRUCTURAL
2151 Michelson Dr. #240
Irvine, CA 92612
Tel. 949.679.0870
Fax. 949.679.9370
Project No.: I699

B.M.: THE CITY OF GARDENA BENCHMARK NO. SD-15
ELEV. = 43.508'

REVISIONS			
NO.	DESCRIPTION	DATE	APPROVED
1	90%CD SUBMITTAL	12/15/2022	
2	100%CD SUBMITTAL	05/01/2023	
3	FINAL SUBMITTAL	06/30/2023	

	INITIAL	DATE
DESIGNED BY	AQ	05/01/23
DRAWN BY	AN	06/29/23
CHECKED BY	YN	06/29/23

CITY OF GARDENA
DEPARTMENT OF PUBLIC WORKS - ENGINEERING
TYPICAL DETAILS- FOOTING AND EXCAVATION
COMMUNITY AQUATICS & SENIOR CENTER
S-1.3

APPROVED BY:
APPROVED BY: DIRECTOR OF PUBLIC WORKS
SHT. 89 OF 195 DWG. NO. 5-2606

© 2023 MCA ENGINEERS INC
PLOT FILE: C:\2023\I699\Drawings\Documents\S1\Gardena
PLOT DATE: 6/30/2023 3:09:58 PM
AA

REL GARDENA AQUATICS CENTER - 90% CONSTRUCTION DOCUMENTS

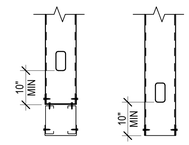

1 CONDITION 2 CONDITION

NON-BEARING - HEADER DIRECTLY OVER OPENING

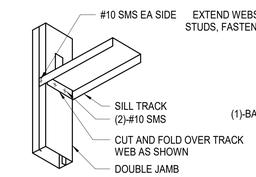

NOTE:
SEE DETAILS D & E FOR ALTERNATE CONNECTION AS CONTRACTORS OPTION.

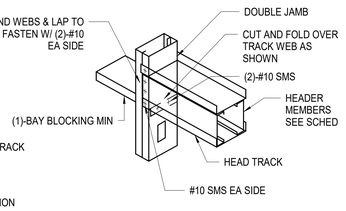

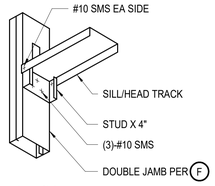

D ALTERNATE

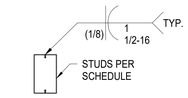

WELD OPTION

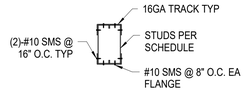

SCREW OPTION

JAMB STUD SCHEDULE		
MAX OPENING "L" OR COMBINED OPENING L= L(RIGHT) + L (LEFT) AT ADJACENT OPENING	HT ≤ 16' - 0" (INTERIOR)	
	STUDS	CONN AT TOP TRACK
L ≤ 6' - 0"	(2) 400S162-33	SL400*
	(2) 600S162-33	SL600*
6' - 0" ≤ L ≤ 10' - 0"	(2) 400S162-33	SL400*
	(2) 600S162-43	SL600*
10' - 0" ≤ L ≤ 16' - 0"	(2) 400S162-43	SL400*
	(2) 600S162-43	SL600*

NOTES:
1. JAMB STUDS DEPTHS SHALL MATCH TYPICAL WALL STUD DEPTHS.
2. * DENOTES TSN (THE STEEL NETWORK) CLIPS. (ICC-ESR-2049)

NOTE:
1. PROVIDE STUDS, TRACKS AND BRACING PER SCHEDULE BELOW:

METAL STUD SCHEDULE UNO ON PLAN REF: STEEL STUD MANUFACTURER'S ASSOCIATION (ESR-3064P)						
TRACK	NOMINAL STUD SIZE	SSMA PRODUCT IDENTIFICATION	STUD SPACING	MINIMUM PROPERTIES		
				Ix (in⁴)	Sx (in³)	Ma (in-k)
BOTTOM TRACK	6"x1 1/2"x16GA	600T150-54	-	2.400	0.609	18.24
TOP TRACK	6"x1 1/2"x16GA	600T150-54	-	2.400	0.609	18.24
CAPPING TRACK	6"x2"x16GA	600T200-54	-	2.641	0.717	21.48

MAX HT FOR INTERIOR METAL STUD SIZE (1 5/8" FLANGE WIDTH) @ 16" O.C. MAX LOAD= 7.5 PSF (L/240)					
GAUGE	MEMBER WEB DEPTH				
	2 1/2"	3 5/8"	4"	6"	8"
14	-	17'-5"	18'-10"	26'-2"	33'-4"
16	-	16'-4"	17'-8"	24'-6"	31'-1"
18	11'-5"	15'-3"	16'-6"	22'-10"	29'-0"

MAX HT FOR INTERIOR METAL STUD SIZE (1 5/8" FLANGE WIDTH) @ 16" O/C MAX LOAD= 5 PSF (L/240)					
GAUGE	MEMBER WEB DEPTH				
	2 1/2"	3 5/8"	4"	6"	8"
14	-	19'-11"	21'-6"	30'-0"	38'-2"
16	-	18'-8"	20'-2"	28'-0"	35'-7"
18	13'-1"	17'-5"	18'-10"	26'-2"	33'-1"

HEADER BEAM SCHEDULE (INTERIOR NON-BEARING PARTITIONS) MAX WIND = 5PSF		
SPAN "L"	CONDITION	LINTEL SIZE
≤ 4' 0"	DET. A - 2	16 GA TRACK, WIDTH TO MATCH
> 4' - 0" ≤ 8' - 0"	DET. A - 1	(2) 6"X20 GA METAL STUDS (600S162-33)
> 8' - 0" ≤ 12' - 0"	DET. A - 1	(2) 6"X18 GA METAL STUDS (600S162-43)
> 12' - 0" ≤ 16' - 0"	DET. A - 1	(2) 8"X16 GA METAL STUDS (800S162-54)

2. ALL STUDS AND TRACKS SHALL CONFORM TO ASTM A1003.
   a. 18GA AND LIGHTER: MINIMUM YIELD POINT OF 33 KSI
   b. 16GA AND HAVIER: MINIMUM YIELD POINT OF 50 KSI.
   c. ALL STUDS AND TRACKS SHALL BE MANUFACTURED BY CURRENT MEMBERS OF THE STEEL STUD MANUFACTURERS ASSOCIATION (SSMA) LISTED IN ICC REPORT NO. ESR-3064P. ALL STUDS AND TRACKS SHALL COMPLY WITH ICC REPORT NO. ESR-3064P.
3. ALL FRAMING COMPONENTS SHALL BE CUT SQUARELY OR ON ANGLE (SUCH AS BRACING) TO SQUARELY FIT AGAINST ABUTTING MEMBERS. MEMBERS SHALL BE HELD FIRMLY POSITION UNTIL PROPERLY FASTENED.
4. STUD AND TRACKS SHALL BE ATTACHED BY WELDING AND SHEET METAL SCREWS AS NOTED ON THE DRAWINGS.
5. MANUFACTURER PROVIDED PUNCH-OUTS MAY BE LOCATED ALONG THE CENTERLINE OF THE WEBS OF THE FRAMING MEMBERS. PUNCH-OUTS SHALL HAVE A MINIMUM CENTER-TO-CENTER SPACING OF 24". PUNCH-OUT SHALL HAVE A MAXIMUM WIDTH OF HALF THE MEMBER DEPTH OR 2 1/2", WHICHEVER IS LESS, AND MAXIMUM LENGTH OF 4 1/2".
6. SPLICES IN STUDS AND BRACES SHALL NOT PERMITTED.
7. ALL FRAMING SHALL BE COORDINATED WITH GLAZING MANUFACTURERS, MECHANICAL, ELECTRICAL, PLUMBING AND OTHER TRADES.
8. PROVIDE 0.08" THICK x 1.1" SQUARE OR 1.425" ROUND WASHERS FOR ALL POWDER ACTUATED FASTENERS.
9. LOCATE PUNCHOUTS 10" CLEAR OF CONNECTIONS. IF PUNCH IS CLOSER THAN 10" TO CONNECTION, SEE DETAIL 13 / S-1.4 DET "C"

A HEADER DETAIL

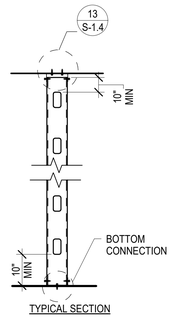

TYPICAL SECTION

B DETAIL

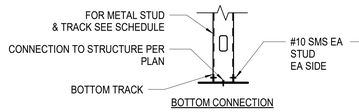

BOTTOM CONNECTION

C DETAIL

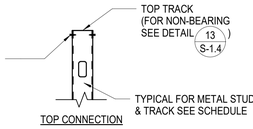

TOP CONNECTION

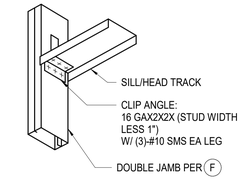

E ALTERNATE

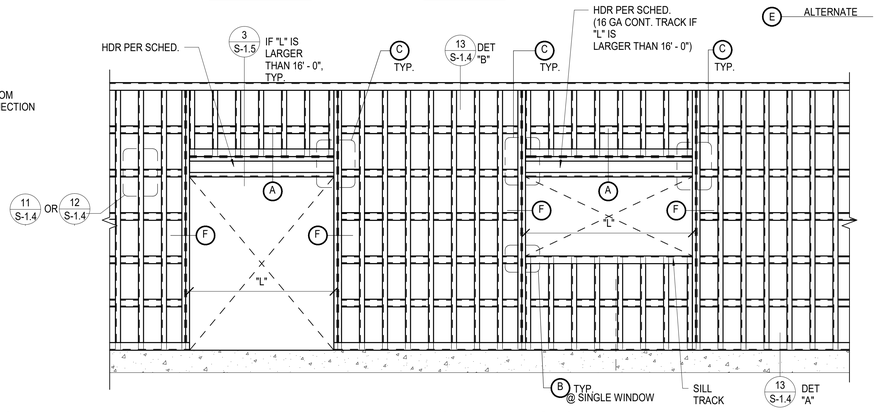

5 S-1.4 TYPICAL NON-BEARING AND MTL STUD SCHED. & WALL FRAMING (INTERIOR)

SCALE:N.T.S.
REF DET-13 / S-1.4

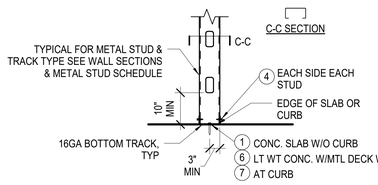

STUD TO BOTTOM TRACK A

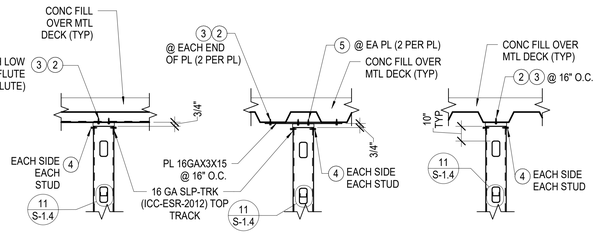

STUD PERPENDICULAR TO STEEL DECK

STUD PARALLEL TO STEEL DECK BETWEEN FLUTES

STUD PARALLEL TO STEEL DECK ON FLUTE

NOTES:
1. FOR STEEL STUD AND TRACK TYPE SEE PLANS, SECTIONS AND METAL STUD SIZE SCHEDULE ON DETAIL 5 / S-1.4
2. FOR METAL STUD FASTENERS, SEE METAL STUD FASTENER SCHEDULE.
3. ALL POWER DRIVEN FASTENERS TO HAVE A MINIMUM PENETRATION OF 1 1/4".

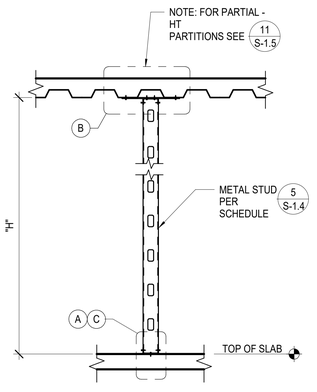

METAL STUD ELEVATION

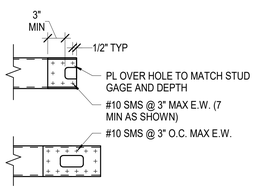

REINF. OF STUD AT PUNCHOUT C

STUD TO DECK DETAIL B

METAL STUD FASTENER SCHEDULE		
MARK	FASTENERS SIZE & SPACING	REMARKS
1	HILTI 0.157" DIA. X-U SHOT PIN @ 32" O.C. W/ 1 1/2 " MIN EMBED	ESR-2269
2	HILTI 0.157" DIA. X-U SHOT PIN @COMPOSITE DECK W/ 1 1/2" MIN EMBED	ESR-2269
3	#10 SMS AT ROOF METAL DECK	ESR-1408
4	#10 SHEET METAL SCREW	ESR-1408
5	#12 SHEET METAL SCREW	ESR-1408
6	HILTI KH-EZ 1/4" X 1.18" EMBED. SCREW ANCHOR @ 24" O.C.	ESR-3027
7	5/8" X 12" HEADED BOLT @ 32"O.C. W/ STD WASHER TYP. (MIN.4"EMBED)	-

PAF: POWER ACTUATED FASTENER (LOW VELOCITY) OR POWER DRIVEN FASTENER HOLES FOR A.B. SHALL BE 1/16" LARGER THAN BOLT SIZE.

NOTES:
1. MAXIMUM STUD HEIGHT "H" FOR STUDS @ 16" O.C. PER SCHEDULE 5 S-1.4
2. SEE ARCHITECTURAL FOR OTHER CONDITIONS.
3. LIMIT PER (2016 CBC TABLE 1604A.3)
   L/360 - W/ PLASTER AND STUCCO FINISHES.
   L/240 - W/ OTHER BRITTLE FINISHES.
   L/120 - W/ FLEXIBLE FINISHES.
4. STUDS CARRYING EQUIPMENT OR CASEWORK WEIGHING 40 LBS OR MORE SHALL BE 16GA MIN.

13 S-1.4 STEEL STUD BRACING DETAIL (INTERIOR ONLY)

SCALE:N.T.S.
REF DET-5 / S-1.4

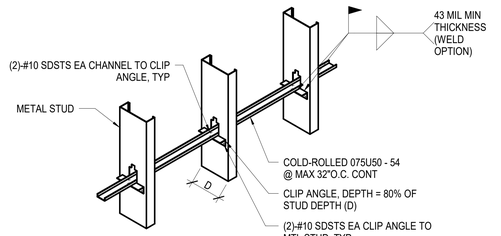

SEE SCHEDULE ON THIS SHEET FOR METAL STUD & TRACK SIZES

11 S-1.4 BRIDGING CHANNEL W/ CLIP ANGLE (WITHOUT PLYWOOD/GYP BOARD)

SCALE:N.T.S.
REF DET-5 / S-1.4

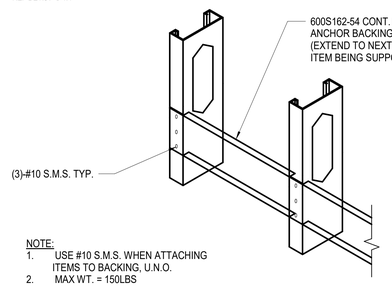

NOTE:
1. USE #10 S.M.S. WHEN ATTACHING ITEMS TO BACKING, U.N.O.
2. MAX WT. = 150LBS

15 S-1.4 BACKING DETAIL

SCALE:N.T.S.

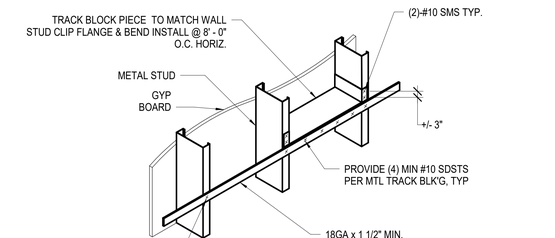

SEE SCHEDULE ON THIS SHEET FOR METAL STUD & TRACK SIZES

12 S-1.4 SINGLE FLAT STRAP BRIDGING W/ BLOCKING (WITH PLYWOOD/GYP BOARD ON ONE SIDE)

SCALE:N.T.S.
REF DET-5 / S-1.4

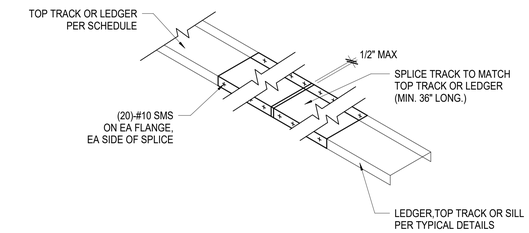

16 S-1.4 TOP TRACK, LEDGER & SILL SPLICE DETAIL

SCALE:N.T.S.

PREPARED BY:
VCA ENGINEERS INC
CIVIL ● STRUCTURAL
2151 Michelson Dr. #240
Irvine, CA 92612
Tel. 949.679.0870
Fax. 949.679.9370
Project No.: I699

REVISIONS			
NO.	DESCRIPTION	DATE	APPROVED
1	90%CD SUBMITTAL	12/15/2022	
2	100%CD SUBMITTAL	06/01/2023	
3	FINAL SUBMITTAL	06/30/2023	

B.M.: THE CITY OF GARDENA BENCHMARK NO. SD-15 ELEV. = 43.508'

CITY OF GARDENA
DEPARTMENT OF PUBLIC WORKS - ENGINEERING
TYPICAL DETAILS-METAL STUD
COMMUNITY AQUATICS & SENIOR CENTER
S-1.4

	INITIAL	DATE
DESIGNED BY	AQ	05/01/23
DRAWN BY	AN	06/29/23
CHECKED BY	YN	06/29/23

APPROVED BY:
APPROVED BY: DIRECTOR OF PUBLIC WORKS
SHT. 90 OF 195 DWG. NO. 5-2606

BELL GARDENS AQUATICS CENTER - 90% CONSTRUCTION DOCUMENTS
PLOT DATE: 6/30/2023 10:56:48 AM Drawing File Name: C:\Users\anguyen\Documents\Revit Local Files\Central Files\Gardena 21-1_anguyen.rvt

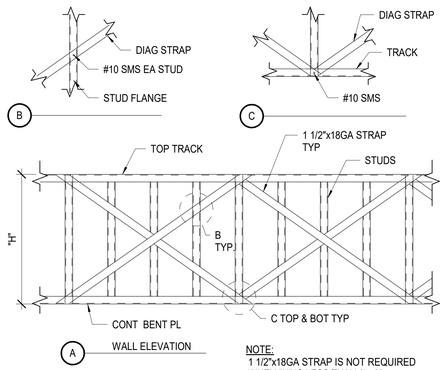

NOTE:
1 1/2"x18GA STRAP IS NOT REQUIRED WHEN "H" IS LESS THAN 3' - 0".

1 S-1.5 IN-PLANE BRACING

SCALE:N.T.S.
REF DET:3 / S-1.5

BLOCKING NOTE:
PLACE SOLID BLOCKING AT ENDS OF FLOOR SYSTEM, ADJACENT TO ALL OPENINGS, AND AT 10' - 0"O.C. MAX.

STRAP NOTE:
TOP STRAP NOT REQ'D. IF CONTINUOUSLY ATTACHED RIGID SHEATHING IS USED. TEMPORARY BRACING OF TOP FLANGE DURING CONSTRUCTION MAY BE REQ'D.

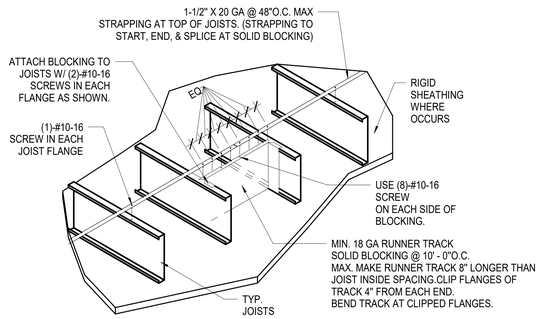

2 S-1.5 CEILING JOISTS FLANGE BRACING

SCALE:N.T.S.
REF DET:7 / S-1.5

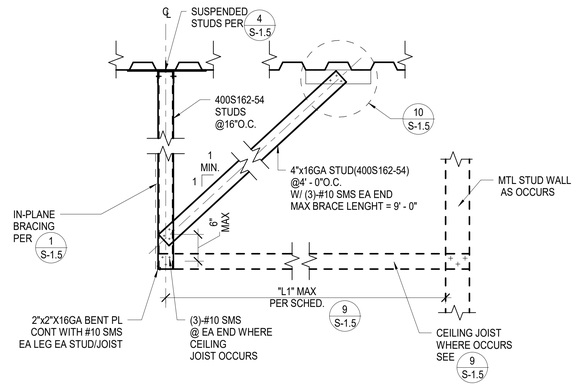

3 S-1.5 STUD BRACING (INTERIOR ONLY)

SCALE:N.T.S.
REF DET:3 / S-1.4

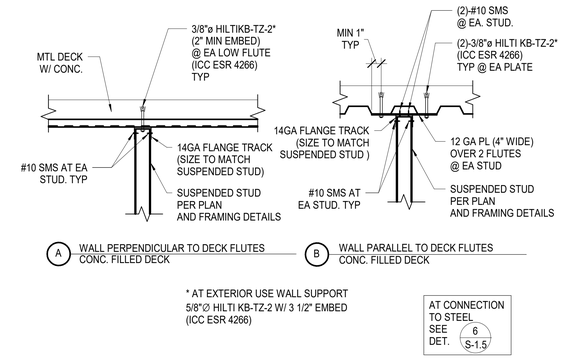

* AT EXTERIOR USE WALL SUPPORT 5/8"∅ HILTI KB-TZ-2 W/ 3 1/2" EMBED (ICC ESR 4266)

AT CONNECTION TO STEEL SEE DET. 6 S-1.5

4 S-1.5 SUSPENDED STUD TO METAL DECK DETAIL

SCALE:N.T.S.
REF DET:3 / S-1.5

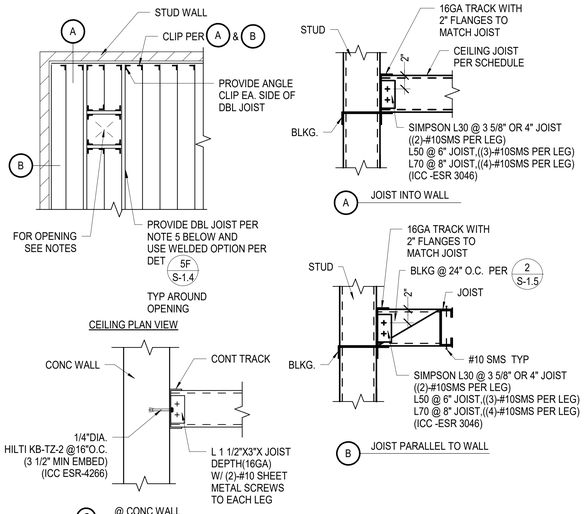

INTERIOR METAL CEILING JOIST SCHEDULE					
NOMINAL SIZE	SSMA PRODUCT IDENTIFICATION	Ixx(IN⁴)	Sxx(IN³)	SPACING (IN)	MAXIMUM SPAN (L1)
3 5/8"x20GA	362S162-33	0.551	0.304	16	8' - 6"
4"x18GA	400S162-43	0.892	0.446	16	9' - 6"
6"x18GA	600S162-43	2.316	0.772	16	11' - 0"
8"x18GA	800S162-43	4.633	1.158	16	12' - 0"

NOTES:

1. JOIST AND TRACK DESIGNATIONS ARE BASED ON STEEL STUD MANUFACTURER'S ASSOCIATION (ICC ER-3064P).
2. DESIGN LOADS:
   DEAD LOAD = 20 PSF
3. SEE TYP. CEILING JOIST FRAMING DETAIL 7 / S-1.5
5. WHERE JOIST IS CUT, PROVIDE DOUBLE JOIST TO ADJ. CEILING JOIST NEXT TO CUT JOIST (DO NOT CUT MORE THAN ONE JOIST).
6. SEE DETAIL 2 / S-1.5 FOR BRACING REQUIREMENTS.

9 S-1.5 METAL CEILING JOIST SCHEDULE (INTERIOR ONLY)

SCALE:N.T.S.
REF DET:3 / S-1.5

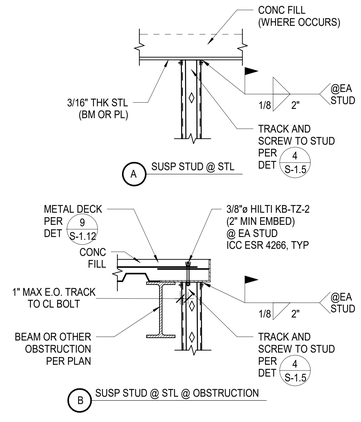

6 S-1.5 SUSPENDED STUD AT STEEL

SCALE:N.T.S.
REF DET:4 / S-1.5

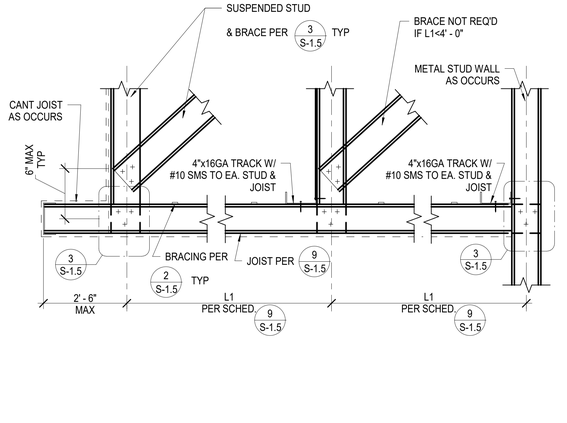

7 S-1.5 INTERIOR CEILING FRAMING

SCALE:N.T.S.

METAL STUD FASTENER SCHEDULE		
MARK	FASTENERS SIZE & SPACING	REMARKS
2	HILTI KH-EZ 3/8"X2 1/2"EMBED. @COMPOSITE DECK	ESR-3027
5	#12 SHEET METAL SCREW	ESR-1408

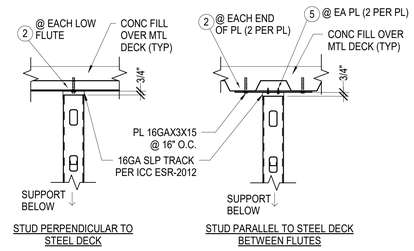

8 S-1.5 STUD TO DECK

SCALE:N.T.S.

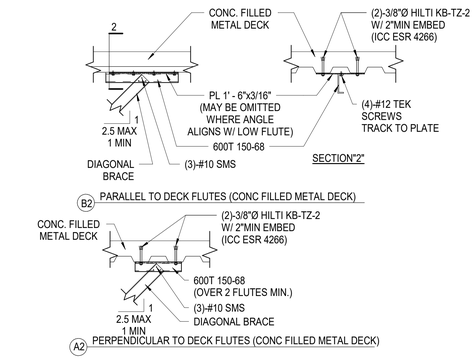

10 S-1.5 WALL BRACE

SCALE:N.T.S.
REF DET:3 / S-1.5

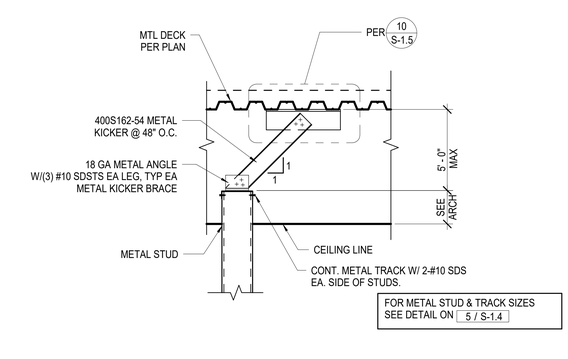

11 S-1.5 NON-LOAD BEARING INTERIOR WALL FRAMED TO CEILING W/ DIAGONAL KICKER

SCALE:N.T.S.
REF DET:13 / S-1.4

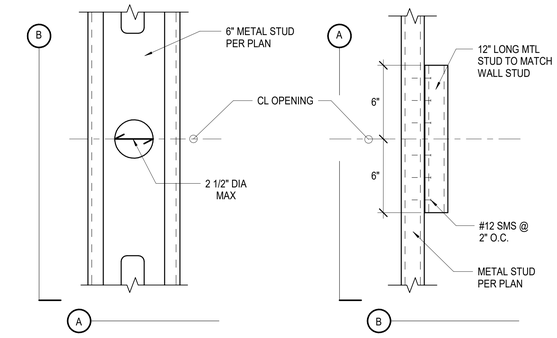

12 S-1.5 REINFORCING OF OPNG IN METAL STUD FOR PLUMBING

SCALE:N.T.S.

PREPARED BY:
MCA ENGINEERS INC
CIVIL ● STRUCTURAL
2151 Michelson Dr. #240
Irvine, CA 92612
Tel. 949.679.0870
Fax. 949.679.9370
Project No.: I699

REVISIONS			
NO.	DESCRIPTION	DATE	APPROVED
1	90%CD SUBMITTAL	12/15/2022	
2	100%CD SUBMITTAL	06/01/2023	
3	FINAL SUBMITTAL	06/30/2023	

B.M.: THE CITY OF GARDENA BENCHMARK NO. SD-15
ELEV. = 43.508'

CITY OF GARDENA
DEPARTMENT OF PUBLIC WORKS - ENGINEERING

TYPICAL DETAILS-METAL STUD

COMMUNITY AQUATICS & SENIOR CENTER

S-1.5

	INITIAL	DATE
DESIGNED BY	AQ	05/01/23
DRAWN BY	AN	06/29/23
CHECKED BY	YN	06/29/23

APPROVED BY:
APPROVED BY: DIRECTOR OF PUBLIC WORKS
SHT. 91 OF 195 DWG. NO. 5-2606

PLOT DATE: 7/1/2023 10:58:08 AM
FILE NAME: C:\Users\ANGELAQ\Documents\121-Gardena Aquatics\Arch\Details\S-1.5 Typical Details-Metal Stud.dwg
AQ

BELL GARDENS AQUATICS CENTER - 90% CONSTRUCTION DOCUMENTS

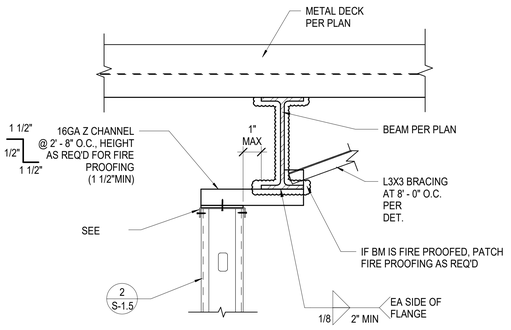

1 S-1.6 TYPICAL WALL BRACE NEAR BEAM (INTERIOR ONLY)

SCALE:N.T.S.

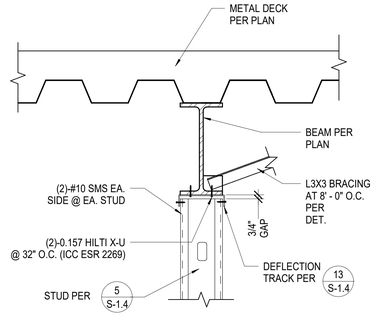

2 S-1.6 TYP TOP TRACK AT WALL UNDER BEAM

SCALE:N.T.S.
REF DET.6 / S-1.6

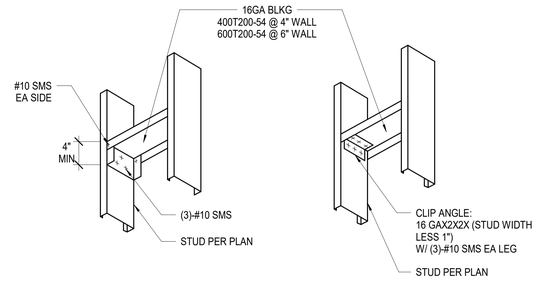

3 S-1.6 NON-STRUCTURAL BLOCKING

SCALE:N.T.S.

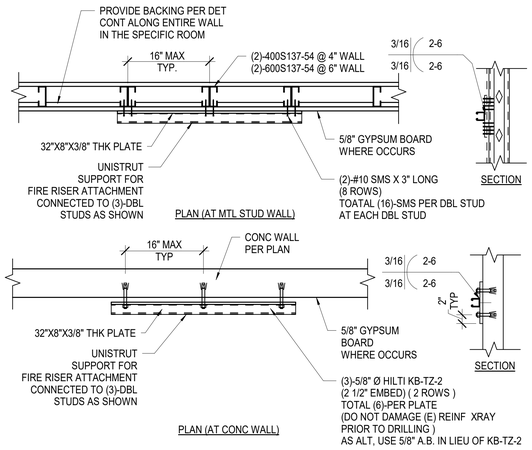

5 S-1.6 UNISTRUT TO METAL STUD/CONC WALL CONNECTION

SCALE:N.T.S.

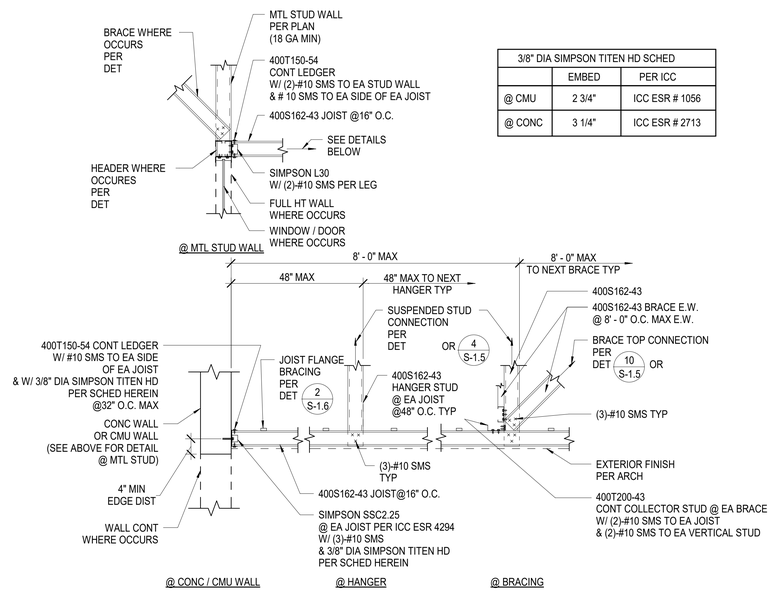

3/8" DIA SIMPSON TITEN HD SCHED		
	EMBED	PER ICC
@ CMU	2 3/4"	ICC ESR # 1056
@ CONC	3 1/4"	ICC ESR # 2713

6 S-1.6 EXTERIOR CEILING FRAMING

SCALE:N.T.S.

PREPARED BY:
MCA ENGINEERS INC
CIVIL • STRUCTURAL
SAN DIEGO • ORANGE COUNTY
2151 Michelson Dr. #240
Irvine, CA 92612
Tel. 949.679.0870
Fax. 949.679.9370
Project No.: I699

REVISIONS			
NO.	DESCRIPTION	DATE	APPROVED
1	90%CD SUBMITTAL	12/15/2022	
2	100%CD SUBMITTAL	05/01/2023	
3	FINAL SUBMITTAL	06/30/2023	

B.M.: THE CITY OF GARDENA BENCHMARK NO. SD-15
ELEV. = 43.508'

CITY OF GARDENA
DEPARTMENT OF PUBLIC WORKS - ENGINEERING

TYPICAL DETAILS-METAL STUD

COMMUNITY AQUATICS & SENIOR CENTER

S-1.6

	INITIAL	DATE
DESIGNED BY	AQ	05/01/23
DRAWN BY	AN	06/29/23
CHECKED BY	YN	06/29/23

APPROVED BY:

APPROVED BY: DIRECTOR OF PUBLIC WORKS

SHT. 92 OF 195 DWG. NO. S-2606

REL GARDENA AQUATICS CENTER - 90% CONSTRUCTION DOCUMENTS
PLOT DATE: 6/30/2023 10:24:49 AM
PLOT BY: Ali Nikkhah
P:\LP Files\G\Gardena\Aquatics Center\Documents\S01-Gardena Typical Details.dwg

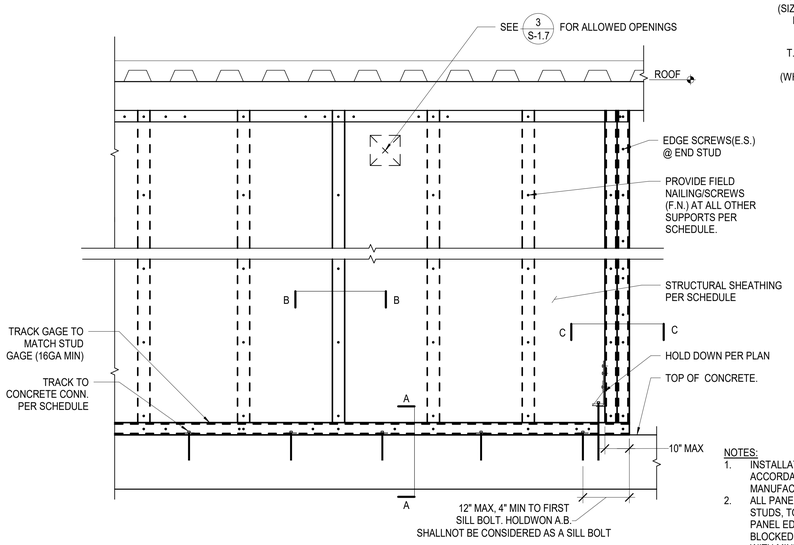

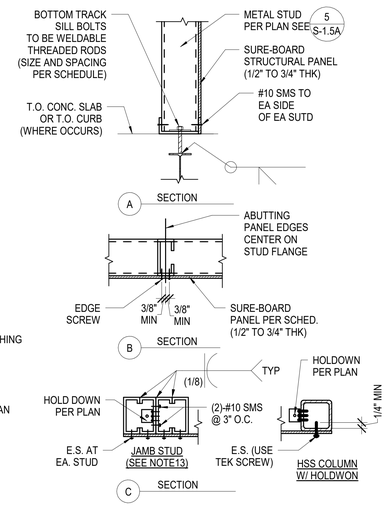

SURE-BOARD SHEARWALL SCHEDULE					
MARK	TYPICAL ATTACHMENT INFO.	MIN. GAUGE STUDS/TRACK	EDGE SCREW(E.S)	BOTTOM TRACK SILL BOLTS	ALLOWABLE CAPACITY (ASD)
SB1	SERIES 200 SURE-BOARD FULLY BLOCKED, W/ #8 SCREW (#2 PILOT POINT, 1 1/4" MIN. LENGTH) 12" O.C. @ FIELD, FOR EDGE SCREW SEE SCHEDULE	18GA	#8 @ 6"O.C.	5/8" A.B. @ 24"O.C.	562 PLF
SB2	SERIES 200 SURE-BOARD FULLY BLOCKED, W/ #8 SCREW (#2 PILOT POINT, 1 1/4" MIN. LENGTH) 12" O.C. @ FIELD, FOR EDGE SCREW SEE SCHEDULE	18GA	#8 @ 4"O.C.	5/8" A.B. @ 24"O.C.	770 PLF
SB3	SERIES 200 SURE-BOARD FULLY BLOCKED, W/ #8 SCREW (#2 PILOT POINT, 1 1/4" MIN. LENGTH) 12" O.C. @ FIELD, FOR EDGE SCREW SEE SCHEDULE	18GA	#8 @ 3"O.C.	5/8" A.B. @ 16"O.C.	1126 PLF

NOTES:
1. INSTALLATION OF SURE-BOARD SHEAR WALLS MUST BE IN ACCORDANCE WITH IAPMO ES REPORT NUMBER 0126 AND MANUFACTURER'S PUBLISHED INSTALLATION INSTRUCTIONS.
2. ALL PANEL EDGES MUST BE BLOCKED, FRAMING MEMBERS SUCH AS STUDS, TOP AND BOTTOM TRACKS ARE CONSIDERED BLOCKING; PANEL EDGES THAT DO NOT FALL ON FRAMING MEMBERS MUST BE BLOCKED WITH STUDS, TRACK, OR CONTINUOUS FLAT STRAP MATERIAL WITH MINIMUM THICKNESS AND STEEL PROPERTIES AS THE STUD FRAMING MEMBERS PER THE TABLE.
3. SEE PLAN FOR SHEAR WALL BOUNDARY FRAMING MEMBERS.
4. SEE PLAN FOR SHEAR WALL HOLD DOWN ANCHOR.
5. ALL SURE-BOARD STEEL FRAMING SHALL BE 16GA, 24" SPACING MAX.
6. PROVIDE STEEL FRAMING PER BEARING WALL SCHEDULE IF GAGE NOTED IN BEARING WALL SCHEDULE IS THICKER THAN STEEL MINIMUM GAGE SHOWN IN SCHEDULE ABOVE.
7. STEEL STUDS & TRACKS SHALL COMPLY WITH ASTM A653 GR 50 (3.3.3 IAMPO ER 126)
8. A MINIMUM PANEL SIZE OF 16"X96" IS ACCEPTABLE, PROVIDED ALL PERIMETER EDGES ARE FASTENED TO FRAMING MEMBERS AT THE REQ'D SPACING(4.2.2.3 IAPMO ER 126)
9. THE STEEL FACE OF SURE-BOARD PANEL SHALL BE IN CONTACT WITH THE FRAMING.
10. COLLECTOR POSTS AT EACH END OF SHEAR WALL SHALL BE MINIMUM DOUBLE STUD & SAME GAGE AS FRAMING METERIAL (3.3.3 ER-0126)
11. SERIES 200 SURE-BOARD FULLY BLOCKED, W/ SCREW PER SCHEDULE
12. SCREWS SHALL PENETRATE AT LEAST 3 EXPOSED THREADS INTO FRAMING MEMBERS. SCREW HEADS SHALL BE DRIVEN FLUSH WITH PANEL SURFACE.(4.2.2.2 ER-0126)
13. JAMB STUDS SHALL BE 16GA WITH 15/8" FLANGE "S" SECTION TO MATCH WALL DEPTH.

5 S-1.7 TYPICAL SURE-BOARD SHEAR WALL SCHEDULE

SCALE: 3/4" = 1'-0"
REF DET.8 / S-5.1

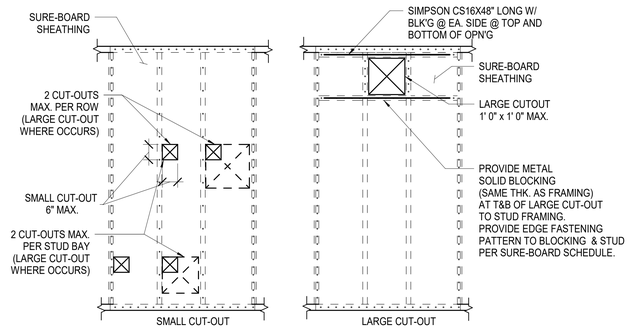

NOTES:
1. LOCATE CUT-OUTS NEXT TO STUD FRAMING TYPICAL, & 16" MIN. FROM END OF WALL. FOR LARGE OPENINGS.
2. LARGE BLOCKOUT MAYBE LOCATED AS REQUIRED IN THE SHEAR PANEL.
3. DO NOT CUT MORE THAN 1 LARGE CUT-OUT IN ANY SINGLE SHEAR PANEL.
4. DO NOT OVER CUT ANY OPENINGS.

3 S-1.7 OPENING IN SURE-BOARD PANEL

SCALE: 3/4" = 1'-0"
REF DET.9 / S-1.7

PREPARED BY:
MCA ENGINEERS INC
CIVIL ● STRUCTURAL
2151 Michelson Dr. #240
Irvine, CA 92612
Tel. 949.679.0870
Fax. 949.679.9370
Project No.: I699

B.M.: THE CITY OF GARDENA BENCHMARK NO. SD-15
ELEV. = 43.508'

REVISIONS			
NO.	DESCRIPTION	DATE	APPROVED
1	90%CD SUBMITTAL	12/15/2022	
2	100%CD SUBMITTAL	06/01/2023	
3	FINAL SUBMITTAL	06/30/2023	

CITY OF GARDENA
DEPARTMENT OF PUBLIC WORKS - ENGINEERING

TYPICAL DETAILS-METAL STUD

COMMUNITY AQUATICS & SENIOR CENTER

S-1.7

	INITIAL	DATE
DESIGNED BY	AQ	05/01/23
DRAWN BY	AN	06/29/23
CHECKED BY	YN	06/29/23

APPROVED BY:
APPROVED BY: DIRECTOR OF PUBLIC WORKS

SHT. 93 OF 195 DWG. NO. S-2606

BELL GARDENS AQUATICS CENTER - 90% CONSTRUCTION DOCUMENTS
PLOT DATE: 12/20/2023 10:58:28 AM
PLOT BY: C:\Users\JoseAguilar\Documents\21-Gardena\Arch\S-1.7 Details.dwg

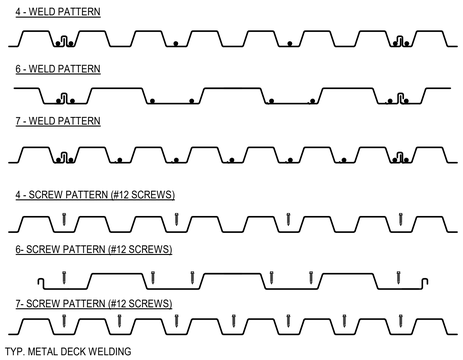

1 S-1.8 TYP METAL DECK WELDING/SCREW PATTERNS

SCALE:N.T.S.

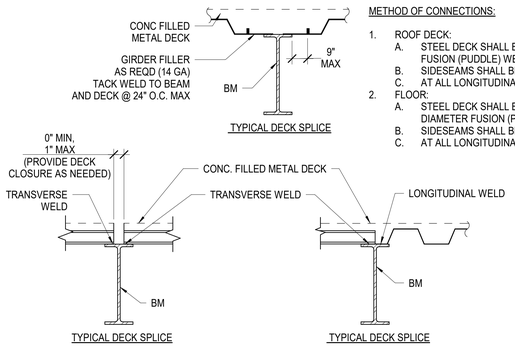

METHOD OF CONNECTIONS:

1. ROOF DECK:
   - A. STEEL DECK SHALL BE FASTENED TO STEEL FRAMING AT ENDS OF UNITS AND AT ALL INTERMEDIATE SUPPORTS BY MINIMUM (4)-3/4" DIAMETER FUSION (PUDDLE) WELDS EACH PANEL. WHEN TWO PANELS ABUT, EACH PANEL SHALL BE SO ATTACHED.
   - B. SIDESEAMS SHALL BE BUTTON PUNCHED AT 36" O.C.
   - C. AT ALL LONGITUDINAL SUPPORTS AND MEMBERS PARALLEL TO FLUTES, FASTEN WITH 3/4" DIAMETER FUSION (PUDDLE) WELDS @ 12" O.C.
2. FLOOR:
   - A. STEEL DECK SHALL BE FASTENED TO STEEL FRAMING AT ENDS OF UNITS AND AT ALL INTERMEDIATE SUPPORTS BY (4)-3/4" DIA DIAMETER FUSION (PUDDLE) WELDS EACH PANEL. WHEN TWO PANELS ABUT, EACH PANEL SHALL BE SO ATTACHED.
   - B. SIDESEAMS SHALL BE BUTTON PUNCHED @ 36" O.C.
   - C. AT ALL LONGITUDINAL SUPPORTS AND MEMBERS PARALLEL TO FLUTES, FASTEN WITH 3/4" DIA FUSION (PUDDLE) WELDS @ 12" O.C.

NOTES:

1. PLACE REINFORCEMENT 3/4" CLEAR FROM TOP OF CONCRETE.
2. SEE DET 4 / S-1.8 FOR TYPICAL WELDED STUD DETAIL FOR WELDED HEADED STUDS.
3. SEE DET 6 / S-1.11 FOR TYPICAL FRAMING @ COLUMN
4. SEE DET 12 / S-1.8 FOR TYP. STAIR & ELEVATOR OPENING.
5. SEE DET 6 / S-1.8 FOR SLOPED DECK TO STEEL BEAM.
6. SEE DET 11 / S-1.8 FOR DECK WELD/SIDE LAP DETAIL.

2 S-1.8 TYPICAL METAL DECK CONNECTION & PROPERTIES

SCALE:N.T.S.

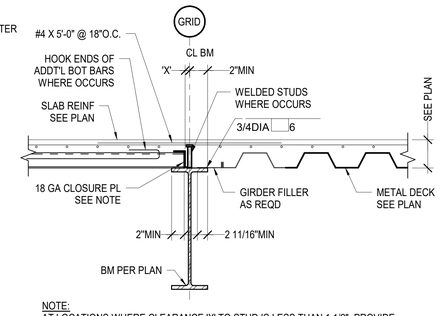

NOTE:
AT LOCATIONS WHERE CLEARANCE 'X' TO STUD IS LESS THAN 1 1/2", PROVIDE CLOSURE BELOW HIGH FLUTES ONLY AND PLACE STUDS ADJACENT TO LOW FLUTES.

3 S-1.8 METAL DECK TRANSITION

SCALE:N.T.S.

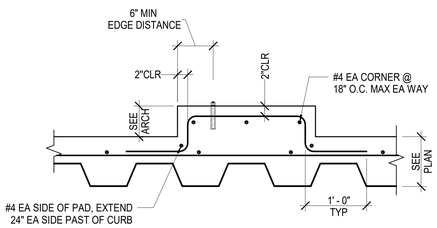

4 S-1.8 EQUIPMENT PAD ON METAL DECK

SCALE:N.T.S.

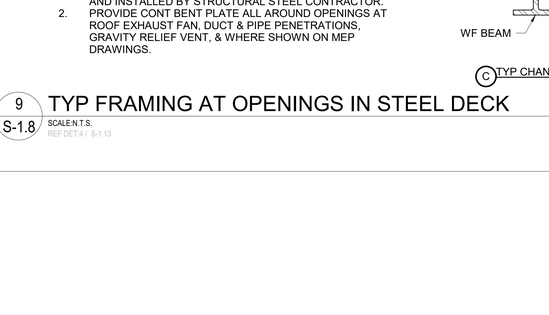

5 S-1.8 EDGE CLOSURE AT ELEVATOR SILL SUPPORT

SCALE:N.T.S.
REF DET.1 / S-3.1

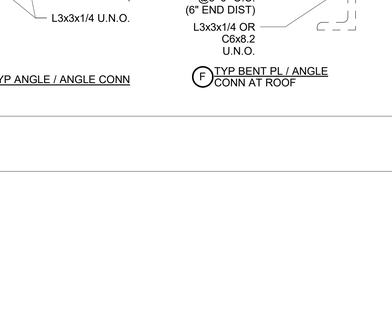

NOTE:
IF "D" IS LESS THAN 3/16" THEN BENT PLATE IS NOT REQ'D

6 S-1.8 TYP SLOPED DECK TO BEAM DETAIL

SCALE:N.T.S.
REF DET.7 / S-1.8

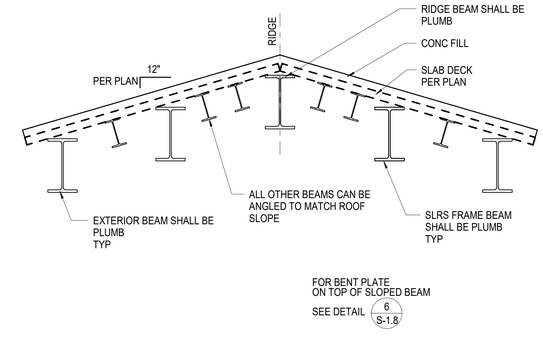

7 S-1.8 TYP SLOPED ROOF SECTION

SCALE:N.T.S.

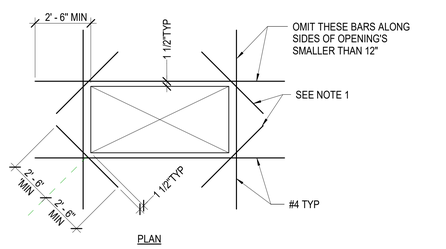

NOTES:

1. PROVIDE (2)-#4X5' - 0" AT ALL RE-ENTRANT CORNERS AND AT ALL OPENINGS GREATER THAN 6' - 0" SUCH AS ELEVATOR, STAIR OPENINGS AND AIR SHAFTS.
2. ALL OPENINGS LARGER THAN 2' - 0" SQ REQUIRE PERIMETER SUPPORT AND ARE TO BE APPROVED BY STRUCTURAL ENGINEER.

8 S-1.8 TYP SLAB ON METAL DECK OPENING

SCALE:N.T.S.

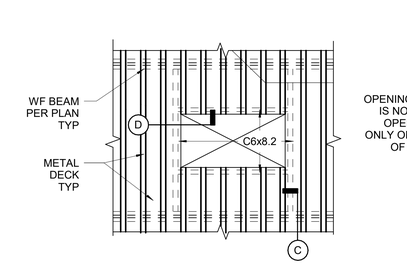

A OPENING GREATER THAN 18" TO 60"

NOTES:

1. FRAMING AROUND DECK OPENINGS TO BE FURNISHED AND INSTALLED BY STRUCTURAL STEEL CONTRACTOR.
2. PROVIDE CONT BENT PLATE ALL AROUND OPENINGS AT ROOF EXHAUST FAN, DUCT & PIPE PENETRATIONS, GRAVITY RELIEF VENT, & WHERE SHOWN ON MEP DRAWINGS.

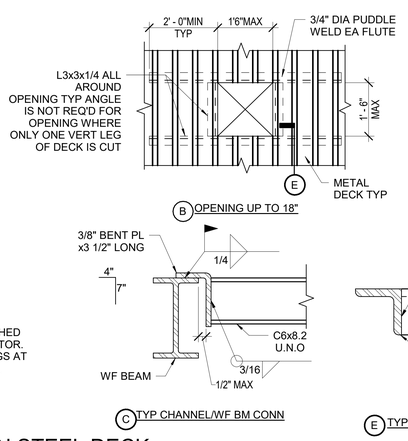

9 S-1.8 TYP FRAMING AT OPENINGS IN STEEL DECK

SCALE:N.T.S.
REF DET.4 / S-1.13

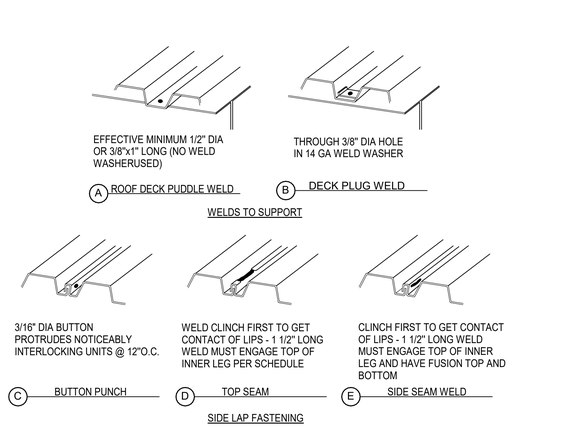

11 S-1.8 TYP METAL DECK WELDING

SCALE:N.T.S.

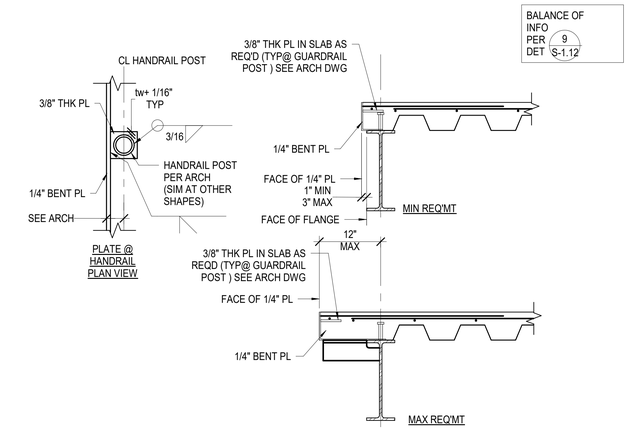

12 S-1.8 PLATE AT HANDRAIL POST

SCALE:N.T.S.

PREPARED BY:
MCA ENGINEERS INC
CIVIL ● STRUCTURAL
2151 Michelson Dr. #240
Irvine, CA 92612
Tel. 949.679.0870
Fax. 949.679.9370
Project No.: I699

REVISIONS

NO.	DESCRIPTION	DATE	APPROVED
1	90%CD SUBMITTAL	12/15/2022	
2	100%CD SUBMITTAL	05/01/2023	
3	FINAL SUBMITTAL	06/30/2023	

B.M.: THE CITY OF GARDENA BENCHMARK NO. SD-15
ELEV. = 43.508'

CITY OF GARDENA
DEPARTMENT OF PUBLIC WORKS - ENGINEERING

TYPICAL DETAILS-METAL DECK

COMMUNITY AQUATICS & SENIOR CENTER

S-1.8

	INITIAL	DATE
DESIGNED BY	AQ	05/01/23
DRAWN BY	AN	06/29/23
CHECKED BY	YN	06/29/23

APPROVED BY:

APPROVED BY: DIRECTOR OF PUBLIC WORKS

SHT. 94 OF 195 DWG. NO. 5-2606

BID SET - 90% CONSTRUCTION DOCUMENTS
PLOT DATE: 6/30/2023 9:58:38 AM
PLOT TIME: C:\Users\ANGELA\Desktop\Job Documents\101 Gardena\Arch\S-1.8.dwg
PLOT BY: AN

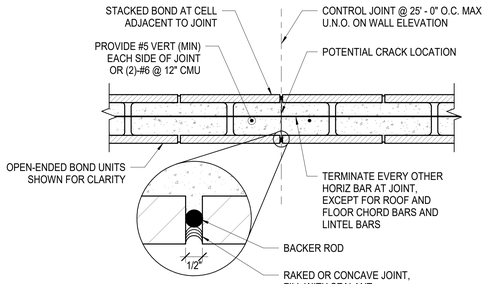

1 S-1.9 TYP CMU WALL CONTROL JOINT (C.J.)
SCALE:N.T.S.

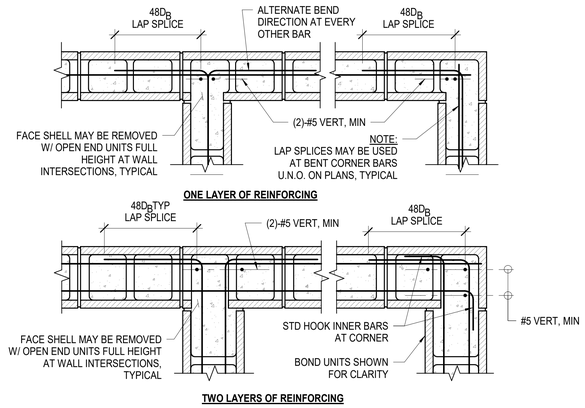

2 S-1.9 CONCRETE MASONRY WALL INTERSECTION
SCALE:N.T.S.

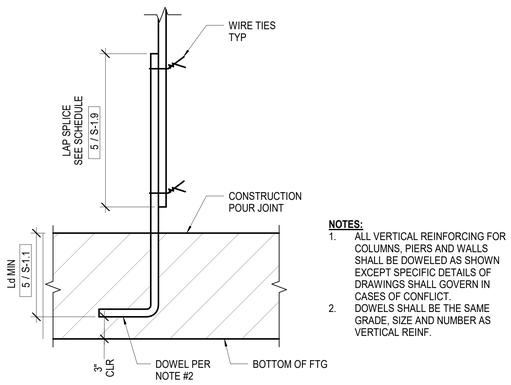

NOTES:
1. ALL VERTICAL REINFORCING FOR COLUMNS, PIERS AND WALLS SHALL BE DOWELED AS SHOWN EXCEPT SPECIFIC DETAILS OF DRAWINGS SHALL GOVERN IN CASES OF CONFLICT.
2. DOWELS SHALL BE THE SAME GRADE, SIZE AND NUMBER AS VERTICAL REINF.

3 S-1.9 TYPICAL DOWELS AT CMU WALL
SCALE:N.T.S.

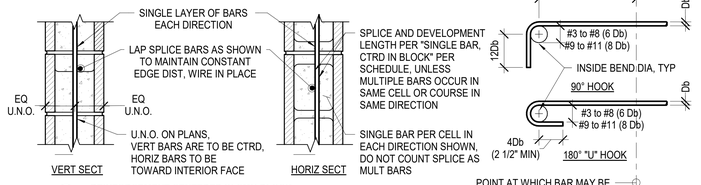

A REINFORCEMENT CENTERED IN CMU BLOCK

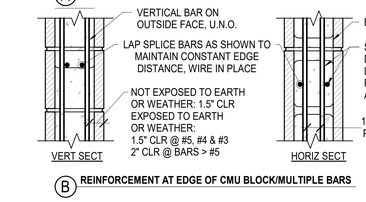

B REINFORCEMENT AT EDGE OF CMU BLOCK/MULTIPLE BARS

C STD HOOKS

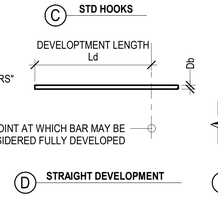

D STRAIGHT DEVELOPMENT

BAR SIZE	STD HOOK Le (IN)	48 D_b (IN)	L_d (IN)	LAP SPLICE (IN) U.N.O.
CMU WITH f'm=2,000 PSI (MIN) #3	4	18	18	18
#4	6	24	30	30
#5	8	30	46	46
#6	9	36	64	54
#7	11	42	87	63
#8	12	48	114	72
#9	14	55	145	81

NOTES:
1. VALUES SHOWN ARE FOR GRADE 60 REINF DEVELOPED IN CMU.
2. REFER TO TYPICAL REINFORCEMENT DETAILS FOR INFO NOT SHOWN, AND FOR DEVELOPMENT IN CONCRETE.
3. USE OF HYTEN COUPLER (OR EQ W/ ESR REPORT) IN LIEU OF LAP SPLICE @ CMU VERTICAL REINF ARE ACCEPTED. (ICC-ESR-4275)
4. WHERE NON-CONTACT SPLICES ARE USED, REINFORCEMENT SHALL NOT BE SPACED FARTHER APART THAN ONE-FIFTH THE REQUIRED LAP SPLICE NOR MORE THAN 8 INCHES APPART.
   - L_e = HOOK LENGTH
   - L_d = DEVELOPED LENGTH
   - D_b = REINFORCING BAR DIAMETER

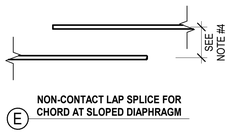

E NON-CONTACT LAP SPLICE FOR CHORD AT SLOPED DIAPHRAGM

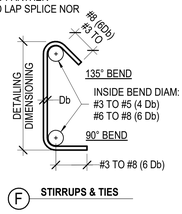

F STIRRUPS & TIES

5 S-1.9 MASONRY REINFORCEMENT DETAILS & DEVELOPMENT LENGTHS
SCALE:N.T.S.

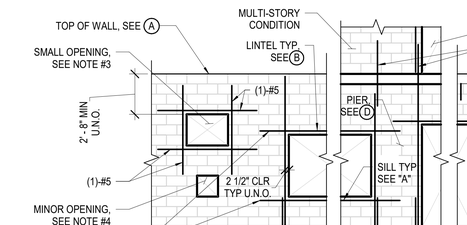

WALL ELEVATION

NOTES:
1. SEE PLANS FOR TYPICAL AND ADDITIONAL REINFORCEMENT.
2. FOR OPENINGS 36" OR LARGER IN WIDTH USE FULL HEIGHT JAMB BARS. EXTEND TO TOP OF WALL AT UPPER/SINGLE STORY, 48D MIN PAST FLOOR AND INTO FOOTING.
3. AT OPENINGS LESS THAN 36" IN WIDTH, EXTEND JAMB BARS 48D PAST EDGE OF OPENING.
4. FOR MINOR OPENINGS THAT DO NOT INTERRUPT TYPICAL REINFORCEMENT, ARE NO LARGER THAN 16" SQ, AND ARE AT LEAST 24" FROM ADJACENT OPENINGS OR WALL EDGE, NO ADDITIONAL REINFORCEMENT IS REQ'D U.N.O. ON PLANS.
5. USE A TYPICAL LAP SPLICE U.N.O. ON PLANS.
6. WHERE FULL EXTENSION IS NOT POSSIBLE, EXTEND BARS AS FAR AS POSSIBLE AND USE A STANDARD HOOK.
7. EXTEND LINTEL AND SILL BARS 48D MINIMUM PAST EDGE OF OPENING.
8. AT FULL HEIGHT JAMB BARS, THE WEB AND SHELL MAY BE REMOVED TO FACILITATE INSTALLATION. THE CONTRACTOR SHALL ENSURE THAT GROUTING WILL NOT BE COMPROMISED IF THIS OPTION IS USED.

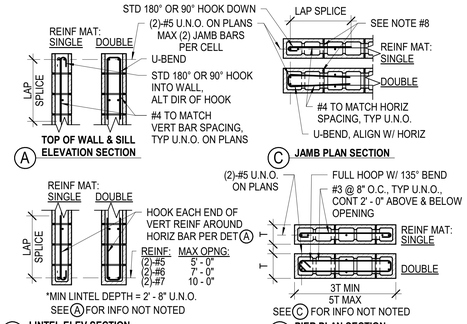

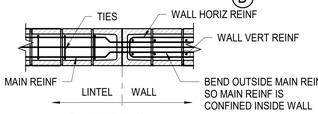

E LINTEL PLAN

7 S-1.9 TYPICAL MINIMUM REINFORCEMENT FOR MASONRY OPENINGS
SCALE:N.T.S.

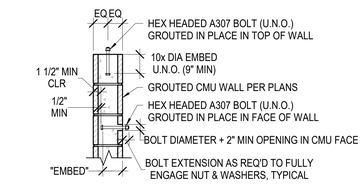

MINIMUM EMBEDMENT TABLE					
DIAMETER OF BOLTS IN INCHES	1/2	5/8	3/4	7/8	1
EMBEDMENT IN INCHES (EMBED)	4	5	6	7	8
MIN CMU WALL THICKNESS (INCHES)	6"	8"	8"	10"	12"

NOTES:
1. BOLTS CAST-IN MASONRY SHALL BE GROUTED IN PLACE WITH 1" OF GROUT BETWEEN BOLT AND MASONRY.
2. BOLTS SHALL BE A307 HEADED MACHINE BOLTS OR A36 ROD W/ TACK WELDED HEX NUT.
3. UNLESS DETAILED ON PLANS, DO NOT PLACE BOLTS IN FACE OF WALL < 12x DIA FROM OPENINGS OR EDGES WITHOUT APPROVAL FROM SEOR.

9 S-1.9 HEADED BOLT GROUTED IN CMU WALL
SCALE:N.T.S.
REF DET:10 / S-5.3

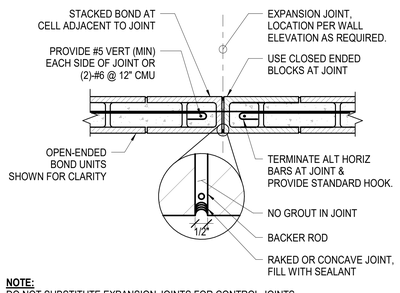

NOTE:
DO NOT SUBSTITUTE EXPANSION JOINTS FOR CONTROL JOINTS. EXPANSION JOINTS PROVIDE COMPLETE STRUCTURAL DISCONTINUITY, USE ONLY WHERE SPECIFICALLY NOTED ON THE PLANS.

10 S-1.9 TYP CMU WALL EXPANSION JOINT (E.J.)
SCALE:N.T.S.

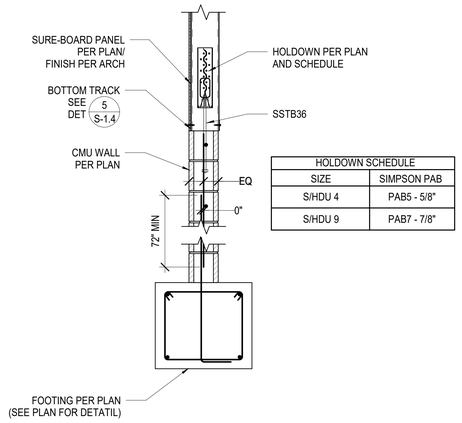

HOLDOWN SCHEDULE	
SIZE	SIMPSON PAB
S/HDU 4	PAB5 - 5/8"
S/HDU 9	PAB7 - 7/8"

11 S-1.9 HOLDOWN @ CMU
SCALE:N.T.S.
REF DET:17 / S-3.2

PREPARED BY:
MCA ENGINEERS INC
CIVIL • STRUCTURAL
MBE • DBE • SBE
2151 Michelson Dr. #240
Irvine, CA 92612
Tel. 949.679.0870
Fax. 949.679.9370
Project No.: I699

REVISIONS			
NO.	DESCRIPTION	DATE	APPROVED
1	90%CD SUBMITTAL	12/15/2022	
2	100%CD SUBMITTAL	05/01/2023	
3	FINAL SUBMITTAL	06/30/2023	

B.M.: THE CITY OF GARDENA BENCHMARK NO. SD-15 ELEV. = 43.508'

CITY OF GARDENA
DEPARTMENT OF PUBLIC WORKS - ENGINEERING
TYPICAL DETAILS-CMU
COMMUNITY AQUATICS & SENIOR CENTER
S-1.9

	INITIAL	DATE
DESIGNED BY	AQ	05/01/23
DRAWN BY	AN	06/29/23
CHECKED BY	YN	06/29/23

APPROVED BY:
APPROVED BY: DIRECTOR OF PUBLIC WORKS
SHT. 95 OF 195
DWG. NO. 5-2606

BELL GARDENS AQUATICS CENTER - 90% CONSTRUCTION DOCUMENTS
PLOT DATE: 6/30/2023 10:04:48 AM
FILE NAME: G:\2021\I699\Drawings\Construction\S01-Standards A&E

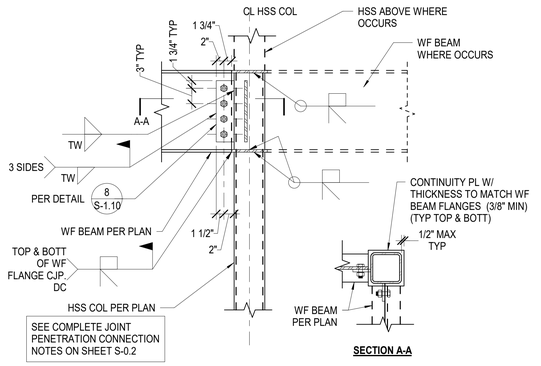

1 S-1.10 WF BEAM TO HSS COL MOMENT CONNECTION

SCALE:N.T.S.

REF DET:8 / S-1.10

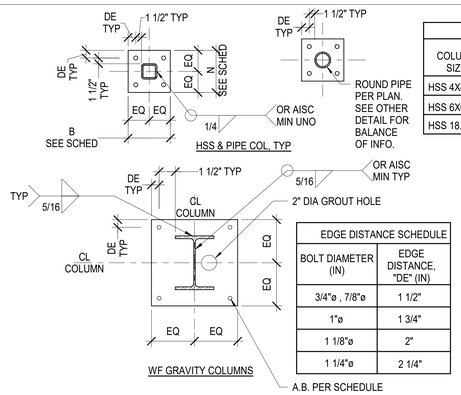

EDGE DISTANCE SCHEDULE	
BOLT DIAMETER (IN)	EDGE DISTANCE, "DE" (IN)
3/4"ø , 7/8"ø	1 1/2"
1"ø	1 3/4"
1 1/8"ø	2"
1 1/4"ø	2 1/4"

COLUMN BASE PLATE SCHEDULE						
COLUMN SIZE	BASE PLATE			ANCHOR ROD		REMARKS
	B (in)	N (in)	t (in)	DIA	EMBED(in)	
HSS 4X4	10	10	3/4	(4)-3/4"ø	12"	ASTM F1554 GR36 HEAVY HEX HEAD
HSS 6X6	12	12	1 1/4	(4)-3/4"ø	12"	ASTM F1554 GR36 HEAVY HEX HEAD
HSS 18.0X0.375	24	24	1 1/4	(4)-3/4"ø	16"	ASTM F1554 GR36 HEAVY HEX HEAD

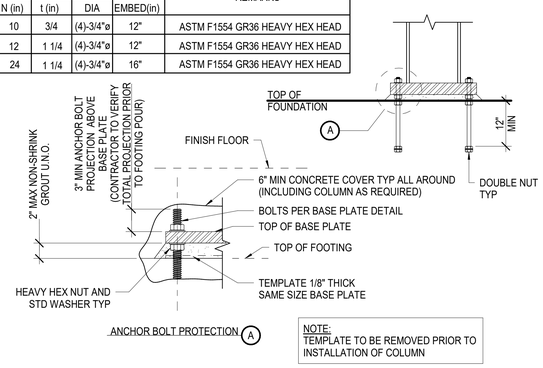

NOTE:
TEMPLATE TO BE REMOVED PRIOR TO INSTALLATION OF COLUMN

2 S-1.10 GRAVITY COLUMN BASE PLATE DETAIL

SCALE:N.T.S.

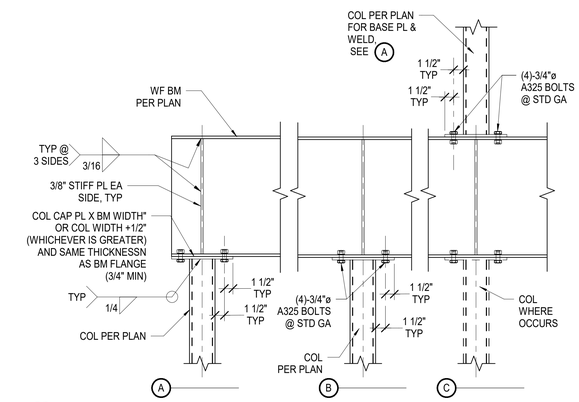

4 S-1.10 WF BEAM TO COL

SCALE:N.T.S.

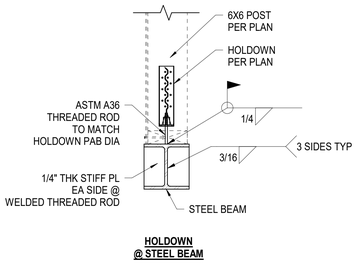

HOLDOWN @ STEEL BEAM

5 S-1.10 HOLDOWN @ STEEL BEAM

SCALE:N.T.S.

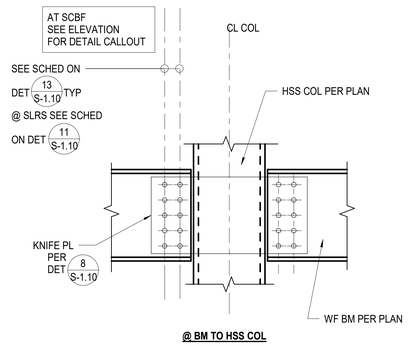

@ BM TO HSS COL

6 S-1.10 TYPICAL BEAM TO COLUMN CONNECTION

SCALE:N.T.S.

REF DET:12 / S-1.10

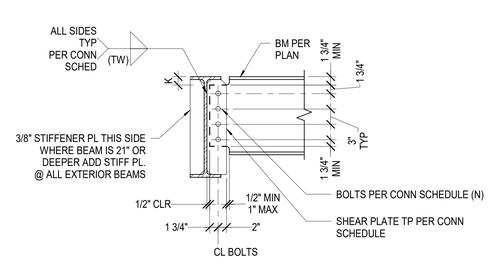

NOTE:
1. USE STANDARD BOLT HOLES

ONE-SIDED CONNECTION OCCURS WHERE OPPOSITE BEAMS ARE OFFSET BY 12" OR MORE

BEAM ONE SIDE

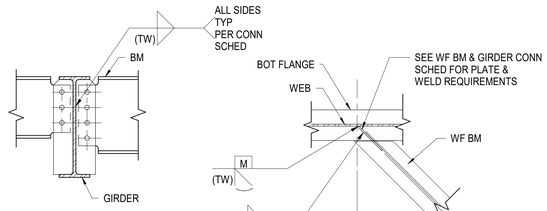

BEAM EACH SIDE

FOR ITEMS NOT SHOWN OR NOTED SEE "BEAM ONE SIDE"

TYP WF BEAM TO WF BEAM

PLAN VIEW

SKEWED BEAM CONNECTION

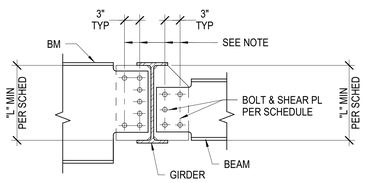

DROP BEAM OR DEEPER BEAM THAN GIRDER CONNECTION

NOTE:
WHERE NUMBER OF REQUIRED BOLTS PER PLAN OR SCHEDULE ARE MORE THAN NUMBER OF BOLTS THAT FIT AT ONE ROW, USE MAXIMUM BOLTS AT FIRST ROW & BALANCE IN SECOND ROW (2 BOLTS MIN AT SECOND ROW).

WF BEAM & GIRDER CONNECTION SCHEDULE				
WF BM	(N) A325N BOLTS U.N.O.	(L) MIN PLATE / WELD LENGTH	(TP) MIN PLATE THICKNESS	(TW)[1] MIN WELD THICKNESS
W8	(2) 3/4"ø	5 1/2"	3/8"	1/4"
W10	(2) 3/4"ø	6"	3/8"	1/4"
W12	(3) 1"ø	9"	3/8"	1/4"
W14	(3) 1"ø	9"	3/8"	1/4"
W16	(4) 1"ø	12"	3/8"	1/4"
W18	(5) 1"ø	15"	1/2[2]	3/8"
W21,24	(6) 1"ø	18"	1/2[2]	3/8"
W27	(7) 1"ø	21"	1/2[2]	3/8"
W30	(8) 1"ø	24"	1/2[2]	3/8"
W33	(9) 1"ø	27"	1/2[2]	3/8"
W36	(10) 1"ø	31"	1/2[2]	3/8"

NOTES:
1. 5/16" MIN FOR COLUMN FLANGES GREATER THAN 3/4" THICK
2. PL 1/2" & THICKER SHALL BE GAS OR SAW CUT
3. ALL BOLT HOLES SHALL BE STD HOLES UNO.

13 S-1.10 TYPICAL BEAM TO BEAM CONNECTION

SCALE:N.T.S.

REF DET:6 / S-1.10

DRAG STRUT CONNECTION SCHEDULE				
MEMBER	CONN. PL THICKNESS "t" U.N.O.	# OF BOLTS A490 - SC PER ROW	NO. OF ROWS	WELD SIZE TW
W12-14	1/2"	3 - 1" DIA	SEE PLAN	3/8"
W16	3/4"	4 - 1" DIA		1/2"
W18	3/4"	5 - 1" DIA		1/2"
W21	3/4"	6 - 1" DIA		1/2"
W24	1"	6 - 1" DIA		3/4"
W27	1"	7 - 1" DIA		3/4"

NOTES:
1. FILLET WELDS INDICATED PER SCHEDULE SHALL BE REPLACED WITH COMPLETE PENETRATION GROOVE WELDS WHERE SKEWED BEAM CONNECTIONS WITH ANGLES SMALLER THAN 60° (BETWEEN BEAM AND GIRDER) OCCUR, TYP. U.N.O.
2. INSTALLATION OF HIGH STRENGTH BOLTS SHALL BE TESTED BY USING CALIBRATED WRENCH AS PER AISC SPECIFICATIONS. WRENCH SHALL BE CALIBRATED AT LEAST TWICE A DAY

11 S-1.10 DRAG STRUT CONNECTION SCHEDULE

SCALE:N.T.S.

REF DET:6 / S-1.10

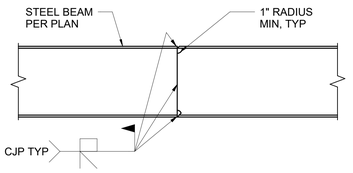

15 S-1.10 OPTIONAL SPLICE DETAIL

SCALE: 3/4" = 1'-0"

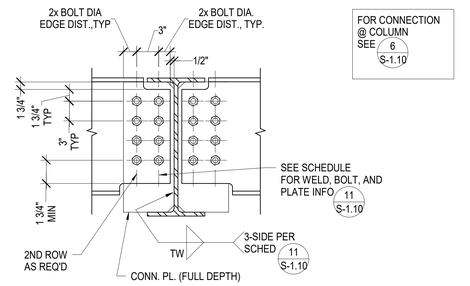

DRAG STRUT CONNECTION

12 S-1.10 DRAG STRUT CONNECTION AT GIRDER

SCALE:N.T.S.

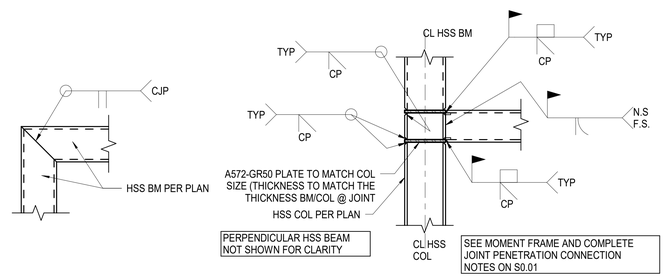

16 S-1.10 TYP HSS MOMENT CONNECTION

SCALE: 3/4" = 1'-0"

8 S-1.10 TYPICAL BEAM TO HSS COL

SCALE:N.T.S.

REF DET:1 / S-1.10

PREPARED BY:
MCA ENGINEERS INC
CIVIL ■ STRUCTURAL
2151 Michelson Dr. #240
Irvine, CA 92612
Tel. 949.679.0870
Fax. 949.679.9370
Project No.: I699

REVISIONS			
NO.	DESCRIPTION	DATE	APPROVED
1	90%CD SUBMITTAL	12/15/2022	
2	100%CD SUBMITTAL	06/01/2023	
3	FINAL SUBMITTAL	06/30/2023	

B.M.: THE CITY OF GARDENA BENCHMARK NO. SD-15 ELEV. = 43.506'

CITY OF GARDENA
DEPARTMENT OF PUBLIC WORKS - ENGINEERING

TYPICAL DETAILS-STEEL

COMMUNITY AQUATICS & SENIOR CENTER

S-1.10

	INITIAL	DATE
DESIGNED BY	AQ	05/01/23
DRAWN BY	AN	06/29/23
CHECKED BY	YN	06/29/23

APPROVED BY:

APPROVED BY: DIRECTOR OF PUBLIC WORKS

SHT. 96 OF 195 DWG. NO. 5-2606

BELL GARDENS AQUATICS CENTER - 90% CONSTRUCTION DOCUMENTS
PLOT TIME: 6/29/2023 3:07:58 PM
PLOT BY: Yen Nguyen
PLOT FILE: G:\2021\21038\Drawings\Comments 123\Gardena A4

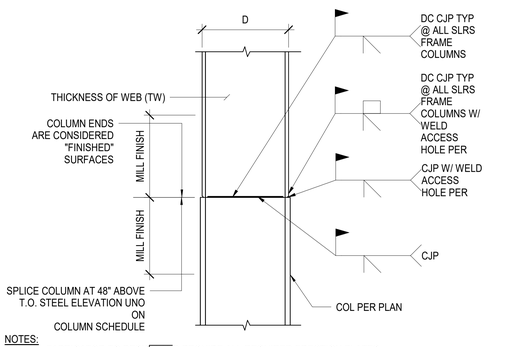

NOTES:
1. STEEL FABRICATOR TO DESIGN AND PROVIDE ALL REQUIRED ERECTION PLATES
2. FOR FINISHED SURFACES AT COLUMN ENDS SEE AISC "CODE OF STANDARD PRACTICE" SECTION 6.2.2.

SEE COMPLETE JOINT PENETRATION CONNECTION NOTES ON SHEET S-0.2

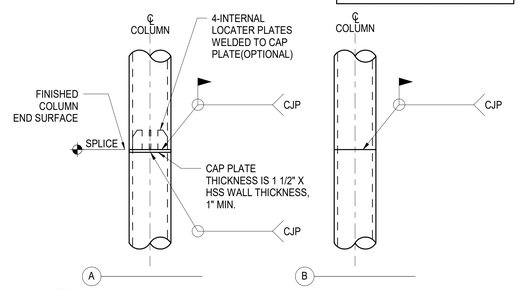

NOTES:

1. EITHER DETAIL (A) OR (B) MAY BE USED AT CONTRACTOR'S OPTION.
2. COLUMN SPLICES MAY BE SHOP WELDED AT CONTRACTOR'S OPTION. SEE COLUMN SCHEDULE FOR SPLICE LOCATIONS.

5 TYP COLUMN SPLICE U.N.O.

S-1.11 SCALE:N.T.S.

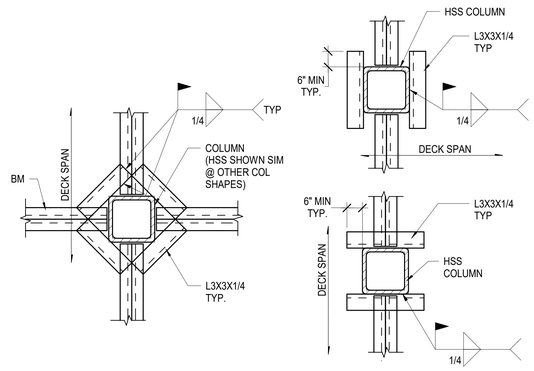

PROVIDE ANGLES AS REQ'D WHERE BEAMS DO NOT FRAME TO COL.

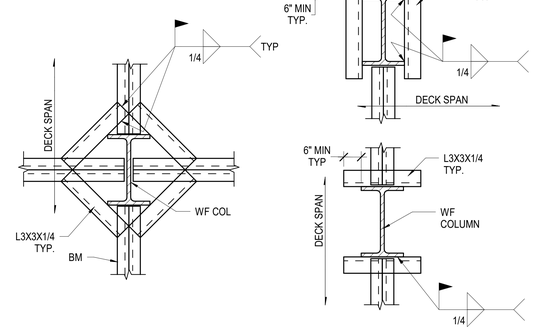

PROVIDE ANGLES AS REQ'D WHERE BEAMS DO NOT FRAME TO COL.

6 TYP DECK SUPPORT AT COLUMN

S-1.11 SCALE:N.T.S.

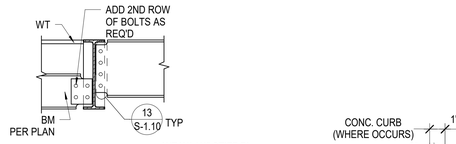

WT/ANGLE SCHED. (CUT VERTICAL LEG/WEB AS NEDED)

"d"	WT	ANGEL
2"	WT 2X6.5	L3x2x3/8 (LLH)
3"	WT 3X8	L3x3x3/8 (LLV)
4"	WT 4X10.5	L4x3x3/8 (LLV)
5"	WT X9.5	L5x3x3/8 (LLV)

NOTES:
1. PROVIDE WT/ANGLE WHERE NOTED ON PLAN. NOTE THAT WT IS NOT SHOWN ON PLAN.
2. WT/ANGLE TO MATCH BEAM/LEDGER tf, bf, tw.

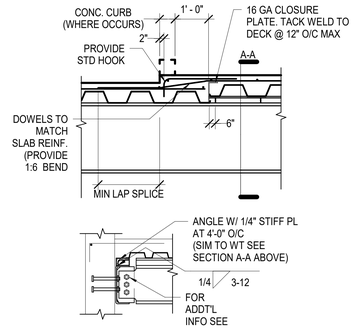

DETAIL AT LEDGER

7 DROPPED BEAM WITH WT/ANGLE

S-1.11 SCALE:N.T.S.
REF DET:11 / S-1.12

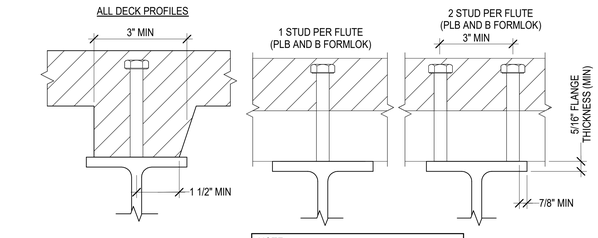

NOTE:
IF FLANGE IS < 5/16" THICK, THE STUD SHALL BE CENTERED OVER THE WEB

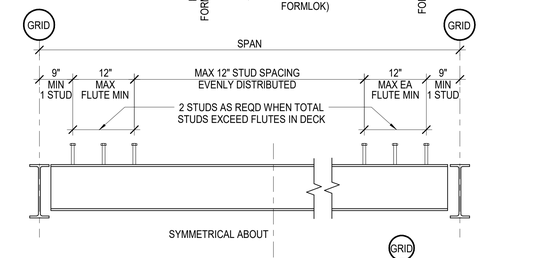

NOTES:
1. ALL WELDED STUDS SHALL BE 3/4"Ø x AS REQUIRED.
2. SPACE STUDS EVENLY ALONG LENGTH OF SPAN @ 12" (MAX) CENTERS.
3. NOT USED
4. WHERE DECKING IS PARALLEL TO BEAM, DISTRIBUTE STUDS SYMMETRICALLY IN SIMILAR MANNER TO THAT SHOWN AND NOTED IN DETAIL ABOVE.
5. SEE DET "A" HEREIN WHERE DECKING IS MODIFIED FOR SHEAR STUD

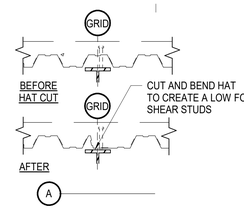

8 WELDED STUDS

S-1.11 SCALE:N.T.S.

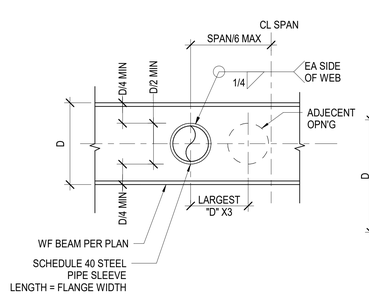

ROUND OPENING

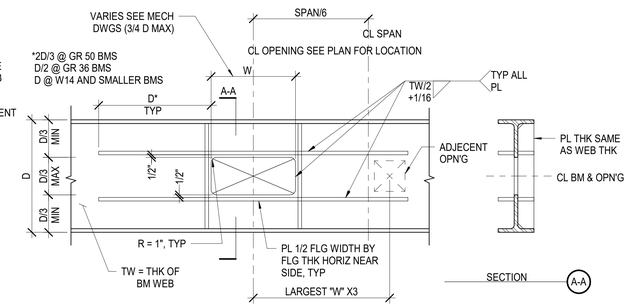

SQUARE OPENING

NOTES:
1. THIS DETAIL MAY NOT BE USED WITHOUT PRIOR WRITTEN APPROVAL OF SEOR & DSA.
2. CONTINUITY PLATES AND STIFFENERS SHALL BE 1/2 FLANGE WIDTH; GRADE SHALL MATCH BASE BEAM.
3. FLANGE & STIFFENER NOT REQD FOR 4" SQ HOLES & LESS IN W12 OR DEEPER.
4. WHERE ROUND OPENINGS ARE D/6 OR LESS, REINFORCING SHOWN IS NOT REQUIRED.

9 TYPICAL HOLE THRU STEEL BEAM WEB

S-1.11 SCALE:N.T.S.

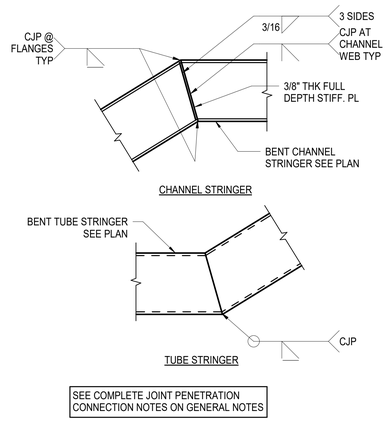

SEE COMPLETE JOINT PENETRATION CONNECTION NOTES ON GENERAL NOTES

11 TYPICAL BENT STRINGERS

S-1.11 SCALE:N.T.S.
REF DET:11 / S-5.2

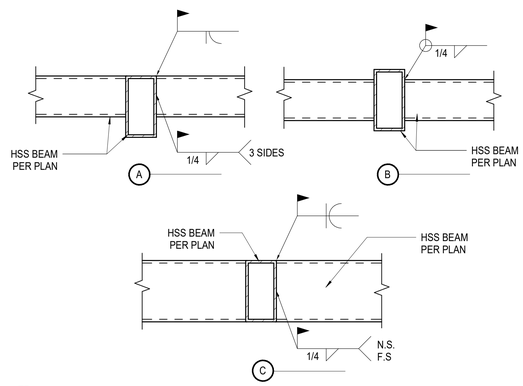

12 HSS BEAM TO HSS BEAM CONNECTION

S-1.11 SCALE:N.T.S.
REF DET:17 / S-3.1

PREPARED BY:

VCA ENGINEERS INC
CIVIL ▪ STRUCTURAL
2151 Michelson Dr. #240
Irvine, CA 92612
Tel. 949.679.0870
Fax. 949.679.9370
Project No.: I699

REVISIONS			
NO.	DESCRIPTION	DATE	APPROVED
1	90%CD SUBMITTAL	12/15/2022	
2	100%CD SUBMITTAL	05/01/2023	
3	FINAL SUBMITTAL	06/30/2023	

B.M.: THE CITY OF GARDENA BENCHMARK NO. SD-15 ELEV. = 43.508'

CITY OF GARDENA
DEPARTMENT OF PUBLIC WORKS - ENGINEERING
TYPICAL DETAILS-STEEL
COMMUNITY AQUATICS & SENIOR CENTER
S-1.11

	INITIAL	DATE
DESIGNED BY	AQ	05/01/23
DRAWN BY	AN	06/29/23
CHECKED BY	YN	06/29/23

APPROVED BY:
APPROVED BY: DIRECTOR OF PUBLIC WORKS
SHT. 97 OF 195 DWG. NO. 5-2606

REL GARDENS AQUATICS CENTER - 90% CONSTRUCTION DOCUMENTS
PLOT DATE: 6/30/2023 10:04:00 AM
PLOT NAME: C:\Users\YNishigaki\Documents\135 Gardena Aquatics Center_Central_YNishigaki.rvt

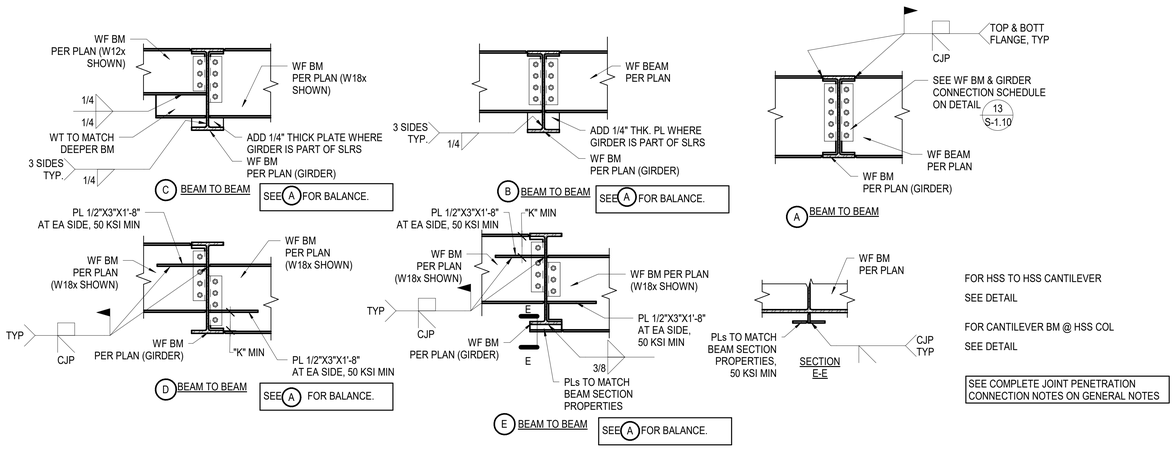

1 S-1.12 TYPICAL CANTILEVER BEAM CONNECTION

SCALE: N.T.S.

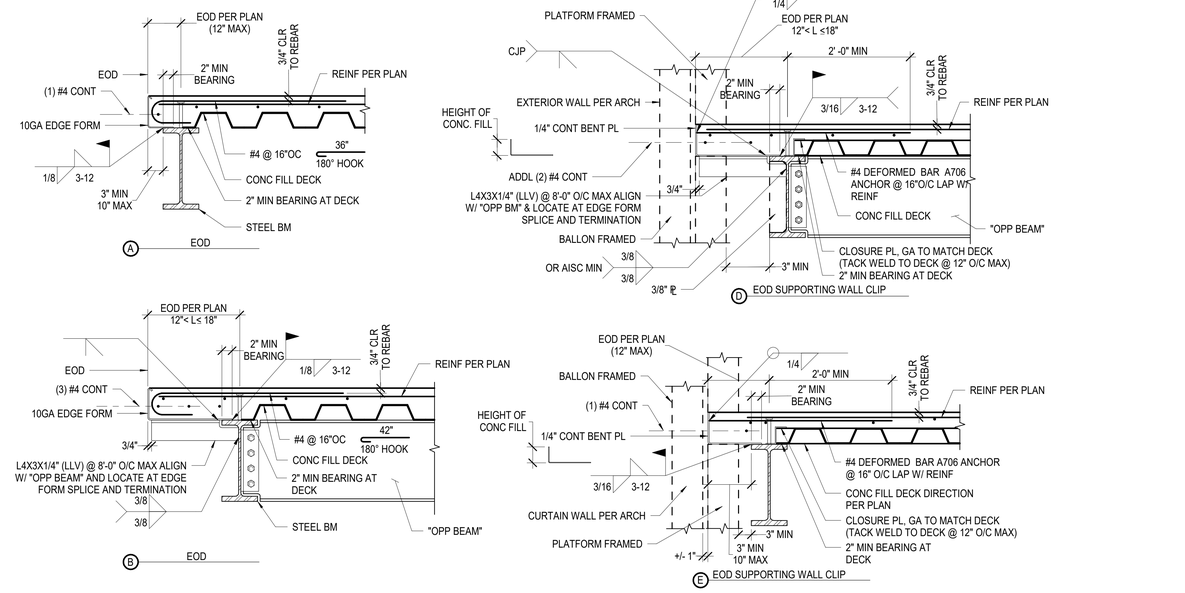

NOTE:
DO NOT USE (A) (B) (C) (F) WHERE CURTAIN WALL OR EXTERIOR STUD WALL ARE ATTACHED TO DECK EDGE.

9 S-1.12 EDGE OF CONC FILL DECK (EOD) AT FLOOR/ROOF

SCALE: 3/4" = 1'-0"

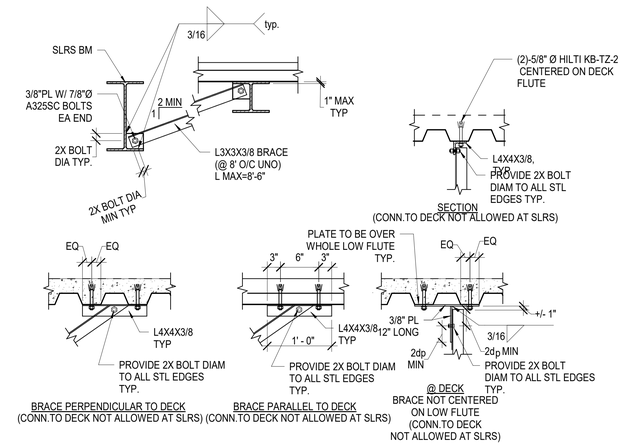

3 S-1.12 BEAM BOTTOM FLANGE BRACE DETAILS

SCALE: N.T.S.

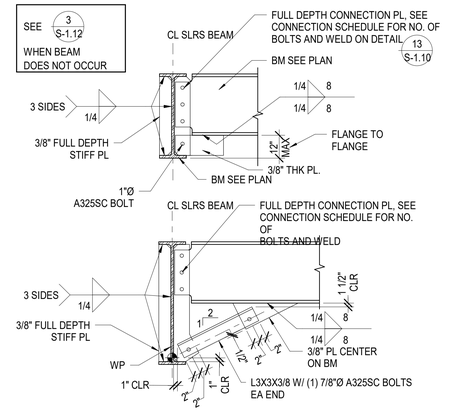

4 S-1.12 BEAM BOTTOM FLANGE BRACING DETAIL

SCALE: N.T.S.

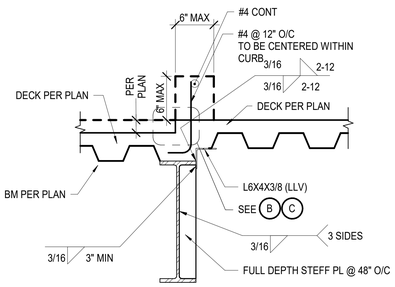

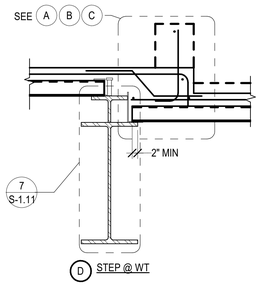

11 S-1.12 TYPICAL STEPPED SLAB

SCALE: N.T.S.

PREPARED BY:
MCA ENGINEERS INC
CIVIL ■ STRUCTURAL
2151 Michelson Dr. #240
Irvine, CA 92612
Tel. 949.679.0870
Fax. 949.679.9370
Project No.: I699

REVISIONS			
NO.	DESCRIPTION	DATE	APPROVED
1	90%CD SUBMITTAL	12/15/2022	
2	100%CD SUBMITTAL	06/01/2023	
3	FINAL SUBMITTAL	06/30/2023	

B.M.: THE CITY OF GARDENA BENCHMARK NO. SD-15
ELEV. = 43.508'

CITY OF GARDENA
DEPARTMENT OF PUBLIC WORKS - ENGINEERING
TYPICAL DETAILS-STEEL
COMMUNITY AQUATICS & SENIOR CENTER
S-1.12

	INITIAL	DATE
DESIGNED BY	AQ	05/01/23
DRAWN BY	AN	06/29/23
CHECKED BY	YN	06/29/23

APPROVED BY:
APPROVED BY: DIRECTOR OF PUBLIC WORKS
SHT. 98 OF 195 DWG. NO. S-2606

BELL GARDENS AQUATICS CENTER - 90% CONSTRUCTION DOCUMENTS
PLOT DATE: 6/29/2023 9:59:59 AM
PLOT BY: C:\Users\ANGELA\Documents\GARDENA\S-1.12 Typical Details-Steel.dwg
AM

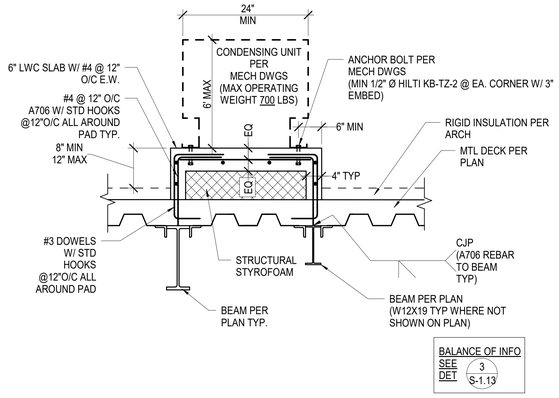

1 S-1.13 CONDENSING UNIT

SCALE:N.T.S.

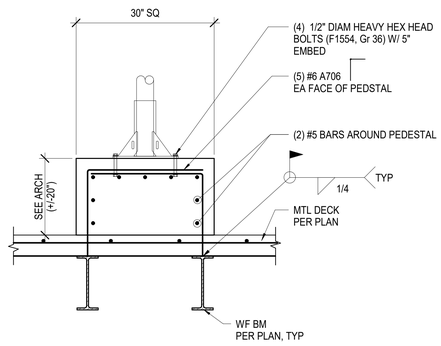

2 S-1.13 PAVIT CRANE SUPPORT

SCALE:N.T.S.

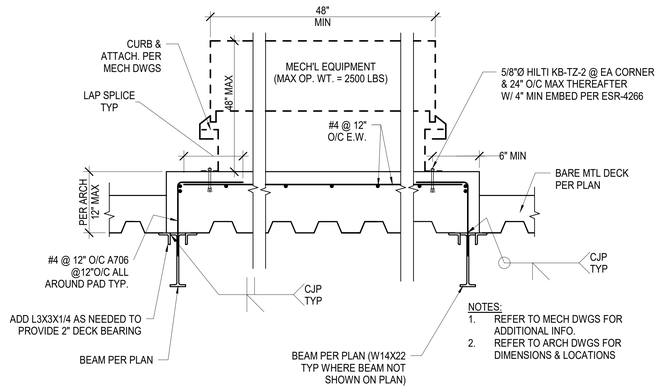

3 S-1.13 SECTION AT EQUIPMENT PAD

SCALE:N.T.S.
REF DET:1 / S-1.13

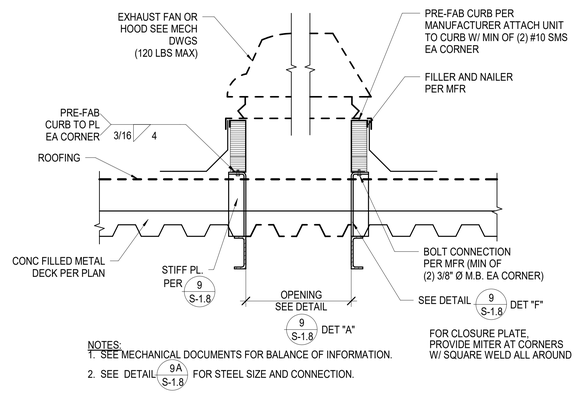

4 S-1.13 TYP EXHAUST FAN & INTAKE HOOD ANCHORAGE DETAIL

SCALE:N.T.S.

9 S-1.13 HANGER AND BRACE ATTACHMENT TO STRUCTURE

SCALE:N.T.S.
REF DET:8 / S-1.13

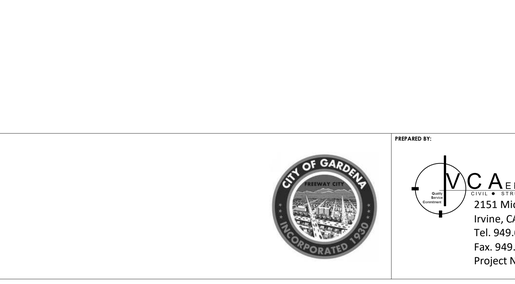

7 S-1.13 SOLAR FRAME SUPPORT

SCALE:N.T.S.

8 S-1.13 CEILING HANGER AT OBSTRUCTION

SCALE:N.T.S.

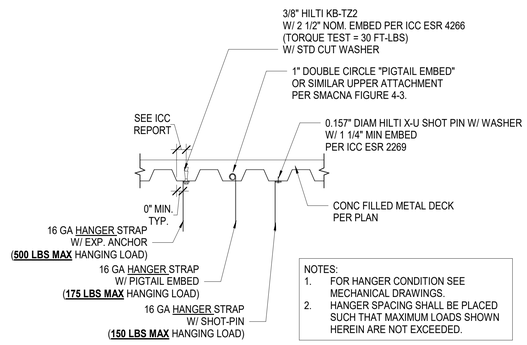

12 S-1.13 DUCT HANGER STRAP @ CONC FILLED DECK

SCALE:N.T.S.

PREPARED BY:
MCA ENGINEERS INC
CIVIL • STRUCTURAL
2151 Michelson Dr. #240
Irvine, CA 92612
Tel. 949.679.0870
Fax. 949.679.9370
Project No.: I699

B.M.: THE CITY OF GARDENA BENCHMARK NO. SD-15 ELEV. = 43.508'

REVISIONS

NO.	DESCRIPTION	DATE	APPROVED
1	90%CD SUBMITTAL	12/15/2022	
2	100%CD SUBMITTAL	05/01/2023	
3	FINAL SUBMITTAL	06/30/2023	

CITY OF GARDENA
DEPARTMENT OF PUBLIC WORKS - ENGINEERING
TYPICAL DETAILS-MEP SUPPORT
COMMUNITY AQUATICS & SENIOR CENTER
S-1.13

	INITIAL	DATE
DESIGNED BY	AQ	05/01/23
DRAWN BY	AN	06/29/23
CHECKED BY	YN	06/29/23

APPROVED BY:
APPROVED BY: DIRECTOR OF PUBLIC WORKS
SHT. 99 OF 195 DWG. NO. S-2606

BELL GARDENS AQUATICS CENTER - 90% CONSTRUCTION DOCUMENTS
PLOT DATE: 6/30/2023 10:29:39 AM
PLOT BY: Aai
FILE NAME: G:\Shared\Projects\I699 Bell Gardens Aquatics Center\Construction Documents\101-Gardena\S-1.13 Typical Details-MEP Support.dwg

FOUNDATION NOTES

1. FOR GENERAL NOTES, SEE S-0.# SERIES.
2. FOR TYPICAL DETAILS, SEE S-1.# SERIES.
3. NONE.
4. SF-# INDICATES SPREAD FOOTING. SEE SPREAD FOOTING SCHEDULE FOR ADDITIONAL INFO.

SPREAD FOOTING SCHEDULE					
MARK	DIMENSIONS			REINFORCEMENT	
	LENGTH	WIDTH	DEPTH	LONG	SHORT
SF-4	4' - 0"	4' - 0"	24"	(4)-#5 T&B	(4)-#5 T&B
SF-6.5	6' - 6"	6' - 6"	24"	(6)-#7 T&B	(6)-#7 T&B
SF-8	8' - 0"	8' - 0"	24"	(8)-#7 T&B	(8)-#7 T&B

5. DRAWING DATUM = 0'-0": REF. ELEV. +/- XXX.XX @ GROUND FLOOR FINISH FLOOR (SEE CIVIL & ARCH FOR ACTUAL ELEVATION)
6. FOR WALL FOOTING THRU / TERMINATION DETAIL SEE 11 / S-1.10
7. TYPICAL SLAB ON GRADE UNDERLAYMENT:
   SLAB SHALL BE UNDERLAIN BY 4 INCHES OF SAND LAYER
   OVER 15 MIL MOISTURE BARRIER
   CONTRACTOR TO PROTECT VAPOR BARRIER FROM PUNCTURE.
8. FOR SLAB SAWCUT AND CONTROL JOINT, SEE DETAIL 16 / S-1.1
   & FOR TYPICAL SLAB EDGE, SEE 9 / S-1.1
9. UNDERGROUND UTILITY NOTE:
   CONTRACTOR SHALL COORDINATE ALL NEW AND EXISTING UTILITIES PRIOR TO ANY FOUNDATION WORK PER 9 / S-1.2 & 5 / S-1.2
   STEP FOOTINGS AS REQUIRED PER DETAIL 8 / S-1.2
   @ SLRS FRAMES, STEPS NOT NOTED HEREIN REQUIRE SEOR & DSA APPROVAL.
   WHERE ADDITIONAL STEPS ARE REQUIRED, NOTIFY SEOR.
10. INDICATES STEP IN FOOTING PER DETAIL 8 / S-1.2 @ SLRS FRAMES, STEPS NOT NOTED HEREIN REQUIRE SEOR & DSA APPROVAL.
11. INDICATES DEPRESSED SLAB. SEE DETAIL 9 / S-1.1 REFER TO ARCHT'L DRAWINGS FOR ADDITIONAL INFORMATION.
12. SHOWS ELEVATION OF FRAME ELEVATION
13. FOR FOUNDATION CROSSINGS / OVERLAPS SEE DET. 2 / S-1.3 , 3 / S-1.3 & 5 / S-1.3

13.1 FOR STEEL COLUMN BASE PLATES, SEE DET. 2 / S-1.10

14. CONC. MASONRY WALL SEE ELEV FOR ADDITIONAL INFOMATION.
15. WF-# INDICATES WALL FOOTING.

WALL FOOTING SCHEDULE				
MARK	DIMENSIONS		REINFORCEMENT	#4 TIES @ 12" O.C., U.N.O.
	WIDTH	DEPTH		
WF-1.5	1' - 6"	24"	(3)-#5 T&B	ALT. CAP
WF-2	2' - 0"	24"	(3)-#5 T&B	
WF-2.5	2' - 6"	24"	(3)-#5 T&B	
WF-3	3' - 0"	24"	(4)-#5 T&B	
WF-4	4' - 0"	24"	(5)-#5 T&B	
WF-5	5' - 0"	24"	(5)-#5 T&B	
WF-10	10' - 0"	24"	(10)-#5 T&B	

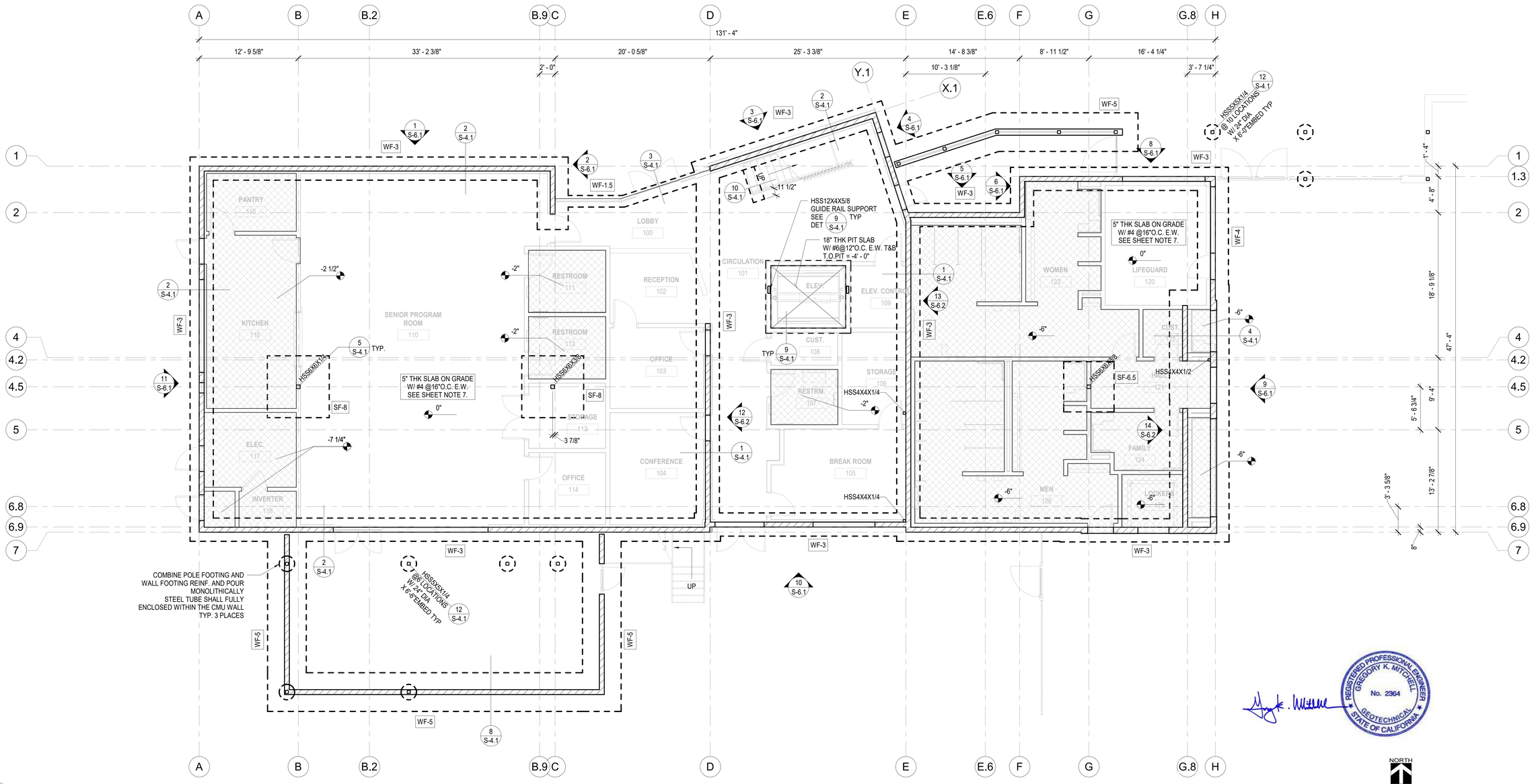

REGISTERED PROFESSIONAL ENGINEER GREGORY K. MITCHELL No. 2364 GEOTECHNICAL STATE OF CALIFORNIA

NORTH

1 S-2.1 **FOUNDATION PLAN**
SCALE: 3/16" = 1'-0"
REF DET'l S-6.1

PREPARED BY:
MCA ENGINEERS INC
CIVIL • STRUCTURAL
2151 Michelson Dr. #240
Irvine, CA 92612
Tel. 949.679.0870
Fax. 949.679.9370
Project No.: I699

REVISIONS			
NO.	DESCRIPTION	DATE	APPROVED
1	90%CD SUBMITTAL	12/15/2022	
2	100%CD SUBMITTAL	05/01/2023	
3	FINAL SUBMITTAL	06/30/2023	
4	ADDENDUM #2	08/25/2023	

B.M.: THE CITY OF GARDENA BENCHMARK NO. SD-15
ELEV. = 43.508'

CITY OF GARDENA
DEPARTMENT OF PUBLIC WORKS - ENGINEERING
FOUNDATION PLAN
COMMUNITY AQUATICS & SENIOR CENTER
S-2.1

	INITIAL	DATE
DESIGNED BY	AQ	05/01/23
DRAWN BY	AN	06/29/23
CHECKED BY	YN	06/29/23

APPROVED BY:
APPROVED BY: DIRECTOR OF PUBLIC WORKS
SHT. 100 OF 195 DWG. NO. S-2606

BELL GARDENS AQUATICS CENTER - 90% CONSTRUCTION DOCUMENTS
PLOT DATE: 6/30/2023 9:39:57 AM
PLOT BY: Yen Nguyen
FILE NAME: G:\2021\I699\Drawings\Documents\S1-Gardena\S-2.1 Foundation Plan.dwg

SHEET NOTES

1. SEE S-2.1 FOR FOUNDATION NOTES.
2. SEE S-3.2 FOR ROOF FRAMING NOTES.
3. WF-# INDICATES WALL FOOTING.

WALL FOOTING SCHEDULE				
MARK	DIMENSIONS		REINFORCEMENT	#4 TIES @ 12" O.C., U.N.O.
	WIDTH	DEPTH		
WF-2	2' - 0"	24"	(3)-#5 T&B	ALT. CAP

DECK SCHEDULE

DECK MARK	TYPE	GAGE	I (IN4/FT)	S (TOP +) (IN3/FT)	S (BOT -) (IN3/FT)	TOTAL DEPTH(IN)	CONC FILL TYPE	REINF.	WELDED STUDS	SIDE-SEAM ATTACHMENT	ATTACHMENT PATTERN
D3	VERCO HSB-36 IAPMO 2018	18	0.302	0.314	0.401	1.5"	BARE DECK	#3 @ 12" O/C E.W.	3/4 DIA. X 4 1/2" FN HT @ 12" O/C	TOP SEAM WELD @ 24" O/C	36/4

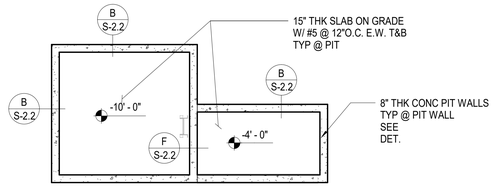

1 S-2.2 POOL BLDG PIT FOUNDATION PLAN

SCALE: 3/16" = 1'-0"
REF DET:1 / S-6.1

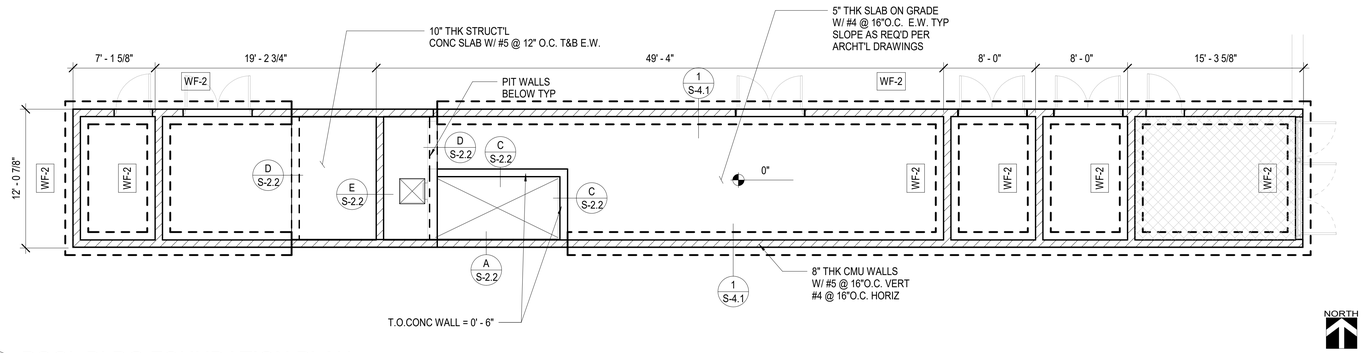

2 S-2.2 POOL BLDG FOUNDATION PLAN

SCALE: 3/16" = 1'-0"
REF DET:1 / S-6.1

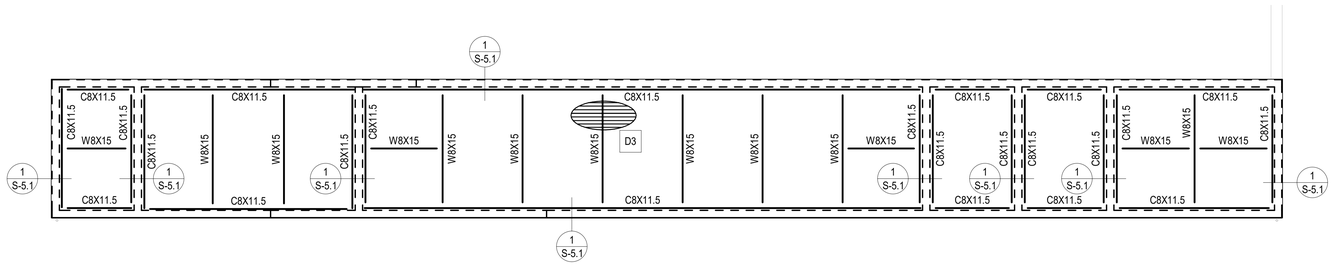

3 S-2.2 POOL BLDG ROOF FRAMING PLAN

SCALE: 3/16" = 1'-0"
REF DET:1 / S-6.1

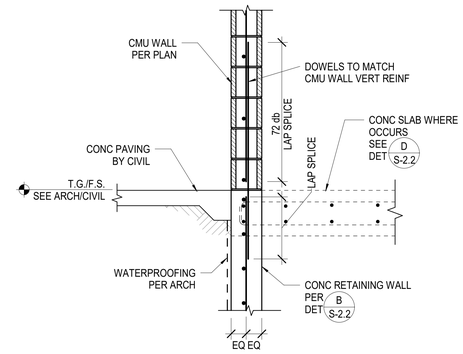

A S-2.2 PIT WALL TRANSITION DETAIL

SCALE: 3/4" = 1'-0"
REF DET:2 / S-2.2

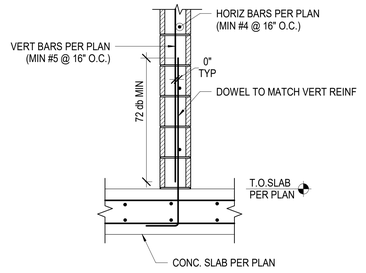

E S-2.2 CMU WALL OVER CONC SLAB

SCALE: 3/4" = 1'-0"
REF DET:2 / S-2.2

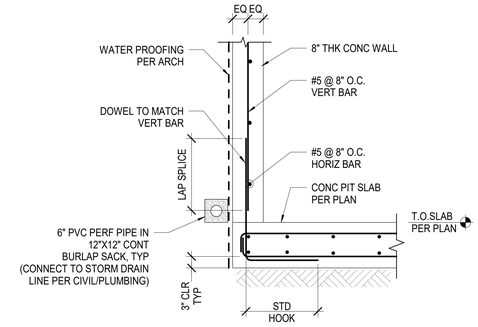

B S-2.2 BOTTOM OF PIT WALL

SCALE: 3/4" = 1'-0"
REF DET:1 / S-2.2

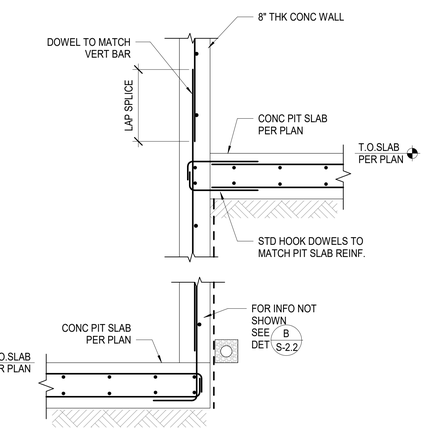

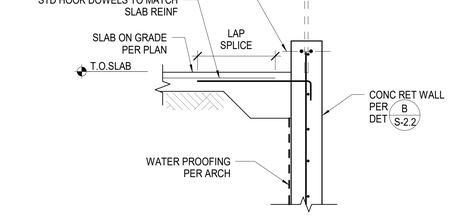

F S-2.2 PIT DEPTH CHANGE

SCALE: 3/4" = 1'-0"
REF DET:1 / S-2.2

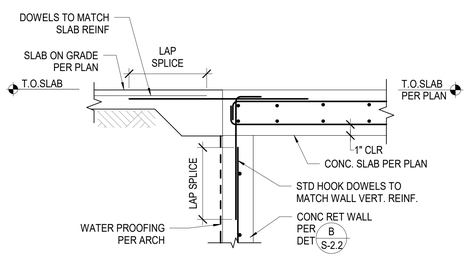

C S-2.2 PIT WALL AT OPENING

SCALE: 3/4" = 1'-0"
REF DET:2 / S-2.2

D S-2.2 PIT WALL WITH SLAB

SCALE: 3/4" = 1'-0"
REF DET:2 / S-2.2

REGISTERED PROFESSIONAL ENGINEER GREGORY K. MITCHELL No. 2364 GEOTECHNICAL STATE OF CALIFORNIA

PREPARED BY:
VCA ENGINEERS INC
CIVIL ● STRUCTURAL
2151 Michelson Dr. #240
Irvine, CA 92612
Tel. 949.679.0870
Fax. 949.679.9370
Project No.: I699

REVISIONS			
NO.	DESCRIPTION	DATE	APPROVED
1	90%CD SUBMITTAL	12/15/2022	
2	100%CD SUBMITTAL	05/01/2023	
3	FINAL SUBMITTAL	06/30/2023	

B.M.: THE CITY OF GARDENA BENCHMARK NO. SD-15 ELEV. = 43.008'

CITY OF GARDENA
DEPARTMENT OF PUBLIC WORKS - ENGINEERING
POOL BLDG FOUNDATION & ROOF FRAMING PLAN
COMMUNITY AQUATICS & SENIOR CENTER
S-2.2

	INITIAL	DATE
DESIGNED BY	AQ	05/01/23
DRAWN BY	AN	06/29/23
CHECKED BY	YN	06/29/23

APPROVED BY:
APPROVED BY: DIRECTOR OF PUBLIC WORKS
SHT. 101 OF 195 DWG. NO. S-2606

REL GARDENS AQUATICS CENTER - 90% CONSTRUCTION DOCUMENTS
PLOT DATE: 6/30/2023 3:09:58 PM Plotted By: Aaron Nguyen File Name: C:\Users\anguyen\Desktop\Documents\101 Gardena Aquatics\Drawings\S-2.2 Foundation & Roof Framing Plan.dwg

FLOOR FRAMING NOTES:

1. FOR GENERAL NOTES, SEE S-00# SERIES.
2. FOR TYPICAL DETAILS, SEE S-1## SERIES, SEE REFERENCES BELOW.
3. NOT USED.
4. DECK PER DECK SCHEDULE ON THIS SHEET. SEE [2 / S-1.8] FOR ADDITIONAL INFORMATION.
5. SEE PLAN FOR T.O.S. NOTE, COORDINATE T.O.S. NOTED WITH ARCHITECTURAL DRAWINGS
6. FOR TYPICAL BEAM TO BEAM CONNECTIONS, SEE DETAIL LEGEND.
7. CANTILEVER BEAM MOMENT CONNECTION SEE DETAIL [1 / S-1.12]
8. COLUMNS : SEE FLOORS BELOW FOR SIZES NOT NOTED HERE IN.
9. BEAM SPLICE. SEE DETAIL [15 / S-1.10] & [11 / S-1.11]
10. INDICATES BOLT CONNECTION AT SLRS SEE DETAIL [12 / S-1.10] BEAMS WITH THIS SYMBOL ARE PART OF THE SLRS.

INDICATES (2) ROWS OF A490SC,
NDICATES (1) ROW OF A490SC,

11. ALL STEEL BEAMS SHALL HAVE WELDED STUDS. SEE DETAIL [8 / S-1.11]
12. AT ALL SLRS BEAMS PROVIDE BRACING @ 8' - 0" O.C. MAX PER DETAIL [4 / S-1.12]
13. DENOTES FLOOR/ROOF PENETRATION. FOR TRIM REINF SEE DETAIL [8 / S-1.8] SEE ARCHT'L / MEP DRAWINGS FOR ACTUAL LOCATION AND ADDITION INFO AND ADDITIONAL PENETRATIONS NOT SHOWN IN THESE DRAWINGS
14. INDICATES DEPRESSED SLAB. SEE DETAIL [9 / S-1.1] REFER TO ARCHT'L DRAWINGS FOR ADDITIONAL INFORMATION.
15. * NEXT TO BEAM SIZE INDICATES LOWERED BEAM AROUND DEPRESSED AREA SEE [7 / S-1.11] FOR BEAM WITH WT SECTION. NOTE: DOUBLE LINE DENOTES EXTENT OF WT.
16. DENOTES SLOPING METAL DECK (SLOPE PER ARCHT'L) W/ 2" LWC TOPPING SLAB W/ 6X6XD1.4XD1.4 WELDED WIRE MESH OVER WATERPROOFING OVER SCREEDING LAYER. FOR TYP SECTION SEE ARCHT'L DETAIL [x / A- x]
17. ALL LEDGERS (C12x) ARE PART OF THE SLRS.

DECK SCHEDULE

DECK MARK	TYPE	GAGE	I (IN4/FT)	S (TOP +) (IN3/FT)	S (BOT -) (IN3/FT)	TOTAL DEPTH(IN)	CONC FILL TYPE	REINF.	WELDED STUDS	SIDE-SEAM ATTACHMENT	ATTACHMENT PATTERN
D1	VERCO W2 IAPMO 2018	18	0.564	0.471	0.481	5"	LWC	#3 @ 12" O/C E.W.	3/4 DIA. X 4 1/2" FN HT @ 12" O/C	TOP SEAM WELD @ 24" O/C	36/4
D2	HSB 36 IAPMO 2018	18	0.306	0.314	0.331	1 1/2"	BARE	-	-	TOP SEAM WELD @ 6" O/C	36/4
D3	VERCO HSB-36 IAPMO 2018	18	0.302	0.314	0.401	1.5"	BARE DECK	#3 @ 12" O/C E.W.	3/4 DIA. X 4 1/2" FN HT @ 12" O/C	TOP SEAM WELD @ 24" O/C	36/4
D4	VERCO 2.0D IAPMO 2018	18	0.792	0.587	0.576	5"	LWC	#3 @ 12" O/C E.W.	3/4 DIA. X 4 1/2" FN HT @ 12" O/C	TOP SEAM WELD @ 24" O/C	24.5/8

TYPICAL BM TO BM & BM TO COL. LEGEND

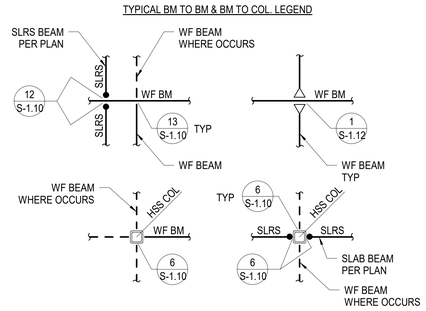

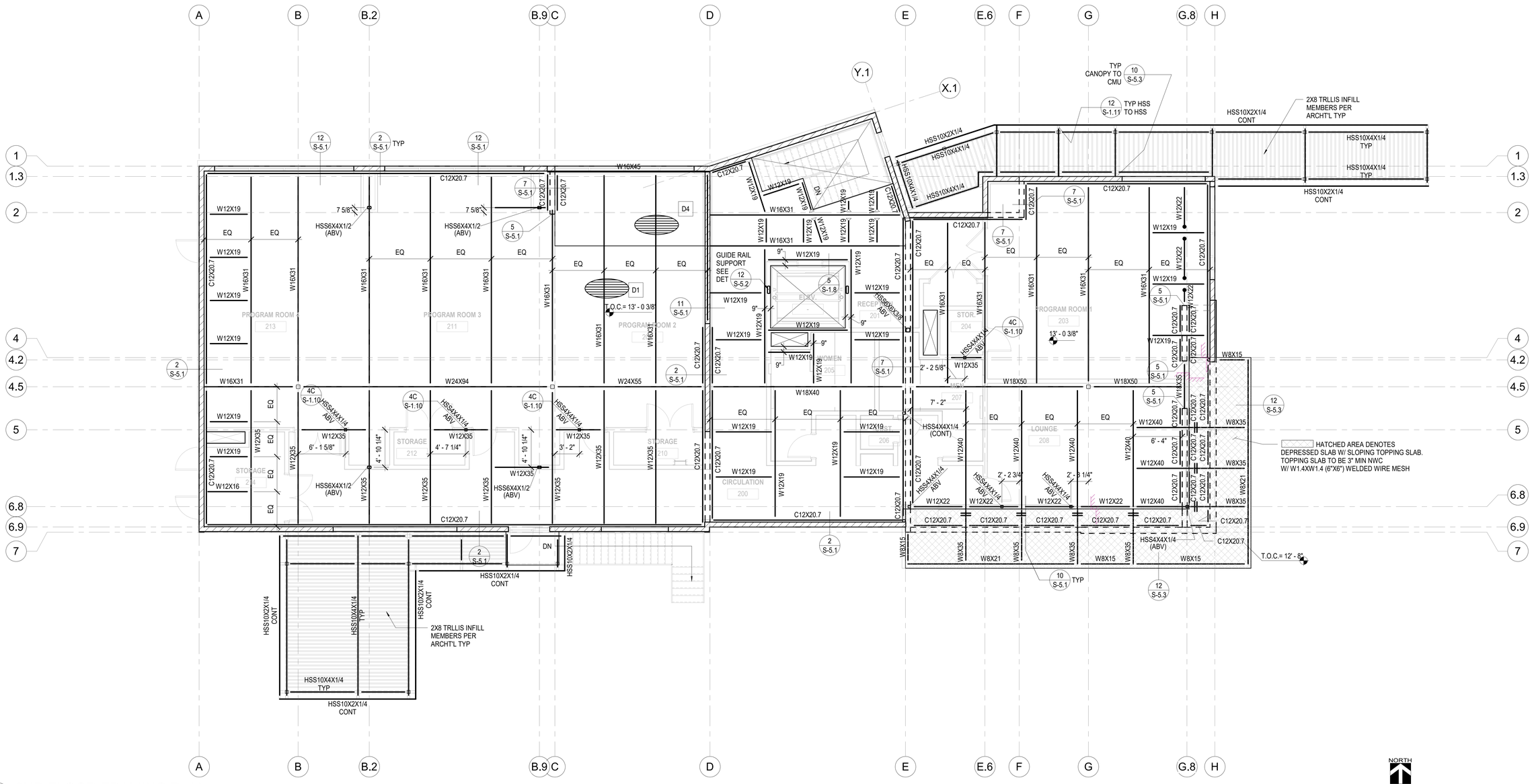

1 S-3.1 2ND FLOOR FRAMING PLAN

SCALE: 3/16" = 1'-0"

REF DET.1 / S-6.1

PREPARED BY:
MCA ENGINEERS INC
CIVIL • STRUCTURAL
2151 Michelson Dr. #240
Irvine, CA 92612
Tel. 949.679.0870
Fax. 949.679.9370
Project No.: I699

REVISIONS			
NO.	DESCRIPTION	DATE	APPROVED
1	90%CD SUBMITTAL	12/15/2022	
2	100%CD SUBMITTAL	05/01/2023	
3	FINAL SUBMITTAL	06/30/2023	
4	ADDENDUM #2	08/25/2023	

B.M.: THE CITY OF GARDENA BENCHMARK NO. SD-15 ELEV. = 43.508'

CITY OF GARDENA
DEPARTMENT OF PUBLIC WORKS - ENGINEERING

SECOND FLOOR FRAMING PLAN

COMMUNITY AQUATICS & SENIOR CENTER

S-3.1

	INITIAL	DATE
DESIGNED BY	AQ	05/01/23
DRAWN BY	AN	06/29/23
CHECKED BY	YN	06/29/23

APPROVED BY:

APPROVED BY: DIRECTOR OF PUBLIC WORKS

SHT. 102 OF 195 DWG. NO. S-2606

REL GARDENA AQUATICS CENTER - 90% CONSTRUCTION DOCUMENTS
REF FILE: C:\Users\yasmin.nasr\Documents\191-Gardena Aquatics Center_Central_yasmin.nasr.rvt

ROOF FRAMING NOTES:

1. FOR GENERAL NOTES, SEE S-00# SERIES.
2. FOR TYPICAL DETAILS, SEE S-1## SERIES, SEE REFERENCES BELOW.
3. NOT USED.
4. DECK PER DECK SCHEDULE ON THIS SHEET. SEE [2 / S-1.8] FOR ADDITIONAL INFORMATION.
5. SEE PLAN FOR T.O.S. NOTE, COORDINATE T.O.S. NOTED WITH ARCHITECTURAL DRAWINGS
6. FOR TYPICAL BEAM TO BEAM CONNECTIONS, SEE DETAIL LEGEND.
7. CANTILEVER BEAM MOMENT CONNECTION SEE DETAIL [1 / S-1.12]
8. COLUMNS : SEE FLOORS BELOW FOR SIZES NOT NOTED HERE IN.
9. BEAM SPLICE. SEE DETAIL [15 / S-1.10] & [11 / S-1.11]
10. INDICATES BOLT CONNECTION AT SLRS SEE DETAIL [12 / S-1.10] BEAMS WITH THIS SYMBOL ARE PART OF THE SLRS.

INDICATES (2) ROWS OF A490SC,
NDICATES (1) ROW OF A490SC,

11. ALL STEEL BEAMS SHALL HAVE WELDED STUDS. SEE DETAIL [8 / S-1.11]
12. AT ALL SLRS BEAMS PROVIDE BRACING @ 8' - 0" O.C. MAX PER DETAIL [4 / S-1.12]
13. DENOTES FLOOR/ROOF PENETRATION. FOR TRIM REINF SEE DETAIL [8 / S-1.8] SEE ARCHT'L / MEP DRAWINGS FOR ACTUAL LOCATION AND ADDITION INFO AND ADDITIONAL PENETRATIONS NOT SHOWN IN THESE DRAWINGS
14. DENOTES MECH'L UNIT (WITH MAX OPERATING WEIGHT) @ AC OR HPU SEE DET. [3 / S-1.13] @ EF OR GV SEE DET. [4 / S-1.13] @ CU SEE DET. [1 / S-1.13]
15. ALL LEDGERS (C12x) ARE PART OF THE SLRS.
16. SOLAR ZONE NOTE: THE SOLAR PANEL SYSTEM HEIGHT SHALL BE LIMITED TO A HEIGHT OF 24" MAX ABOVE THE ROOFING. THE ASSUMED MAX WEIGHT FOR FUTURE SOLAR = 3 POUNDS PER SQ FOOT. THE METAL DECK SHALL NOT PROVIDE VERTICAL SUPPORT FOR THE SOLAR STRUCTURE. FOR ATTACHMENT SEE DET [7 / S-1.13]

DECK SCHEDULE

DECK MARK	TYPE	GAGE	I (IN4/FT)	S (TOP +) (IN3/FT)	S (BOT -) (IN3/FT)	TOTAL DEPTH(IN)	CONC FILL TYPE	REINF.	WELDED STUDS	SIDE-SEAM ATTACHMENT	ATTACHMENT PATTERN
D1	VERCO W2 IAPMO 2018	18	0.564	0.471	0.481	5"	LWC	#3 @ 12" O/C E.W.	3/4 DIA. X 4 1/2" FN HT @ 12" O/C	TOP SEAM WELD @ 24" O/C	36/4
D2	HSB 36 IAPMO 2018	18	0.306	0.314	0.331	1 1/2"	BARE	-	-	TOP SEAM WELD @ 6" O/C	36/4
D3	VERCO HSB-36 IAPMO 2018	18	0.302	0.314	0.401	1.5"	BARE DECK	#3 @ 12" O/C E.W.	3/4 DIA. X 4 1/2" FN HT @ 12" O/C	TOP SEAM WELD @ 24" O/C	36/4
D4	VERCO 2.0D IAPMO 2018	18	0.792	0.587	0.576	5"	LWC	#3 @ 12" O/C E.W.	3/4 DIA. X 4 1/2" FN HT @ 12" O/C	TOP SEAM WELD @ 24" O/C	24.5/8

TYPICAL BM TO BM & BM TO COL. LEGEND

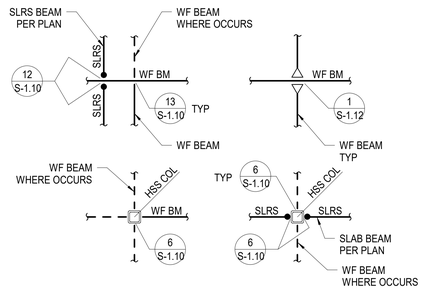

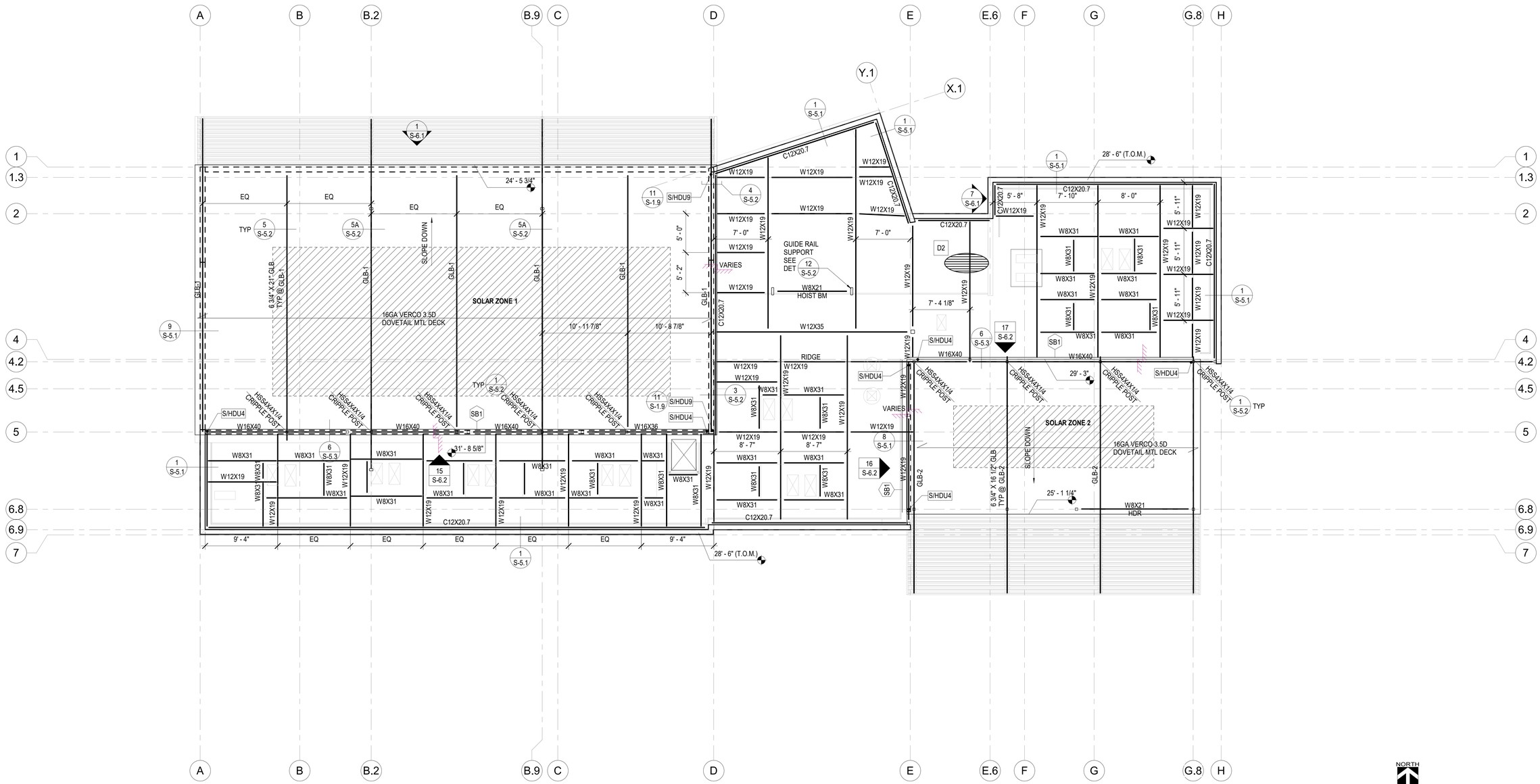

NORTH

1 / S-3.2 ROOF FRAMING PLAN

SCALE: 3/16" = 1'-0"
REF DET:1 / S-6.1

PREPARED BY:
MCA ENGINEERS INC
CIVIL • STRUCTURAL
2151 Michelson Dr. #240
Irvine, CA 92612
Tel. 949.679.0870
Fax. 949.679.9370
Project No.: I699

REVISIONS			
NO.	DESCRIPTION	DATE	APPROVED
1	90%CD SUBMITTAL	12/15/2022	
2	100%CD SUBMITTAL	05/01/2023	
3	FINAL SUBMITTAL	06/30/2023	

B.M.: THE CITY OF GARDENA BENCHMARK NO. SD-15 ELEV. = 43.508'

	INITIAL	DATE
DESIGNED BY	AQ	05/01/23
DRAWN BY	AN	06/29/23
CHECKED BY	YN	06/29/23

APPROVED BY:
APPROVED BY: DIRECTOR OF PUBLIC WORKS

CITY OF GARDENA
DEPARTMENT OF PUBLIC WORKS - ENGINEERING
ROOF FRAMING PLAN
COMMUNITY AQUATICS & SENIOR CENTER
S-3.2

SHT. 103 OF 195 DWG. NO. 5-2606

REL: GARDENA AQUATICS CENTER - 20% CONSTRUCTION DOCUMENTS
PLOT DATE: 6/30/2023 10:29:11 AM
PLOT BY: Yuan Ning
FILE NAME: C:\Users\yuan.ning\Documents\151-Gardena AM

SOLAR ROOF FRAMING NOTES:

1. FOR GENERAL NOTES, SEE S-00# SERIES OF BLDG PLANS UNO BELOW.
2. FOR ROOF FRAMING INFO SEE BLDG PLANS SHEET S-3.2

STRUCTURAL DESIGN CRITERIA:

1. CODES:
   ALL WORK SHALL BE IN CONFORMANCE WITH THE CALIFORNIA BUILDING CODE (CBC) 2022 EDITION, INCLUDING ALL AMENDMENTS. ALL STANDARDS USED SHALL BE THE LATEST VERSION APPROVED BY THE CODE ENFORCEMENT AGENCY ON THE DATE OF THE PERMIT ISSUANCE UNLESS SPECIFICALLY NOTED OTHERWISE.
2. DESIGN LIVE LOAD

	LOAD
ROOF	20 PSF

3. WIND DESIGN INFORMATION

RISK CATEGORY = III	Kz = 0.98	Kd =0.85	Kzt = 1.0
BASIC WIND SPEED Vfm = 101 MPH (3 SEC GUST)			EXPOSURE = C
INTERNAL PRESSURE COEFF. = +/- 0.18			

4. SEISMIC DESIGN INFORMATION

I = 1.25	RISK CATEGORY = III			SITE CLASS = D
S_S = 1.795	S1 = 0.636	SDS = 1.196	SD1 = 1.196	
SEISMIC DESIGN CATEGORY = D				

5. RAIN INTENSITY
   (PER NOAA ATLAS 14 POINT PRECIPITATION FREQUENCY ESTIMATES)

   PRIMARY DRAINAGE: 60 MIN DURATION/100YR RETURN PERIOD: 1.67 IN /HOUR
   SECONDARY DRAINAGE: 15 MIN DURATION/100YR RETURN PERIOD: 3.45 IN /HOUR

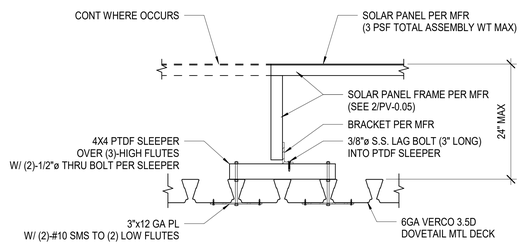

2 / S-3.2A SOLAR FRAME SUPPORT
SCALE:N.T.S.

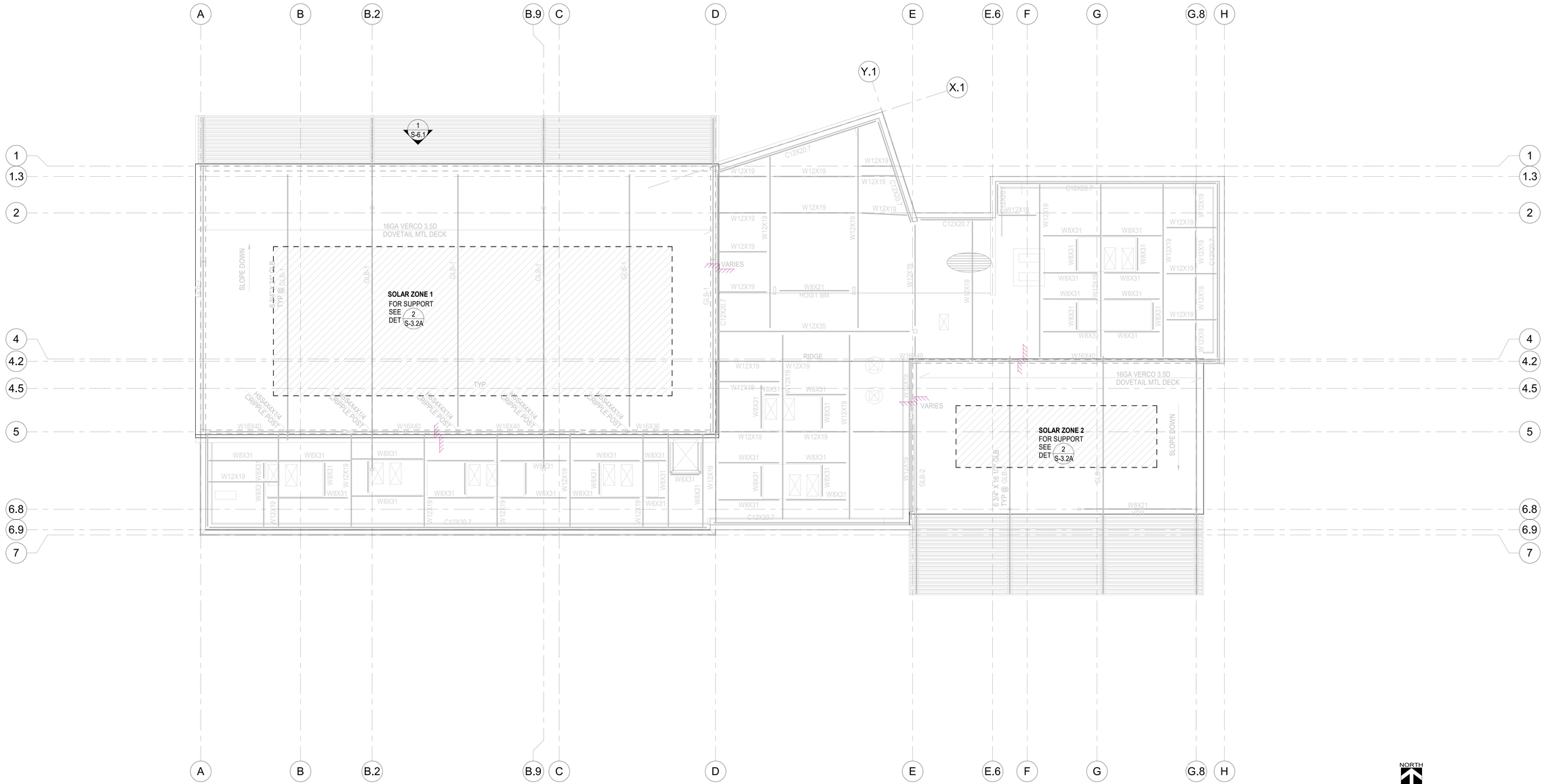

1 / S-3.2A SOLAR ROOF FRAMING PLAN
SCALE: 3/16" = 1'-0"
REF DET.1 / S-6.1

CITY OF GARDENA
FREEWAY CITY
INCORPORATED 1930

PREPARED BY:
SVA ARCHITECTS
6 HUTTON CENTRE DR, SUITE 1150
SANTA ANA, CA 92707
T 949.809.3380 WWW.SVA-ARCHITECTS.COM

THIS DOCUMENT CONTAINS INFORMATION PROPRIETARY TO SVA ARCHITECTS INC. AND IS FURNISHED IN CONFIDENCE FOR THE LIMITED PURPOSE OF EVALUATION, BIDDING OR REVIEW. THIS DOCUMENT OR ITS CONTENTS MAY NOT BE USED FOR ANY OTHER PURPOSE AND MAY NOT BE REPRODUCED OR DISCLOSED OR DISSEMINATED TO OTHERS WITHOUT THE PRIOR WRITTEN CONSENT OF SVA ARCHITECTS INC. ALL RIGHTS RESERVED, © COPYRIGHT 2018.

REVISIONS

NO.	DESCRIPTION	DATE	APPROVED

B.M.: THE CITY OF GARDENA BENCHMARK NO. SD-15
ELEV. = 43.508'

CITY OF GARDENA
DEPARTMENT OF PUBLIC WORKS - ENGINEERING

SOLAR ROOF FRAMING PLAN

COMMUNITY AQUATICS & SENIOR CENTER
S-3.2A

	INITIAL	DATE
DESIGNED BY		
DRAWN BY		
CHECKED BY		

APPROVED BY:

APPROVED BY: DIRECTOR OF PUBLIC WORKS

SHT. 103A OF 195 DWG. NO. 5-2606

BELL GARDENS AQUATICS CENTER - 90% CONSTRUCTION DOCUMENTS

PLOT DATE: 12/20/2023 3:39:23 PM
PLOT NAME: C:\Users\SVA\Desktop\Current Documents\231-Gardena\Revit Files\231-Gardena_S-3.2A.rvt

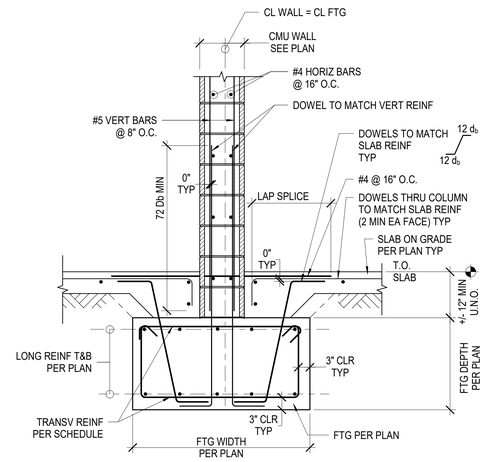

1 S-4.1 INTERIOR CMU WALL FOOTING DETAIL

SCALE:N.T.S.
REF DET:1 / S-2.1

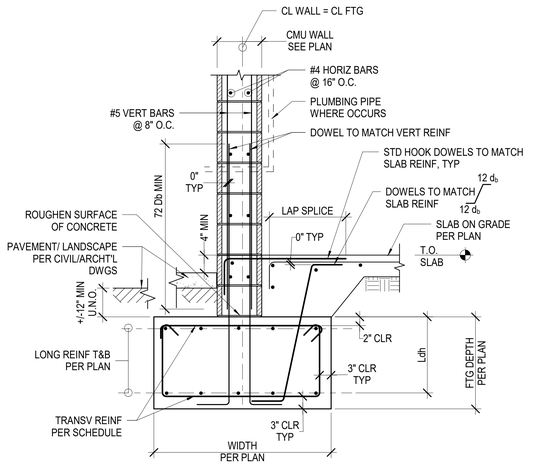

2 S-4.1 WALL FOOTING @ CMU WALL (BLDG EXTERIOR)

SCALE:N.T.S.
REF DET:12 / S-1.2

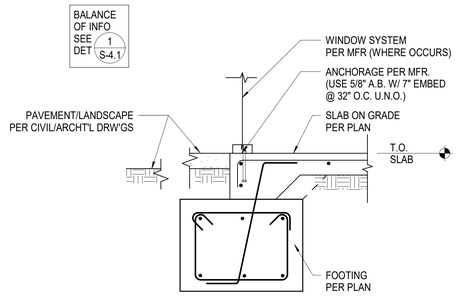

3 S-4.1 SLAB EDGE AT BLDG PERIMETER

SCALE:N.T.S.
REF DET:1 / S-2.1

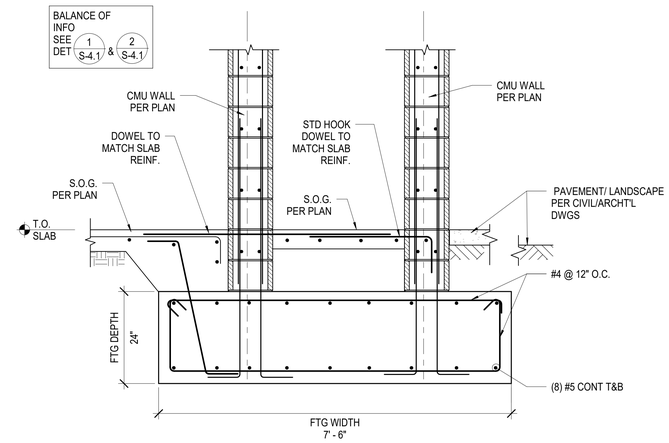

4 S-4.1 TWO CMU WALLS ON ONE FTG

SCALE:N.T.S.
REF DET:1 / S-2.1

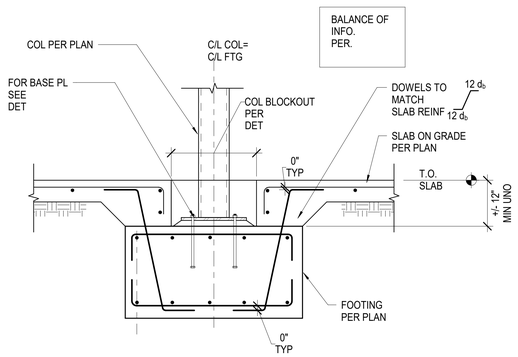

5 S-4.1 HSS COL AT BLDG INTERIOR

SCALE:N.T.S.
REF DET:1 / S-2.1

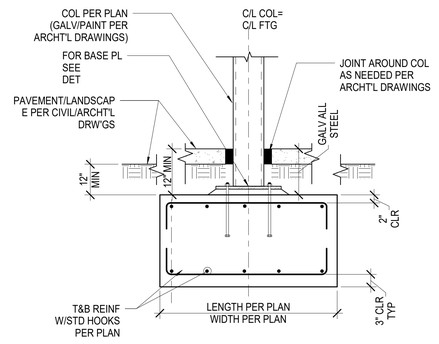

6 S-4.1 HSS COL AT EXTERIOR PAVEMENT

SCALE:N.T.S.

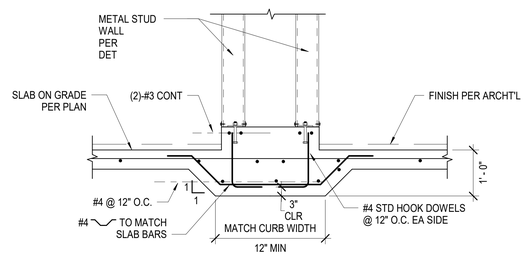

7 S-4.1 DOUBLE WALL AT CURB (MTL STUD)

SCALE:N.T.S.

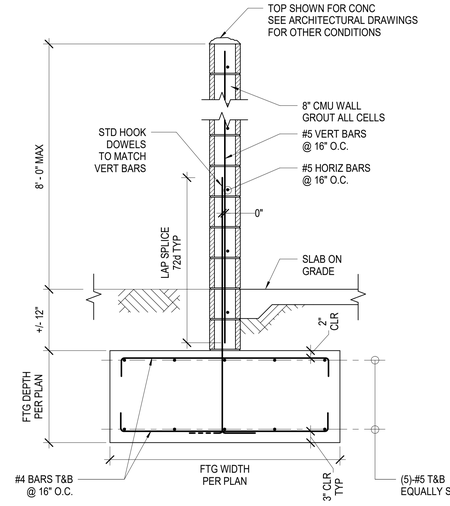

8 S-4.1 TYP FREESTANDING WALLS

SCALE:N.T.S.
REF DET:1 / S-2.1

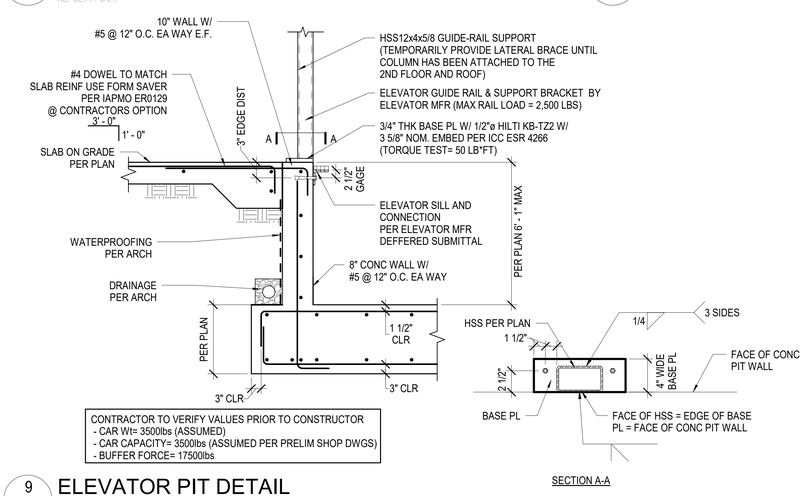

9 S-4.1 ELEVATOR PIT DETAIL

SCALE:N.T.S.
REF DET:1 / S-2.1

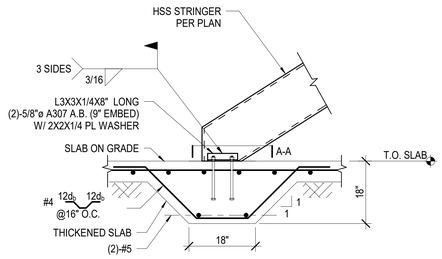

10 S-4.1 STRINGER TO SLAB

SCALE: 3/4" = 1'-0"
REF DET:1 / S-2.1

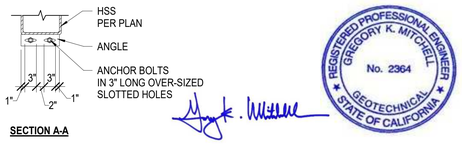

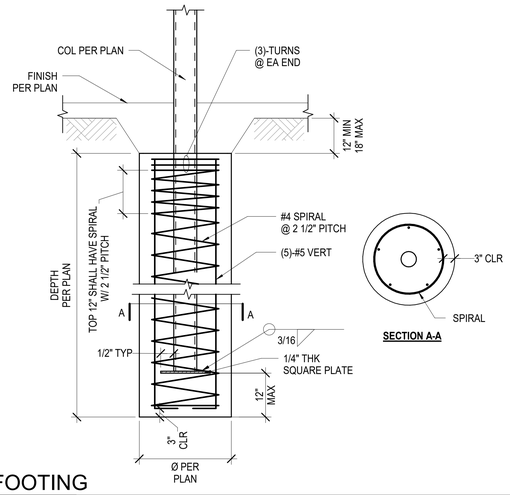

12 S-4.1 POLE FOOTING

SCALE: 3/4" = 1'-0"
REF DET:1 / S-2.1

PREPARED BY:
MCA ENGINEERS INC
CIVIL • STRUCTURAL
2151 Michelson Dr. #240
Irvine, CA 92612
Tel. 949.679.0870
Fax. 949.679.9370
Project No.: I699

REVISIONS			
NO.	DESCRIPTION	DATE	APPROVED
1	90%CD SUBMITTAL	12/15/2022	
2	100%CD SUBMITTAL	06/01/2023	
3	FINAL SUBMITTAL	06/30/2023	

B.M.: THE CITY OF GARDENA BENCHMARK NO. SD-15 ELEV. = 43.508'

CITY OF GARDENA
DEPARTMENT OF PUBLIC WORKS - ENGINEERING

FOUNDATION DETAILS

COMMUNITY AQUATICS & SENIOR CENTER

S-4.1

	INITIAL	DATE
DESIGNED BY	AQ	05/01/23
DRAWN BY	AN	06/29/23
CHECKED BY	YN	06/29/23

APPROVED BY:

APPROVED BY: DIRECTOR OF PUBLIC WORKS

SHT. 104 OF 195 DWG. NO. 5-2606

BELL GARDENS AQUATICS CENTER - 90% CONSTRUCTION DOCUMENTS
PLOT DATE: 12/15/2022 10:59:59 AM
PLOT BY: Yuri Nikolayevich Lin
FILE NAME: C:\Users\ylin\Documents\191-Gardena AM

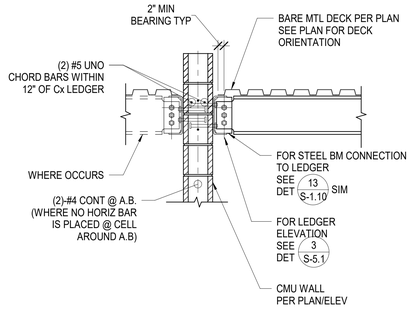

1 S-5.1 ROOF BEAM TO CMU CONNECTION

SCALE:N.T.S.
REF DET:1 / S-2.2

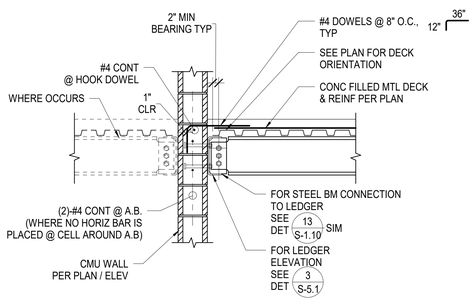

2 S-5.1 FLOOR BEAM TO CMU CONNECTION

SCALE:N.T.S.
REF DET:1 / S-3.1

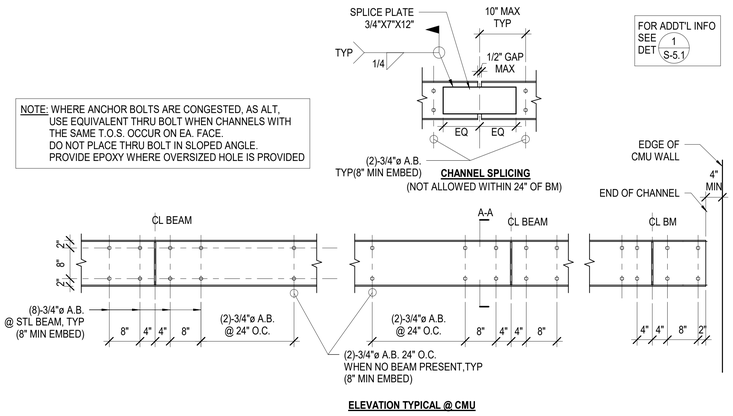

ELEVATION TYPICAL @ CMU

3 S-5.1 C12X LEDGER ELEVATION & DETAIL

SCALE:N.T.S.
REF DET:1 / S-5.1

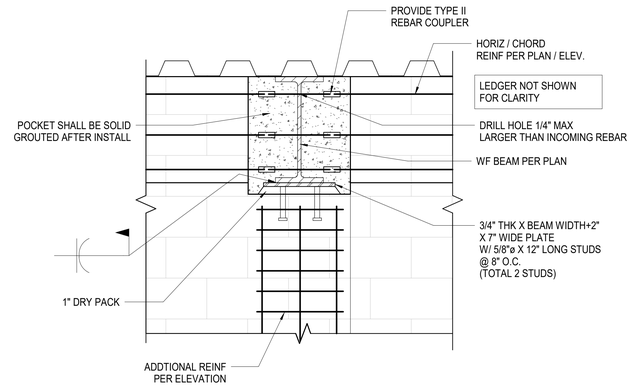

4 S-5.1 BEAM POCKET @ WF BEAM

SCALE:N.T.S.
REF DET:5 / S-5.1

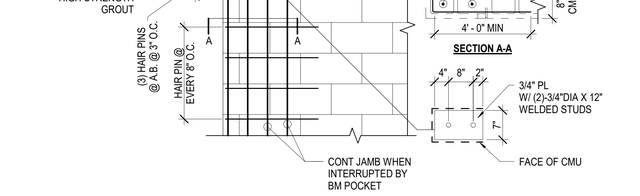

5 S-5.1 DRAG EMBED INTO CMU

SCALE: 3/4" = 1'-0"
REF DET:1 / S-3.1

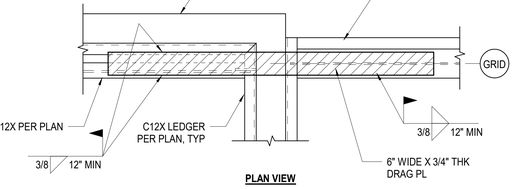

PLAN VIEW

6 S-5.1 DRAG PLATE THRU CMU WALL

SCALE:N.T.S.

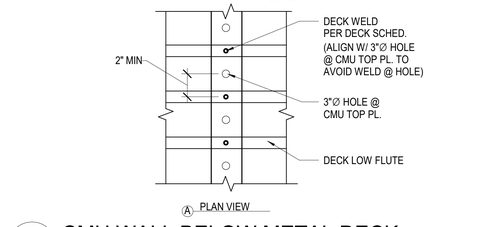

7 S-5.1 CMU WALL BELOW METAL DECK

SCALE: 3/4" = 1'-0"
REF DET:1 / S-3.1

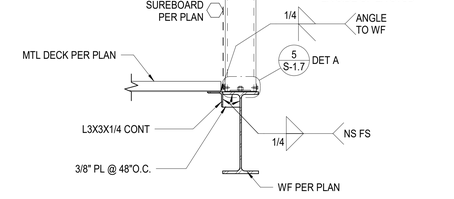

8 S-5.1 SUREBOARD @ ROOF

SCALE:N.T.S.
REF DET:1 / S-3.2

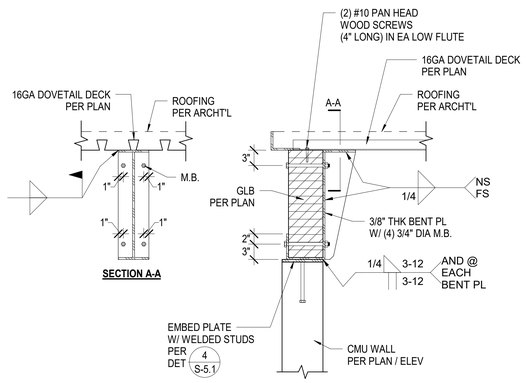

9 S-5.1 GLB @ CMU WALL

SCALE:N.T.S.
REF DET:1 / S-3.2

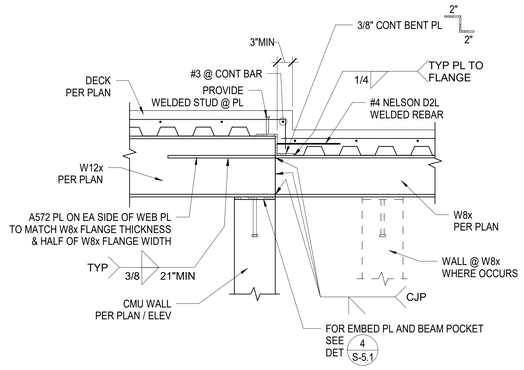

10 S-5.1 REDUCED BEAM DEPTH @ STEP

SCALE:N.T.S.
REF DET:1 / S-3.1

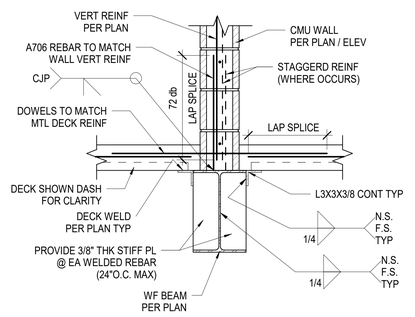

11 S-5.1 CMU WALL @ WF BEAM

SCALE:N.T.S.
REF DET:1 / S-3.1

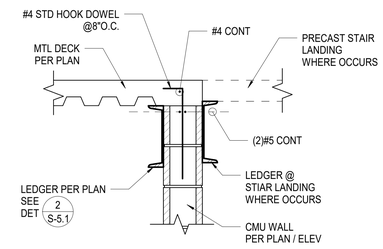

12 S-5.1 WALL TO FLOOR DOWEL @ ENTRY/OPENING

SCALE:N.T.S.
REF DET:1 / S-3.1

B.M.: THE CITY OF GARDENA BENCHMARK NO. SD-15
ELEV. = 43.508'

PREPARED BY:
MCA ENGINEERS INC
CIVIL • STRUCTURAL
2151 Michelson Dr. #240
Irvine, CA 92612
Tel. 949.679.0870
Fax. 949.679.9370
Project No.: I699

REVISIONS			
NO.	DESCRIPTION	DATE	APPROVED
1	90%CD SUBMITTAL	12/15/2022	
2	100%CD SUBMITTAL	05/01/2023	
3	FINAL SUBMITTAL	06/30/2023	

	INITIAL	DATE
DESIGNED BY	AQ	05/01/23
DRAWN BY	AN	06/29/23
CHECKED BY	YN	06/29/23

APPROVED BY:

APPROVED BY: DIRECTOR OF PUBLIC WORKS

SHT. 105 OF 195 DWG. NO. S-2606

CITY OF GARDENA
DEPARTMENT OF PUBLIC WORKS - ENGINEERING
FRAMING DETAILS
COMMUNITY AQUATICS & SENIOR CENTER
S-5.1

BELL GARDENS AQUATICS CENTER - 90% CONSTRUCTION DOCUMENTS
PLOT DATE: 6/30/2023 9:59:55 AM
PLOT BY: Yuri Nakamura
FILE NAME: C:\Users\ynakamura\Desktop\Document 131-Gardena AA

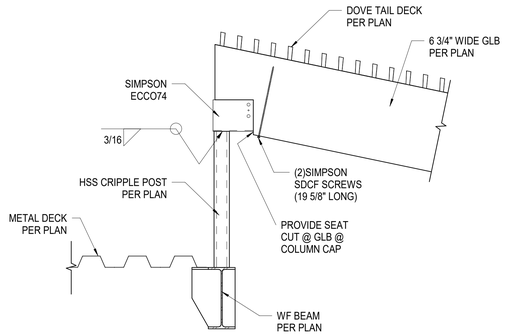

1 S-5.2 CRIPPLE POST DETAIL

SCALE:N.T.S.
REF DET:1 / S-3.2

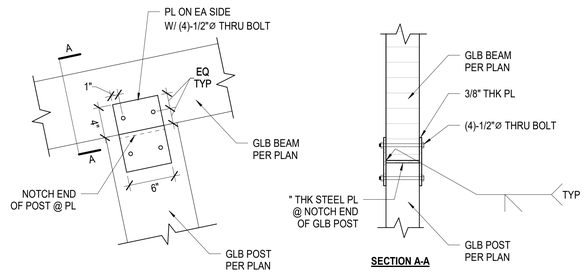

2 S-5.2 DETAIL

SCALE: 1 1/2" = 1'-0"

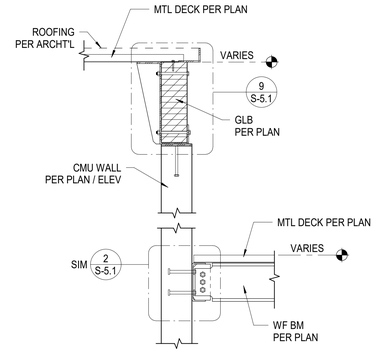

3 S-5.2 CMU WALL @ ROOF

SCALE:N.T.S.
REF DET:1 / S-3.2

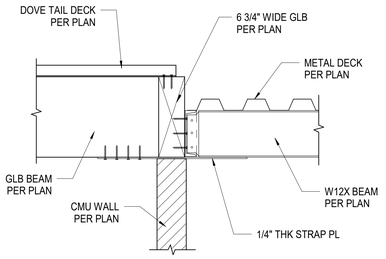

4 S-5.2 DRAG DETAIL

SCALE:N.T.S.
REF DET:1 / S-3.2

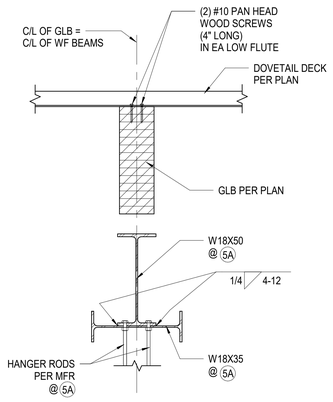

5 S-5.2 OPERABLE PARTITION SUPPORT

SCALE:N.T.S.
REF DET:1 / S-3.2

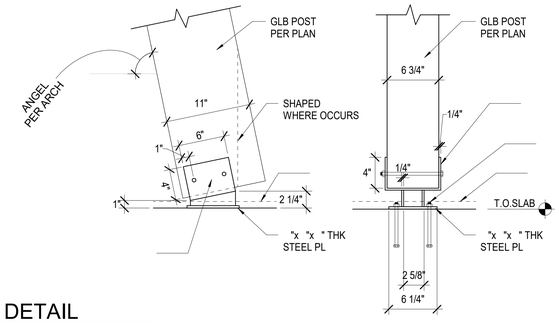

6 S-5.2 DETAIL

SCALE: 1 1/2" = 1'-0"
REF DET:7 / S-5.2

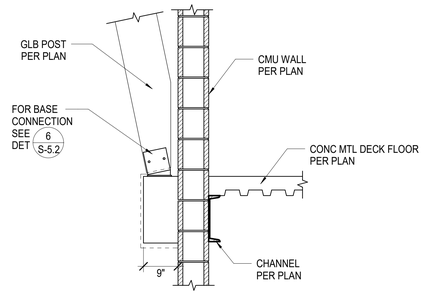

7 S-5.2 DETAIL

SCALE: 3/4" = 1'-0"

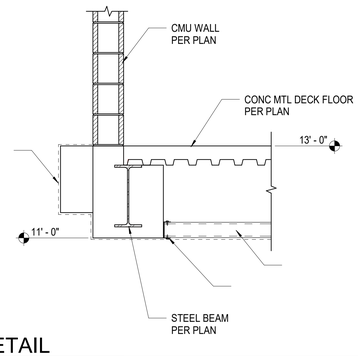

8 S-5.2 DETAIL

SCALE: 3/4" = 1'-0"

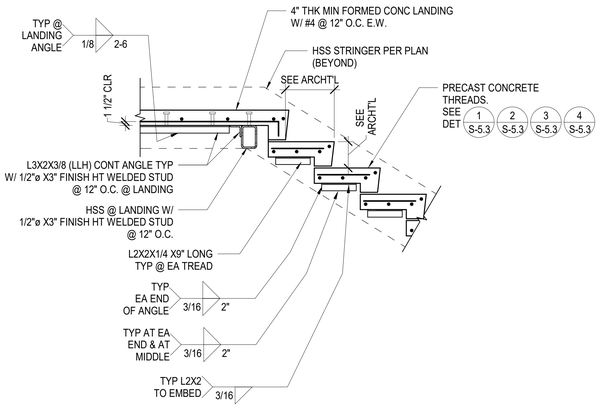

9 S-5.2 TYPICAL STAIR THREAD AND LANDING DETAIL

SCALE:N.T.S.
REF DET:10 / S-5.2

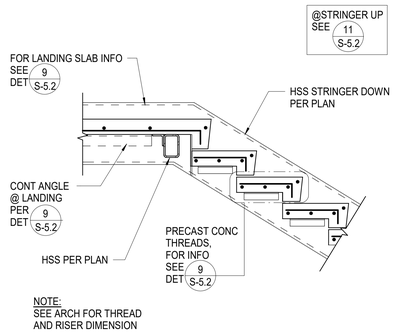

10 S-5.2 STAIR @ INTERMEDIATE LANDING (STRINGER DN)

SCALE:N.T.S.
REF DET:11 / S-5.2

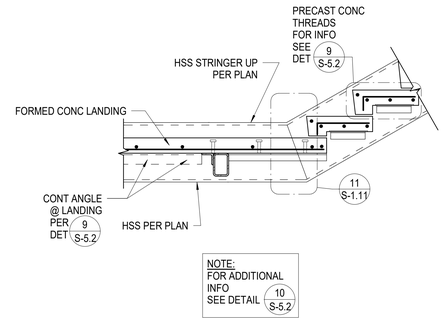

11 S-5.2 STAIR @ INTERMEDIATE LANDING (STRINGER UP)

SCALE:N.T.S.
REF DET:10 / S-5.2

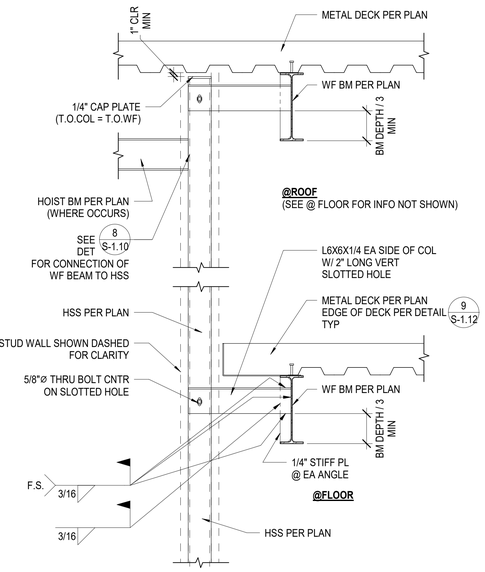

12 S-5.2 COLUMN LATERAL SUPPORT

SCALE:N.T.S.
REF DET:1 / S-3.1

PREPARED BY:

MCA ENGINEERS INC
CIVIL • STRUCTURAL
2151 Michelson Dr. #240
Irvine, CA 92612
Tel. 949.679.0870
Fax. 949.679.9370
Project No.: I699

B.M.: THE CITY OF GARDENA BENCHMARK NO. SD-15
ELEV. = 43.508'

REVISIONS			
NO.	DESCRIPTION	DATE	APPROVED
1	90%CD SUBMITTAL	12/15/2022	
2	100%CD SUBMITTAL	05/01/2023	
3	FINAL SUBMITTAL	06/30/2023	

	INITIAL	DATE
DESIGNED BY	AQ	05/01/23
DRAWN BY	AN	04/29/23
CHECKED BY	YN	04/29/23

CITY OF GARDENA
DEPARTMENT OF PUBLIC WORKS - ENGINEERING

FRAMING DETAILS

COMMUNITY AQUATICS & SENIOR CENTER

S-5.2

APPROVED BY:

APPROVED BY: DIRECTOR OF PUBLIC WORKS

SHT. 106 OF 195 DWG. NO. S-2606

PLOT DATE: 6/30/2023 10:29:53 AM
FILE NAME: G:\2021\I699\Drawings\Construction\S-5.2 Framing Details.dwg
User: AN

REL GARDENA AQUATICS CENTER - 60% CONSTRUCTION DOCUMENTS

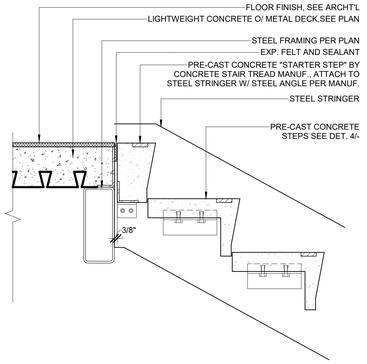

1 S-5.3 INTERIOR STAIR UP @LANDING

SCALE: 1 1/2" = 1'-0"
REF DET:9 / S-5.2

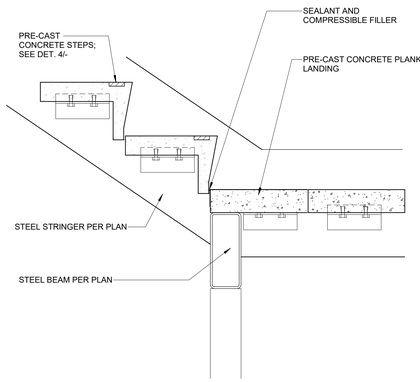

2 S-5.3 STEEL STRINGER STAIR @MID-LANDING UP

SCALE: 1 1/2" = 1'-0"
REF DET:9 / S-5.2

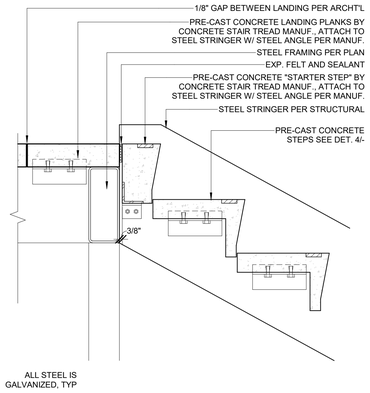

3 S-5.3 EXTERIOR STAIR UP @ MID-LANDING DOWN

SCALE: 1 1/2" = 1'-0"
REF DET:9 / S-5.2

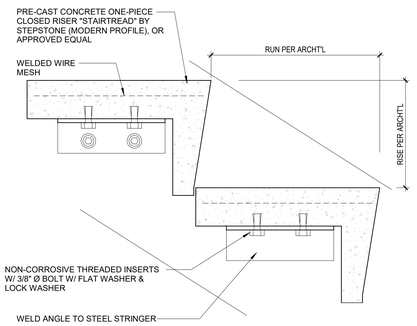

4 S-5.3 PRECAST TREAD/RISER

SCALE: 3" = 1'-0"
REF DET:9 / S-5.2

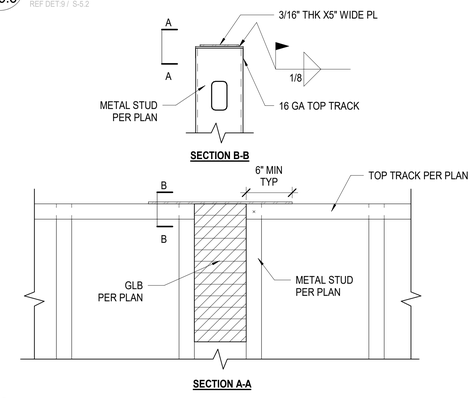

5 S-5.3 DRAG STRAP @ MTL STUD @ WOOD BM

SCALE:N.T.S.

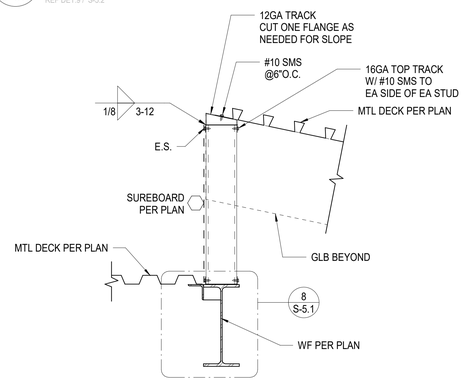

6 S-5.3 SUREBOARD DETAIL @ ROOF

SCALE:N.T.S.
REF DET:1 / S-3.2

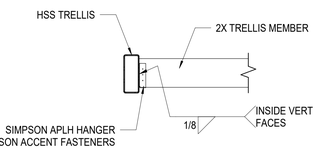

9 S-5.3 TRELLIS JOIST TO HSS BEAM

SCALE: 3/4" = 1'-0"

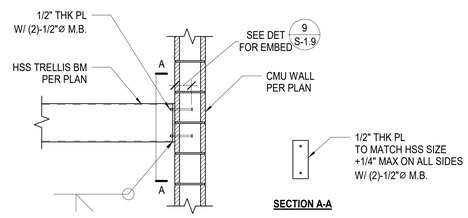

10 S-5.3 TRELLIS BEAM TO CMU WALL

SCALE: 3/4" = 1'-0"
REF DET:1 / S-3.1

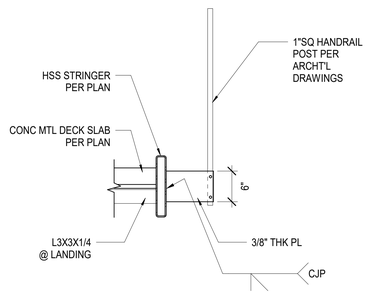

11 S-5.3 STAIR STRINGER @ FLOOR LANDING

SCALE: 1" = 1'-0"

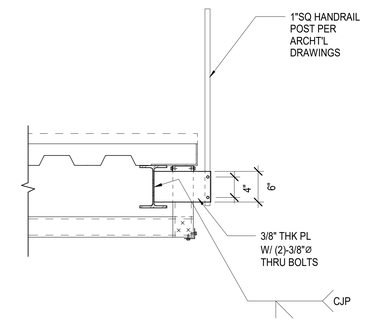

12 S-5.3 HANDRAIL ATTACMENT DETAIL

SCALE: 1" = 1'-0"
REF DET:1 / S-3.1

CITY OF GARDENA
INCORPORATED 1930

PREPARED BY:

MCA ENGINEERS INC
CIVIL ● STRUCTURAL
2151 Michelson Dr. #240
Irvine, CA 92612
Tel. 949.679.0870
Fax. 949.679.9370
Project No.: I699

REVISIONS			
NO.	DESCRIPTION	DATE	APPROVED
1	90%CD SUBMITTAL	12/15/2022	
2	100%CD SUBMITTAL	05/01/2023	
3	FINAL SUBMITTAL	06/30/2023	

B.M.: THE CITY OF GARDENA BENCHMARK NO. SD-15
ELEV. = 43.008'

CITY OF GARDENA
DEPARTMENT OF PUBLIC WORKS - ENGINEERING

STAIR DETAILS

COMMUNITY AQUATICS & SENIOR CENTER
S-5.3

	INITIAL	DATE
DESIGNED BY	AQ	05/01/23
DRAWN BY	AN	06/29/23
CHECKED BY	YN	06/29/23

APPROVED BY:
APPROVED BY: DIRECTOR OF PUBLIC WORKS
SHT. 107 OF 195 DWG. NO. S-2606

BELL GARDENS AQUATICS CENTER - 90% CONSTRUCTION DOCUMENTS
PLOT DATE: 6/30/2023 9:58:58 AM PLOTTED BY: Yuri Nakamura
PLOT NAME: C:\Users\YNakamura\Desktop\Documents\101-Gardena Aquatics Center_Central_R23_YN.rvt

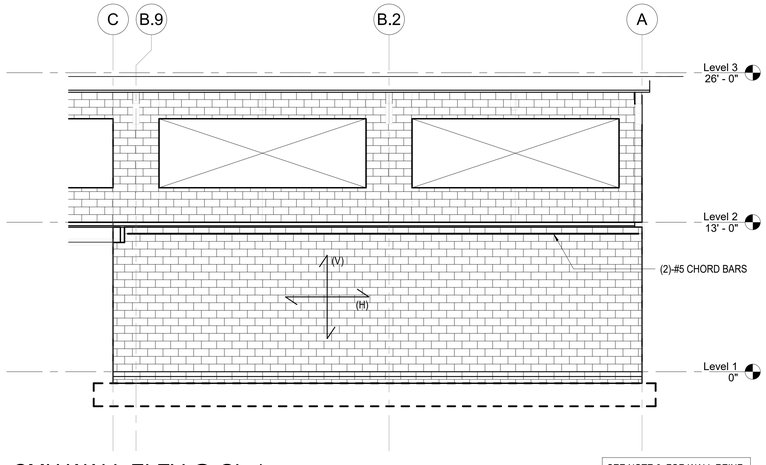

SEE NOTE 6. FOR WALL REINF.

1 S-6.1 CMU WALL ELEV @ GL-1

SCALE: 3/16" = 1'-0"
REF DET:1 / S-2.1

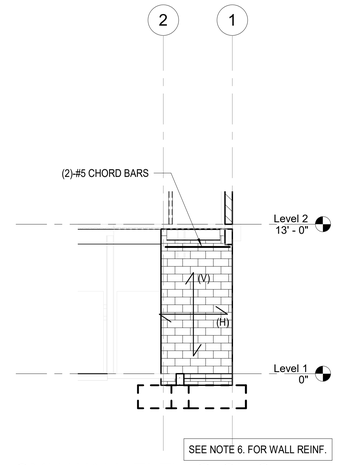

SEE NOTE 6. FOR WALL REINF.

2 S-6.1 CMU WALL ELEV @ GL-C

SCALE: 3/16" = 1'-0"
REF DET:1 / S-2.1

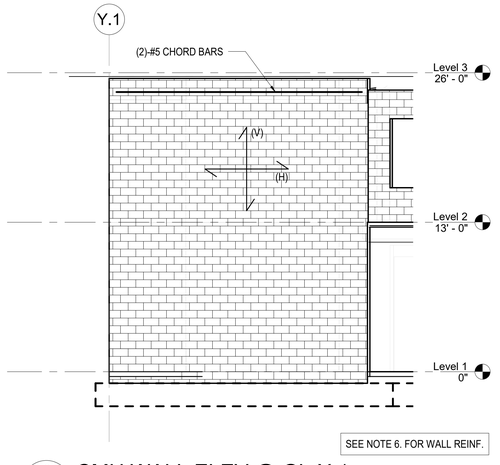

SEE NOTE 6. FOR WALL REINF.

3 S-6.1 CMU WALL ELEV @ GL-X.1

SCALE: 3/16" = 1'-0"
REF DET:1 / S-2.1

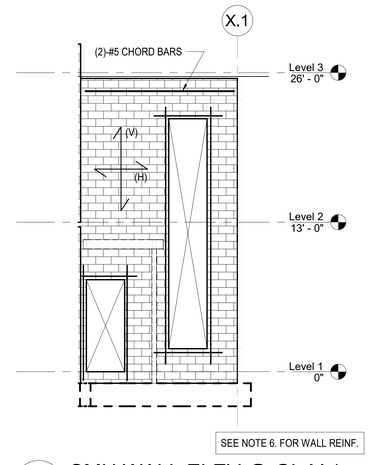

SEE NOTE 6. FOR WALL REINF.

4 S-6.1 CMU WALL ELEV @ GL-Y.1

SCALE: 3/16" = 1'-0"
REF DET:1 / S-2.1

ELEVATION NOTES:

1. FOR TYPICAL REINFORCEMENT DETAIL SEE 7 / S-1.9 AT CMU.
2. FOR TYPICAL JOINT DETAIL SEE 1 / S-1.9 AT CMU.
3. FOR TYPICAL CORNER REINFORCEMENT DETAIL SEE 2 / S-1.9 AT CMU.
4. FOR TYPICAL AND ADDITIONAL REINFORCEMENT, SEE ELEVATIONS ON THIS SHEET.
5. ⊠ DENOTES OPENING IN WALL SEE DETAIL 7 / S-1.9 AT CMU.
6. ALL 8" THK CMU WALL SHALL BE (FULLY GROUT)
   #5 @16"O.C. STAGG. (8"NET) (VERT)
   #4 @16"O.C. STAGG. (8"NET) (HORIZ)

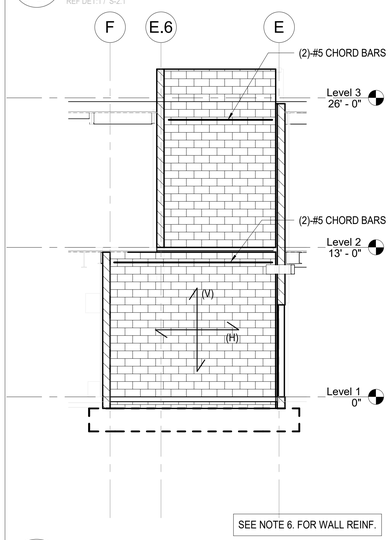

SEE NOTE 6. FOR WALL REINF.

5 S-6.1 CMU WALL ELEV @ GL-2

SCALE: 3/16" = 1'-0"
REF DET:1 / S-2.1

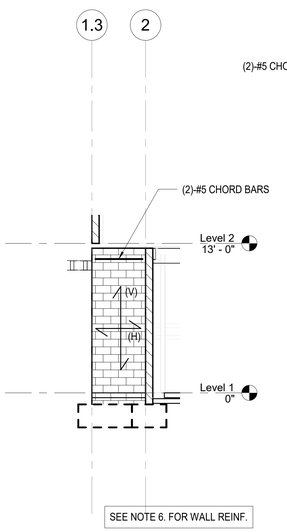

SEE NOTE 6. FOR WALL REINF.

6 S-6.1 CMU WALL ELEV @ GL-F

SCALE: 3/16" = 1'-0"
REF DET:1 / S-2.1

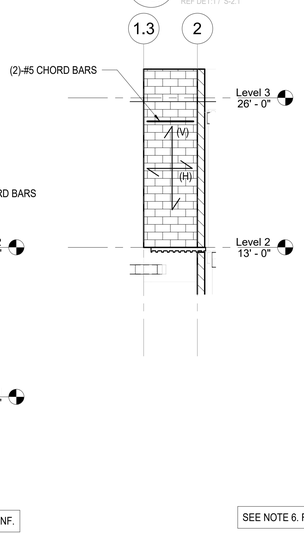

SEE NOTE 6. FOR WALL REINF.

7 S-6.1 CMU WALL ELEV @ GL-E.6

SCALE: 3/16" = 1'-0"
REF DET:1 / S-3.2

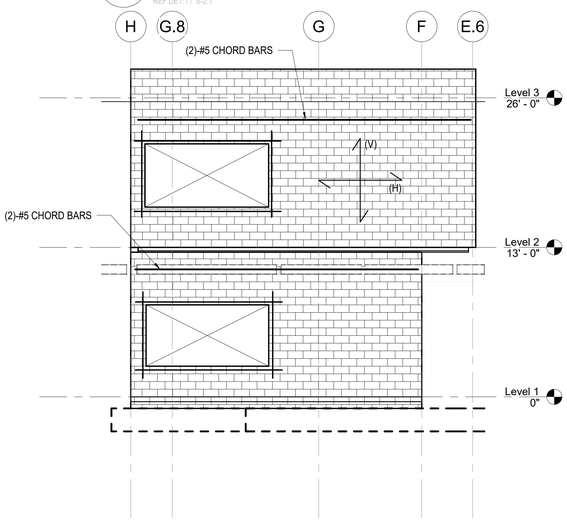

SEE NOTE 6. FOR WALL REINF.

8 S-6.1 CMU WALL ELEV @ GL-1.3

SCALE: 3/16" = 1'-0"
REF DET:1 / S-2.1

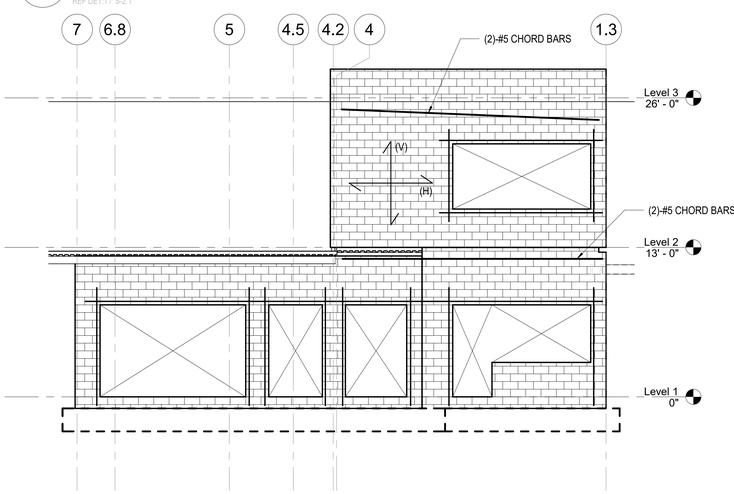

SEE NOTE 6. FOR WALL REINF.

9 S-6.1 CMU WALL ELEV @ GL-H

SCALE: 3/16" = 1'-0"
REF DET:1 / S-2.1

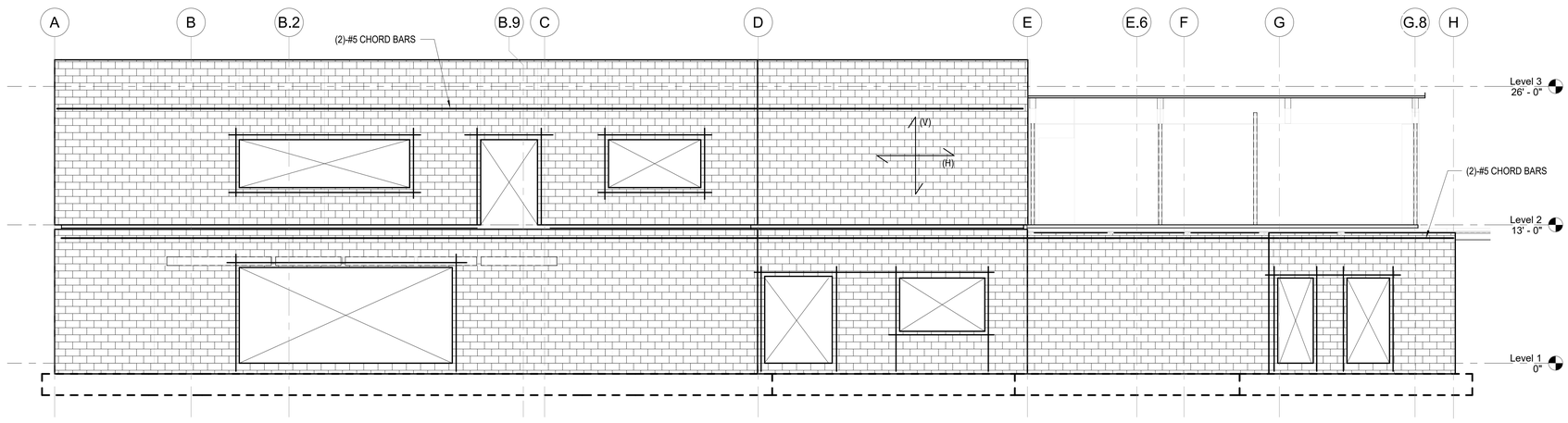

SEE NOTE 6. FOR WALL REINF.

10 S-6.1 CMU WALL ELEV @ GL-7

SCALE: 3/16" = 1'-0"
REF DET:1 / S-2.1

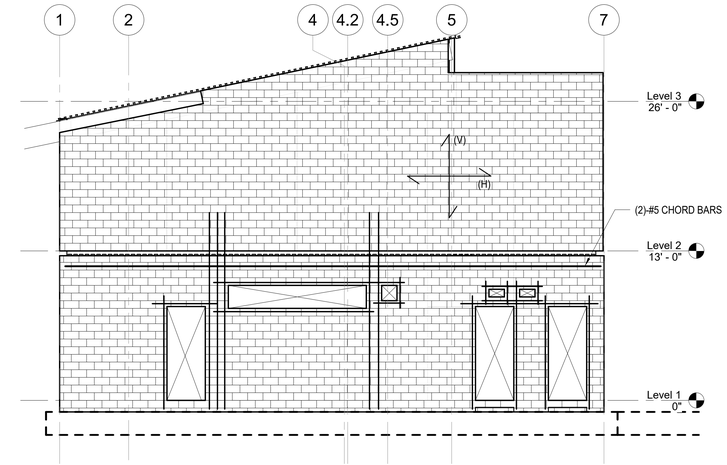

SEE NOTE 6. FOR WALL REINF.

11 S-6.1 CMU WALL ELEV @ GL-A

SCALE: 3/16" = 1'-0"
REF DET:1 / S-2.1

PREPARED BY:
MCA ENGINEERS INC
CIVIL • STRUCTURAL
2151 Michelson Dr. #240
Irvine, CA 92612
Tel. 949.679.0870
Fax. 949.679.9370
Project No.: I699

REVISIONS

NO.	DESCRIPTION	DATE	APPROVED
1	90%CD SUBMITTAL	12/15/2022	
2	100%CD SUBMITTAL	05/01/2023	
3	FINAL SUBMITTAL	06/30/2023	

B.M.: THE CITY OF GARDENA BENCHMARK NO. SD-15
ELEV. = 43.508'

CITY OF GARDENA
DEPARTMENT OF PUBLIC WORKS - ENGINEERING

WALL ELEVATIONS

COMMUNITY AQUATICS & SENIOR CENTER
S-6.1

	INITIAL	DATE
DESIGNED BY	AQ	05/01/23
DRAWN BY	AN	06/29/23
CHECKED BY	YN	06/29/23

APPROVED BY:
APPROVED BY: DIRECTOR OF PUBLIC WORKS
SHT. 108 OF 195 DWG. NO. S-2606

RELEASED FOR CONSTRUCTION - DOCUMENTS
PLOT DATE: 6/30/2023 10:29:00 AM
PLOT BY: Andrew Nguyen
FILE NAME: G:\Projects\I699\Drawings\Arch\Documents\101-Elevations.dwg

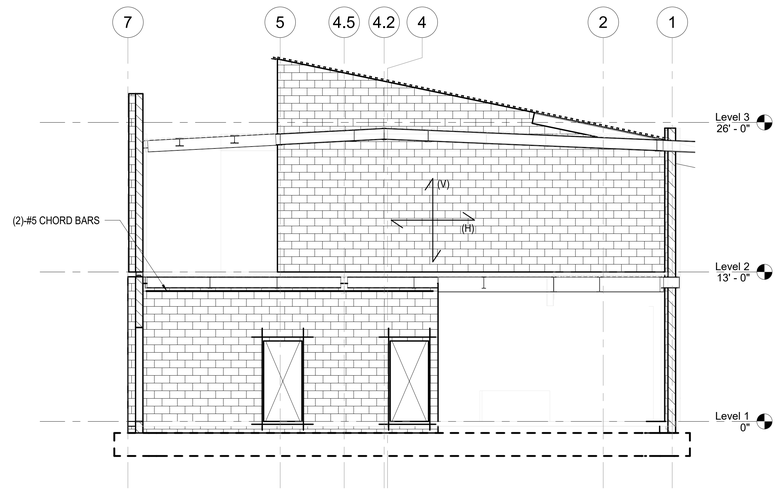

SEE NOTE 6. FOR WALL REINF.

12 S-6.2 CMU WALL ELEV @ GL-D

SCALE: 3/16" = 1'-0"

REF DET:1/ S-2.1

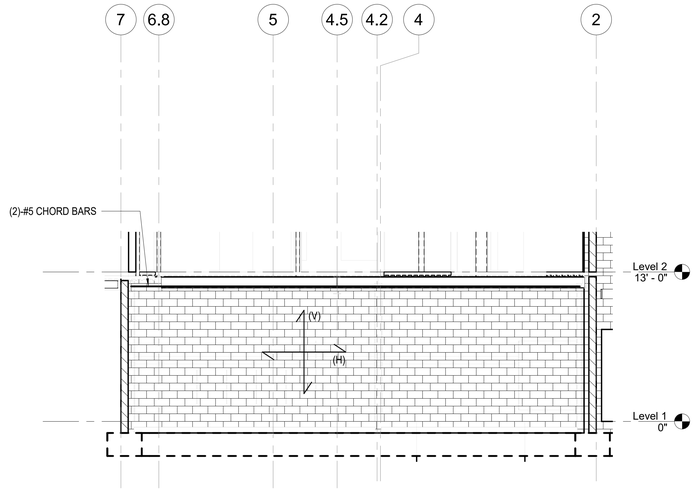

SEE NOTE 6. FOR WALL REINF.

13 S-6.2 CMU WALL ELEV @ GL-E

SCALE: 3/16" = 1'-0"

REF DET:1/ S-2.1

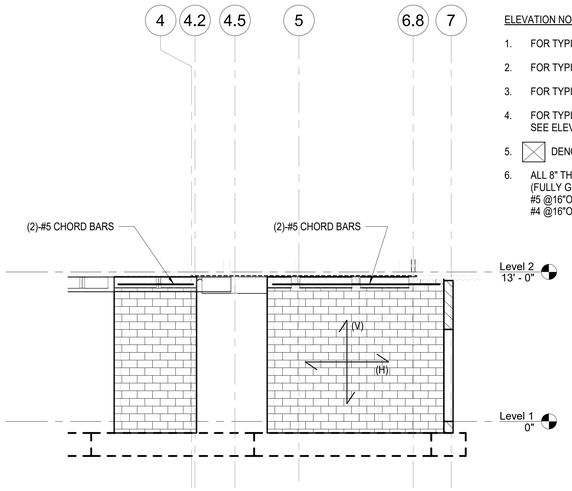

SEE NOTE 6. FOR WALL REINF.

14 S-6.2 CMU WALL ELEV @ GL-G.8

SCALE: 3/16" = 1'-0"

REF DET:1/ S-2.1

ELEVATION NOTES:

1. FOR TYPICAL REINFORCEMENT DETAIL SEE 7 / S-1.9 AT CMU.
2. FOR TYPICAL JOINT DETAIL SEE 1 / S-1.9 AT CMU.
3. FOR TYPICAL CORNER REINFORCEMENT DETAIL SEE 2 / S-1.9 AT CMU.
4. FOR TYPICAL AND ADDITIONAL REINFORCEMENT, SEE ELEVATIONS ON THIS SHEET.
5. DENOTES OPENING IN WALL SEE DETAIL 7 / S-1.9 AT CMU.
6. ALL 8" THK CMU WALL SHALL BE (FULLY GROUT) #5 @16"O.C. STAGG. (8"NET) (VERT) #4 @16"O.C. STAGG. (8"NET) (HORIZ)

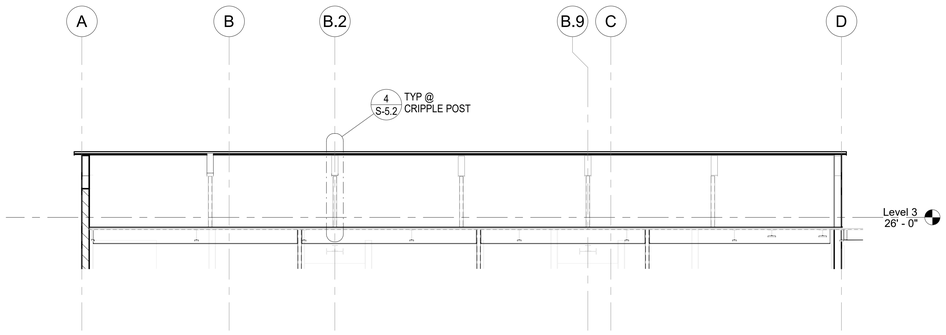

15 S-6.2 EXTERIOR STUD WALL ELEVATION

SCALE: 3/16" = 1'-0"

REF DET:1/ S-3.2

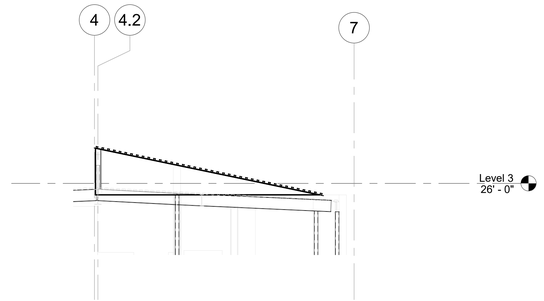

16 S-6.2 EXTERIOR STUD WALL ELEVATION

SCALE: 3/16" = 1'-0"

REF DET:1/ S-3.2

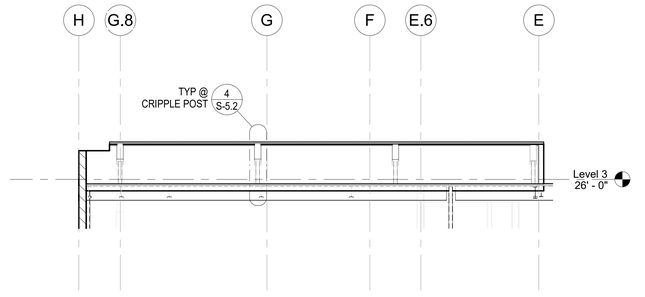

17 S-6.2 EXTERIOR STUD WALL ELEVATION

SCALE: 3/16" = 1'-0"

REF DET:1/ S-3.2

PREPARED BY:
MCA ENGINEERS INC
CIVIL • STRUCTURAL
2151 Michelson Dr. #240
Irvine, CA 92612
Tel. 949.679.0870
Fax. 949.679.9370
Project No.: I699

B.M.: THE CITY OF GARDENA BENCHMARK NO. SD-15
ELEV. = 43.508'

REVISIONS

NO.	DESCRIPTION	DATE	APPROVED
1	90%CD SUBMITTAL	12/15/2022	
2	100%CD SUBMITTAL	06/01/2023	
3	FINAL SUBMITTAL	06/30/2023	

CITY OF GARDENA
DEPARTMENT OF PUBLIC WORKS - ENGINEERING

WALL ELEVATIONS

COMMUNITY AQUATICS & SENIOR CENTER

S-6.2

	INITIAL	DATE
DESIGNED BY	AQ	05/01/23
DRAWN BY	AN	06/29/23
CHECKED BY	YN	06/29/23

APPROVED BY:

APPROVED BY: DIRECTOR OF PUBLIC WORKS

SHT. 109 OF 195 DWG. NO. S-2606

RELEASED FOR CONSTRUCTION - DOCUMENTS
PLOT DATE: 6/30/2023 10:29:54 AM
PLOT BY: C:\Users\aquezada\Documents\101-Gardena AA

LEGEND

SYMBOL		ABBREV.	DESCRIPTION
DOUBLE	SINGLE		
	C	C	COLD SUPPLY AIR DUCT
	E	E	EXHAUST AIR DUCT
	R	R	RETURN AIR DUCT
			ROUND RADIUS ELBOW
48X24(L)	48X24(L)		DUCT WITH INTERNAL LINING L= 1" THICK 2L= 2" THICK
			TRANSITION - RECTANGULAR TO RECTANGULAR OR ROUND TO ROUND
			TRANSITION - RECTANGULAR TO ROUND
			ELBOW WITH TURNING VANE
R	R		RISE IN DIRECTION OF AIRFLOW
D	D		DROP IN DIRECTION OF AIRFLOW
48X24 *	48X24 *		48" X 24" DUCT FIRST DIMENSION FACES VIEWER (* MEANS STAINLESS STEEL)
			FLEXIBLE DUCT
			CEILING DIFFUSER 4-WAY THROW
			CEILING DIFFUSER 3-WAY THROW
			CEILING DIFFUSER 2-WAY THROW
			CEILING DIFFUSER CORNER THROW
			THERMAFUSER SUPPLY DIFFUSER (AS NOTED ON DWG.)
			SUPPLY OR OUTSIDE AIR DUCT - SECTION
			RETURN OR RELIEF AIR DUCT - SECTION
			EXHAUST AIR DUCT - SECTION
			ROUND DUCT OR RISER - SECTION
SFD	SFD		COMBINATION SMOKE & FIRE DAMPER
FD			FIRE DAMPER
	M OR MD	M OR MD	MOTORIZED DAMPER
		VD	MANUAL VOLUME DAMPER (QUADRANT BALANCING DAMPER)
BDD		BDD	BACKDRAFT DAMPER
			FLEXIBLE DUCT CONNECTOR
			CAPPED DUCTWORK
			CONICAL TAP W/MANUAL VOLUME DAMPER
		360	CEILING DIFFUSER, ADAPTER FOR ROUND DUCT. 360 CFM
EXHAUST	RETURN		CEILING GRILLE OR REGISTER
		6X6 150	6"X6"WALL REGISTER, 150 CFM
		(4)3/4"X5'-0" LSD 300	NO. & SIZE OF SLOTS, LENGTH, LINEAR SLOT DIFFUSER, CFM
		(4)3/4"X5'-0" LBD 300	NO. & SIZE OF SLOTS, LENGTH, LINEAR AIR BAR DIFFUSER, CFM
T S			TIMER SWITCH
P			PRESSURE TRANSMITTER
T			TEMPERATURE TRANSMITTER
DP			DIFFERENTAIL PRESSURE TRANSMITTER
T			ROOM THERMOSTAT
XO2			CARBON DIOXIDE SENSOR
DD			DUCT MOUNTED SMOKE DETECTOR (PROVIDE UNDER ELECTRICAL SECTION AND INSTALL UNDER MECHANICAL SECTION)
WL			WALL LOUVER (UNDER ARCH SECTION)
U/C			UNDERCUT DOOR (UNDER ARCH SECTION)
D/L			DOOR LOUVER (UNDER ARCH SECTION)
L/D			LOUVERED DOOR FULL HEIGHT (UNDER ARCH SECTION)
		AP/AD	ACCESS PANEL/ ACCESS DOOR
CFF			CAPPED FOR FUTURE
D		D	INDIRECT DRAIN

LEGEND

SYMBOL	ABBREV.	DESCRIPTION
HWS	HWS	HOT WATER SUPPLY
HWR	HWR	HOT WATER RETURN
IW	IW	INDUSTRIAL WATER
V	V	VENT
MU	MU	MAKE-UP WATER
		CAPPED PIPE
		PIPE ELBOW UP
		PIPE ELBOW DOWN
		PIPE TEE UP
		PIPE TEE DOWN
		STRAINER
		UNION
		FLANGE
		ECCENTRIC REDUCER
		CONCENTRIC REDUCER
EJ		EXPANSION JOINT
		PRESSURE GAGE WITH COCK
		TEMPERATURE GAGE W/ THERMOWELL
PTTP		PRESSURE & TEMPERATURE TEST PLUG
		FLEXIBLE PIPE CONNECTOR
		ANCHOR
		PIPE GUIDE
		FLOW MEASURING STATION
FS	FS	FLOW SWITCH
PS	PS	PRESSURE SWITCH
		PLUG VALVE
		BUTTERFLY VALVE
		BALL VALVE
	GV	GATE VALVE
	GLV	GLOBE VALVE
	CV	CHECK VALVE
		GATE VALVE WITH HOSE CONNECTOR
	RV	SAFETY OR PRESSURE RELIEF VALVE
	PRV	PRESSURE REDUCING VALVE
		CIRCUIT SETTER
		2-WAY CONTROL VALVE
		3-WAY CONTROL VALVE
	AAV	AUTOMATIC AIR VENT TO BE PIPED TO NEAREST APPROVED RECEPTOR
	MAV	MANUAL AIR VENT TO BE PIPED TO NEAREST APPROVED RECEPTOR
DP		DIFFERENTIAL PRESSURE
FS	FS	FLOOR SINK (SEE PLUMBING)
	POC	POINT OF CONNECTION
1 / M1		DETAIL DESIGNATION / SHEET NUMBER — DETAIL REFERENCE
1		SHEET NOTE
A / M-2		SECTION DESIGNATION / SHEET NO. WHERE SECTION DRAWN
1		REVISION TAG
		RETURN / EXHAUST AIR FLOW DIRECTION
E / 1	E-1	NEW EQUIPMENT DESIGNATION
VD		RETURN AIR DUCT W/ BELLMOUTH OPENING W/ WIREMESH SCREEN AT AIR INLET

GENERAL NOTES

1. UNLESS OTHERWISE NOTED, THE WORK DESCRIBED ON THE PLANS AND SPECIFICATIONS SHALL INCLUDE THE FURNISHING AND INSTALLATION OF ALL LABOR AND MATERIALS NECESSARY FOR COMPLETE AND OPERATIONAL HVAC SYSTEMS.
2. ALL WORK SHALL BE IN ACCORDANCE WITH ALL CODES, RULES, AND REGULATIONS OF GOVERNING AGENCIES AND SHALL COMPLY WITH THE REQUIREMENTS OF THE SERVING UTILITY COMPANIES.
3. ALL DUCTWORK, INSULATION, EQUIPMENT AND INSTALLATION SHALL CONFORM TO THE LATEST EDITION OF CALIFORNIA ADMINISTRATIVE CODE TITLE 24 AND C.M.C. DUCT MATERIALS AND CONSTRUCTION SHALL BE PER CHAPTER 6 OF C.M.C. SEAL DUCTS FOR 1% LEAKAGE MAXIMUM.
4. ALL EQUIPMENT, DUCTWORK AND PIPING INSTALLATION SHALL BE SEISMICALLY BRACED IN ACCORDANCE WITH THE LATEST EDITION OF CALIFORNIA BUILDING AND MECHANICAL CODES. HANGING PIPES AND DUCTS ISAT, ROOF SUPPORT PHP DESIGN, AND/OR MASON VIBREX DESIGN.
5. CALIFORNIA MECHANICAL CODE SECTION 608, CONTRACTOR SHALL PROVIDE SHUTOFF FOR SMOKE CONTROL FOR ALL AIR-MOVING SYSTEMS SUPPLYING AIR IN EXCESS OF 2,000 CUBIC FEET PER MINUTE TO ENCLOSED SPACES WITHIN BUILDINGS. AUTOMATIC SHUTOFF SHALL BE ACCOMPLISHED BY INTERRUPTING THE POWER SOURCE OF THE AIR-MOVING EQUIPMENT UPON DETECTION OF SMOKE IN THE MAIN SUPPLY AIR DUCT SERVED BY SUCH EQUIPMENT. SMOKE DETECTORS WHICH WILL DETECT PRODUCTS OF COMBUSTION OTHER THAN HEAT AND WHICH COMPLY WITH THE CALIFORNIA BUILDING CODE, SHALL BE LABELED BY AN APPROVED AGENCY FOR AIR-DUCT INSTALLATION AND SHALL BE INSTALLED IN ACCORDANCE WITH THE MANUFACTURERS'S INSTALLATION INSTRUCTIONS. SUCH DEVICES SHALL BE COMPATIBLE WITH THE OPERATING VELOCITIES, PRESSURES, TEMPERATURES AND HUMIDITIES OF THE SYSTEM. WHERE AN ELECTRICAL CENTRAL FIRE ALARM DETECTION OR ALARM SYSTEM IS PROVIDED FOR THE BUILDING, THE SMOKE DETECTORS REQUIRED BY THIS SECTION SHALL BE FURNISHED AND SUPERVISED BY SUCH SYSTEM AND SHALL ACTIVATE THE SHUTDOWN. REFER TO OTHER DOCUMENTS FOR SMOKE CONTROL AND SMOKE EVACUATION SPECIFIC REQUIREMENTS AND CONTROLS.
6. INFORMATION GIVEN ON THE DRAWING IS AS EXACT AS POSSIBLE BUT DIAGRAMMATIC. ABSOLUTE ACCURACY IS NOT GUARANTEED, AND THE CONTRACTOR SHALL OBTAIN AND VERIFY EXACT LOCATIONS, MEASUREMENTS, LEVEL, SPACE REQUIREMENTS, POTENTIAL CONFLICTS WITH OTHER TRADES AT THE SITE AND SHALL SATISFACTORILY ADAPT HIS WORK TO ACTUAL CONDITIONS AT THE BUILDING.
7. COORDINATE AND ADJUST ALL WORK BETWEEN TRADES IN ORDER TO ACCOMPLISH A COORDINATED, INTEGRATED AND EFFICIENT INSTALLATION. PROVIDE FOR PHASING AND TEMPORARY SYSTEMS REQUIRED TO COMPLETE THE WORK ON SCHEDULE IN CONFORMANCE WITH THE PROJECT DOCUMENTS.
8. COORDINATE EXACT LOCATION OF ALL CEILING DIFFUSERS, REGISTERS AND GRILLES WITH LIGHTING LAYOUT, CEILING TILE PATTERN WITH ARCHITECTURAL REFLECTED CEILING PLANS. IN CASE OF CONFLICT, ARCHITECTURAL REFLECTED CEILING PLANS WILL TAKE PRECEDENCE. WHERE CEILING IS EXTREMELY TIGHT, CAREFULLY COORDINATE DUCT SIZES AND ROUTING WITH ARCHITECTURAL, STRUCTURAL, ELECTRICAL, PLUMBING AND FIRE PROTECTION SYSTEMS. WHERE INTERFERENCES EXIST TRANSITION TO SUITABLE RECTANGULAR DUCTWORK TO MAINTAIN REQUIRED CEILING HEIGHT.
9. INSTALL THE HVAC SYSTEMS IN CONFORMANCE WITH SOUND AND SECURITY REQUIREMENTS SPECIFIED BY OTHER DISCIPLINES. DUCT LINER IS NOT USED UNLESS SPECIFIED BY ACOUSTICAL. OTHERWISE SEAL AROUND ALL PENETRATIONS OF WALLS AND FLOORS AND PER FIRE STOPPING REQUIREMENTS. PROVIDE SOUND BOOTS OF 3-LB DENSITY FIBER BOARD AT PLENUM WALL PENETRATION FOR RETURN AIR ABOVE CEILING.
10. FIELD COORDINATE THE EXACT LOCATION OF ALL TEMPERATURE SENSORS, THERMOSTATS WITH ANY EQUIPMENT, SHELVING, RACKS, CABINETS OR OTHER FACILITY SUPPLIED FURNITURE AND EQUIPMENT, BASED ON THE ARCHITECTURAL DRAWINGS.
11. UNLESS SPECIFICALLY SHOWN ON THESE PLANS, NO STRUCTURAL MEMBER SHALL BE CUT, DRILLED OR NOTCHED WITHOUT WRITTEN AUTHORIZATION FROM THE STRUCTURAL ENGINEER AND ARCHITECT.
12. PROVIDE MANUAL VOLUME DAMPER UPSTREAM OF EACH AIR INLET/OUTLET TO FACILITATE PROPER BALANCE, WHETHER SHOWN OR NOT. VOLUME DAMPER AT DIFFUSERS AND REGISTER OBD'S IF INSTALLED SHALL NOT BE USED FOR AIR BALANCING.
13. SEAL ALL OPENINGS AROUND PIPING AND DUCTWORK PENETRATING FIRE RESISTIVE RATED WALLS AND FLOORS TO MAINTAIN RATING INTEGRITY.
14. CONTRACTOR SHALL COORDINATE DEVICES REQUIRING ACCESS. PROVIDE CEILING, WALL OR FLOOR ACCESS PANELS FOR TERMINAL BOXES, VALVES, COMBINATION SMOKE/FIRE DAMPERS AND VOLUME DAMPERS, ACTUATORS, BACK-DRAFT DAMPERS AS REQUIRED. COORDINATE WITH ARCHITECT FOR EXACT LOCATION AND FINAL COUNT OF ACCESS PANELS. MINIMUM SIZE OF ACCESS PANELS SHALL BE 18" X 18". THE MINIMUM CLEARANCE WORKING SPACE AROUND AND CLEAR FOR MAINTENANCE SHALL BE 4 FT. PERMANENT PROVIDE PLATFORMS AND HAND RAILS FOR SERVICE, AND SEPARATE LOCK OUT TAG OUT DISCONNECTS. COMPLY WITH ALL OSHA AND UNION MAINTENANCE SERVICE REQUIREMENTS. COMPLY WITH ALL COLLEGE SECURITY AND ENVIRONMENTAL REQUIREMENTS FOR PERSONAL SAFETY, AND DISPOSAL OF MATERIALS.
15. INSTALL EQUIPMENT IN ACCESSIBLE LOCATIONS AND PROVIDE ADEQUATE SERVICE CLEARANCE 4 FT FOR NORMAL MAINTENANCE WITHOUT REMOVING ARCHITECTURAL, ELECTRICAL OR STRUCTURAL ELEMENTS.
16. FLEXIBLE DUCT LENGTH SHALL NOT EXCEED 7'-0" AT CONNECTION TO ENVIRONMENTAL AIR OUTLETS. MINIMUM RADIUS SHALL BE 1-1/2 DIAMETER OF DUCT. FLEXIBLE DUCT SHALL NOT BE USED IN SYSTEM IF UTILIZED AS PART OF BUILDING SMOKE CONTROL.
17. PROVIDE ISOLATION VALVES AND UNIONS ON PIPING ADJACENT TO ALL CONTROL VALVES AND OTHER APPURTENANCES OR EQUIPMENT. LOCATE VALVES SO THAT EQUIPMENT CAN BE REMOVED WITHOUT DISMANTLING ANY BRANCH LINES.
18. IN CONCEALED IN-ACCESSIBLE CEILING PROVIDE REMOTE MANUAL VOLUME DAMPER REGULATOR OPERATOR AT ACCESSIBLE LOCATION.
19. ALL CURBS, ROOF JACKS AND EQUIPMENT SUPPORT PADS SHALL BE COMPATIBLE WITH ROOFING SYSTEM.
20. REFER TO PLUMBING DRAWINGS OR ALL CONDENSATE DRAIN PIPING. REFER TO MECHANICAL FOR CONDENSATE TRAP DEPTH REQUIREMENTS.
21. A MAINTENANCE LABEL SHALL BE AFFIXED TO MECHANICAL EQUIPMENT. A MAINTENANCE MANUAL SHALL BE PROVIDED FOR THE OWNER'S USE. LABEL EACH ROOF MOUNTED EQUIPMENT TO IDENTIFY THE AREA IT SERVES. SEE SPECIFICATIONS.
22. ALL DUCTWORK AND EQUIPMENT WHICH ARE EXPOSED SHALL HAVE FINISHED APPEARANCE. THEYH SHALL BE APPLIED WITH PRIMER AND ENAMEL PAINT WHERE EXPOSED TO VIEW. COLOR SHALL BE SELECTED BY THE ARCHITECT. ALL DUCTWORK EXPOSED UNDER THE CEILING SHALL BE PAINTED WITH PRIMER AND ENAMEL PAINT TO MATCH THE SURROUNDINGS. SEE ARCHITECTURAL DRAWINGS.
23. PROVIDE SHEET METAL WEATHER HOOD COVER FOR ALL DAMPER ACTUATORS, SMOKE DETECTOR, MOTORS LOCATED OUTDOORS.
24. WHERE ATTIC OR ABOVE CEILING IS TO BE USED AS RETURN PLENUM, IT SHALL CONTAIN NO COMBUSTIBLE MATERIALS, PLASTIC PIPE OR RUBBER INSULATION. ALL CEILING MATERIALS SHALL BE NON-COMBUSTIBLE OR APPROVED FOR PLENUM INSTALLATION.
25. PROVIDE WALL OPENING ABOVE CEILING LEVEL FOR RETURN AIR IN EACH ROOM AS REQUIRED.
26. FIRE DAMPERS INSTALLED IN DUCTWORK SYSTEM WITHOUT ELECTRIC ACTUATOR SHALL BE U.L. LISTED DYNAMIC TYPE (SPRING LOADED).
27. PROVIDE SECURITY BARS ON ALL EXHAUST FAN OPENINGS AND GRAVITY VENT OPENINGS THROUGH HE ROOF GREATER THAN 16"x16".
28. AIR HANDLING DUCT SYSTEM, EXCEPT GREASE EXHAUST DUCT SYSTEM, SHALL BE CONSTRUCTED, INSTALLED AND INSULATED AS PROVIDED IN CHAPTER 6 OF CMC OF METAL GALVANIZED COPPER BEARING SHEET STEEL.
29. ALL WORK SHALL BE IN ACCORDANCE WITH SMACNA IAQ GUIDELINES FOR OCCUPIED BUILDINGS UNDER CONSTRUCTION SECOND EDITION.
30. GENERAL CONTRACTOR SHALL COMPLY/ SUBMIT CONSTRUCTION WASTE MANAGEMENT PER SEC.5-408.1
31. HVAC MOTORS FOR FANS THAT ARE LESS THAN 1 HP AND 1/12 HP OR GREATER SHALL BE ELECTRONICALLY-COMMUNTATED MOTORS OR SHALL HAVE A MINIMUM MOTOR EFFICIENCY OF 70 PERCENT WHEN RATED IN ACCORDANCE WITH NEMA STANDARD MG 1-2006 AT FULL RATING CONDITIONS. MOTORS IN SPACE CONDITIONING EQUIPMENT AND TERMINAL UNITS THAT OPERATE ONLY WHEN PROVIDING HEATING TO THE SPACE SERVED ARE EXCEPTED.
32. ALL MECHANICAL EQUIPMENT, PLUMBING LINES, HEATING AND COOLING UNITS AND STORAGE TANKS AND DUCTWORK, ROOF OR GROUND MOUNTED, SHALL BE INCORPORATED INTO THE BUILDING ENVELOPE. WHEN THAT IS NOT FEASIBLE, ALL SUCH ITEMS SHALL BE SCREENED ON ALL SIDES WITH SOLID MATERIAL ARCHITECTURALLY COMPATIBLE WITH THE MAIN STRUCTURE. (ORD. 1738 § 39, 2012: ORD. 1683 § 65, 2006; URG. ORD. 1682; PRIOR CODE § 10-3.2116). ALL EXPOSED CONDUIT SHALL BE PAINTED TO MATCH SUBSTRATE.
33. ALL DIMENSIONS SHOWN ON THE DRAWINGS FOR DUCTWORK ARE INSIDE CLEAR DIMENSIONS.

ABBREVIATIONS

AFF	ABOVE FINISHED FLOOR	EF	EXHAUST FAN	OPNG	OPENING
AHU	AIR HANDLING UNIT	ENT	ENTERING	P	PUMP
AMB.	AMBIENT	ESP	EXTERNAL STATIC PRESSURE	QTY.	QUANTITY
ARCH	ARCHITECT OR ARCHITECTURAL	ETR	EXISTING TO REMAIN	RA	RETURN AIR
B	BOILER	EXH	EXHAUST	RAG	RETURN AIR GRILLE
BHP	BRAKE HORSE POWER	°F OR F	DEGREES FAHRENHEIT	RLA	RUNNING LOAD AMP
BTUH	BRITISH THERMAL UNIT PER HOUR	FCU	FAN COIL UNIT	RPM	REVOLUTIONS PER MINUTE
CAV	CONSTANT AIR VOLUME	FLA	FULL LOAD AMP.	SA	SUPPLY AIR
CFF	CAPPED FOR FUTURE	FPI	FINS PER INCH	SAG	SUPPLY AIR GRILLE
CD	CEILING DIFFUSER	FPM	FEET PER MINUTE	S.P.	STATIC PRESSURE
CFH	CUBIC FEET PER HOUR	HP	HORSEPOWER	SF	SQUARE FEET
CFM	CUBIC FEET PER MINUTE	HZ	HERTZ	SS OR *	STAINLESS STEEL
CLG	CEILING	IN. W.G.	INCH OF WATER GAGE	ST	SOUND TRAP
COP	COEFFICIENT OF PERFORMANCE	KBTUH	THOUSAND BTU PER HOUR	SWE	SIDE WALL EXHAUST
CV	CONSTANT VOLUME	(L)	INTERNALLY LINED DUCT INSULATION	SWR	SIDE WALL RETURN
DB	DRY-BULB	LBS	POUNDS	SWS	SIDE WALL SUPPLY
DIFF	DIFFUSER	MAX.	MAXIMUM	SWT	SIDE WALL TRANSFER
DN	DOWN	MCA	MINIMUM CIRCUIT AMP	TG	TRANSFER GRILLE
DS	DUCT SILENCER	MCC	MOTOR CONTROL CENTER	TYP	TYPICAL
DWG	DRAWING	MIN.	MINIMUM	UNO	UNLESS NOTED OTHERWISE
(E)	EXISTING	NC	NOISE CRITERIA	UTR	UP THROUGH ROOF
EAG	EXHAUST AIR GRILLE	OSA	OUTSIDE AIR	VAV	VARIABLE AIR VOLUME
EER	ENERGY EFFICIENCY RATIO			VTR	VENT THROUGH ROOF

NOTES FOR CCR T24 MANDATORY MEASURES

1. GENERAL: ALL EQUIPMENT AND SYSTEMS INSTALLED IN THIS PROJECT SHALL COMPLY WITH THE ENERGY EFFICIENCY STANDARDS FOR NON RESIDENTIAL BUILDINGS AS PUBLISHED BY THE STATE OF CALIFORNIA.

2. EQUIPMENT AND SYSTEMS EFFICIENCY
   - A HVAC EQUIPMENT SHALL MEET MINIMUM EFFICIENCY REQUIREMENTS AS SCHEDULED ON THE PLANS.
   - B DUCTS AND PIPING SHALL BE INSULATED IN ACCORDANCE WITH ENERGY EFFICIENCY STANDARD 123.
   - C AIR HANDING DUCT SYSTEMS SHALL BE CONSTRUCTED, INSTALLED, SEALED TO 1%%% LEAKAGE, AND INSULATED AS PROVIDED IN CHAPTER 6 OF THE UNIFORM MECHANICAL CODE AND THESE REGULATIONS.

3. VENTILATION
   - A BUILDING SHALL BE VENTILATED AS PROVIDED FOR ON THE PLANS.
   - B GRAVITY OR AUTOMATIC DAMPERS INTERLOCKED AND CLOSED ON FAN SHUTDOWN SHALL BE PROVIDED ON THE OUTSIDE AIR INTAKES AND DISCHARGES OF ALL SPACE CONDITIONING AND EXHAUST SYSTEMS.
   - C ALL GRAVITY VENTILATING SYSTEMS SHALL BE PROVIDED WITH AUTOMATIC OR READILY ACCESSIBLE MANUALLY OPERATED DAMPERS IN ALL OPENINGS TO THE OUTSIDE, EXCEPT FOR COMBUSTION AIR OPENINGS.
   - D AIR BALANCING: ALL SPACE CONDITIONING AND VENTILATION SYSTEMS SHALL BE BALANCED IN THE QUANTITIES SPECIFIED IN THESE PLANS, IN ACCORDANCE WITH THE ASSOCIATED AIR BALANCE (AABC) NATIONAL STANDARDS.
   - E OUTSIDE AIR CERTIFICATION: THE SYSTEMS SHALL PROVIDED THE MINIMUM OUTSIDE AIR AS SHOWN ON THE MECHANICAL DRAWINGS, AND SHALL BE MEASURED AND CERTIFIED BY THE INSTALLING LICENSED C-20 MECHANICAL CONTRACTOR.

4. WHEN COMPLETE THE BUILDING CLOSE-OUT MANUAL SHALL INCLUDE: AS-BUILT DOCUMENTS, MAINTENANCE REQUIREMENTS & SPARE PARTS LISTS, ORIGINAL SYSTEM DESIGN AND OPERATION INFORMATION, AND SHALL BE POSTED WITH APPROPRIATE CERTIFICATES AND DOCUMENTS FOR THE COLLEGE AND INSPECTOR.

2019 CALIFORNIA GREEN BUILDING STANDARDS CODE

5.410.4 TESTING, ADJUSTING AND BALANCING: DURING CONSTUCTION TAPE/BLANK OFF AND SEAL HVAC EQUIPMENT OPENINGS FROM CONSTRUCTION DEBRIS, DUST, AND WATER. CLOSE GRILLES, AIR OPENINGS, AND FIN COILS TO PREVENT CONTAMINATION INSIDE/OUITSIDE TO THE EQUIPMENT, TO THE FILTERS, AND THE DUCTWORK. DO NOT OPERATE THE EQUIPMENT AND DUCTWORK DURING THE CONSTRUCTION PERIOD UNTIL AFTER APPROVED CLEAN-UP IS COMPLETE. COVER EQUIPMENT AND PANELS TO PREVENT WEATHER, SPLASH AND WATER ENTRY. ANY ELECTRICAL PANELS AND COMPONENTS EXPOSED TO WATER OR DUST WILL NEED TO BE REPLACED AT NO COST TO THE OWNER.

5.410.4.4 REPORTING: DELIVER WRITTEN POINT TO POINT COMMISSIONING FUNCTIONALITY REPORT AND TEST AND BALANCE REPORT.

5.410.4.5.1 INSPECTIONS AND REPORTS: INSPECTIONS AND REPORTS DOCUMENTING THE ENTIRE SYSTEM HAS BEEN INSPECTIED AND APPROVED BY THE ENFORCING AGENCY.

5.504.3 COVERING OF DUCT OPENINGS AND PROTECTION OF MECHANICAL EQUIPMENT DURING CONSTRUCTION TIME OF ROUGH INSTALLATION AND DURING STORAGE ON THE CONSTRUCTION SITE AND UNTIL FINAL STARTUP OF THE HEATING, COOLING AND VENTILATING EQUIPMENT, ALL DUCT AND OTHER RELATED AIR DISTRIBUTION COMPONENT OPENINGS SHALL BE COVERED WITH TAPE, PLASTIC, SHEETMETAL OR OTHER METHODS ACCEPTABLE TO THE ENFORCING AGENCY TO REDUCE THE AMOUNT OF DUST, WATER AND DEBRIS WHICH MAY ENTER THE SYSTEM.

MEP COMPONENT ANCHORAGE NOTE

ALL MECHANICAL, PLUMBING, AND ELECTRICAL COMPONENTS SHALL BE ANCHORED AND INSTALLED PER THE DETAILS ON THE DSA APPROVED CONSTRUCTION DOCUMENTS. WHERE NO DETAIL IS INDICATED, THE FOLLOWING COMPONENTS SHALL BE ANCHORED OR BRACED TO MEET THE FORCE AND DISPLACEMENT REQUIREMENTS PRESCRIBED IN THE 2019 CBC, SECTIONS 1616A1.18 THROUGH 1616A1.26 AND ASCE 7-16 CHAPTER 13.26 AND 30.

1. ALL PERMANENT EQUIPMENT AND COMPONENTS.
2. TEMPORARY OR MOVABLE EQUIPMENT THAT IS PERMANENTLY ATTACHED (E.G. HARD WIRED) TO THE BUILDING UTILITY SERVICES SUCH AS ELECTRICITY, GAS OR WATER.
3. MOVABLE EQUIPMENT WHICH IS STATIONED IN ONE PLACE FOR MORE THAN 8 HOURS AND HEAVIER THAN 400 POUNDS ARE REQUIRED TO BE ANCHORED WITH TEMPORARY ATTACHMENTS.

FOR THOSE ELEMENTS THAT DO NOT REQUIRE DETAILS ON THE APPROVED DRAWINGS, THE INSTALLATION SHALL BE SUBJECT TO THE APPROVAL OF THE STRUCTURAL ENGINEER OF RECORD AND THE DSA DISTRICT STRUCTURAL ENGINEER. THE PROJECT INSPECTOR WILL VERIFY THAT ALL COMPONENTS AND EQUIPMENT HAVE BEEN ANCHORED IN ACCORDANCE WITH ABOVE REQUIREMENTS.

PIPING, DUCTWORK, AND ELECTRICAL DISTRIBUTION SYSTEM BRACING NOTE

PIPING, DUCTWORK, AND ELECTRICAL DISTRIBUTION SYSTEMS SHALL BE BRACED TO COMPLY WITH THE FORCES AND DISPLACEMENTS PRESCRIBED IN ASCE 7-16 SECTION 13.3 AS DEFINED IN ASCE 7-16 SECTION 13.6.5.6, 13.6.7, 13.6.8, AND 2019 CBC, SECTIONS 1616A1.23, 1616A1.24, 1615A1.25, AND 1616A.4.26.

THE METHOD OF SHOWING BRACING AND ATTACHMENTS TO THE STRUCTURE FOR THE IDENTIFIED DISTRIBUTION SYSTEM AREA AS NOTED BELOW, WHEN BRACING AND ATTACHMENTS ARE BASED ON A PRE-APPROVED INSTALLATION GUIDE (E.G., SMACNA, OR OSHPD OPM), COPIES OF THE MANUAL SHALL BE AVAILABLE ON THE JOBSITE PRIOR TO THE START OF HANGING AND BRACING OF THE PIPE, DUCTWORK, AND ELECTRICAL DISTRIBUTION SYSTEMS. STRUCTURAL NEEDED SPECIFIC DETAILS. THE STRUCTURAL ENGINEER OF RECORD SHALL VERIFY THE ADEQUACY OF THE STRUCTURE TO SUPPORT THE HANGER AND BRACE LOADS

MECHANICAL PIPING (MP), MECHANICAL DUCTS (MD), PLUMBING PIPING (PP), ELECTRICAL DISTRIBUTION SYSTEMS (E):

MP☒MD☐PP☐E☐ - OPTION 1: DETAILED ON THE APPROVED DRAWINGS WITH PROJECT SPECIFIC NOTES AND DETAILS.

MP☐MD☐PP☐E☐ - OPTION 2: SHALL COMPLY WITH THE APPLICABLE OSHPD PRE-APPROVED (OPM#) #OPM-0043-13 MASON WEST. THE CONTRACTOR SHALL SUBMIT CALCULATIONS AND SHOP DRAWINGS (STAMPED BY A REGISTERED STRUCTURAL ENGINEER) AS A DELEGATED SUBMITTAL OF THE SUPPORTS AND BRACIN SYSTEMS TO BE INSTALLED PER THE OPM PRE-APPROVAL. THE ENGINEER OF RECORD SHALL REVIEW THE DELEGATED SUBMITTAL AS NOTED ABOVE.

APPLICABLE CODES

2019	CALIFORNIA BUILDING STANDARDS ADMINISTRATIVE CODE, PART 1, TITLE 24 C.C.R.
2019	CALIFORNIA BUILDING CODE (VOL 1 & 2) (2018 INTERNATIONAL BUILDING CODE WITH CALIFORNIA AMENDMENTS)
2019	CALIFORNIA ELECTRICAL CODE, PART 3, TITLE 24 C.C.R., (2017 NATIONAL ELECTRICAL CODE WITH 2019 CALIFORNIA AMENDMENTS)
2019	CALIFORNIA MECHANICAL CODE, PART 4, TITLE 24 C.C.R. (2018 UNIFORM MECHANICAL CODE WITH 2019 CALIFORNIA AMENDMENTS)
2019	CALIFORNIA PLUMBING CODE, PART 5, TITLE 24 C.C.R. (2018 UNIFORM PLUMBING CODE WITH 2019 CALIFORNIA AMENDMENTS)
2019	CALIFORNIA ENERGY CODE, PART 6, TITLE 24 C.C.R.
2019	CALIFORNIA FIRE CODE, PART 9, TITLE 24 C.C.R. (2018 INTERNATIONAL FIRE CODE AND 2019 CALIFORNIA AMENDMENTS)
2019	CALIFORNIA GREEN BUILDING STANDARDS CODE, PART 11, TITLE 24 C.C.R.
2019	CALIFORNIA REFERENCE STANDARDS CODE, PART 12, TITLE 24 C.C.R.

MECHANICAL SHEET INDEX

SHEET	DESCRIPTION
M0.01	MECHANICAL LEGENDS, ABBREVIATIONS, & GENERAL NOTES
M0.02	MECHANICAL TITLE 24
M0.03	MECHANICAL TITLE 24
M0.04	MECHANICAL TITLE 24
M0.05	MECHANICAL TITLE 24
M2.01	FIRST FLOOR MECHANICAL ZONING PLAN
M2.02	SECOND FLOOR MECHANICAL ZONING PLAN
M2.11	FIRST FLOOR MECHANICAL PLAN
M2.12	SECOND FLOOR MECHANICAL PLAN
M2.13	MECHANICAL ROOF PLAN
M3.11	MECHANICAL PLAN - POOL BUILDING
M5.01	MECHANICAL DETAILS
M5.02	MECHANICAL DETAILS
M5.03	MECHANICAL DETAILS
M5.04	MECHANICAL DETAILS
M6.01	MECHANICAL SCHEDULES
M7.01	MECHANICAL CONTROL DIAGRAMS

ALFATECH
421 EAST HUNTINGTON DRIVE
MONROVIA, CA 91016
PHONE: (213) 212-9860
www.atce.com

CITY OF GARDENA INCORPORATED 1930 FREEWAY CITY

PREPARED BY:
SVA ARCHITECTS
6 HUTTON CENTRE DR, SUITE 1150
SANTA ANA, CA 92707
T 949.809.3380 WWW.SVA-ARCHITECTS.COM

THIS DOCUMENT CONTAINS INFORMATION PROPRIETARY TO SVA ARCHITECTS INC. AND IS FURNISHED IN CONFIDENCE FOR THE LIMITED PURPOSE OF EVALUATION, BIDDING OR REVIEW. THIS DOCUMENT OR ITS CONTENTS MAY NOT BE USED FOR ANY OTHER PURPOSE AND MAY NOT BE REPRODUCED OR DISCLOSED TO OTHERS WITHOUT THE PRIOR WRITTEN CONSENT OF SVA ARCHITECTS INC. ALL RIGHTS RESERVED, © COPYRIGHT 2018.

REGISTERED PROFESSIONAL ENGINEER NICHOLAS J. KOURETAS No. M31713 Exp. 6/30/2025 MECHANICAL STATE OF CALIFORNIA

REVISIONS

NO.	DESCRIPTION	DATE	APPROVED
1	90% CD SUBMITTAL	12/15/2022	
2	100% CD SUBMITTAL	05/01/2023	
3	FINAL SUBMITTAL	06/30/2023	

B.M.: THE CITY OF GARDENA BENCHMARK NO. SD-15
ELEV. = 43.508'

CITY OF GARDENA
DEPARTMENT OF PUBLIC WORKS - ENGINEERING

MECHANICAL LEGENDS, ABBREVIATIONS, & GENERAL NOTES

COMMUNITY AQUATICS & SENIOR CENTER

M0.01

	INITIAL	DATE
DESIGNED BY	NK/MZ	05/25/2022
DRAWN BY	MZ	04/20/23
CHECKED BY	NK	04/29/23

APPROVED BY:

APPROVED BY: DIRECTOR OF PUBLIC WORKS

SHT. 110 OF 195 DWG. NO. 5-2606

PLOT DATE: 7/26/2023 8:04:11 PM

STATE OF CALIFORNIA
Envelope Component Approach
NRCC-ENV-E — CALIFORNIA ENERGY COMMISSION

CERTIFICATE OF COMPLIANCE — **NRCC-ENV-E**

This document is used to demonstrate compliance with mandatory requirements in §110.8(e) and §120.7(b) for newly constructed buildings, and §141.0(b)1 for alterations, related to roof, wall and floor assemblies. It is also used to demonstrate compliance with prescriptive requirements in §140.3 for newly constructed buildings, and §141.0 for additions and alterations, related to roof, wall, floor, door, fenestration and daylighting requirements.

Project Name: The City of Gardena Senior Center and Aquatics — **Report Page:** (Page 1 of 21)
Project Address: 1654 W 166th Street — **Date Prepared:** 5/5/2023

A. GENERAL INFORMATION

01	Project Location (city)		05	# of Stories (Habitable Above Grade)	1
02	Zipcode	90247	06	Total Conditioned Floor Area (ft²)	9349
03	Climate Zone	8	07	Total Unconditioned Floor Area (ft²)	0
04	Occupancy Types Within Project: (select all that apply): If one occupancy constitutes >= 80% of the conditioned floor area, the entire building envelope may be designed to comply with the provisions of that occupancy per §100.0(f).		08	☐ Project includes unconditioned enclosed space(s) > 5,000 ft.² under a roof with a ceiling height of at least 15 ft.[1]	
	☒ All Nonresidential, including Relocatable Public School Building certified for use in one climate zone Occupancy: A / B / E / F / H / M / S / U	☐ Relocatable Public School Building for use in all climate zones Occupancy: E	☐ High-Rise Residential Occupancy: R-2 / R-3	☐ Hotel/Motel Guest Rooms Occupancy: R-1	

[1] *FOOTNOTE: Enclosed spaces > 5,000 ft.² directly under roof with ceiling height > 15 ft in climate zones 2 through 15 are required to meet the minimum daylighting requirements defined in §140.3(c). Compliance with §140.3(c) is documented in Table L. This is the only prescriptive requirement which applies to unconditioned spaces.*

B. PROJECT SCOPE

This table specifies project envelope components within the permit application demonstrating compliance using the prescriptive paths outlined in §140.3 and §141.0(a)1 and §141.0(b)1 and 2 for additions and alterations.

My project consists of (check all that apply)		Component Types					
		01		02			
☒	New Construction or Newly Conditioned Space	☒	Roof	☒	Walls	☒	Exterior Doors
	☐ One or more enclosed spaces > 5,000 ft.² directly under roof with ceiling height > 15ft			☐	Floors	☒	Fenestration/ Glazed Doors[1]
☐	Addition of conditioned space	☐	Roof	☐	Walls	☐	Exterior Doors
	☐ One or more enclosed spaces > 5,000 ft.² directly under roof with ceiling height > 15ft			☐	Floors	☐	Fenestration/ Glazed Doors[1]
☐	Alteration of conditioned space	☐	Roof Assembly	☐	Walls		Exterior Doors NA. for Alts.
	☐ One or more enclosed spaces > 5,000 ft.² directly under roof with ceiling height > 15ft and lighting system installed for the first time	☐	Roofing Material	☐	Floors	☐	Fenestration/ Glazed Doors

[1] *FOOTNOTE: Doors that are more than 25% glass in area are considered Glazed Doors and should be documented on table K with fenestration.*

Registration Number: — Registration Date/Time: — Registration Provider: Energysoft
CA Building Energy Efficiency Standards - 2019 Nonresidential Compliance — Report Version: 2019.1.003 Schema Version: rev 20200601 — Report Generated: 2023-05-05 13:12:59

STATE OF CALIFORNIA
Envelope Component Approach
NRCC-ENV-E — CALIFORNIA ENERGY COMMISSION

CERTIFICATE OF COMPLIANCE — **NRCC-ENV-E**

Project Name: The City of Gardena Senior Center and Aquatics — **Report Page:** (Page 2 of 21)
Project Address: 1654 W 166th Street — **Date Prepared:** 5/5/2023

C. COMPLIANCE RESULTS

Results in this table are automatically calculated from data input and calculations in Tables F through L. Note: If any cell on this table says "COMPLIES with Exceptional Conditions" refer to Table D. Exceptional Conditions for guidance or see the applicable table referenced below.

Opaque Envelope Components							
Roof Assembly	Roofing Materials	Walls	Floors	Doors	Fenestration	Daylighting Spaces > 5,000ft²	Compliance Results
01	02	03	04	05	06	07	08
(See Table F)	(See Table G)	(See Table H)	(See Table I)	(See Table J)	(See Table K)	(See Table L)	COMPLIES
Yes	Yes	Yes		Yes	Yes		

D. EXCEPTIONAL CONDITIONS

This table is auto-filled with uneditable comments because of selections made or data entered in tables throughout the form.

E. ADDITIONAL REMARKS

This table includes remarks made by the permit applicant to the Authority Having Jurisdiction.

F. ROOF ASSEMBLY SCHEDULE

This table demonstrates compliance for prescriptive roof assembly requirements in §140.3(a)1B for new construction or additions, or §141.0(b)2BIII for alterations.

01 — Indicate roof types included in the project: ☒ Framed ☐ SIPS ☐ Span Deck & Concrete ☐ Metal Panels ☐ Metal Building

Framed Roof Assemblies

01: ☒ Include Framed Roof Assemblies in Area-Weighted Average U-factor Calculation[1]

02	03	04	05	06
Tag/Plan Detail ID	Name/Description	Status	Exception to Roof Insulation Requirements in §141.0(b)2BiII (Alts. Only)	Occupancy Type
R-30 Roof Cathedral_Gardena	Roof	New		Nonresidential/ Relocatable 1 CZ
R-30 Roof Cathedral_Gardena	Roof	New		Nonresidential/ Relocatable 1 CZ
R-30 Roof Cathedral_Gardena	Roof	New		Nonresidential/ Relocatable 1 CZ
R-30 Roof Cathedral_Gardena	Roof	New		Nonresidential/ Relocatable 1 CZ

[1] *FOOTNOTES: Mixed Roof Assemblies: Area-Weighted Average U-factor Calculation is required when more than one roof assembly is specified in the project. Refer to §140.3(a)1B for new construction or additions, or §141.0(b)2B for alterations.*

Registration Number: — Registration Date/Time: — Registration Provider: Energysoft
CA Building Energy Efficiency Standards - 2019 Nonresidential Compliance — Report Version: 2019.1.003 Schema Version: rev 20200601 — Report Generated: 2023-05-05 13:12:59

STATE OF CALIFORNIA
Envelope Component Approach
NRCC-ENV-E — CALIFORNIA ENERGY COMMISSION

CERTIFICATE OF COMPLIANCE — **NRCC-ENV-E**

Project Name: The City of Gardena Senior Center and Aquatics — **Report Page:** (Page 3 of 21)
Project Address: 1654 W 166th Street — **Date Prepared:** 5/5/2023

F. ROOF ASSEMBLY SCHEDULE

Framed Roof Assemblies

07	08	09	10	11	12	13	14	15		16
Tag/Plan Detail ID	How Design U-factor was determined	Roof Type & Frame Material	Frame Spacing Depth	Cavity Insulation per Design	Continuous Insulation per Design	Thermal Performance Unit	Required Thermal Performance	U-factor per Design		Net Area[1] ft²
R-30 Roof Cathedral_Gardena	Roof	New						Nonresidential/ Relocatable 1 CZ	

CERTIFICATE OF COMPLIANCE		NRCC-ENV-E
Project Name:	The City of Gardena Senior Center and Aquatics	Report Page: (Page 17 of 21)
Project Address:	1654 W 166th Street	Date Prepared: 5/5/2023

K. FENESTRATION AND GLAZED DOOR SCHEDULE

Vertical Fenestration And Glazed Doors- U-factor, Solar Heat Gain Coefficient (RSHGC/ SHGC), Visible Transmittance (VT)

04	05	06	07	08	09		10	11	12	13
Tag/Plan Detail ID	Fenestration Type	Occupancy & Status	(R)SHGC Compliance Method	VT Compliance Method	Calculation Method for Performance Values per Design[2]		Product Performance Unit	Required Product Performance	Product Performance per Design	Area ft[2]
Win	Fixed window	Nonresidential/ Relocatable 1 CZ : New			NFRC Certified	U-factor (max)	0.36	0.36		
					☐ Overhang used for RSHGC	(R)SHGC (max)	0.25	0.25		74
						VT (min)	0.42	0.42		
Win	Fixed window	Nonresidential/ Relocatable 1 CZ : New			NFRC Certified	U-factor (max)	0.36	0.36		
					☐ Overhang used for RSHGC	(R)SHGC (max)	0.25	0.25		43
						VT (min)	0.42	0.42		
Win	Fixed window	Nonresidential/ Relocatable 1 CZ : New			NFRC Certified	U-factor (max)	0.36	0.36		
					☐ Overhang used for RSHGC	(R)SHGC (max)	0.25	0.25		40
						VT (min)	0.42	0.42		
Win	Fixed window	Nonresidential/ Relocatable 1 CZ : New			NFRC Certified	U-factor (max)	0.36	0.36		
					☐ Overhang used for RSHGC	(R)SHGC (max)	0.25	0.25		32
						VT (min)	0.42	0.42		
Win	Fixed window	Nonresidential/ Relocatable 1 CZ : New			NFRC Certified	U-factor (max)	0.36	0.36		
					☐ Overhang used for RSHGC	(R)SHGC (max)	0.25	0.25		108
						VT (min)	0.42	0.42		
Win	Fixed window	Nonresidential/ Relocatable 1 CZ : New			NFRC Certified	U-factor (max)	0.36	0.36		
					☐ Overhang used for RSHGC	(R)SHGC (max)	0.25	0.25		108
						VT (min)	0.42	0.42		

Registration Number: | Registration Date/Time: | Registration Provider: Energysoft

CA Building Energy Efficiency Standards - 2019 Nonresidential Compliance | Report Version: 2019.1.003 Schema Version: rev 20200601 | Report Generated: 2023-05-05 13:12:59

CERTIFICATE OF COMPLIANCE		NRCC-ENV-E
Project Name:	The City of Gardena Senior Center and Aquatics	Report Page: (Page 18 of 21)
Project Address:	1654 W 166th Street	Date Prepared: 5/5/2023

K. FENESTRATION AND GLAZED DOOR SCHEDULE

Vertical Fenestration And Glazed Doors- U-factor, Solar Heat Gain Coefficient (RSHGC/ SHGC), Visible Transmittance (VT)

04	05	06	07	08	09		10	11	12	13
Tag/Plan Detail ID	Fenestration Type	Occupancy & Status	(R)SHGC Compliance Method	VT Compliance Method	Calculation Method for Performance Values per Design[2]		Product Performance Unit	Required Product Performance	Product Performance per Design	Area ft[2]
Win	Fixed window	Nonresidential/ Relocatable 1 CZ : New			NFRC Certified	U-factor (max)	0.36	0.36		
					☐ Overhang used for RSHGC	(R)SHGC (max)	0.25	0.25		108
						VT (min)	0.42	0.42		
Win	Fixed window	Nonresidential/ Relocatable 1 CZ : New			NFRC Certified	U-factor (max)	0.36	0.36		
					☐ Overhang used for RSHGC	(R)SHGC (max)	0.25	0.25		58
						VT (min)	0.42	0.42		
Win	Fixed window	Nonresidential/ Relocatable 1 CZ : New			NFRC Certified	U-factor (max)	0.36	0.36		
					☐ Overhang used for RSHGC	(R)SHGC (max)	0.25	0.25		69
						VT (min)	0.42	0.42		
Win	Fixed window	Nonresidential/ Relocatable 1 CZ : New			NFRC Certified	U-factor (max)	0.36	0.36		
					☐ Overhang used for RSHGC	(R)SHGC (max)	0.25	0.25		85
						VT (min)	0.42	0.42		
Win	Fixed window	Nonresidential/ Relocatable 1 CZ : New			NFRC Certified	U-factor (max)	0.36	0.36		
					☐ Overhang used for RSHGC	(R)SHGC (max)	0.25	0.25		41
						VT (min)	0.42	0.42		
Win	Fixed window	Nonresidential/ Relocatable 1 CZ : New			NFRC Certified	U-factor (max)	0.36	0.36		
					☐ Overhang used for RSHGC	(R)SHGC (max)	0.25	0.25		50
						VT (min)	0.42	0.42		

Registration Number: | Registration Date/Time: | Registration Provider: Energysoft

CA Building Energy Efficiency Standards - 2019 Nonresidential Compliance | Report Version: 2019.1.003 Schema Version: rev 20200601 | Report Generated: 2023-05-05 13:12:59

CERTIFICATE OF COMPLIANCE		NRCC-ENV-E
Project Name:	The City of Gardena Senior Center and Aquatics	Report Page: (Page 19 of 21)
Project Address:	1654 W 166th Street	Date Prepared: 5/5/2023

K. FENESTRATION AND GLAZED DOOR SCHEDULE

Overhang Details for RSHGC per §140.3

26	27	28	29	30	31	32
SHGC of Window	Depth (ft)	Height from Bottom of Sill to Overhang (ft)	Left Extent[3] (ft)	Right Extent[3] (ft)	Orientation	RSHGC
0.25	10	0.1	10	10	North Facing	0.198

FOOTNOTES: If any individual fenestration product is non-compliant, products may show compliance using an area-weighted calculation. Chromogenic glazing is not included in area-weighted calculations. Area-weighted calculation shown in separate area-weighted table below.

[2]The NA6 Default Calculation can only be used for buildings with less than 2000ft[2] of site built glazing. If the project has greater than 2000ft[2], the only options for determining fenestration values are NFRC Certification or the Default Tables in 110.6.

[3] Overhangs must extend past the left and right window the same distance as the depth of the overhang or greater to show an affect on the RSHGC. If an overhang does not meet this requirement, the effect of the overhang will be ignored.

[4]Projecting includes casement and awning windows.

Area-Weighted Average U-factor, SHGC, VT Compliance Calculation for Vertical Fenestration And Glazed Doors

01	02	03		04		05	
Product Performance Unit	Total Area of Fenestration (ft[2])	Area-weighted Calculation for Fenestration		Compliance Results Using Area-Weighted Calculation Option			
		Required		Designed			
U-Factor	1857	0.36		0.36		COMPLIES	
(R)SHGC	1857	0.25		0.248		COMPLIES	
VT	1857	0.42		0.42		COMPLIES	

L. DAYLIGHT IN LARGE ENCLOSED SPACES

This section does not apply to this project.

Registration Number: | Registration Date/Time: | Registration Provider: Energysoft

CA Building Energy Efficiency Standards - 2019 Nonresidential Compliance | Report Version: 2019.1.003 Schema Version: rev 20200601 | Report Generated: 2023-05-05 13:12:59

CERTIFICATE OF COMPLIANCE		NRCC-ENV-E
Project Name:	The City of Gardena Senior Center and Aquatics	Report Page: (Page 20 of 21)
Project Address:	1654 W 166th Street	Date Prepared: 5/5/2023

M. DECLARATION OF REQUIRED CERTIFICATES OF INSTALLATION

Selections have been made based on information provided in this document. If any selection have been changed by the permit applicant, an explanation should be included in Table E Additional Remarks. These documents must be provided to the building inspector during construction and can be found online at https://www.energy.ca.gov/title24/2019standards/2019_compliance_documents/Nonresidential_Documents/NRCI/

Form/Title	Field Inspector	
	Pass	Fail
NRCI-ENV-01-E - Must be submitted for all buildings	☐	☐

N. DECLARATION OF REQUIRED CERTIFICATES OF ACCEPTANCE

Selections have been made based on information provided in previous tables of this document. If any selection needs to be changed, form user must provide an explanation in Table E Additional Remarks. These documents must be provided to the building inspector during construction and can be found online at https://www.energy.ca.gov/title24/2019standards/2019_compliance_documents/Nonresidential_Documents/NRCA/. Individuals who perform the field testing and verification work, and provide the information required for completion of the fenestration Certificate of Acceptance documentation are not required to be licensed professionals. However, the person who signs the Certificate of Acceptance document to certify compliance with the acceptance requirements shall be licensed as specified in Standards Section 10-103(a)4 and NA7.3.1

Form/Title	Systems/Spaces To Be Field Verified	Field Inspector	
		Pass	Fail
NRCA-ENV-02-F must be submitted for all new, added or altered fenestration.	☐	☐	

Registration Number: | Registration Date/Time: | Registration Provider: Energysoft

CA Building Energy Efficiency Standards - 2019 Nonresidential Compliance | Report Version: 2019.1.003 Schema Version: rev 20200601 | Report Generated: 2023-05-05 13:12:59

CERTIFICATE OF COMPLIANCE		NRCC-ENV-E
Project Name:	The City of Gardena Senior Center and Aquatics	Report Page: (Page 21 of 21)
Project Address:	1654 W 166th Street	Date Prepared: 5/5/2023

DOCUMENTATION AUTHOR'S DECLARATION STATEMENT

I certify that this Certificate of Compliance documentation is accurate and complete.

Documentation Author Name: Nikolaos J. Kourasios	Documentation Author Signature:
Company: Alfa Tech	Signature Date: 2023-05-05
Address: 421 E. Huntington Dr.	CEA/ HERS Certification Identification (If applicable): MI31713
City/State/Zip: Monrovia CA 91016	Phone: (213) 212-9860

RESPONSIBLE PERSON'S DECLARATION STATEMENT

I certify the following under penalty of perjury, under the laws of the State of California:

1. The information provided on this Certificate of Compliance is true and correct.
2. I am eligible under Division 3 of the Business and Professions Code to accept responsibility for the building design or system design identified on this Certificate of Compliance (responsible designer)
3. The energy features and performance specifications, materials, components, and manufactured devices for the building design or system design identified on this Certificate of Compliance conform to the requirements of Title 24, Part 1 and Part 6 of the California Code of Regulations.
4. The building design features or system design features identified on this Certificate of Compliance are consistent with the information provided on other applicable compliance documents, worksheets, calculations, plans and specifications submitted to the enforcement agency for approval with this building permit application.
5. To the best of my knowledge, a completed signed copy of this Certificate of Compliance shall be made available with the building permit(s) issued for the building, and made available to the enforcement agency for all applicable inspections. I understand that a completed signed copy of this Certificate of Compliance is required to be included with the documentation the builder provides to the building owner at occupancy.

Responsible Designer Name: Bob Simons	Responsible Designer Signature:
Company: SVA Architects, Inc.	Date Signed: 2023-05-05
Address: 6 Hutton Centre Drive, Suite 1150	License: C-18301
City/State/Zip: Santa Ana CA 92707	Phone: 949.809.3380

Registration Number: | Registration Date/Time: | Registration Provider: Energysoft

CA Building Energy Efficiency Standards - 2019 Nonresidential Compliance | Report Version: 2019.1.003 Schema Version: rev 20200601 | Report Generated: 2023-05-05 11:31:25

CERTIFICATE OF COMPLIANCE		NRCC-MCH-E
Project Name:	The City of Gardena Senior Center and Aquatics	Report Page: (Page 1 of 29)
Project Address:	1654 W 166th Street	Date Prepared: 5/5/2023

This document is used to demonstrate compliance for mechanical systems that are within the scope of the permit application and are demonstrating compliance using the prescriptive path outlined in §140.4, or §141.0(b)2 for alterations.

A. GENERAL INFORMATION

01	Project Location (city)	Gardena	04	Total Conditioned Floor Area	9349
02	Climate Zone	8	05	Total Unconditioned Floor Area	0
03	Occupancy Types Within Project:		06	# of Stories (Habitable Above Grade)	1
☒	Office (B)	☐ Retail (M)	☐	Non-refrigerated Warehouse (S)	
☐	Hotel/ Motel Guest Rooms (R-1)	☐ School (E)	☐	Healthcare Facility (I)	
☐	High-Rise Residential (R-2/R-3)	☐ Relocatable Class Bldg (E)	☒	Other (write in)	See Table J

B. PROJECT SCOPE

This table includes mechanical systems or components that are within the scope of the permit application and are demonstrating compliance using the prescriptive path outlined in §140.4, or §141.0(b)2 for alterations.

01	02	03
Air System(s)	Wet System Components	Dry System Components
☒ Heating Air System	☐ Water Economizer	☒ Air Economizer
☒ Cooling Air System	☐ Pumps	☐ Electric Resistance Heat
Mechanical Controls	☐ System Piping	☒ Fan Systems
☒ Mechanical Controls (existing to remain, altered or new)	☐ Cooling Towers	☒ Ductwork (existing to remain, altered or new)
	☐ Chillers	☒ Ventilation
	☐ Boilers	☐ Zonal Systems/ Terminal Boxes

Registration Number: | Registration Date/Time: | Registration Provider: Energysoft

CA Building Energy Efficiency Standards - 2019 Nonresidential Compliance | Report Version: 2019.1.003 Schema Version: rev 20200601 | Report Generated: 2023-05-05 13:12:59

CERTIFICATE OF COMPLIANCE		NRCC-MCH-E
Project Name:	The City of Gardena Senior Center and Aquatics	Report Page: (Page 2 of 29)
Project Address:	1654 W 166th Street	Date Prepared: 5/5/2023

C. COMPLIANCE RESULTS

Table C will indicate if the project data input into the compliance document is compliant with mechanical requirements. This table is not editable by the user. If this table says "DOES NOT COMPLY" or "COMPLIES with Exceptional Conditions" refer to Table D, or the table indicated as not compliant for guidance.

01		02		03		04		05		06		07		08	09
System Summary §110.1, §110.2, §140.4	AND	Pumps §140.4(k)	AND	Fans/ Economizers §140.4(c), §140.4(e)	AND	System Controls §110.2, §120.2, §140.4(f)	AND	Ventilation §120.1	AND	Terminal Box Controls §140.4(d)	AND	Distribution §120.3, §140.4(l)	AND	Cooling Towers §110.2(e)2	Compliance Results
(See Table F)		(See Table G)		(See Table H)		(See Table I)		(See Table J)		(See Table K)		(See Table L)		(See Table M)	
Yes	AND		AND	Yes	AND	Yes	AND	Yes	AND		AND	Yes	AND		COMPLIES
Mandatory Measures Compliance (See Table Q for Details)															COMPLIES

D. EXCEPTIONAL CONDITIONS

This table is auto-filled with unedittable comments because of selections made or data entered in tables throughout the form.

E. ADDITIONAL REMARKS

This table includes remarks made by the permit applicant to the Authority Having Jurisdiction.

Registration Number: | Registration Date/Time: | Registration Provider: Energysoft

CA Building Energy Efficiency Standards - 2019 Nonresidential Compliance | Report Version: 2019.1.003 Schema Version: rev 20200601 | Report Generated: 2023-05-05 13:12:59

CERTIFICATE OF COMPLIANCE		NRCC-MCH-E
Project Name:	The City of Gardena Senior Center and Aquatics	Report Page: (Page 3 of 29)
Project Address:	1654 W 166th Street	Date Prepared: 5/5/2023

F. HVAC SYSTEM SUMMARY (DRY & WET SYSTEMS)

This table is used to demonstrate compliance for mechanical equipment with mandatory requirements found in §110.1 and §110.2(a) and prescriptive requirements found in §140.4(a), §140.4(b) and §141.0(b)2 for alterations.

Dry System Equipment Sizing (includes air conditioners, condensers, heat pumps, VRF, furnaces and unit heaters)

01	02	03	04	05	06	07	08	09	10	11
				Equipment Sizing per Mechanical Schedule (kBtu/h) §140.4 (a&b)						
				Heating Output[1,3]			Cooling Output[2,3]		Load Calculations[3,4]	
Name or Item Tag	Equipment Category per Tables 110.2	Equipment Type per Tables 110.2 / Title 20	Smallest Size Available[5] §140.4(a)	Per Design (kBtu/h)	Rated (kBtu/h)	Supp. Heating Output (kBtu/h)	Sensible Per Design (kBtu/h)	Rated (kBtu/h)	Total Heating Load (kBtu/h)	Total Sensible Cooling Load (kBtu/h)
1F RTU 1-1 Senior Daycare	Unitary Heat Pumps	Air-cooled, pkg (3 phase)	NA: Load Controls	66.75	73.65	13.04	52.75	56.37	32.68	54.56
1F RTU 1-2 Lobby and Office	Unitary Heat Pumps	Air-cooled, pkg (3 phase)	NA: Load Controls	44.88	43.66	13.04	33.11	36.86	34.19	56.35
1F FC_CU-1-1 Inverter	Unitary Heat Pumps	Air-cooled, split (1phase)	NA: Load Controls	10.21	14	0	8.64	9	1.77	8.93
1F FC_CU-1-2 Elev Control	Unitary Heat Pumps	Air-cooled, split (1phase)	NA: Load Controls	13.86	19	0	12.39	13.14	3.05	12.85
1F FC-CU-1-3 Life Guard	Unitary Heat Pumps	Air-cooled, split (1phase)	NA: Load Controls	10.21	14	0	8.68	9	5.12	8.73
2F RTU 2-4 Lounge and Circulation	Unitary Heat Pumps	Air-cooled, pkg (3 phase)	NA: Load Controls	54.32	56.6	13.04	42.41	46.64	35.56	68.49
2F RTU 2-1 Classroom	Unitary Heat Pumps	Air-cooled, pkg (3 phase)	NA: Load Controls	44.88	43.66	13.04	35.42	36.86	29.05	40.97
2F RTU 2-2 Classroom	Unitary Heat Pumps	Air-cooled, pkg (3 phase)	NA: Load Controls	44.88	43.66	13.04	35.43	36.86	28.29	40.57

Registration Number: | Registration Date/Time: | Registration Provider: Energysoft

CA Building Energy Efficiency Standards - 2019 Nonresidential Compliance | Report Version: 2019.1.003 Schema Version: rev 20200601 | Report Generated: 2023-05-05 13:12:59

CERTIFICATE OF COMPLIANCE		NRCC-MCH-E
Project Name:	The City of Gardena Senior Center and Aquatics	Report Page: (Page 4 of 29)
Project Address:	1654 W 166th Street	Date Prepared: 5/5/2023

F. HVAC SYSTEM SUMMARY (DRY & WET SYSTEMS)

Dry System Equipment Sizing (includes air conditioners, condensers, heat pumps, VRF, furnaces and unit heaters)

01	02	03	04	05	06	07	08	09	10	11
2F RTU 2-3 Classroom	Unitary Heat Pumps	Air-cooled, pkg (3 phase)	NA: Load Controls	44.88	43.66	13.04	35.36	36.86	27.22	38.97
2F RTU 2-5 Classroom	Unitary Heat Pumps	Air-cooled, pkg (3 phase)	NA: Load Controls	44.88	43.66	13.04	35.35	36.86	28.98	41.93
1F MAU 1-1 Restroom and Shower	Unitary AC/ Condensers	AC, air-cooled pkg (3 phase)	NA: Load Controls	95	95	0	0	0	137.66	60.64

[1]FOOTNOTES: Equipment shall be the smallest size, within the available options of the desired equipment line, necessary to meet the design heating and cooling loads of the building per §140.4(a). Heathcare facilities are excepted.

[2]It is common practice to show rated output capacity on the equipment schedule. Sensible cooling output comes from specification sheet tables.

[3] If equipment is heating only, leave cooling output and load blank. If equipment is cooling only, leave heating output and load blank.

[4] Authority Having Jurisdiction may ask for load calculations used for compliance per §140.4(b).

Dry System Equipment Efficiency (other than Package Terminal Air Conditioners (PTAC) and Package Terminal Heat Pumps (PTHP))

01	02	03	04	05	06	07	08	09
		Heating Mode				Cooling Mode		
Name or Item Tag	Size Category (Btu/h)	Rating Condition (°F)	Efficiency Unit	Minimum Efficiency Required per Tables 110.2 / Title 20	Design Efficiency	Efficiency Unit	Minimum Efficiency Required per Tables 110.2 / Title 20	Design Efficiency
1F RTU 1-1 Senior Daycare	>=65,000 and <135,000		COP	3.3	3.5	EER IEER	11 12.2	12.1 15.5
1F RTU 1-2 Lobby and Office	<65,000		HSPF	7.7	8.8	SEER	13.0	16.5
1F FC_CU-1-1 Inverter	<65,000		HSPF	8.2	10.2	SEER	14.0	21
1F FC_CU-1-2 Elev Control	<65,000		HSPF	8.2	11.2	SEER	14.0	19.8

Registration Number: | Registration Date/Time: | Registration Provider: Energysoft

CA Building Energy Efficiency Standards - 2019 Nonresidential Compliance | Report Version: 2019.1.003 Schema Version: rev 20200601 | Report Generated: 2023-05-05 13:12:59

CERTIFICATE OF COMPLIANCE		NRCC-MCH-E
Project Name:	The City of Gardena Senior Center and Aquatics	Report Page: (Page 5 of 29)
Project Address:	1654 W 166th Street	Date Prepared: 5/5/2023

F. HVAC SYSTEM SUMMARY (DRY & WET SYSTEMS)

Dry System Equipment Efficiency (other than Package Terminal Air Conditioners (PTAC) and Package Terminal Heat Pumps (PTHP))

01	02	03	04	05	06	07	08	09
		Heating Mode				Cooling Mode		
Name or Item Tag	Size Category (Btu/h)	Rating Condition (°F)	Efficiency Unit	Minimum Efficiency Required per Tables 110.2 / Title 20	Design Efficiency	Efficiency Unit	Minimum Efficiency Required per Tables 110.2 / Title 20	Design Efficiency
1F FC-CU 1-3 Life Guard	<65,000		HSPF	8.2	10.2	SEER	14.0	21
2F RTU 2-4 Lounge and Circulation	<65,000		HSPF	7.7	9	SEER	13.0	16.2
2F RTU 2-1 Classroom	<65,000		HSPF	7.7	8.8	SEER	13.0	16.5
2F RTU 2-2 Classroom	<65,000		HSPF	7.7	8.8	SEER	13.0	16.5
2F RTU 2-3 Classroom	<65,000		HSPF	7.7	8.8	SEER	13.0	16.5
2F RTU 2-5 Classroom	<65,000		HSPF	7.7	8.8	SEER	13.0	16.5
1F MAU 1-1 Restroom and Shower	<65,000		AFUE	0.80	0.8	SEER	13.0	15

G. PUMPS

This section does not apply to this project.

Registration Number: | Registration Date/Time: | Registration Provider: Energysoft

CA Building Energy Efficiency Standards - 2019 Nonresidential Compliance | Report Version: 2019.1.003 Schema Version: rev 20200601 | Report Generated: 2023-05-05 13:12:59

CERTIFICATE OF COMPLIANCE		NRCC-MCH-E
Project Name:	The City of Gardena Senior Center and Aquatics	Report Page: (Page 6 of 29)
Project Address:	1654 W 166th Street	Date Prepared: 5/5/2023

H. FAN SYSTEMS & AIR ECONOMIZERS

This table is used to demonstrate compliance with prescriptive requirements found in §140.4(c), §140.4(e) and §140.4(m) for fan systems. Fan systems serving only process loads are exempt from these requirements and do not need to be included in Table H.

System Name:	1F RTU 1-1 Senior Daycare	Economizer[1]	Fixed Temperature	Economizer Controls:	Designed per §140.4(e) and (m)	System Fan Type:	Constant Volume
01	02	03	04	05	06	07	08
Fan Name or Item Tag	Fan Function	Qty	Maximum Design Supply Airflow (CFM)	HP Unit[2]	Design HP	Fan Power Pressure Drop Adjustment - Table 140.4-B	
						Device	Design Airflow through Device (CFM)
SF	Supply	1	2400	BHP	2.65		
Total System Design Supply Airflow (CFM):			2400	Total System Design (BHP):	2.65	Maximum System Fan Power (BHP):	

System Name:	1F RTU 1-2 Lobby and Office	Economizer[1]	NA: <=54 kBtu/h cooling	Economizer Controls:	Designed per §140.4(e) and (m)	System Fan Type:	Constant Volume
01	02	03	04	05	06	07	08
Fan Name or Item Tag	Fan Function	Qty	Maximum Design Supply Airflow (CFM)	HP Unit[2]	Design HP	Fan Power Pressure Drop Adjustment - Table 140.4-B	
						Device	Design Airflow through Device (CFM)
SF	Supply	1	1600	BHP	1.5		
Total System Design Supply Airflow (CFM):			1600	Total System Design (BHP):	1.5	Maximum System Fan Power (BHP):	

System Name:	1F MAU 1-1 Restroom and Shower	Economizer[1]	NA: <=54 kBtu/h cooling	Economizer Controls:	Designed per §140.4(e) and (m)	System Fan Type:	Constant Volume
01	02	03	04	05	06	07	08
Fan Name or Item Tag	Fan Function	Qty	Maximum Design Supply Airflow (CFM)	HP Unit[2]	Design HP	Fan Power Pressure Drop Adjustment - Table 140.4-B	
						Device	Design Airflow through Device (CFM)
SF	Supply	1	2300	BHP	1.5		
EF	Exhaust	1	0	BHP	0.1		
Total System Design Supply Airflow (CFM):			2300	Total System Design (BHP):	1.6	Maximum System Fan Power (BHP):	

Registration Number: | Registration Date/Time: | Registration Provider: Energysoft

CA Building Energy Efficiency Standards - 2019 Nonresidential Compliance | Report Version: 2019.1.003 Schema Version: rev 20200601 | Report Generated: 2023-05-05 13:12:59

CERTIFICATE OF COMPLIANCE		NRCC-MCH-E
Project Name:	The City of Gardena Senior Center and Aquatics	Report Page: (Page 7 of 29)
Project Address:	1654 W 166th Street	Date Prepared: 5/5/2023

H. FAN SYSTEMS & AIR ECONOMIZERS

System Name:	1F FC_CU-1-1 Inverter	Economizer[1]	NA: <=54 kBtu/h cooling	Economizer Controls:	Designed per §140.4(e) and (m)	System Fan Type:	Constant Volume
01	02	03	04	05	06	07	08
Fan Name or Item Tag	Fan Function	Qty	Maximum Design Supply Airflow (CFM)	HP Unit[2]	Design HP	Fan Power Pressure Drop Adjustment - Table 140.4-B	
						Device	Design Airflow through Device (CFM)
SF	Supply	1	360	BHP	0.06		
EF	Exhaust	1	0	BHP	0.1		
Total System Design Supply Airflow (CFM):			360	Total System Design (BHP):	0.16	Maximum System Fan Power (BHP):	

System Name:	1F FC_CU-1-2 Elev Control	Economizer[1]	NA: <=54 kBtu/h cooling	Economizer Controls:	Designed per §140.4(e) and (m)	System Fan Type:	Constant Volume
01	02	03	04	05	06	07	08
Fan Name or Item Tag	Fan Function	Qty	Maximum Design Supply Airflow (CFM)	HP Unit[2]	Design HP	Fan Power Pressure Drop Adjustment - Table 140.4-B	
						Device	Design Airflow through Device (CFM)
SF	Supply	1	450	BHP	0.06		
EF	Exhaust	1	0	BHP	0.1		
Total System Design Supply Airflow (CFM):			450	Total System Design (BHP):	0.16	Maximum System Fan Power (BHP):	

System Name:	1F FC-CU 1-3 Life Guard	Economizer[1]	NA: <=54 kBtu/h cooling	Economizer Controls:	Designed per §140.4(e) and (m)	System Fan Type:	Constant Volume
01	02	03	04	05	06	07	08
Fan Name or Item Tag	Fan Function	Qty	Maximum Design Supply Airflow (CFM)	HP Unit[2]	Design HP	Fan Power Pressure Drop Adjustment - Table 140.4-B	
						Device	Design Airflow through Device (CFM)
SF	Supply	1	360	BHP	0.06		
Total System Design Supply Airflow (CFM):			360	Total System Design (BHP):	0.06	Maximum System Fan Power (BHP):	

Registration Number: | Registration Date/Time: | Registration Provider: Energysoft

CA Building Energy Efficiency Standards - 2019 Nonresidential Compliance | Report Version: 2019.1.003 Schema Version: rev 20200601 | Report Generated: 2023-05-05 13:12:59

CERTIFICATE OF COMPLIANCE		NRCC-MCH-E
Project Name:	The City of Gardena Senior Center and Aquatics	Report Page: (Page 8 of 29)
Project Address:	1654 W 166th Street	Date Prepared: 5/5/2023

H. FAN SYSTEMS & AIR ECONOMIZERS

System Name:	2F RTU 2-4 Lounge and Circulation	Economizer[1]	Fixed Temperature	Economizer Controls:	Designed per §140.4(e) and (m)	System Fan Type:	Constant Volume
01	02	03	04	05	06	07	08
Fan Name or Item Tag	Fan Function	Qty	Maximum Design Supply Airflow (CFM)	HP Unit[2]	Design HP	Fan Power Pressure Drop Adjustment - Table 140.4-B	
						Device	Design Airflow through Device (CFM)
SF	Supply	1	2000	BHP	1.5		
Total System Design Supply Airflow (CFM):			2000	Total System Design (BHP):	1.5	Maximum System Fan Power (BHP):	

System Name:	2F RTU 2-1 Classroom	Economizer[1]	NA: <=54 kBtu/h cooling	Economizer Controls:	Designed per §140.4(e) and (m)	System Fan Type:	Constant Volume
01	02	03	04	05	06	07	08
Fan Name or Item Tag	Fan Function	Qty	Maximum Design Supply Airflow (CFM)	HP Unit[2]	Design HP	Fan Power Pressure Drop Adjustment - Table 140.4-B	
						Device	Design Airflow through Device (CFM)
SF	Supply	1	1600	BHP	1.5		
Total System Design Supply Airflow (CFM):			1600	Total System Design (BHP):	1.5	Maximum System Fan Power (BHP):	

| System Name: | 2F RTU 2-2 Classroom | Economizer[1] | NA: <=54 kBtu/h cooling | Economizer Controls: | Designed per §140.4(e) and

STATE OF CALIFORNIA
Mechanical Systems
NRCC-MCH-E
CALIFORNIA ENERGY COMMISSION

CERTIFICATE OF COMPLIANCE			NRCC-MCH-E
Project Name:	The City of Gardena Senior Center and Aquatics	Report Page:	(Page 12 of 29)
Project Address:	1654 W 166th Street	Date Prepared:	5/5/2023

J. VENTILATION AND INDOOR AIR QUALITY

04	05			06		07
System Name	1F RTU 1-1 Senior Daycare	System Design OA CFM Airflow[1]	326	System Design Transfer Air CFM	0	Air Filtration per §120.1(c) and §141.0(b)2 [2] Provided per §120.1(c) (NR and Hotel/Motel))

08	09	10	11	12	13	14	15	16
Mechanical Ventilation Required per §120.1(c)3 [3]					Exh. Vent per §120.1(c)4			
Space Name ot item Tag	Occupancy Type[4]	Conditioned Floor Area (ft²)	# of Shower heads/ toilets	# of people[5]	Required Min OA CFM	Required Min CFM	Provided per Design CFM	DCV or Sensor Controls per §120.1(d)3, §120.1(d)5, and §120.1(e)3 [6]
Senior Daycare	All others	1856		21.735	377.6	0	0	DCV: Provided per §120.1(d)4
								Occ Sensor: NA: Not required space type
17	Total System Required Min OA CFM				378	18	Ventilation for this System Complies?	Yes

04	05			06		07
System Name	1F RTU 1-2 Lobby and Office	System Design OA CFM Airflow[1]	292	System Design Transfer Air CFM	0	Air Filtration per §120.1(c) and §141.0(b)2 [2] Provided per §120.1(c) (NR and Hotel/Motel))

08	09	10	11	12	13	14	15	16
Mechanical Ventilation Required per §120.1(c)3 [3]					Exh. Vent per §120.1(c)4			
Space Name ot item Tag	Occupancy Type[4]	Conditioned Floor Area (ft²)	# of Shower heads/ toilets	# of people[5]	Required Min OA CFM	Required Min CFM	Provided per Design CFM	DCV or Sensor Controls per §120.1(d)3, §120.1(d)5, and §120.1(e)3 [6]
Enclosed Offices	Office space	1451		19.495	216.7	0	0	DCV: NA: Not required per §120.1(d)3
								Occ Sensor: NA: Not required space type
17	Total System Required Min OA CFM				217	18	Ventilation for this System Complies?	Yes

Registration Number: | Registration Date/Time: | Registration Provider: Energysoft
CA Building Energy Efficiency Standards - 2019 Nonresidential Compliance | Report Version: 2019.1.003 Schema Version: rev 20200601 | Report Generated: 2023-05-05 13:12:59

STATE OF CALIFORNIA
Mechanical Systems
NRCC-MCH-E
CALIFORNIA ENERGY COMMISSION

CERTIFICATE OF COMPLIANCE			NRCC-MCH-E
Project Name:	The City of Gardena Senior Center and Aquatics	Report Page:	(Page 13 of 29)
Project Address:	1654 W 166th Street	Date Prepared:	5/5/2023

J. VENTILATION AND INDOOR AIR QUALITY

04	05			06		07
System Name	1F FC_CU-1-1 Inverter	System Design OA CFM Airflow[1]	25	System Design Transfer Air CFM	0	Air Filtration per §120.1(c) and §141.0(b)2 [2] Provided per §120.1(c) (NR and Hotel/Motel))

08	09	10	11	12	13	14	15	16
Mechanical Ventilation Required per §120.1(c)3 [3]					Exh. Vent per §120.1(c)4			
Space Name ot item Tag	Occupancy Type[4]	Conditioned Floor Area (ft²)	# of Shower heads/ toilets	# of people[5]	Required Min OA CFM	Required Min CFM	Provided per Design CFM	DCV or Sensor Controls per §120.1(d)3, §120.1(d)5, and §120.1(e)3 [6]
Inverter	All others	38			0	0	25	DCV: NA: Not required per §120.1(d)3
								Occ Sensor: NA: Not required space type
17	Total System Required Min OA CFM				0	18	Ventilation for this System Complies?	Yes

04	05			06		07
System Name	1F FC_CU-1-2 Elev Control	System Design OA CFM Airflow[1]	25	System Design Transfer Air CFM	0	Air Filtration per §120.1(c) and §141.0(b)2 [2] Provided per §120.1(c) (NR and Hotel/Motel))

08	09	10	11	12	13	14	15	16
Mechanical Ventilation Required per §120.1(c)3 [3]					Exh. Vent per §120.1(c)4			
Space Name ot item Tag	Occupancy Type[4]	Conditioned Floor Area (ft²)	# of Shower heads/ toilets	# of people[5]	Required Min OA CFM	Required Min CFM	Provided per Design CFM	DCV or Sensor Controls per §120.1(d)3, §120.1(d)5, and §120.1(e)3 [6]
Elev Machine Room 124	All others	60			0	0	25	DCV: NA: Not required per §120.1(d)3
								Occ Sensor: NA: Not required space type
17	Total System Required Min OA CFM				0	18	Ventilation for this System Complies?	Yes

Registration Number: | Registration Date/Time: | Registration Provider: Energysoft
CA Building Energy Efficiency Standards - 2019 Nonresidential Compliance | Report Version: 2019.1.003 Schema Version: rev 20200601 | Report Generated: 2023-05-05 13:12:59

STATE OF CALIFORNIA
Mechanical Systems
NRCC-MCH-E
CALIFORNIA ENERGY COMMISSION

CERTIFICATE OF COMPLIANCE			NRCC-MCH-E
Project Name:	The City of Gardena Senior Center and Aquatics	Report Page:	(Page 14 of 29)
Project Address:	1654 W 166th Street	Date Prepared:	5/5/2023

J. VENTILATION AND INDOOR AIR QUALITY

04	05			06		07
System Name	1F FC-CU 1-3 Life Guard	System Design OA CFM Airflow[1]	15	System Design Transfer Air CFM	0	Air Filtration per §120.1(c) and §141.0(b)2 [2] Provided per §120.1(c) (NR and Hotel/Motel))

08	09	10	11	12	13	14	15	16
Mechanical Ventilation Required per §120.1(c)3 [3]					Exh. Vent per §120.1(c)4			
Space Name ot item Tag	Occupancy Type[4]	Conditioned Floor Area (ft²)	# of Shower heads/ toilets	# of people[5]	Required Min OA CFM	Required Min CFM	Provided per Design CFM	DCV or Sensor Controls per §120.1(d)3, §120.1(d)5, and §120.1(e)3 [6]
Life Guard	Office space	202			30.3	0	0	DCV: NA: Not required per §120.1(d)3
								Occ Sensor: NA: Not required space type
17	Total System Required Min OA CFM				30	18	Ventilation for this System Complies?	Yes

04	05			06		07
System Name	2F RTU 2-4 Lounge and Circulation	System Design OA CFM Airflow[1]	221	System Design Transfer Air CFM	0	Air Filtration per §120.1(c) and §141.0(b)2 [2] Provided per §120.1(c) (NR and Hotel/Motel))

08	09	10	11	12	13	14	15	16
Mechanical Ventilation Required per §120.1(c)3 [3]					Exh. Vent per §120.1(c)4			
Space Name ot item Tag	Occupancy Type[4]	Conditioned Floor Area (ft²)	# of Shower heads/ toilets	# of people[5]	Required Min OA CFM	Required Min CFM	Provided per Design CFM	DCV or Sensor Controls per §120.1(d)3, §120.1(d)5, and §120.1(e)3 [6]
Lounge	Break room	1998		14.785037 5373375	497	0	0	DCV: Provided per §120.1(d)4
								Occ Sensor: NA: Not required space type
17	Total System Required Min OA CFM				497	18	Ventilation for this System Complies?	Yes

Registration Number: | Registration Date/Time: | Registration Provider: Energysoft
CA Building Energy Efficiency Standards - 2019 Nonresidential Compliance | Report Version: 2019.1.003 Schema Version: rev 20200601 | Report Generated: 2023-05-05 13:12:59

STATE OF CALIFORNIA
Mechanical Systems
NRCC-MCH-E
CALIFORNIA ENERGY COMMISSION

CERTIFICATE OF COMPLIANCE			NRCC-MCH-E
Project Name:	The City of Gardena Senior Center and Aquatics	Report Page:	(Page 15 of 29)
Project Address:	1654 W 166th Street	Date Prepared:	5/5/2023

J. VENTILATION AND INDOOR AIR QUALITY

04	05			06		07
System Name	2F RTU 2-1 Classroom	System Design OA CFM Airflow[1]	377	System Design Transfer Air CFM	0	Air Filtration per §120.1(c) and §141.0(b)2 [2] Provided per §120.1(c) (NR and Hotel/Motel))

08	09	10	11	12	13	14	15	16
Mechanical Ventilation Required per §120.1(c)3 [3]					Exh. Vent per §120.1(c)4			
Space Name ot item Tag	Occupancy Type[4]	Conditioned Floor Area (ft²)	# of Shower heads/ toilets	# of people[5]	Required Min OA CFM	Required Min CFM	Provided per Design CFM	DCV or Sensor Controls per §120.1(d)3, §120.1(d)5, and §120.1(e)3 [6]
Classroom	Lecture/ postsecondary classroom	703			267.1	0	0	DCV: NA: Not required per §120.1(d)3
								Occ Sensor: NA: Not required space type
17	Total System Required Min OA CFM				267	18	Ventilation for this System Complies?	Yes

04	05			06		07
System Name	2F RTU 2-2 Classroom	System Design OA CFM Airflow[1]	384	System Design Transfer Air CFM	0	Air Filtration per §120.1(c) and §141.0(b)2 [2] Provided per §120.1(c) (NR and Hotel/Motel))

08	09	10	11	12	13	14	15	16
Mechanical Ventilation Required per §120.1(c)3 [3]					Exh. Vent per §120.1(c)4			
Space Name ot item Tag	Occupancy Type[4]	Conditioned Floor Area (ft²)	# of Shower heads/ toilets	# of people[5]	Required Min OA CFM	Required Min CFM	Provided per Design CFM	DCV or Sensor Controls per §120.1(d)3, §120.1(d)5, and §120.1(e)3 [6]
Classroom	Lecture/ postsecondary classroom	716			272.1	0	0	DCV: NA: Not required per §120.1(d)3
								Occ Sensor: NA: Not required space type
17	Total System Required Min OA CFM				272	18	Ventilation for this System Complies?	Yes

Registration Number: | Registration Date/Time: | Registration Provider: Energysoft
CA Building Energy Efficiency Standards - 2019 Nonresidential Compliance | Report Version: 2019.1.003 Schema Version: rev 20200601 | Report Generated: 2023-05-05 13:12:59

STATE OF CALIFORNIA
Mechanical Systems
NRCC-MCH-E
CALIFORNIA ENERGY COMMISSION

CERTIFICATE OF COMPLIANCE			NRCC-MCH-E
Project Name:	The City of Gardena Senior Center and Aquatics	Report Page:	(Page 16 of 29)
Project Address:	1654 W 166th Street	Date Prepared:	5/5/2023

J. VENTILATION AND INDOOR AIR QUALITY

04	05			06		07
System Name	2F RTU 2-3 Classroom	System Design OA CFM Airflow[1]	368	System Design Transfer Air CFM	0	Air Filtration per §120.1(c) and §141.0(b)2 [2] Provided per §120.1(c) (NR and Hotel/Motel))

08	09	10	11	12	13	14	15	16
Mechanical Ventilation Required per §120.1(c)3 [3]					Exh. Vent per §120.1(c)4			
Space Name ot item Tag	Occupancy Type[4]	Conditioned Floor Area (ft²)	# of Shower heads/ toilets	# of people[5]	Required Min OA CFM	Required Min CFM	Provided per Design CFM	DCV or Sensor Controls per §120.1(d)3, §120.1(d)5, and §120.1(e)3 [6]
Classroom	Lecture/ postsecondary classroom	686			260.7	0	0	DCV: NA: Not required per §120.1(d)3
								Occ Sensor: NA: Not required space type
17	Total System Required Min OA CFM				261	18	Ventilation for this System Complies?	Yes

04	05			06		07
System Name	2F RTU 2-5 Classroom	System Design OA CFM Airflow[1]	378	System Design Transfer Air CFM	0	Air Filtration per §120.1(c) and §141.0(b)2 [2] Provided per §120.1(c) (NR and Hotel/Motel))

08	09	10	11	12	13	14	15	16
Mechanical Ventilation Required per §120.1(c)3 [3]					Exh. Vent per §120.1(c)4			
Space Name ot item Tag	Occupancy Type[4]	Conditioned Floor Area (ft²)	# of Shower heads/ toilets	# of people[5]	Required Min OA CFM	Required Min CFM	Provided per Design CFM	DCV or Sensor Controls per §120.1(d)3, §120.1(d)5, and §120.1(e)3 [6]
Classroom	Lecture/ postsecondary classroom	705			267.9	0	0	DCV: NA: Not required per §120.1(d)3
								Occ Sensor: NA: Not required space type
17	Total System Required Min OA CFM				268	18	Ventilation for this System Complies?	Yes

Registration Number: | Registration Date/Time: | Registration Provider: Energysoft
CA Building Energy Efficiency Standards - 2019 Nonresidential Compliance | Report Version: 2019.1.003 Schema Version: rev 20200601 | Report Generated: 2023-05-05 13:12:59

STATE OF CALIFORNIA
Mechanical Systems
NRCC-MCH-E
CALIFORNIA ENERGY COMMISSION

CERTIFICATE OF COMPLIANCE			NRCC-MCH-E
Project Name:	The City of Gardena Senior Center and Aquatics	Report Page:	(Page 17 of 29)
Project Address:	1654 W 166th Street	Date Prepared:	5/5/2023

J. VENTILATION AND INDOOR AIR QUALITY

04	05			06		07
System Name	1F MAU 1-1 Restroom and Shower	System Design OA CFM Airflow[1]	2350	System Design Transfer Air CFM	0	Air Filtration per §120.1(c) and §141.0(b)2 [2] Provided per §120.1(c) (NR and Hotel/Motel))

08	09	10	11	12	13	14	15	16
Mechanical Ventilation Required per §120.1(c)3 [3]					Exh. Vent per §120.1(c)4			
Space Name ot item Tag	Occupancy Type[4]	Conditioned Floor Area (ft²)	# of Shower heads/ toilets	# of people[5]	Required Min OA CFM	Required Min CFM	Provided per Design CFM	DCV or Sensor Controls per §120.1(d)3, §120.1(d)5, and §120.1(e)3 [6]
Restrooms	Kitchenettes	934			0	280.2	2350	DCV: NA: Not required per §120.1(d)3
								Occ Sensor: NA: Not required space type
17	Total System Required Min OA CFM				0	18	Ventilation for this System Complies?	Yes

[1] *FOOTNOTES: System CFM should include both mechanical and natural ventilation for the zone/system*

[2] *Air filtration requirements apply to the following three system types per §120.1(c)14 : space conditioning systems utilizing ducts to supply air to occupiable space; supply-only ventilation systems providing outside air to occupiable space; supply side of balanced ventilation systems including heat recovery and energy recovery ventilation systems providing outside air to occupiable space.*

[3] *Uniform Mechanical Code may have more stringent ventilation requirements; the most stringent code requirement takes precedence.*

[4] *See Standards Tables 120.1-A and 120.1-B.*

[5] *For lecture halls with fixed seating, the expected number of occupants shall be shall be determined in accordance with the California Building Code.*

[6] *§120.2(e)3 requires systems serving rooms that are required by §130.1(c) to have lighting occupancy sensing controls to also have occupancy sensing zone controls for ventilation. Examples of spaces which require lighting occupancy sensors include offices 250ft² or smaller, multipurpose rooms less than 1,000 ft², classrooms, conference rooms, restrooms, aisles and open areas in warehouses, library book stack aisles, corridors, stairwells, parking garages, and loading and unloading zones, unless excepted by §130.1(c).*

K. TERMINAL BOX CONTROLS

This section does not apply to this project.

Registration Number: | Registration Date/Time: | Registration Provider: Energysoft
CA Building Energy Efficiency Standards - 2019 Nonresidential Compliance | Report Version: 2019.1.003 Schema Version: rev 20200601 | Report Generated: 2023-05-05 13:12:59

STATE OF CALIFORNIA
Mechanical Systems
NRCC-MCH-E
CALIFORNIA ENERGY COMMISSION

CERTIFICATE OF COMPLIANCE			NRCC-MCH-E
Project Name:	The City of Gardena Senior Center and Aquatics	Report Page:	(Page 18 of 29)
Project Address:	1654 W 166th Street	Date Prepared:	5/5/2023

L. DISTRIBUTION (DUCTWORK and PIPING)

This table is used to show compliance with mandatory pipe insulation requirements found in §120.3 and prescriptive requirements found in §140.4(l) for duct leakage testing.

Duct Leakage Sealing

The answers to the questions below apply to the following duct systems: 1F RTU 1-1 Senior Daycare | Duct leakage testing triggered for these systems? | No

11	No	The scope of the project includes only duct systems serving healthcare facilities
12	Yes	Duct system provides conditioned air to an occupiable space for a constant volume, single zone, space-conditioning system.
13	Yes	The space conditioning system serves less than 5,000 ft² of conditioned floor area.
14	No	The combined surface area of the ducts in the following locations is more than 25% of the total surface area of the entire duct system:
	☐	Outdoors
	☐	In a space directly under a roof that has a U-factor greater than the u-factor of the ceiling, or if the roof does not meet the requirements of §140.3(a)1B or if the roof has fixed vents or openings to the outside/ unconditioned spaces
	☐	In an unconditioned crawl space
	☐	In other unconditioned spaces
15		The scope of the project includes extending an existing duct system, which is constructed, insulated or sealed with asbestos.
16		The scope of the project includes an existing duct system that is documented to have been previously sealed as confirmed through field verification and diagnostic testing in accordance with procedures in the Reference Nonresidential Appendix NA2.
17	Yes	Duct system shall be sealed in accordance with the California Mechanical Code

The answers to the questions below apply to the following duct systems: 2F RTU 2-3 Classroom | Duct leakage testing triggered for these systems? | No

11	No	The scope of the project includes only duct systems serving healthcare facilities
12	Yes	Duct system provides conditioned air to an occupiable space for a constant volume, single zone, space-conditioning system.
13	Yes	The space conditioning system serves less than 5,000 ft² of conditioned floor area.
14	No	The combined surface area of the ducts in the following locations is more than 25% of the total surface area of the entire duct system:
	☐	Outdoors
	☐	In a space directly under a roof that has a U-factor greater than the u-factor of the ceiling, or if the roof does not meet the requirements of §140.3(a)1B or if the roof has fixed vents or openings to the outside/ unconditioned spaces
	☐	In an unconditioned crawl space
	☐	In other unconditioned spaces
15		The scope of the project includes extending an existing duct system, which is constructed, insulated or sealed with asbestos.
16		The scope of the project includes an existing duct system that is documented to have been previously sealed as confirmed through field verification and diagnostic testing in accordance with procedures in the Reference Nonresidential Appendix NA2.
17	Yes	Duct system shall be sealed in accordance with the California Mechanical Code

The answers to the questions below apply to the following duct systems: 1F MAU 1-1 Restroom and Shower | Duct leakage testing triggered for these systems? | No

11	No	The scope of the project includes only duct systems serving healthcare facilities
12	Yes	Duct system provides conditioned air to an occupiable space for a constant volume, single zone, space-conditioning system.
13	Yes	The space conditioning system serves less than 5,000 ft² of conditioned floor area.
14	No	The combined surface area of the ducts in the following locations is more than 25% of the total surface area of the entire duct system:
	☐	Outdoors
	☐	In a space directly under a roof that has a U-factor greater than the u-factor of the ceiling, or if the roof does not meet the requirements of §140.3(a)1B or if the roof has fixed vents or openings to the outside/ unconditioned spaces
	☐	In an unconditioned crawl space

Registration Number: | Registration Date/Time: | Registration Provider: Energysoft
CA Building Energy Efficiency Standards - 2019 Nonresidential Compliance | Report Version: 2019.1.003 Schema Version: rev 20200601 | Report Generated: 2023-05-05 13:12:59

STATE OF CALIFORNIA
Mechanical Systems
NRCC-MCH-E
CALIFORNIA ENERGY COMMISSION

CERTIFICATE OF COMPLIANCE			NRCC-MCH-E
Project Name:	The City of Gardena Senior Center and Aquatics	Report Page:	(Page 19 of 29)
Project Address:	1654 W 166th Street	Date Prepared:	5/5/2023

L. DISTRIBUTION (DUCTWORK and PIPING)

		☐	In other unconditioned spaces
15			The scope of the project includes extending an existing duct system, which is constructed, insulated or sealed with asbestos.
16			The scope of the project includes an existing duct system that is documented to have been previously sealed as confirmed through field verification and diagnostic testing in accordance with procedures in the Reference Nonresidential Appendix NA2.
17	Yes		Duct system shall be sealed in accordance with the California Mechanical Code

The answers to the questions below apply to the following duct systems: 1F FC_CU-1-1 Inverter | Duct leakage testing triggered for these systems? | No

11	No		The scope of the project includes only duct systems serving healthcare facilities
12	Yes		Duct system provides conditioned air to an occupiable space for a constant volume, single zone, space-conditioning system.
13	Yes		The space conditioning system serves less than 5,000 ft² of conditioned floor area.
14	No		The combined surface area of the ducts in the following locations is more than 25% of the total surface area of the entire duct system:
		☐	Outdoors
		☐	In a space directly under a roof that has a U-factor greater than the u-factor of the ceiling, or if the roof does not meet the requirements of §140.3(a)1B or if the roof has fixed vents or openings to the outside/ unconditioned spaces
		☐	In an unconditioned crawl space
		☐	In other unconditioned spaces
15			The scope of the project includes extending an existing duct system, which is constructed, insulated or sealed with asbestos.
16			The scope of the project includes an existing duct system that is documented to have been previously sealed as confirmed through field verification and diagnostic testing in accordance with procedures in the Reference Nonresidential Appendix NA2.
17	Yes		Duct system shall be sealed in accordance with the California Mechanical Code

The answers to the questions below apply to the following duct systems: 2F RTU 2-3 Classroom | Duct leakage testing triggered for these systems? | No

11	No		The scope of the project includes only duct systems serving healthcare facilities
12	Yes		Duct system provides conditioned air to an occupiable space for a constant volume, single zone, space-conditioning system.
13	Yes		The space conditioning system serves less than 5,000 ft² of conditioned floor area.
14	No		The combined surface area of the ducts in the following locations is more than 25% of the total surface area of the entire duct system:
		☐	Outdoors
		☐	In a space directly under a roof that has a U-factor greater than the u-factor of the ceiling, or if the roof does not meet the requirements of §140.3(a)1B or if the roof has fixed vents or openings to the outside/ unconditioned spaces
		☐	In an unconditioned crawl space

Registration Number: | Registration Date/Time: | Registration Provider: Energysoft
CA Building Energy Efficiency Standards - 2019 Nonresidential Compliance | Report Version: 2019.1.003 Schema Version: rev 20200601 | Report Generated: 2023-05-05 13:12:59

STATE OF CALIFORNIA
Mechanical Systems
NRCC-MCH-E
CALIFORNIA ENERGY COMMISSION

CERTIFICATE OF COMPLIANCE			NRCC-MCH-E
Project Name:	The City of Gardena Senior Center and Aquatics	Report Page:	(Page 20 of 29)
Project Address:	1654 W 166th Street	Date Prepared:	5/5/2023

L. DISTRIBUTION (DUCTWORK and PIPING)

		☐	In other unconditioned spaces
15			The scope of the project includes extending an existing duct system, which is constructed, insulated or sealed with asbestos.
16			The scope of the project includes an existing duct system that is documented to have been previously sealed as confirmed through field verification and diagnostic testing in accordance with procedures in the Reference Nonresidential Appendix NA2.
17	Yes		Duct system shall be sealed in accordance with the California Mechanical Code

The answers to the questions below apply to the following duct systems: 2F RTU 2-4 Lounge and Circulation | Duct leakage testing triggered for these systems? | No

11	No		The scope of the project includes only duct systems serving healthcare facilities
12	Yes		Duct system provides conditioned air to an occupiable space for a constant volume, single zone, space-conditioning system.
13	Yes		The space conditioning system serves less than 5,000 ft² of conditioned floor area.
14	No		The combined surface area of the ducts in the following locations is more than 25% of the total surface area of the entire duct system:
		☐	Outdoors
		☐	In a space directly under a roof that has a U-factor greater than the u-factor of the ceiling, or if the roof does not meet the requirements of §140.3(a)1B or if the roof has fixed vents or openings to the outside/ unconditioned spaces
		☐	In an unconditioned crawl space
		☐	In other unconditioned spaces
15			The scope of the project includes extending an existing duct system, which is constructed, insulated or sealed with asbestos.
16			The scope of the project includes an existing duct system that is documented to have been previously sealed as confirmed through field verification and diagnostic testing in accordance with procedures in the Reference Nonresidential Appendix NA2.
17	Yes		Duct system shall be sealed in accordance with the California Mechanical Code

The answers to the questions below apply to the following duct systems: 2F RTU 2-1 Classroom | Duct leakage testing triggered for these systems? | No

11	No		The scope of the project includes only duct systems serving healthcare facilities
12	Yes		Duct system provides conditioned air to an occupiable space for a constant volume, single zone, space-conditioning system.
13	Yes		The space conditioning system serves less than 5,000 ft² of conditioned floor area.
14	No		The combined surface area of the ducts in the following locations is more than 25% of the total surface area of the entire duct system:
		☐	Outdoors
		☐	In a space directly under a roof that has a U-factor greater than the u-factor of the ceiling, or if the roof does not meet the requirements of §140.3(a)1B or if the roof has fixed vents or openings to the outside/ unconditioned spaces
		☐	In an unconditioned crawl space

Registration Number: | Registration Date/Time: | Registration Provider: Energysoft
CA Building Energy Efficiency Standards - 2019 Nonresidential Compliance | Report Version: 2019.1.003 Schema Version: rev 20200601 | Report Generated: 2023-05-05 13:12:59

STATE OF CALIFORNIA
Mechanical Systems
NRCC-MCH-E
CALIFORNIA ENERGY COMMISSION

CERTIFICATE OF COMPLIANCE			NRCC-MCH-E
Project Name:	The City of Gardena Senior Center and Aquatics	Report Page:	(Page 21 of 29)
Project Address:	1654 W 166th Street	Date Prepared:	5/5/2023

L. DISTRIBUTION (DUCTWORK and PIPING)

		☐	In other unconditioned spaces
15			The scope of the project includes extending an existing duct system, which is constructed, insulated or sealed with asbestos.
16			The scope of the project includes an existing duct system that is documented to have been previously sealed as confirmed through field verification and diagnostic testing in accordance with procedures in the Reference Nonresidential Appendix NA2.
17	Yes		Duct system shall be sealed in accordance with the California Mechanical Code

The answers to the questions below apply to the following duct systems: 2F RTU 2-5 Classroom | Duct leakage testing triggered for these systems? | No

11	No		The scope of the project includes only duct systems serving healthcare facilities
12	Yes		Duct system provides conditioned air to an occupiable space for a constant volume, single zone, space-conditioning system.
13	Yes		The space conditioning system serves less than 5,000 ft² of conditioned floor area.
14	No		The combined surface area of the ducts in the following locations is more than 25% of the total surface area of the entire duct system:
		☐	Outdoors
		☐	In a space directly under a roof that has a U-factor greater than the u-factor of the ceiling, or if the roof does not meet the requirements of §140.3(a)1B or if the roof has fixed vents or openings to the outside/ unconditioned spaces
		☐	In an unconditioned crawl space
		☐	In other unconditioned spaces
15			The scope of the project includes extending an existing duct system, which is constructed, insulated or sealed with asbestos.
16			The scope of the project includes an existing duct system that is documented to have been previously sealed as confirmed through field verification and diagnostic testing in accordance with procedures in the Reference Nonresidential Appendix NA2.
17	Yes		Duct system shall be sealed in accordance with the California Mechanical Code

The answers to the questions below apply to the following duct systems: 1F MAU 1-1 Restroom and Shower | Duct leakage testing triggered for these systems? | No

11	No		The scope of the project includes only duct systems serving healthcare facilities
12	Yes		Duct system provides conditioned air to an occupiable space for a constant volume, single zone, space-conditioning system.
13	Yes		The space conditioning system serves less than 5,000 ft² of conditioned floor area.
14	No		The combined surface area of the ducts in the following locations is more than 25% of the total surface area of the entire duct system:
		☐	Outdoors
		☐	In a space directly under a roof that has a U-factor greater than the u-factor of the ceiling, or if the roof does not meet the requirements of §140.3(a)1B or if the roof has fixed vents or openings to the outside/ unconditioned spaces
		☐	In an unconditioned crawl space

Registration Number: | Registration Date/Time: | Registration Provider: Energysoft
CA Building Energy Efficiency Standards - 2019 Nonresidential Compliance | Report Version: 2019.1.003 Schema Version: rev 20200601 | Report Generated: 2023-05-05 13:12:59

STATE OF CALIFORNIA
Mechanical Systems
NRCC-MCH-E
CALIFORNIA ENERGY COMMISSION

CERTIFICATE OF COMPLIANCE			NRCC-MCH-E
Project Name:	The City of Gardena Senior Center and Aquatics	Report Page:	(Page 22 of 29)
Project Address:	1654 W 166th Street	Date Prepared:	5/5/2023

L. DISTRIBUTION (DUCTWORK and PIPING)

		☐	In other unconditioned spaces
15			The scope of the project includes extending an existing duct system, which is constructed, insulated or sealed with asbestos.
16			The scope of the project includes an existing duct system that is documented to have been previously sealed as confirmed through field verification and diagnostic testing in accordance with procedures in the Reference Nonresidential Appendix NA2.
17	Yes		Duct system shall be sealed in accordance with the California Mechanical Code

The answers to the questions below apply to the following duct systems: 2F RTU 2-3 Classroom | Duct leakage testing triggered for these systems? | No

11	No		The scope of the project includes only duct systems serving healthcare facilities
12	Yes		Duct system provides conditioned air to an occupiable space for a constant volume, single zone, space-conditioning system.
13	Yes		The space conditioning system serves less than 5,000 ft² of conditioned floor area.
14	No		The combined surface area of the ducts in the following locations is more than 25% of the total surface area of the entire duct system:
		☐	Outdoors
		☐	In a space directly under a roof that has a U-factor greater than the u-factor of the ceiling, or if the roof does not meet the requirements of §140.3(a)1B or if the roof has fixed vents or openings to the outside/ unconditioned spaces
		☐	In an unconditioned crawl space

Registration Number: | Registration Date/Time: | Registration Provider: Energysoft
CA Building Energy Efficiency Standards - 2019 Nonresidential Compliance | Report Version: 2019.1.003 Schema Version: rev 20200601 | Report Generated: 2023-05-05 13:12:59

STATE OF CALIFORNIA
Mechanical Systems
NRCC-MCH-E
CALIFORNIA ENERGY COMMISSION

CERTIFICATE OF COMPLIANCE			NRCC-MCH-E
Project Name:	The City of Gardena Senior Center and Aquatics	Report Page:	(Page 23 of 29)
Project Address:	1654 W 166th Street	Date Prepared:	5/5/2023

L. DISTRIBUTION (DUCTWORK and PIPING)

		☐	In other unconditioned spaces
15			The scope of the project includes extending an existing duct system, which is constructed, insulated or sealed with asbestos.
16			The scope of the project includes an existing duct system that is documented to have been previously sealed as confirmed through field verification and diagnostic testing in accordance with procedures in the Reference Nonresidential Appendix NA2.
17	Yes		Duct system shall be sealed in accordance with the California Mechanical Code

M. COOLING TOWERS

This section does not apply to this project.

N. DECLARATION OF REQUIRED CERTIFICATES OF INSTALLATION

Selections have been made based on information provided in previous tables of this document. If any selection needs to be changed, please explain why in Table E Additional Remarks. These documents must be provided to the building inspector during construction and can be found online at https://www.energy.ca.gov/title24/2019standards/2019_compliance_documents/Nonresidential_Documents/NRCI/

Form/Title	Field Inspector Pass	Field Inspector Fail
NRCI-MCH-01-E - Must be submitted for all buildings	☐	☐

Registration Number: | Registration Date/Time: | Registration Provider: Energysoft
CA Building Energy Efficiency Standards - 2019 Nonresidential Compliance | Report Version: 2019.1.003 Schema Version: rev 20200601 | Report Generated: 2023-05-05 13:12:59

STATE OF CALIFORNIA
Mechanical Systems
NRCC-MCH-E
CALIFORNIA ENERGY COMMISSION

CERTIFICATE OF COMPLIANCE			NRCC-MCH-E
Project

STATE OF CALIFORNIA
Mechanical Systems
NRCC-MCH-E
CALIFORNIA ENERGY COMMISSION

CERTIFICATE OF COMPLIANCE			NRCC-MCH-E
Project Name:	The City of Gardena Senior Center and Aquatics	Report Page:	(Page 28 of 29)
Project Address:	1654 W 166th Street	Date Prepared:	5/5/2023

P. DECLARATION OF REQUIRED CERTIFICATES OF VERIFICATION

There are no NRCV forms required for this project.

Q. MANDATORY MEASURES DOCUMENTATION LOCATION

This table is used to indicate where mandatory measures are documented in the plan set or construction documentation.

01	02
Compliance with Mandatory Measures documented through MCH Mandatory Measures Note Block	Yes — M-Sheets

STATE OF CALIFORNIA
Mechanical Systems
NRCC-MCH-E
CALIFORNIA ENERGY COMMISSION

CERTIFICATE OF COMPLIANCE			NRCC-MCH-E
Project Name:	The City of Gardena Senior Center and Aquatics	Report Page:	(Page 29 of 29)
Project Address:	1654 W 166th Street	Date Prepared:	5/5/2023

DOCUMENTATION AUTHOR'S DECLARATION STATEMENT

I certify that this Certificate of Compliance documentation is accurate and complete.

Documentation Author Name:	Documentation Author Signature:
Nikolaos J. Kourassis	NJKourassis
Company: Alfa Tech	Signature Date: 2023-05-05
Address: 421 E. Huntington Dr.	CEA/ HERS Certification Identification (if applicable): M31713
City/State/Zip: Monrovia CA 91016	Phone: (213) 212-9860

RESPONSIBLE PERSON'S DECLARATION STATEMENT

I certify the following under penalty of perjury, under the laws of the State of California:

1. The information provided on this Certificate of Compliance is true and correct.
2. I am eligible under Division 3 of the Business and Professions Code to accept responsibility for the building design or system design identified on this Certificate of Compliance (responsible designer)
3. The energy features and performance specifications, materials, components, and manufactured devices for the building design or system design identified on this Certificate of Compliance conform to the requirements of Title 24, Part 1 and Part 6 of the California Code of Regulations.
4. The building design features or system design features identified on this Certificate of Compliance are consistent with the information provided on other applicable compliance documents, worksheets, calculations, plans and specifications submitted to the enforcement agency for approval with this building permit application.
5. I will ensure that a completed signed copy of this Certificate of Compliance shall be made available with the building permit(s) issued for the building, and made available to the enforcement agency for all applicable inspections. I understand that a completed signed copy of this Certificate of Compliance is required to be included with the documentation the builder provides to the building owner at occupancy.

Responsible Designer Name:	Responsible Designer Signature:
Nikolaos J. Kourassis	NJKourassis
Company: AlfaTech	Date Signed: 2023-05-05
Address: 421 E. Huntington Drive	License: M31713
City/State/Zip: Monrovia CA 91016	Phone: (213) 212-9860

STATE OF CALIFORNIA
Domestic Water Heating System
NRCC-PLB-E
CALIFORNIA ENERGY COMMISSION

CERTIFICATE OF COMPLIANCE			NRCC-PLB-E
Project Name:	The City of Gardena Senior Center and Aquatics	Report Page:	(Page 1 of 6)
Project Address:	1654 W 166th Street	Date Prepared:	5/5/2023

This document is used to demonstrate compliance for nonresidential occupancies with requirements in §120.1, §110.3, §120.8, and §140.5, and with requirements in §141.0 for additions and alterations, for domestic water heating scopes using the prescriptive path. For high-rise residential and hotel/motel occupancies compliance is demonstrated with requirements in §160.1, §110.3, §120.5, §150.0 and §150.1(c)8, and with requirements §150.2 for additions.

A. GENERAL INFORMATION

01 Project Location (city)	Gardena	02 Climate Zone	8

03 Occupancy Types Within Project (select all that apply):

☒ Nonresidential	☐ High-Rise Residential	☐ Hotel/Motel
☐ State Building	☐ Healthcare Facility	☐ Other (Write In)

B. PROJECT SCOPE

This table includes domestic water heating systems that are within the scope of the permit application and are demonstrating compliance using the prescriptive paths outlined in §140.5 §150.1(c)8, and §141.0(b)1 or §141.0(b)2N for additions or alterations. Solar water heating systems are documented on the NRCC-SRA compliance document. Combined hydronic water heating systems are documented on the NRCC-MCH compliance document.

01	02	03	
My project consists of (check all that apply):	System Type[1,2]	System Components	
☒ New system (DHW system being installed for the first time in newly constructed building)	Individual System (serving nonresidential spaces)	☒ Equipment	☒ Distribution ☒ Controls
☐ System Alteration (equipment, distribution or controls)		☐ Equipment	☐ Distribution ☐ Controls

[1]FOOTNOTES: Point of use water heaters, or other non-central systems used to serve nonresidential spaces, are considered individual systems.

[2] Dwelling units refers to hotel/motel guest rooms and units in a high-rise residential occupancy.

STATE OF CALIFORNIA
Domestic Water Heating System
NRCC-PLB-E
CALIFORNIA ENERGY COMMISSION

CERTIFICATE OF COMPLIANCE			NRCC-PLB-E
Project Name:	The City of Gardena Senior Center and Aquatics	Report Page:	(Page 2 of 6)
Project Address:	1654 W 166th Street	Date Prepared:	5/5/2023

C. COMPLIANCE RESULTS

Table C will indicate if the project data input into the compliance document is compliant with water heating requirements. If this table says "DOES NOT COMPLY" or "COMPLIES with Exceptional Conditions" refer to Table D, or the table indicated as not compliant for guidance.

01	02	03	04
Domestic Hot Water Equipment	Distribution Systems	Controls	**Compliance Results**
Table F	Table G	Table H	
Yes	Yes	Yes	COMPLIES

D. EXCEPTIONAL CONDITIONS

This table is auto filled with unedittable comments because of selections made or data entered in tables throughout the form.

E. ADDITIONAL REMARKS

This table is includes remarks made by the permit applicant to the Authority Having Jurisdiction.

STATE OF CALIFORNIA
Domestic Water Heating System
NRCC-PLB-E
CALIFORNIA ENERGY COMMISSION

CERTIFICATE OF COMPLIANCE			NRCC-PLB-E
Project Name:	The City of Gardena Senior Center and Aquatics	Report Page:	(Page 3 of 6)
Project Address:	1654 W 166th Street	Date Prepared:	5/5/2023

F. DOMESTIC HOT WATER EQUIPMENT

This table is used to demonstrate compliance with mandatory equipment requirements in §110.1 and §110.3. For high-rise residential and hotel/motel occupancies, compliance with prescriptive requirements in §120.1(c)8 must also be demonstrated and with §160.2 for addition and alteration scopes.

Equipment Schedule: Individual Systems

01	02	03	04	05	06
Name or Item Tag	Equipment Type	Volume (gal)	Max GPM/ First Hour Rating (FHR)	Rated Uniform Energy Factor (UEF)	Minimum Required Uniform Energy Factor (UEF)[1]
A. O. SMITH BTHL 199A 300	Residential-Duty Commercial Gas-Fired Storage (75,000-105,000 BTUH)	>75	0 << GPM <1.7	0.6	0.04

[1]FOOTNOTE: Compliant equipment may be found in the Modernized Appliance Efficiency Database System (MAEDBS) on the Energy Commission website: https://cacertappliances.energy.ca.gov/Pages/Search/AdvancedSearch.aspx

Water Heating Equipment All Occupancies

	Yes	No	Not Applicable	Requirement
18	☐	☐	☒	Unfired storage tank insulation shall have Internal + External >=R-16 OR External >=R-12. Label required per §110.3(c)3
19	☐	☐	☒	New state buildings 60% of energy for service water heating from site solar energy or recovered energy per §110.3(c)5
20	☐	☐	☒	Isolation valves for instantaneous water heater with input rating >6.8 kBTUH or 2 kW has been specified per §110.3(c)6

STATE OF CALIFORNIA
Domestic Water Heating System
NRCC-PLB-E
CALIFORNIA ENERGY COMMISSION

CERTIFICATE OF COMPLIANCE			NRCC-PLB-E
Project Name:	The City of Gardena Senior Center and Aquatics	Report Page:	(Page 4 of 6)
Project Address:	1654 W 166th Street	Date Prepared:	5/5/2023

G. DOMESTIC HOT WATER DISTRIBUTION SYSTEM

This table is used to demonstrate compliance for nonresidential occupancies with distribution requirements in §120.3 and §140.5. For high-rise residential and hotel/motel occupancies, compliance is demonstrated with requirements §160.2(c), §120.3, §120.5, §160.1

Mandatory Pipe Insulation All Occupancies

12	☒	For systems serving nonresidential spaces, pipe insulation for the following applications is specified to comply with Table 120.3-A (see below) per §120.3 : • Recirculating system piping, including supply and return piping of the water heater • The first 8 ft of hot and cold outlet piping, including between storage tank and heat trap, for a nonrecirculating storage system • Pipes that are externally heated
13	☒	Insulation shall be protected from damage, including that due to sunlight, moisture, equipment maintenance, and wind. Insulation exposed to weather shall be installed with a cover suitable for outdoor service per §120.3(b) and §150.0(i)3

TABLE 120.3-A PIPE INSULATION THICKNESS

Fluid Temperature Range (°F)	Conductivity Range (Btu-in per hour per ft² per °F)	Insulation Mean Rating Temp (°F)	Nominal Pipe Diameter (in)		
			< 1	1 to < 1.5	1.5 to < 4
			Minimum Insulation Required		
105-140	0.22 - 0.28	100	1.0 in or R-7.7	1.5 in or R-12.5	1.5 in or R-11

STATE OF CALIFORNIA
Domestic Water Heating System
NRCC-PLB-E
CALIFORNIA ENERGY COMMISSION

CERTIFICATE OF COMPLIANCE			NRCC-PLB-E
Project Name:	The City of Gardena Senior Center and Aquatics	Report Page:	(Page 5 of 6)
Project Address:	1654 W 166th Street	Date Prepared:	5/5/2023

H. DOMESTIC HOT WATER CONTROLS

This table is used to demonstrate compliance with control requirements in §110.3 for all occupancies. For high-rise residential and hotel/motel occupancies, compliance is also demonstrated with requirements in §160.1(c)8

	Yes	No	Not Applicable	Requirement
01	☒	☐	☐	Construction documents require manufacturer certification that service water-heating systems are equipped with automatic temperature controls capable of adjusting temperature settings per §110.3(a).
02	☒	☐	☐	Systems with capacity > 167,000 BTUH equipped with outlet temperature controls per §110.3(c)1 unless covered by California Plumbing Code §13.0.
03	☐	☐	☒	Controls for circulating pumps or electrical heat trace systems are capable of automatically turning off the system per §110.3(c)2 unless systems serves healthcare facility.
04	☐	☐	☒	For recirculation systems serving multiple dwelling units, design includes automatic pump controls per §150.1(c)8Bii, or §150.2 for additions or alterations.
05	☐	☐	☒	For recirculation systems serving individual dwelling units; design includes manual on/off controls as specified in Reference Appendix RA4.4.9 per §150.1(c)8.
06	☐	☐	☒	For replacement single heat pump water heaters serving individual dwelling units in climate zone 1-15, design includes communication interface that meets demand responsive control requirements of §110.12(a) per §150.2(b)1Hii.

I. DECLARATION OF REQUIRED CERTIFICATES OF INSTALLATION

Selections have been made based on Information provided in this document. If any selection have been changed by permit applicant, an explanation should be included in Table E. Additional Remarks. These documents must be provided to the building inspector during construction and can be found online at https://www.energy.ca.gov/title24/2019standards/2019_compliance_documents/Nonresidential_Documents/NRCV

Form/Title	Field Inspector	
	Pass	Fail
NRCI-PLB-01-E - Must be submitted for all buildings	☐	☐

J.DECLARATION OF REQUIRED CERTIFICATES OF ACCEPTANCE

There are no Certificates of Acceptance applicable to service water heating requirements.

K. DECLARATION OF REQUIRED CERTIFICATES OF VERIFICATION

There are no NRCV forms required for this project.

STATE OF CALIFORNIA
Domestic Water Heating System
NRCC-PLB-E
CALIFORNIA ENERGY COMMISSION

CERTIFICATE OF COMPLIANCE			NRCC-PLB-E
Project Name:	The City of Gardena Senior Center and Aquatics	Report Page:	(Page 6 of 6)
Project Address:	1654 W 166th Street	Date Prepared:	5/5/2023

DOCUMENTATION AUTHOR'S DECLARATION STATEMENT

I certify that this Certificate of Compliance documentation is accurate and complete.

Documentation Author Name:	Documentation Author Signature:
Nikolaos J. Kourassis	NJKourassis
Company: Alfa Tech	Signature Date: 2023-05-05
Address: 421 E. Huntington Dr.	CEA/ HERS Certification Identification (if applicable): M31713
City/State/Zip: Monrovia CA 91016	Phone: (213) 212-9860

RESPONSIBLE PERSON'S DECLARATION STATEMENT

I certify the following under penalty of perjury, under the laws of the State of California:

1. The information provided on this Certificate of Compliance is true and correct.
2. I am eligible under Division 3 of the Business and Professions Code to accept responsibility for the building design or system design identified on this Certificate of Compliance (responsible designer)
3. The energy features and performance specifications, materials, components, and manufactured devices for the building design or system design identified on this Certificate of Compliance conform to the requirements of Title 24, Part 1 and Part 6 of the California Code of Regulations.
4. The building design features or system design features identified on this Certificate of Compliance are consistent with the information provided on other applicable compliance documents, worksheets, calculations, plans and specifications submitted to the enforcement agency for approval with this building permit application.
5. I will ensure that a completed signed copy of this Certificate of Compliance shall be made available with the building permit(s) issued for the building, and made available to the enforcement agency for all applicable inspections. I understand that a completed signed copy of this Certificate of Compliance is required to be included with the documentation the builder provides to the building owner at occupancy.

Responsible Designer Name:	Responsible Designer Signature:
Nikolaos J. Kourassis	NJKourassis
Company: AlfaTech	Date Signed: 2023-05-05
Address: 421 E. Huntington Drive	License: M31713
City/State/Zip: Monrovia CA 91016	Phone: (213) 212-9860

ALFATECH
421 EAST HUNTINGTON DRIVE
MONROVIA, CA 91016
PHONE: (213) 212-9860
www.atce.com

PREPARED BY:

SVA ARCHITECTS
6 HUTTON CENTRE DR. SUITE 1150
SANTA ANA, CA 92707
T 949.809.3380 WWW.SVA-ARCHITECTS.COM

THIS DOCUMENT CONTAINS INFORMATION PROPRIETARY TO SVA ARCHITECTS INC. AND IS FURNISHED IN CONFIDENCE FOR THE LIMITED PURPOSE OF EVALUATION, BIDDING OR REVIEW. THIS DOCUMENT OR ITS CONTENTS MAY NOT BE USED FOR ANY OTHER PURPOSE AND MAY NOT BE REPRODUCED OR DISCLOSED TO OTHERS WITHOUT THE PRIOR WRITTEN CONSENT OF SVA ARCHITECTS INC. ALL RIGHTS RESERVED, © COPYRIGHT 2018.

REGISTERED PROFESSIONAL ENGINEER — NIKOLAOS J. KOURASSIS — No. M31713 Exp. 6/30/2025 — MECHANICAL — STATE OF CALIFORNIA

REVISIONS			
NO.	DESCRIPTION	DATE	APPROVED
1	90% CD SUBMITTAL	12/15/2022	
2	100% CD SUBMITTAL	03/01/2023	
3	FINAL SUBMITTAL	04/30/2023	

B.M.: THE CITY OF GARDENA BENCHMARK NO. SD-15
ELEV. = 43.508'

CITY OF GARDENA
DEPARTMENT OF PUBLIC WORKS - ENGINEERING

MECHANICAL TITLE 24

COMMUNITY AQUATICS & SENIOR CENTER

M0.05

	INITIAL	DATE
DESIGNED BY		06/25/2022
DRAWN BY		06/20/23
CHECKED BY		06/29/23

APPROVED BY:

APPROVED BY: DIRECTOR OF PUBLIC WORKS

SHT. 114 OF 195 DWG. NO. 5-2606

PLOT DATE: 5/20/2023 10:41:17 PM

GENERAL NOTES

1. ALL THERMOSTATS INSTALLED ON EXTERIOR WALLS OR COLUMNS SHALL HAVE AN INSULATED BACKING INSTALLED BEHIND THE THERMOSTAT.
2. THERMOSTAT SHALL BE INSTALLED 48" ABOVE FINISHED FLOOR. FINAL THERMOSTAT LOCATION SHALL BE COORDINATED WITH FURNITURE LAYOUT AND APPROVED BY THE ARCHITECT.
3. COORDINATE THERMOSTAT LOCATIONS TO GROUP THEM WITH LIGHT SWITCHES.

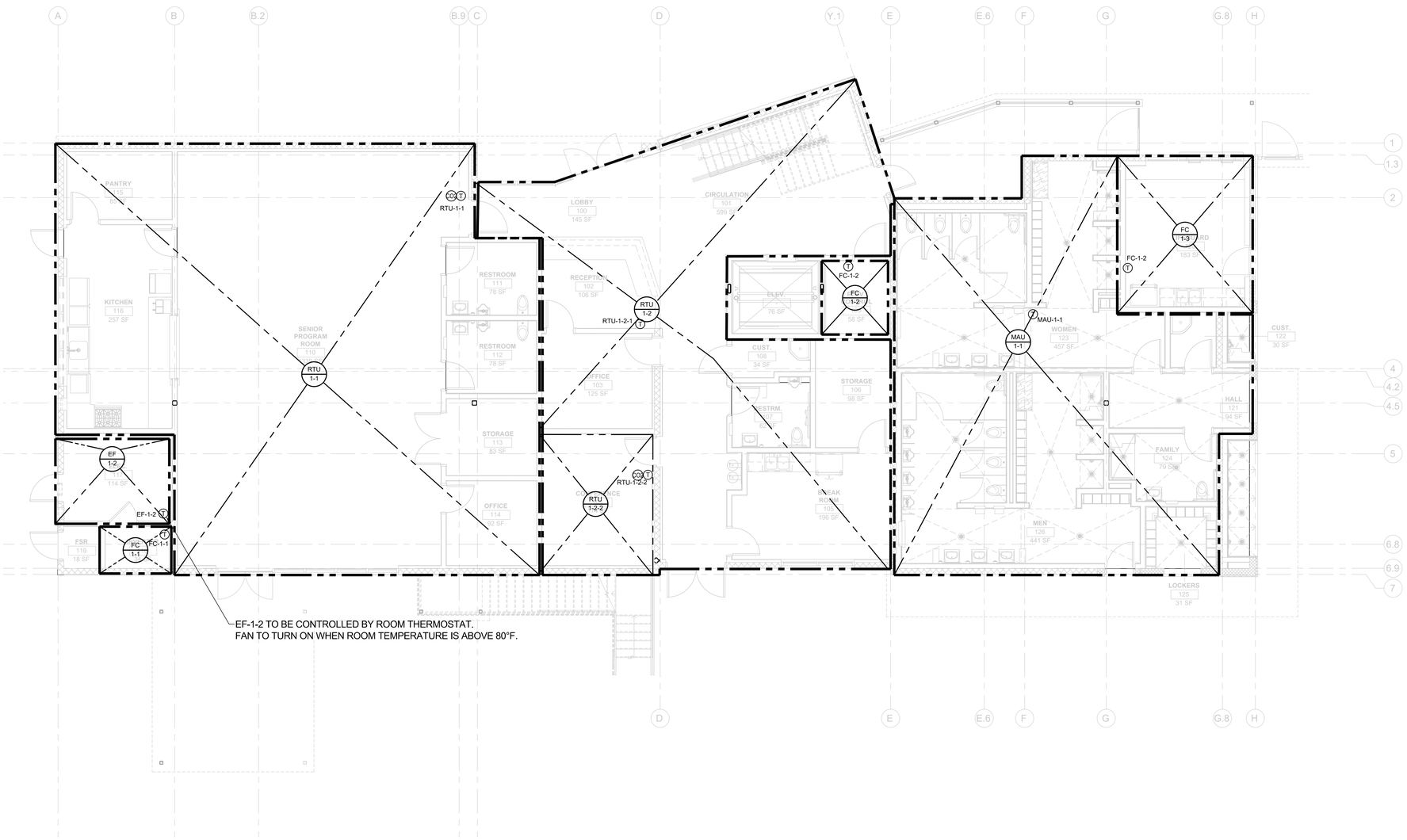

EF-1-2 TO BE CONTROLLED BY ROOM THERMOSTAT.
FAN TO TURN ON WHEN ROOM TEMPERATURE IS ABOVE 80°F.

1 - FIRST FLOOR MECHANICAL ZONING PLAN

SCALE: 3/16" = 1'-0"

NORTH

ALFATECH
421 EAST HUNTINGTON DRIVE
MONROVIA, CA 91016
PHONE: (213) 212-9860
www.atce.com

PREPARED BY:

SVA ARCHITECTS
6 HUTTON CENTRE DR, SUITE 1150
SANTA ANA, CA 92707
T 949.809.3380 WWW.SVA-ARCHITECTS.COM

THIS DOCUMENT CONTAINS INFORMATION PROPRIETARY TO SVA ARCHITECTS INC. AND IS FURNISHED IN CONFIDENCE FOR THE LIMITED PURPOSE OF EVALUATION, BIDDING OR REVIEW. THIS DOCUMENT OR ITS CONTENTS MAY NOT BE USED FOR ANY OTHER PURPOSE AND MAY NOT BE REPRODUCED OR DISCLOSED TO OTHERS WITHOUT THE PRIOR WRITTEN CONSENT OF SVA ARCHITECTS INC. ALL RIGHTS RESERVED. © COPYRIGHT 2018.

REGISTERED PROFESSIONAL ENGINEER — JESS J. ROMO — No. M31713 — Exp. 6/30/2025 — MECHANICAL — STATE OF CALIFORNIA

REVISIONS

NO.	DESCRIPTION	DATE	APPROVED
1	90% CD SUBMITTAL	12/15/2022	
2	100% CD SUBMITTAL	06/01/2023	
3	FINAL SUBMITTAL	06/30/2023	

B.M.: THE CITY OF GARDENA BENCHMARK NO. 5D-15
ELEV. = 43.508'

	INITIAL	DATE
DESIGNED BY		06/28/2022
DRAWN BY		06/20/23
CHECKED BY		06/29/23

CITY OF GARDENA
DEPARTMENT OF PUBLIC WORKS - ENGINEERING
FIRST FLOOR MECHANICAL ZONING PLAN
COMMUNITY AQUATICS & SENIOR CENTER
M2.01

APPROVED BY:

APPROVED BY: DIRECTOR OF PUBLIC WORKS

SHT. 115 OF 195 DWG. NO. 5-2606

PLOT DATE: 6/30/2023 8:04:11 PM

GENERAL NOTES

1. ALL THERMOSTATS INSTALLED ON EXTERIOR WALLS OR COLUMNS SHALL HAVE AN INSULATED BACKING INSTALLED BEHIND THE THERMOSTAT.
2. THERMOSTAT SHALL BE INSTALLED 48" ABOVE FINISHED FLOOR. FINAL THERMOSTAT LOCATION SHALL BE COORDINATED WITH FURNITURE LAYOUT AND APPROVED BY THE ARCHITECT.
3. COORDINATE THERMOSTAT LOCATIONS TO GROUP THEM WITH LIGHT SWITCHES.

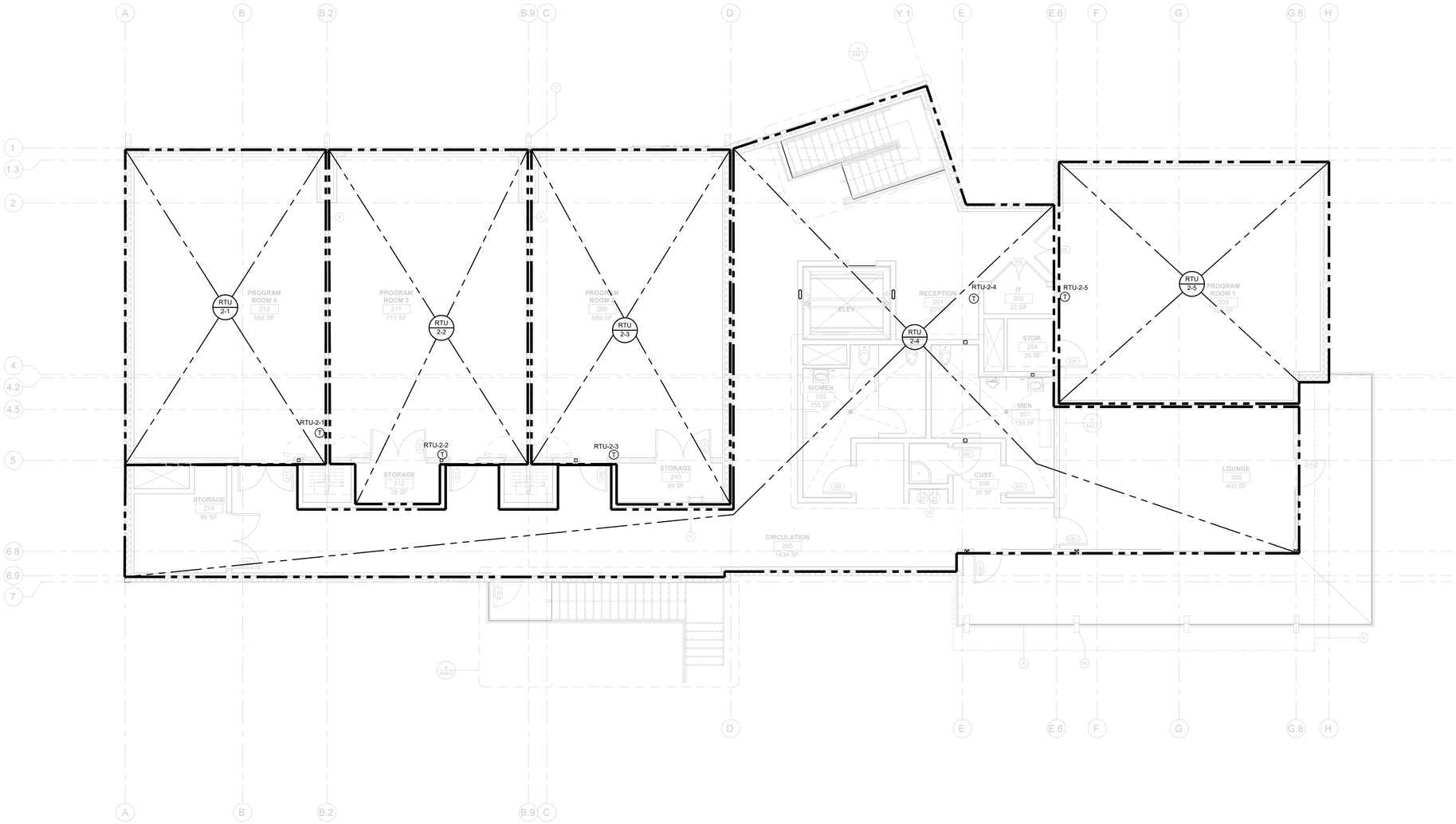

1 - SECOND FLOOR MECHANICAL ZONING PLAN

SCALE: 3/16" = 1'-0"

NORTH

ALFATECH
421 EAST HUNTINGTON DRIVE
MONROVIA, CA 91016
PHONE: (213) 212-9860
www.atce.com

PREPARED BY:
SVA ARCHITECTS
6 HUTTON CENTRE DR, SUITE 1150
SANTA ANA, CA 92707
T 949.809.3380 WWW.SVA-ARCHITECTS.COM

THIS DOCUMENT CONTAINS INFORMATION PROPRIETARY TO SVA ARCHITECTS INC. AND IS FURNISHED IN CONFIDENCE FOR THE LIMITED PURPOSE OF EVALUATION, BIDDING OR REVIEW. THIS DOCUMENT OR ITS CONTENTS MAY NOT BE USED FOR ANY OTHER PURPOSE AND MAY NOT BE REPRODUCED OR DISCLOSED TO OTHERS WITHOUT THE PRIOR WRITTEN CONSENT OF SVA ARCHITECTS INC. ALL RIGHTS RESERVED. © COPYRIGHT 2018.

REGISTERED PROFESSIONAL ENGINEER
NICHOLAS J. KOURTAKIS
No. M31713
Exp. 6/30/2025
MECHANICAL
STATE OF CALIFORNIA

REVISIONS

NO.	DESCRIPTION	DATE	APPROVED
1	90% CD SUBMITTAL	12/15/2022	
2	100% CD SUBMITTAL	05/01/2023	
3	FINAL SUBMITTAL	06/30/2023	

B.M.: THE CITY OF GARDENA BENCHMARK NO. 5D-15
ELEV. = 43.508'

CITY OF GARDENA
DEPARTMENT OF PUBLIC WORKS - ENGINEERING

SECOND FLOOR MECHANICAL ZONING PLAN

COMMUNITY AQUATICS & SENIOR CENTER

M2.02

	INITIAL	DATE
DESIGNED BY		05/25/2022
DRAWN BY		06/20/23
CHECKED BY		06/29/23

APPROVED BY:

APPROVED BY: DIRECTOR OF PUBLIC WORKS

SHT. 116 OF 195 DWG. NO. 5-2606

FILE PATH: E:\20.2022 5-04-11 PM
PLOT DATE: 6/30/2023 5:04:11 PM

KEYNOTES

1. 26x14 SA & RA DUCT UP TO SECOD FLOOR.
2. 18x14 SA & 20x14 RA DUCT UP TO SECOD FLOOR.
3. 24x14 MAKE-UP AIR DUCT UP TO SECOND FLOOR.
4. 24x14 EA DUCT UP TO SECOND FLOOR.
5. PROVIDE FLEX DUCT CONNECTOR AT INLET AND DISCHARGE.
6. PROVIDE 1" INTERNAL LINING.
7. SIZE RL & RS LINES PER MANUFACTURER'S RECOMMENDATION BASE ON TOTAL DEVELOPED LENGTH.
8. 16"x14" EXHAUST AIR WALL LOUVER. SEE ARCH. DWG FOR MORE INFORMATION.
9. 10"x10" EXHAUST AIR WALL LOUVER. SEE ARCH. DWG FOR MORE INFORMATION.
10. 4" INSIDE CLEARANCE FOR ALL SIDES IN MECHANICAL CHASE.
11. SEE DETAIL #7/M5.02 FOR DAMPER CONTROL AT GYPSUM BOARD CEILING AREA.
12. MINIMUM 3/4" CLEARANCE UNDERCUT DOOR. SEE ARCHITECTURAL DRAWING.
13. REFRIGERANT PIPE UP.

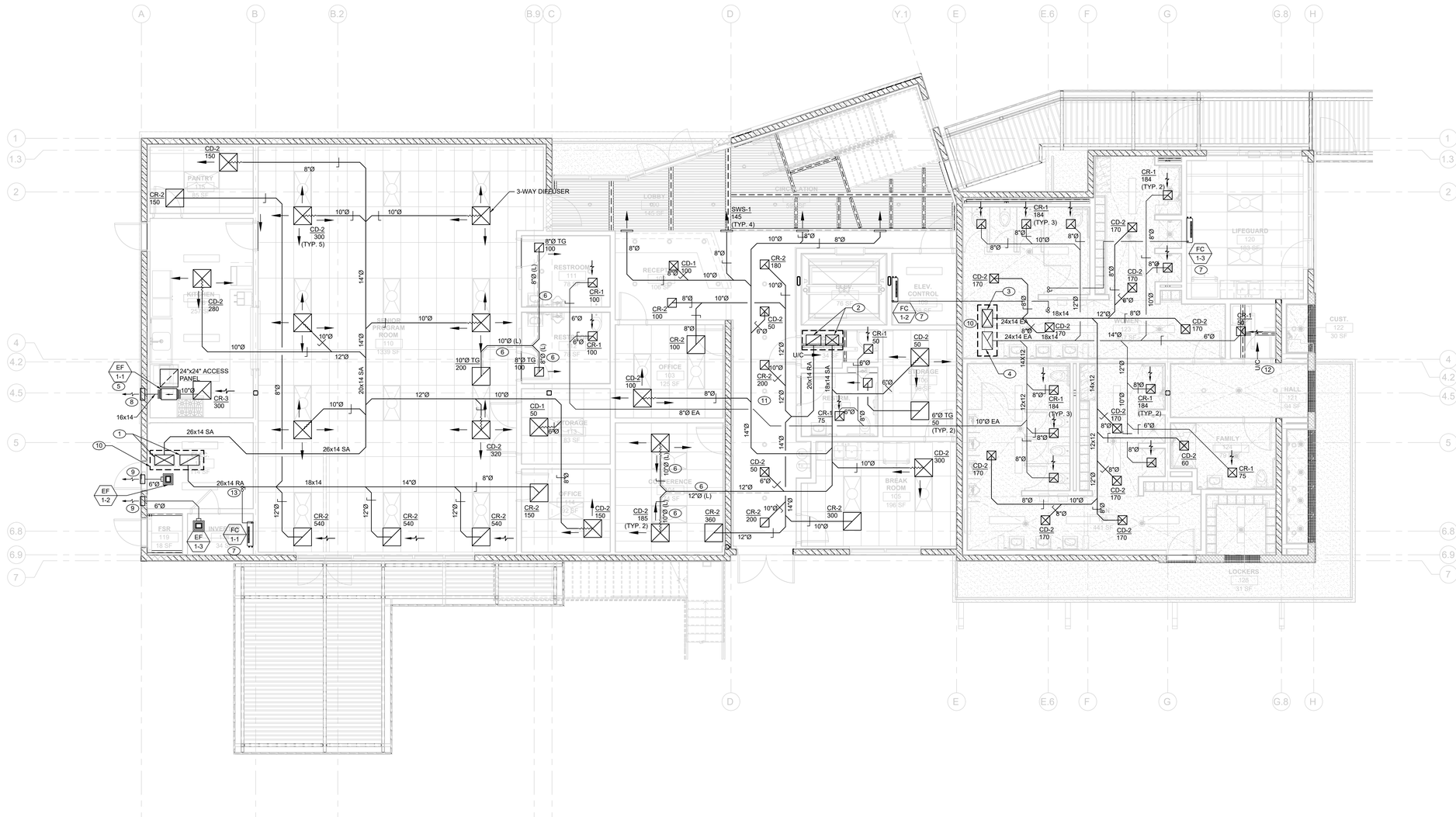

1 - FIRST FLOOR MECHANICAL PLAN

SCALE: 3/16" = 1'-0"

NORTH

ALFATECH
421 EAST HUNTINGTON DRIVE
MONROVIA, CA 91016
PHONE: (213) 212-9860
www.atce.com

CITY OF GARDENA FREEWAY CITY INCORPORATED 1930

PREPARED BY:

SVA ARCHITECTS
6 HUTTON CENTRE DR, SUITE 1150
SANTA ANA, CA 92707
T 949.809.3380 WWW.SVA-ARCHITECTS.COM

THIS DOCUMENT CONTAINS INFORMATION PROPRIETARY TO SVA ARCHITECTS INC. AND IS FURNISHED IN CONFIDENCE FOR THE LIMITED PURPOSE OF EVALUATION, BIDDING OR REVIEW. THIS DOCUMENT OR ITS CONTENTS MAY NOT BE USED FOR ANY OTHER PURPOSE AND MAY NOT BE REPRODUCED OR DISCLOSED TO OTHERS WITHOUT THE PRIOR WRITTEN CONSENT OF SVA ARCHITECTS INC. ALL RIGHTS RESERVED. © COPYRIGHT 2018.

REGISTERED PROFESSIONAL ENGINEER
NICHOLAS J. KOURTZ
No. M31713
Exp. 6/30/2025
MECHANICAL
STATE OF CALIFORNIA

REVISIONS

NO.	DESCRIPTION	DATE	APPROVED
1	90% CD SUBMITTAL	12/15/2022	
2	100% CD SUBMITTAL	05/01/2023	
3	FINAL SUBMITTAL	06/30/2023	

B.M.: THE CITY OF GARDENA BENCHMARK NO. 5D-15
ELEV. = 43.508'

CITY OF GARDENA
DEPARTMENT OF PUBLIC WORKS - ENGINEERING

FIRST FLOOR MECHANICAL PLAN

COMMUNITY AQUATICS & SENIOR CENTER
M2.11

	INITIAL	DATE
DESIGNED BY		05/25/2022
DRAWN BY		06/20/23
CHECKED BY		06/29/23

APPROVED BY:

APPROVED BY: DIRECTOR OF PUBLIC WORKS

SHT. 117 OF 195 DWG. NO. 5-2606

FILE PATH:
PLOT DATE: 6/30/2023 5:04:11 PM

KEYNOTES

1. 32x18 SA & RA DUCT UP THRU ROOF.
2. 26x14 SA & RA DUCT DN TO FIRST FLOOR.
3. 24x14 MAKE-UP AIR DUCT DN TO FIRST FLOOR & UP THRU ROOF.
4. 24x14 EA DUCT DN TO FIRST FLOOR.
5. 18x18 EA DUCT UP THRU ROOF AND CONNECT TO EF-1-4.
6. 12x12 EA DUCT UP THRU ROOF AND CONNECT TO EF-2-1.
7. MINIMUM 1/2" CLEARANCE UNDERCUT DOOR. SEE ARCHITECTURAL DRAWING.
8. MINIMUM 3/4" CLEARANCE UNDERCUT DOOR. SEE ARCHITECTURAL DRAWING.
9. PROVIDE 1" INTERNAL LINING.
10. SEE DETAIL #7/M5.02 FOR DAMPER CONTROL AT GYPSUM BOARD CEILING AREA.
11. 4" INSIDE CLEARANCE FOR ALL SIDES IN MECHANICAL CHASE.
12. 18x14 SA & 20x14 RA DUCT DN TO FIRST FLOOR.
13. 3'-8" x 3'-0" x 1'-4" (H) SA PLENUM.
14. 3'-0" x 3'-0" x 1'-4" (H) RA PLENUM.
15. REFRIGERANT PIPE UP.
16. REFRIGERANT PIPE DN.

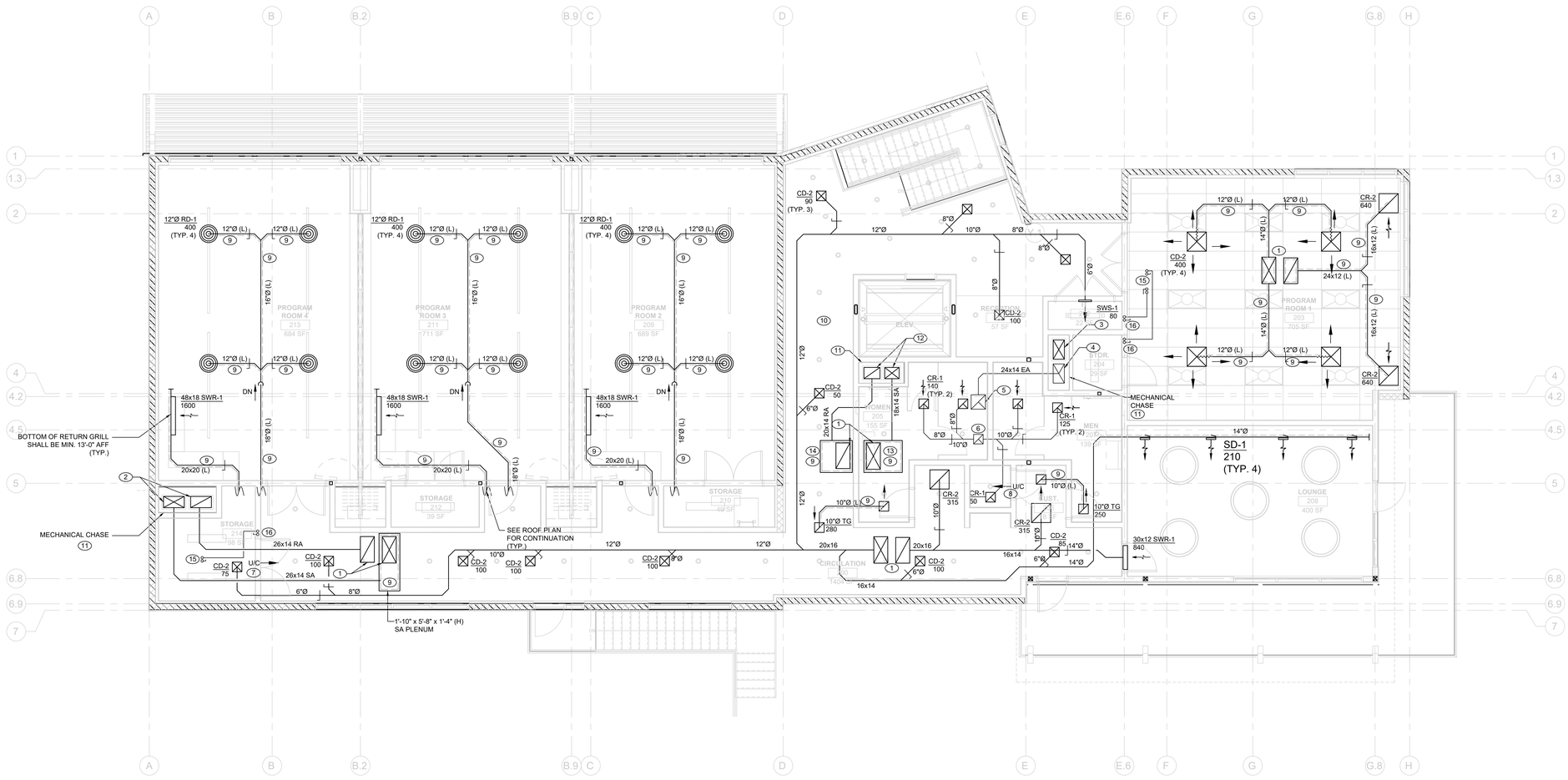

1 - SECOND FLOOR MECHANICAL PLAN

SCALE: 3/16" = 1'-0"

NORTH

ALFATECH
421 EAST HUNTINGTON DRIVE
MONROVIA, CA 91016
PHONE: (213) 212-9860
www.atce.com

PREPARED BY:
SVA ARCHITECTS
6 HUTTON CENTRE DR, SUITE 1150
SANTA ANA, CA 92707
T 949.809.3380 WWW.SVA-ARCHITECTS.COM

THIS DOCUMENT CONTAINS INFORMATION PROPRIETARY TO SVA ARCHITECTS INC. AND IS FURNISHED IN CONFIDENCE FOR THE LIMITED PURPOSE OF EVALUATION, BIDDING OR REVIEW. THIS DOCUMENT OR ITS CONTENTS MAY NOT BE USED FOR ANY OTHER PURPOSE AND MAY NOT BE REPRODUCED OR DISCLOSED TO OTHERS WITHOUT THE PRIOR WRITTEN CONSENT OF SVA ARCHITECTS INC. ALL RIGHTS RESERVED. © COPYRIGHT 2018.

REGISTERED PROFESSIONAL ENGINEER — No. M31713 — Exp. 6/30/2025 — MECHANICAL — STATE OF CALIFORNIA

REVISIONS			
NO.	DESCRIPTION	DATE	APPROVED
1	90% CD SUBMITTAL	12/15/2022	
2	100% CD SUBMITTAL	05/01/2023	
3	FINAL SUBMITTAL	06/30/2023	

B.M.: THE CITY OF GARDENA BENCHMARK NO. SD-15
ELEV. = 43.508'

	INITIAL	DATE
DESIGNED BY		05/25/2022
DRAWN BY		06/20/23
CHECKED BY		06/27/23

CITY OF GARDENA
DEPARTMENT OF PUBLIC WORKS - ENGINEERING
SECOND FLOOR MECHANICAL PLAN
COMMUNITY AQUATICS & SENIOR CENTER
M2.12

APPROVED BY:
APPROVED BY: DIRECTOR OF PUBLIC WORKS
SHT. 118 OF 195 DWG. NO. 5-2606

PLOT DATE: 6/26/2023 8:04:11 PM

KEYNOTES

1. PROVIDE MINIMUM R-8 INSULATED LINING FOR DUCTWORK INSTALLED OUTDOORS. PAINT EXPOSED DUCT.
2. SIZE RL & RS LINES PER MANUFACTURER'S RECOMMENDATION BASE ON TOTAL DEVELOPED LENGTH. BOTH REFRIGERANT PIPING SHALL BE INSULATED WITH SHEET METAL JACKETS.

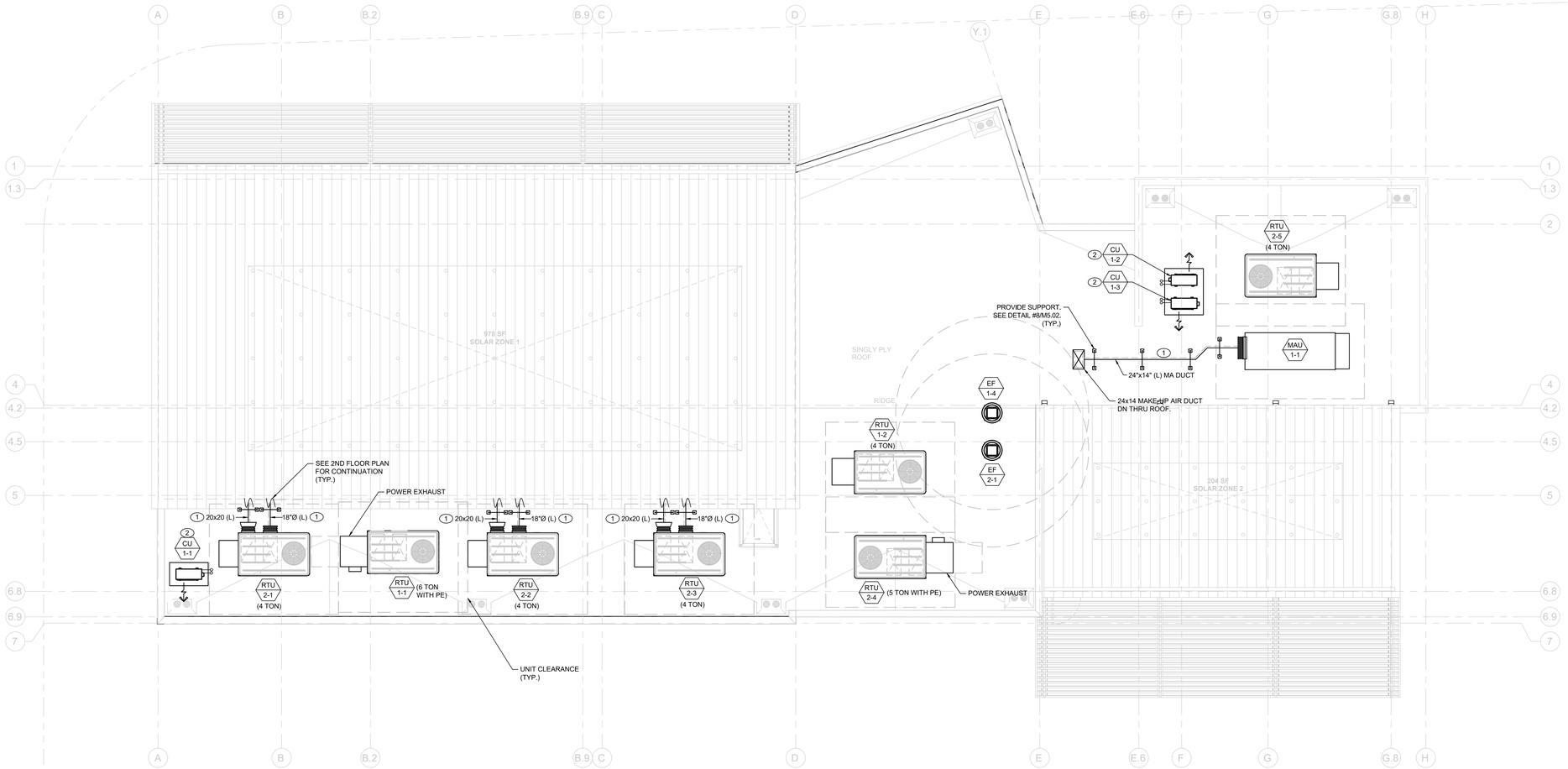

1 - MECHANICAL ROOF PLAN

SCALE: 3/16" = 1'-0"

NORTH

ALFATECH
421 EAST HUNTINGTON DRIVE
MONROVIA, CA 91016
PHONE: (213) 212-9860
www.atce.com

PREPARED BY:
SVA ARCHITECTS
6 HUTTON CENTRE DR, SUITE 1150
SANTA ANA, CA 92707
T 949.809.3380 WWW.SVA-ARCHITECTS.COM

THIS DOCUMENT CONTAINS INFORMATION PROPRIETARY TO SVA ARCHITECTS INC. AND IS FURNISHED IN CONFIDENCE FOR THE LIMITED PURPOSE OF EVALUATION, BIDDING OR REVIEW. THIS DOCUMENT OR ITS CONTENTS MAY NOT BE USED FOR ANY OTHER PURPOSE AND MAY NOT BE REPRODUCED OR DISCLOSED TO OTHERS WITHOUT THE PRIOR WRITTEN CONSENT OF SVA ARCHITECTS INC. ALL RIGHTS RESERVED. © COPYRIGHT 2018.

REGISTERED PROFESSIONAL ENGINEER — No. M31713 — Exp. 6/30/2025 — MECHANICAL — STATE OF CALIFORNIA

B.M.: THE CITY OF GARDENA BENCHMARK NO. SD-15
ELEV. = 43.508'

REVISIONS

NO.	DESCRIPTION	DATE	APPROVED
1	90% CD SUBMITTAL	12/15/2022	
2	100% CD SUBMITTAL	05/01/2023	
3	FINAL SUBMITTAL	06/30/2023	

	INITIAL	DATE
DESIGNED BY		05/25/2022
DRAWN BY		06/20/23
CHECKED BY		06/29/23

CITY OF GARDENA
DEPARTMENT OF PUBLIC WORKS - ENGINEERING
MECHANICAL ROOF PLAN
COMMUNITY AQUATICS & SENIOR CENTER
M2.13

APPROVED BY:

APPROVED BY: DIRECTOR OF PUBLIC WORKS

SHT. 119 OF 195 DWG. NO. 5-2606

PLOT DATE: 6/30/2023 5:04:11 PM

KEYNOTES

1. (2) 68"x24" HIGH & LOW COMBUSTION AIR LOUVER WITH SFD. (1) COMMENCING 12" AFF AND (1) COMMENCING 12" BELOW STRUCTURE ABOVE. PROVIDE DUCT SLEEVE AS NEEDED. SEE ARCHITECTURAL DRAWING.
2. 8" DIA. BOILER DUCT FLUE UP THRU ROOF WITH FLUE CAP.
3. 8" DIA. BOILER DUCT FLUE WITH FLUE CAP DN THRU ROOF.
4. MIN. 12"x8" DOOR LOUVER. SEE ARCHITECTURAL DRAWING.
5. 6" DIA. EA DUCT UP THRU ROOF AND CONNECT TO EXHAUST FAN. PROVIDE 1/2" WIRE MESH SCREEN AT EA DUCT OPENING.

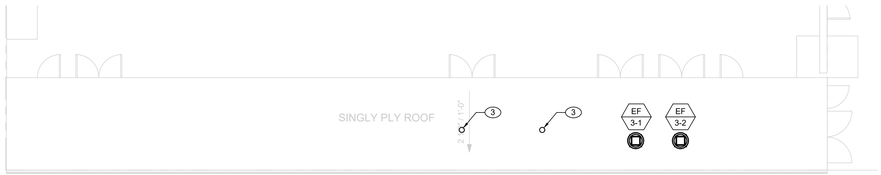

MECHANICAL ROOF PLAN - POOL BUILDING | 1/8" = 1'-0" | 2

COMBUSTION AIR VENT CALCULATION

4000 BTU REQUIRED OPENING = 1 SQ IN. (PER CMC)
1.5 MILLION BTU REQUIRED OPENING = (1,500,000 ÷ 4000) =375 SQ IN.

(LOUVER WILL BE 50% FREE AREA)
REQUIRED COMBUSTION AIR LOUVER = 375 X 2 = 750 SQ IN.

2 x 1.5 MILLION BUT REQUIRED OPENING = 750 x 2 = 1500 SQ IN.

PROVIDED COMBUSTION AIR LOUVER (HI & LOW) = 1632 SQ IN.

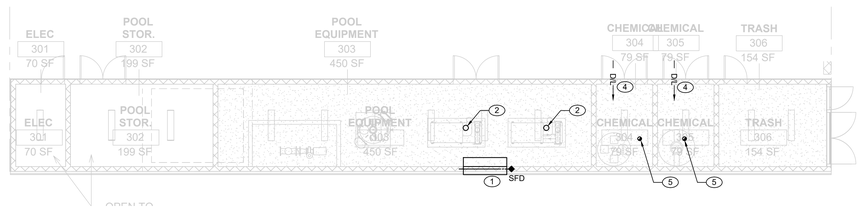

MECHANICAL PLAN - POOL BUILDING | 1/8" = 1'-0" | 1

ALFATECH
421 EAST HUNTINGTON DRIVE
MONROVIA, CA 91016
PHONE: (213) 212-9860
www.atce.com

PREPARED BY:

SVA ARCHITECTS
6 HUTTON CENTRE DR, SUITE 1150
SANTA ANA, CA 92707
T 949.809.3380 WWW.SVA-ARCHITECTS.COM

THIS DOCUMENT CONTAINS INFORMATION PROPRIETARY TO SVA ARCHITECTS INC. AND IS FURNISHED IN CONFIDENCE FOR THE LIMITED PURPOSE OF EVALUATION, BIDDING OR REVIEW. THIS DOCUMENT OR ITS CONTENTS MAY NOT BE USED FOR ANY OTHER PURPOSE AND MAY NOT BE REPRODUCED OR DISCLOSED TO OTHERS WITHOUT THE PRIOR WRITTEN CONSENT OF SVA ARCHITECTS INC. ALL RIGHTS RESERVED. © COPYRIGHT 2018.

REGISTERED PROFESSIONAL ENGINEER — JAMES J. KOSS — No. M31713 Exp. 6/30/2025 — MECHANICAL — STATE OF CALIFORNIA

B.M.: THE CITY OF GARDENA BENCHMARK NO. SD-15 ELEV. = 43.508'

REVISIONS

NO.	DESCRIPTION	DATE	APPROVED
1	90% CD SUBMITTAL	12/15/2022	
2	100% CD SUBMITTAL	05/01/2023	
3	FINAL SUBMITTAL	06/30/2023	

	INITIAL	DATE
DESIGNED BY		05/25/2022
DRAWN BY		06/20/23
CHECKED BY		06/29/23

CITY OF GARDENA
DEPARTMENT OF PUBLIC WORKS - ENGINEERING
MECHANICAL PLANS - POOL BUILDING
COMMUNITY AQUATICS & SENIOR CENTER
M3.11

APPROVED BY:

APPROVED BY: DIRECTOR OF PUBLIC WORKS

SHT. 120 OF 195 DWG. NO. 5-2606

PLOT DATE: 6/30/2023 8:04:11 PM

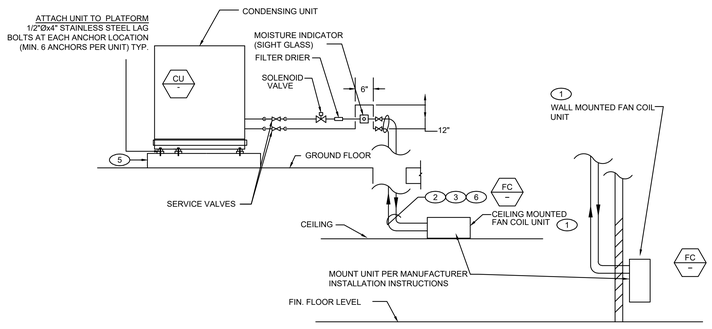

NOTES:

1. FAN COIL UNITS SHALL BE LOCATED SUCH THAT UNIT CAN BE SERVICED AND REMOVED WITHOUT REMOVAL OF PERMANENT CONSTRUCTION. LOCATION SHALL ALSO CONFORM TO MANUFACTURER'S RECOMMENDATION.
2. INSULATE BOTH REFRIGERANT PIPES SUCTION LINES & LIQUID ON HEAT PUMP UNITS NO PIPE INSULATION IS REQUIRED FOR LIQUID LINE ON COOLING ONLY UNITS, IF APPLICABLE.
3. INSTALL PIPES IN STUD WALL WITH TRISOLATOR PIPE SUPPORT.
4. NOT USED
5. EQUIPMENT PAD. REFER TO STRUCTURAL DETAILS FOR EQUIPMENT PAD ON ROOF.
6. INSTALL AND SIZE REFRIGERANT PIPING PER MF'R RECOMMENDATIONS. APPLY LONG LINE APPLICATION DATA IF VERTICAL LINES ARE ABOVE 50 FT.
7. PROVIDE ALUMINUM JACKET ON ALL ROOF REFRIGERANT LINES.

SPLIT SYSTEM MOUNTING AND PIPING DETAILS

SCALE NONE | 9

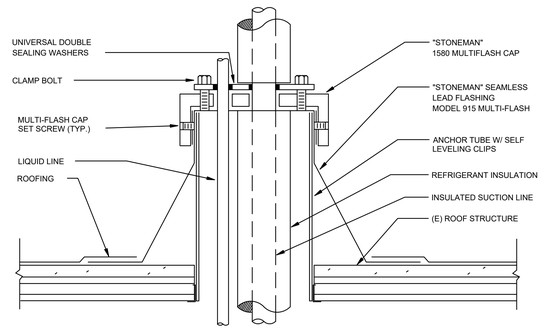

NOTE:

1. INSTALL MULTIFLASH ASSEMBLY PER MANUFACTURER'S INSTRUCTIONS.
2. CONTROL & POWER WIRING/CONDUIT MAY RUN THRU FLASHING ASSEMBLY (VERIFY).
3. MUTLI-FLASH ASSY.

REFRIGERANT PIPING THRU ROOF DETAIL

SCALE NONE | 6

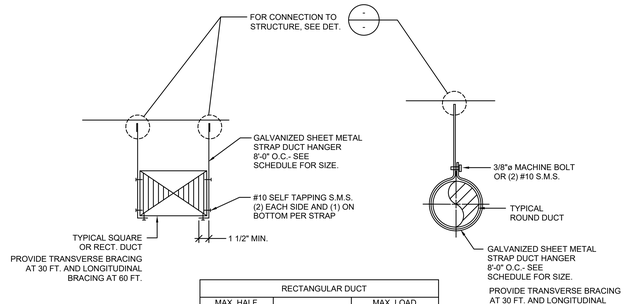

RECTANGULAR DUCT		
MAX. HALF OF DUCT PERIMETER/IN.	STRAP	MAX. LOAD EACH HANGER/LBS.
P/2 =72	1"X 20 GA.	100
P/2 =96	1"X 18 GA.	150
P/2 =192	1"X 16 GA.	300

NOTE:

1. DUCTS OF 6 SF IN CROSS SECTION OR LARGER SHALL BE PROVIDED WITH SUPPORT, DIAGONAL SEISMIC BRACE & LONGITUDINAL BRACE PER MASON WEST OPM-0043-13.
2. SEE MEP COMPONENT ANCHORAGE NOTES ON SHEET M0.01 FOR REQUIREMENT.

DUCT SUPPORT DETAIL

SCALE NONE | 3

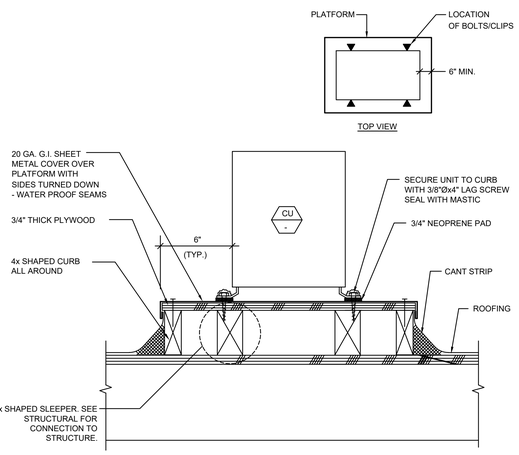

CONDENSING UNIT SUPPORT DETAIL ON ROOF

SCALE NONE | 8

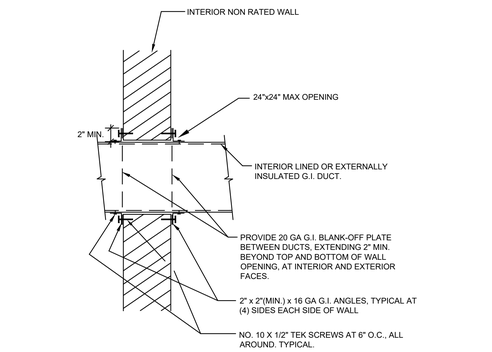

DUCT THRU NON-RATED WALL

SCALE NONE | 5

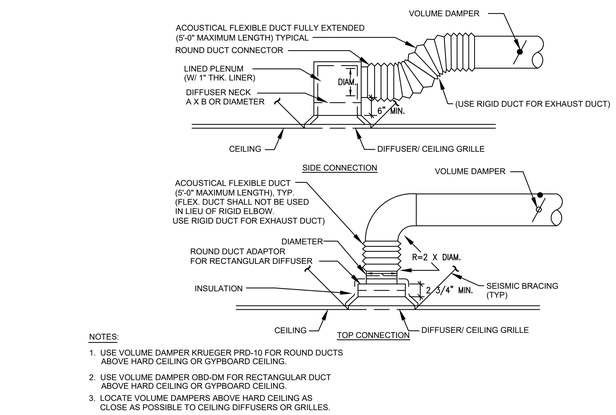

NOTES:

1. USE VOLUME DAMPER KRUEGER PRD-10 FOR ROUND DUCTS ABOVE HARD CEILING OR GYPBOARD CEILING.
2. USE VOLUME DAMPER OBD-DM FOR RECTANGULAR DUCT ABOVE HARD CEILING OR GYPBOARD CEILING.
3. LOCATE VOLUME DAMPERS ABOVE HARD CEILING AS CLOSE AS POSSIBLE TO CEILING DIFFUSERS OR GRILLES.

DIFFUSER CONNECTION DETAIL

SCALE NONE | 2

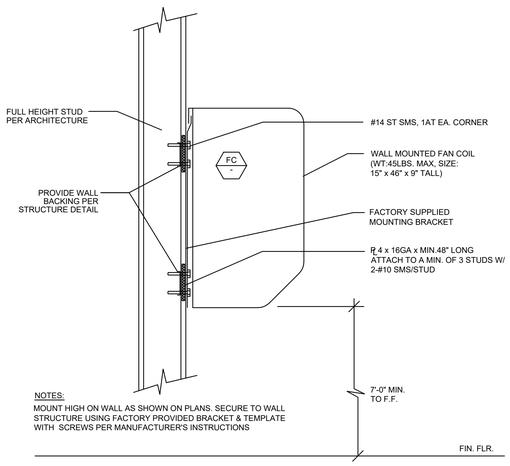

NOTES:

MOUNT HIGH ON WALL AS SHOWN ON PLANS. SECURE TO WALL STRUCTURE USING FACTORY PROVIDED BRACKET & TEMPLATE WITH SCREWS PER MANUFACTURER'S INSTRUCTIONS

SPLIT SYSTEM FAN COIL UNIT MOUNTING DETAIL

SCALE NONE | 7

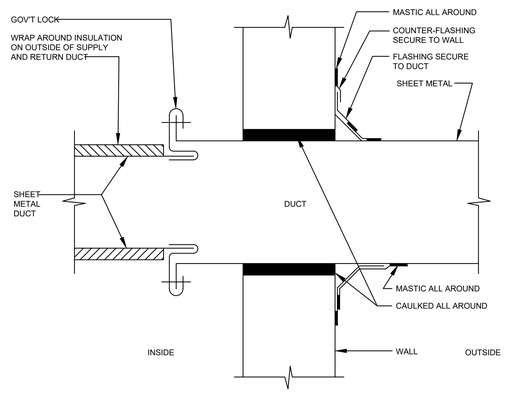

NOTES:

1. FOR DESIGN #, SEE ARCH. DWGS.

DUCT THRU EXTERIOR WALL DETAIL

SCALE NONE | 1

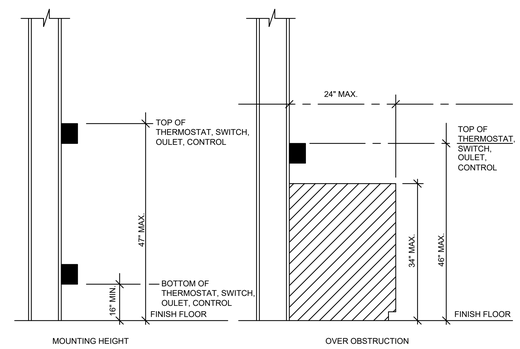

NOTES:

WOOD BASE WITH PIPE CLAMPS AND/OR PLUMBERS TAPE IS NOT ALLOWED.

THERMOSTAT MOUNTING DETAIL

SCALE NONE | 1

ALFATECH
421 EAST HUNTINGTON DRIVE
MONROVIA, CA 91016
PHONE: (213) 212-9860
www.atce.com

CITY OF GARDENA — INCORPORATED 1930

PREPARED BY:
SVA ARCHITECTS
6 HUTTON CENTRE DR, SUITE 1150
SANTA ANA, CA 92707
T 949.809.3380 WWW.SVA-ARCHITECTS.COM

THIS DOCUMENT CONTAINS INFORMATION PROPRIETARY TO SVA ARCHITECTS INC. AND IS FURNISHED IN CONFIDENCE FOR THE LIMITED PURPOSE OF EVALUATION, BIDDING OR REVIEW. THIS DOCUMENT OR ITS CONTENTS MAY NOT BE USED FOR ANY OTHER PURPOSE AND MAY NOT BE REPRODUCED OR DISCLOSED TO OTHERS WITHOUT THE PRIOR WRITTEN CONSENT OF SVA ARCHITECTS INC. ALL RIGHTS RESERVED. © COPYRIGHT 2018.

REGISTERED PROFESSIONAL ENGINEER — No. M31713 — Exp. 6/30/2025 — MECHANICAL — STATE OF CALIFORNIA

B.M.: THE CITY OF GARDENA BENCHMARK NO. SD-15 ELEV. = 43.508'

REVISIONS

NO.	DESCRIPTION	DATE	APPROVED
1	90% CD SUBMITTAL	12/15/2022	
2	100% CD SUBMITTAL	05/01/2023	
3	FINAL SUBMITTAL	06/30/2023	

	INITIAL	DATE
DESIGNED BY		05/25/2022
DRAWN BY		06/20/23
CHECKED BY		06/27/23

CITY OF GARDENA
DEPARTMENT OF PUBLIC WORKS - ENGINEERING
MECHANICAL DETAILS
COMMUNITY AQUATICS & SENIOR CENTER
M5.01

APPROVED BY:

APPROVED BY: DIRECTOR OF PUBLIC WORKS

SHT. 121 OF 195 DWG. NO. S-2606

PLOT DATE: 6/30/2023 3:04:11 PM

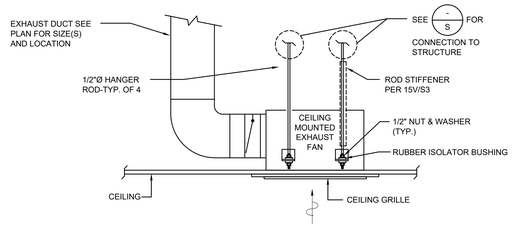

NOTE:

1. CONNECT TO CEILING REGISTER WITH EXHAUST DUCT. SEE PLANS FOR SIZES AND LOCATIONS.

CEILING MOUNTED EXHAUST FAN MOUNTING DETAIL | SCALE NONE | 9

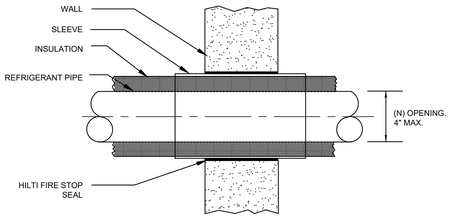

NOTES:

1. PROVIDE 16" MIN. SPACING BETWEEN ADJACENT OPENINGS.
2. DO NOT CUT OR DAMAGE REBAR IN EXISTING CONCRETE WALL.
3. DO NOT CUT OR DAMAGE EXISTING WALL STUDS.

WALL REFRIGERANT PIPE PENETRATION DETAIL | SCALE NONE | 6

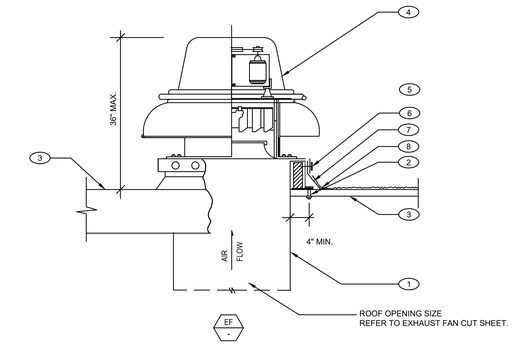

1. EXHAUST DUCT. (SEE PLANS FOR SIZES)
2. (2) 3/8" Ø HILTI KB TZ (2" EMBED) ALL 4 SIDES. SEE STRUCTURAL FOR INSTALLATION REQUIREMENTS
3. ROOF STRUCTURE. (SEE STRUCTURAL DWG'S.)
4. EXHAUST FAN. MAX OPERATING WEIGHT = 63 POUNDS.
5. FACTORY CURB .
6. (2) #14 SHEET METAL SCREWS ALL 4 SIDES.
7. FLASHING.
8. ROOFING.

ROOF EXHAUST FAN DETAIL | SCALE NONE | 3

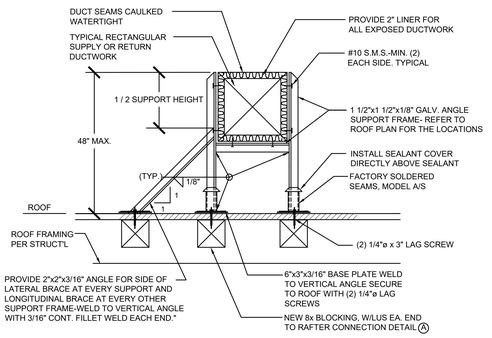

BASEPLATE DETAIL

NOTE:
ANGLE FLASHING SHALL BE AS MANUFACTURED BY SBC INDUSTRIES, MODEL A/S, FABRICATED FROM 26 GA. STAINLESS STEEL, TYPE 304, 2B FINISH.

Ⓐ RAFTER CONNECTION DETAIL

DUCT SUPPORT ON THE ROOF DETAIL | SCALE NONE | 8

NOTES:

1. PROVIDE 16" MIN. SPACING BETWEEN ADJACENT OPENINGS.
2. DO NOT CUT OR DAMAGE REBAR IN EXISTING SLAB.

REFRIGERANT PIPE FLOOR PENETRATION | SCALE NONE | 5

SINGLE LINE DIAGRAM	DOUBLE LINE CONFIGURATION	SINGLE LINE DIAGRAM	DOUBLE LINE CONFIGURATION
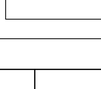	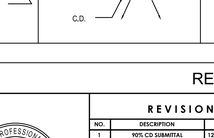	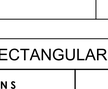	

ROUND DUCTWORK DETAIL | SCALE NONE | 2

NOTE:

1. COORDINATE EXACT LOCATION OF CEILING MOUNTED CONCEALED REGULATOR WITH ARCHITECT PRIOR TO INSTALLATION.
2. PROVIDE YOUNG REGULATOR WITH BOWDEN CABLE CONTROL SYSTEM

YOUNG REGULATOR REMOTE CABLE SYSTEM DETAIL | SCALE NONE | 7

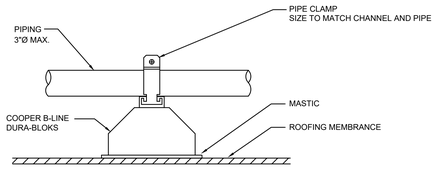

NOTE: SPACE SUPPORTS AT MAX. 8'-0" ON CENTER

PIPING SUPPORT ON ROOF DETAIL | SCALE NONE | 4

SINGLE LINE DIAGRAM	DOUBLE LINE CONFIGURATION	SINGLE LINE DIAGRAM	DOUBLE LINE CONFIGURATION

RECTANGULAR DUCTWORK DETAIL | SCALE NONE | 1

ALFATECH
421 EAST HUNTINGTON DRIVE
MONROVIA, CA. 91016
PHONE: (213) 212-9860
www.atce.com

PREPARED BY:
SVA ARCHITECTS
6 HUTTON CENTRE DR. SUITE 1150
SANTA ANA, CA 92707
T 949.809.3380 WWW.SVA-ARCHITECTS.COM

THIS DOCUMENT CONTAINS INFORMATION PROPRIETARY TO SVA ARCHITECTS INC. AND IS FURNISHED IN CONFIDENCE FOR THE LIMITED PURPOSE OF EVALUATION, BIDDING OR REVIEW. THIS DOCUMENT OR ITS CONTENTS MAY NOT BE USED FOR ANY OTHER PURPOSE AND MAY NOT BE REPRODUCED OR DISCLOSED TO OTHERS WITHOUT THE PRIOR WRITTEN CONSENT OF SVA ARCHITECTS INC. ALL RIGHTS RESERVED, © COPYRIGHT 2018.

REGISTERED PROFESSIONAL ENGINEER — RICHARD J. KOURETAS — No. M31713 — Exp. 6/30/2025 — CIVIL — STATE OF CALIFORNIA

REVISIONS

NO.	DESCRIPTION	DATE	APPROVED
1	90% CD SUBMITTAL	12/15/2022	
2	100% CD SUBMITTAL	05/01/2023	
3	FINAL SUBMITTAL	06/30/2023	

B.M.: THE CITY OF GARDENA BENCHMARK NO. SD-15
ELEV. = 43.508'

CITY OF GARDENA
DEPARTMENT OF PUBLIC WORKS - ENGINEERING

MECHANICAL DETAILS

COMMUNITY AQUATICS & SENIOR CENTER
M5.02

	INITIAL	DATE
DESIGNED BY		05/25/2022
DRAWN BY		06/20/23
CHECKED BY		06/29/23

APPROVED BY:
APPROVED BY: DIRECTOR OF PUBLIC WORKS
SHT. 122 OF 195 DWG. NO. 5-2606

PLOT DATE: 7/20/2023 8:45:11 PM
FILE NAME: M5.02

CanFab — Cannon Fabrication Inc (Page 3 of 3)

CANNON FABRICATION INC
182 GRANITE STREET, SUITE 101, CORONA, CA 92879
PHONE: (951)278-1830 FAX: (951)278-8444 www.canfab.com canfab@canfab.com

FOR: GROUP B ISO

PART NO: SEE BELOW

STRUCTURAL REVIEW BY: MARTIN & associates — JOHN A. MARTIN AND ASSOCIATES

REGISTERED PROFESSIONAL ENGINEER GREGORY LOUIS OROZCO No. 4957 STRUCTURAL STATE OF CALIFORNIA 12/7/2018

TABLE 3 ALLOWABLE CURB AND UNIT DIMENSION AND WEIGHT

RELATED CURBS	LCURB [IN]	WCURB [IN]	HCURB [IN]	WTCURB [LBS]	LUNIT [IN]	WUNIT [IN]	HUNIT [IN]	WTUNIT [LBS]	CG.LONG [IN]	CG.SHORT [IN]	CG.HEIGHT [IN]
1008 1008–XIC	SEE PAGE 1	SEE PAGE 1	MIN 8	MIN 405,408	88.125	59.5	47	MAX 2028 FOR 1008 MAX 2186 FOR 1008–XIC	53.875	9.125	23.75
			11	438, 441							
			14	474, 477							
			18	519, 522							
			24	662, 665							
			MAX 36	MAX 828,831							
3012	SEE PAGE 1	SEE PAGE 1	MIN 8	MIN 406	89	59	50.75	MAX 1589	49.75	35.5	HUNIT/2
			11	438							
			14	469							
			18	510							
			24	647							
			MAX 36	MAX 801							
4028S	SEE PAGE 1	SEE PAGE 1	MIN 8	MIN 327	98.25	47	46.875	MAX 1316	47	22	HUNIT/2
			11	359							
			14	391							
			18	433							
			24	574							
			MAX 36	MAX 733							
6042	SEE PAGE 1	SEE PAGE 1	MIN 8	MIN 442	88.625	53.25	46.875	MAX 1565	49	24	HUNIT/2
			11	474							
			14	505							
			18	547							
			24	687							
			MAX 36	MAX 845							
6042S	SEE PAGE 1	SEE PAGE 1	MIN 8	MIN 473	99.688	63.188	50.875	MAX 1916	54	27	HUNIT/2
			11	507							
			14	540							
			18	584							
			24	733							
			MAX 36	MAX 899							

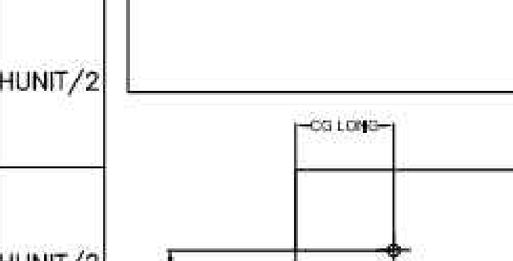

TABLE 4 TABULATED CURB AND ANCHORAGE INFORMATION PER VARYING HEIGHT

		0 < H ≤ 18"	18" < H ≤ 22"	22" < H ≤ 30"	30" < H ≤ 36"
A	CURB THICKNESS	14 GA	14 GA	12 GA	12 GA
B	EXP. ANCHOR	8	8	10	10
C	EXP. ANCHOR	6	6	8	8
D	WELD	18"	18"	18"	18"
E	SCREWS	36	38	38	40
F	SCREWS	24	24	24	24
G	DISTANCE	MAX 0.75"	MAX 0.75"	MAX 0.75"	MAX 0.75"
H	NO. OF CLIPS	10	10	10	10
I	CLIP SMS	(4) #14	(4) #14	(4) #14	(4) #14
J	CLIP SMS	(8) #14	(8) #14	(8) #14	(8) #14
K	ISO RAIL	10 GA 7.5" DEEP X 1" FLANGES			
L	NO. OF ISOLATORS	8 FOR 3012 AND 4028S, 10 FOR 1008, 6042 AND 6042S & 11 FOR 1008 XIC			
M	NO. OF STIFFENERS	8 FOR 3012 AND 4028S, 10 FOR 1008, 6042 AND 6042S & 11 FOR 1008 XIC			

PROJECT: IBC 2018/ CBC 2019 UPDATE DATE: 11.30.18

ENGINEER: LD DISTRIBUTOR:

DRAWING NUMBER: GROUP_B_ISO.DWG PAGE 3 OF 3

CanFab — Cannon Fabrication Inc (Page 2 of 3)

CANNON FABRICATION INC
182 GRANITE STREET, SUITE 101, CORONA, CA 92879
PHONE: (951)278-1830 FAX: (951)278-8444 www.canfab.com canfab@canfab.com

FOR: GROUP B ISO

PART NO: SEE BELOW

STRUCTURAL REVIEW BY: MARTIN & associates

REGISTERED PROFESSIONAL ENGINEER GREGORY LOUIS OROZCO No. 4957 STRUCTURAL STATE OF CALIFORNIA 12/7/2018

HOLD DOWN DETAIL

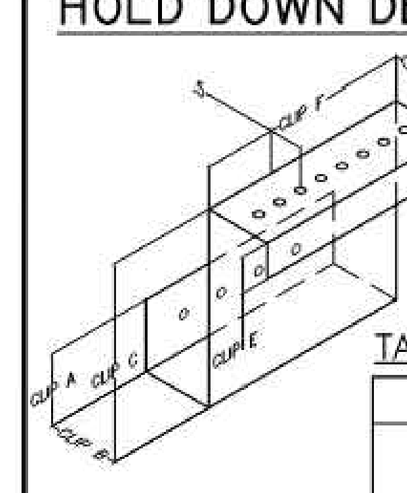

NOTE:
SEE TABLE 1 FOR DESIGNATED HOLD DOWN CLIP PER CURB

TABLE 1 HOLD DOWN CLIP PER CURB

CURB	CLIP	GAUGE	CLIP A [IN]	CLIP B [IN]	CLIP C [IN]	CLIP D [IN]	CLIP E [IN]	CLIP F [IN]
1008 1008–XIC	1909–SHD8–12	12 GA	1.5	2.625	4.5625	1.875	1.0	9.0
3012	3901–SHD8–12	12 GA	1.0	4.81	3.875	2.125	1.0	9.0
4028S	4901–SHD8–12	12 GA	2.0	3.0625	4.625	1.875	1.0	9.0
6042	6907–SHD8–12	12 GA	2.0	2.0	3.25	1.875	1.0	9.0
6042S	6907–SHD8–12	12 GA	2.0	2.0	3.25	1.875	1.0	9.0

ALTERNATIVE HOLD DOWN DETAIL

NOTE:
APPLICABLE ONLY FOR 9" LONG HOLD DOWN WITH (8) SCREWS AT TOP AND (4) SCREWS AT BOT EQUALLY SPACED

1. INFORMATION SHOWN ON THE STAMPED CANFAB CURB DRAWING IS THE MINIMUM REQUIREMENTS FOR THE CURB CONSTRUCTION AND INSTALLATION. NO STRUCTURAL OBJECTION TO THE USE OF LARGER SIZE SCREWS AND THICKER GAUGE SHEET METAL THAN THE INFORMATION SHOWN ON THE STAMPED CANFAB CURB DRAWING.
2. NO STRUCTURAL OBJECTION TO SHIFTING THE ATTACHMENT CLIPS ALONG THE CURB. FIRST AND LAST CLIP IN THE SERIES OF CLIPS SHALL BE LOCATED PER CLIP LOCATION DETAIL PER STAMPED CANFAB CURB DRAWING. DISTANCE SHIFTED SHALL NOT BE LARGER THAN THE LENGTH OF THE CLIP.
3. NO STRUCTURAL OBJECTION TO CUTTING THE ATTACHMENT CLIPS PER REQUIREMENTS AS SHOWN ON BELOW SKETCH.

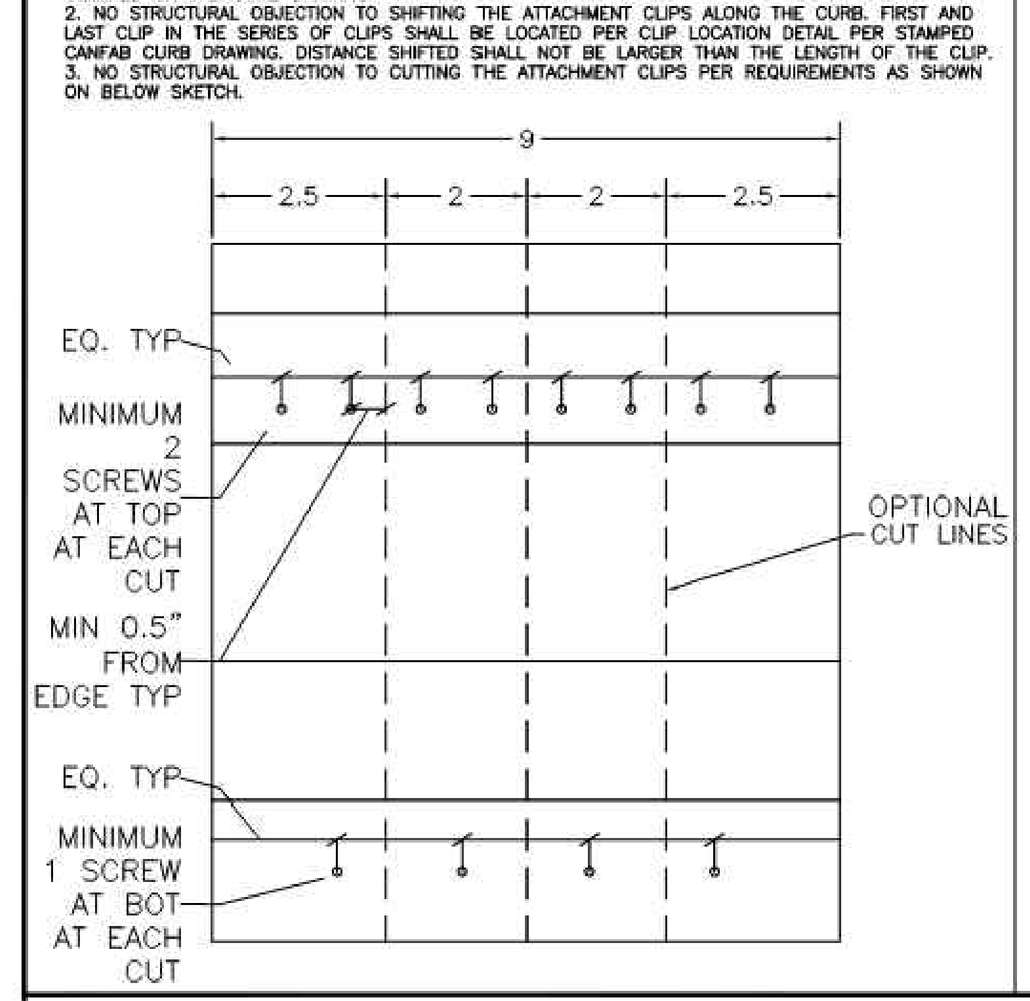

CLIP LOCATION DETAIL

NOTE:
SEE TABLE 2 FOR CLIP LOCATION

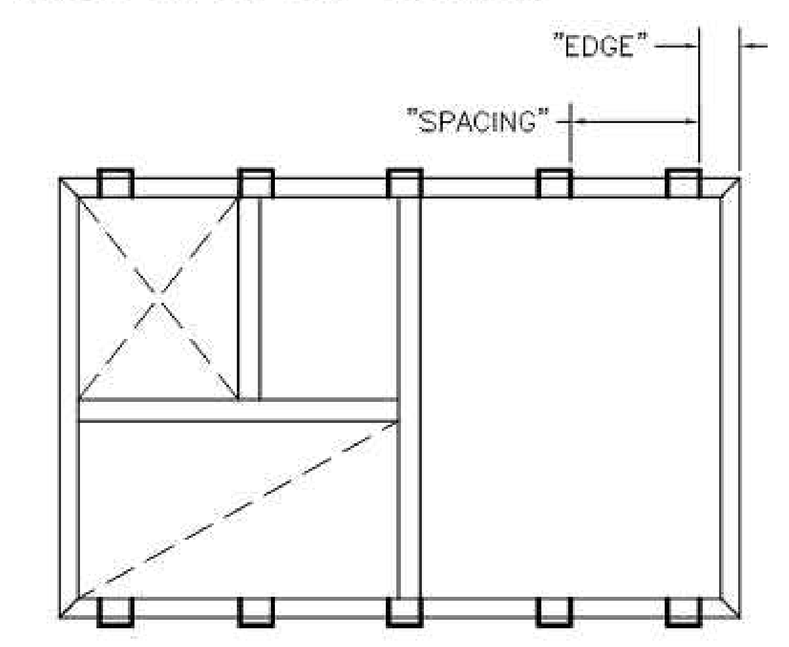

TABLE 2 CLIP LOCATION

CURB	EDGE [IN]	SPACING [IN]
1008, 1008–XIC	7.75	16.56
3012	7.75	13.09
4028S	7.75	25.70
6042	7.75	17.125
6042S	7.75	17.125

PROJECT: IBC 2018/ CBC 2019 UPDATE DATE: 11.30.18

ENGINEER: LD DISTRIBUTOR:

DRAWING NUMBER: GROUP_B_ISO.DWG PAGE 2 OF 3

CanFab — Cannon Fabrication Inc (Page 1 of 3)

CANNON FABRICATION INC
182 GRANITE STREET, SUITE 101, CORONA, CA 92879
PHONE: (951)278-1830 FAX: (951)278-8444 www.canfab.com canfab@canfab.com

FOR: GROUP B ISO
TRANE PRECEDENT 4 - 10 TONS
THC 047E-72E, 048F-102F, TSC 072E-120E, 072F-120F, YHC 047E-72E, 048F-102F, YSC 048F-120F, 072E-120E, WSC 060E-90E, TZC 048E-60E, 048F-60F, YZC 048E-60E, 048F-60F, WHC 048-060H, 074-102H, WSC 060-072H, GWSC 060H, GERE 072-090

PART NO: 6042–IC

DIM A	DIM B	DIM C	DIM D	DIM E	DIM F	DIM G	DIM H
VARIES MAX 36" SEE TABLE 3	46.375"	80.5"	18.5"	8.625"	18.5"	34.375"	34.375"

NOTE: DIMENSIONS B & C ARE FROM I.D. OF CURB

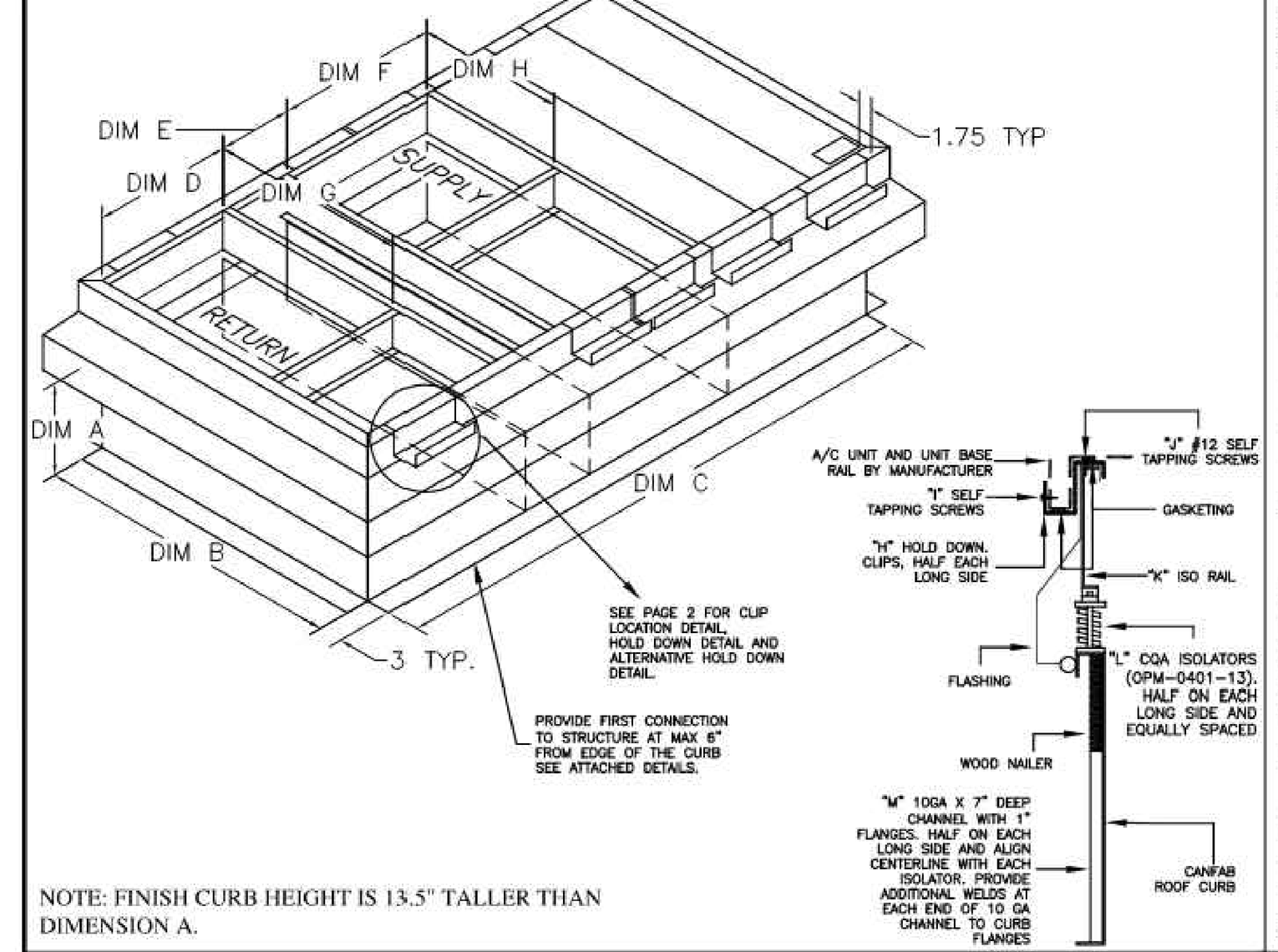

NOTE: FINISH CURB HEIGHT IS 13.5" TALLER THAN DIMENSION A.

ALL WORK SHALL CONFORM TO THE STANDARD OF 2018 INTERNATIONAL BUILDING CODE & 2019 CALIFORNIA BUILDING CODE.

SEISMIC DESIGN CRITERIA
–SDS = 1.5 ap = 2.5
–I = 1.5 Rp = 2.0

WIND DESIGN CRITERIA
–MAX 60 FT TALL BUILDING
–EXPOSURE C
–175 MPH, 3 SECOND GUST WIND

NOTE:
INSTALLER TO VERIFY WITH A LICENSED STRUCTURAL ENGINEER IN THE CORRESPONDING STATE THE ADEQUACY OF THE STRUCTURE FOR LOADS IMPOSED BY THE UNIT AND THE CURB IN ADDITION TO ALL OTHER LOADS.
–INSTALLER TO VERIFY WITH A LICENSED STRUCTURAL ENGINEER IN THE CORRESPONDING STATE THAT THE SEISMIC AND WIND DESIGN CRITERIA NOTED ON THIS DRAWING ARE ADEQUATE FOR THE SITE SPECIFIC VALUES. OTHERWISE, CONTACT CANNON FABRICATION FOR A SITE SPECIFIC ANALYSIS AND DRAWINGS.

CURB CONSTRUCTION
1) ■ WELDED
2) ■ BOLTED
3) ■ FINGERLOCK
–ALL WELDING CONSTRUCTION CERTIFIED TO ANSI/AWS D1.3 STRUCTURAL WELDING CODE–SHEET METAL
–SELF–DRILLING SCREW SHALL MEET ASTM C1513 SPECIFICATION AND INSTALLED PER AISI–S100
–NO GAP IS ALLOWED BETWEEN TWO METAL SHEET SURFACES WHERE SHEET METAL SCREW IS CONNECTED

CURB AND UNIT INFORMATION
"A" GAUGE GALVANIZED STEEL CURB
–SEE TABLE 3 FOR ALLOWABLE CURB AND UNIT DIMENSIONAL AND WEIGHT
–SEE TABLE 4 FOR TABULATED CURB AND ANCHORAGE INFORMATION PER VARYING CURB HEIGHT
– ALPHA DESIGNATIONS "A" THRU "M", CAN BE FOUND ON TABLE 4, PAGE 3

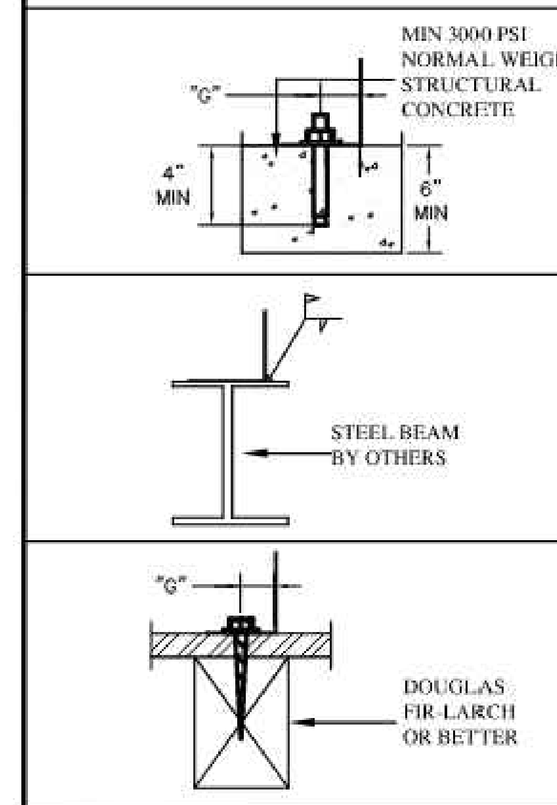

ATTACHMENT TO STRUCTURAL CONCRETE
"B" 5/8" HILTI KWIK BOLT TZ SS 304, HALF EACH LONG SIDE.
"C" 5/8" HILTI KWIK BOLT TZ SS 304, HALF EACH SHORT SIDE.
NOTE:
–MIN 5" AWAY FROM THE NEAREST CONCRETE EDGE (INSTALL PER ICC–ES ESR–1917).
–STRUCTURALLY ACCEPTABLE TO SUBSTITUTE HILTI KBTZ STAINLESS STEEL BOLTS WITH HILTI KBTZ CARBON STEEL BOLTS ONLY IF ALL THE BOLTS ARE COMPLETELY WATERPROOFED AND PROTECTED AGAINST THE WEATHER.
–BOLTS SHALL BE EQUALLY SPACED

ATTACHMENT TO STRUCTURAL STEEL
1/8" FILLET WELD, 2" LONG, "D" ON CENTER.
NOTE:
–PROVIDE MIN 2 CONNECTIONS WHERE THE CURB SIDE IS SHORTER THAN THE WELD SPACING.
–PROVIDE WELDS ON ALL SIDES

ATTACHMENT TO WOOD
"E" 3/8"x4" LAG SCREWS, HALF EACH LONG SIDE.
"F" 3/8"x4" LAG SCREWS, HALF EACH SHORT SIDE.
NOTE:
–SCREWS SHALL BE EQUALLY SPACED.

STRUCTURAL REVIEW BY: MARTIN & associates

REGISTERED PROFESSIONAL ENGINEER GREGORY LOUIS OROZCO No. 4957 STRUCTURAL STATE OF CALIFORNIA 12/7/2018

PROJECT: IBC 2018/ CBC 2019 UPDATE DATE: 11.30.18

ENGINEER: LD DISTRIBUTOR:

DRAWING NUMBER: GROUP_B_ISO.DWG PAGE 1 OF 3

FACTORY VIBRATION ISOLATION CURB FOR TRANE RTU (4 TO 6 TON) — SCALE NONE — 5

Make-Up Air Unit on Roof Support Detail

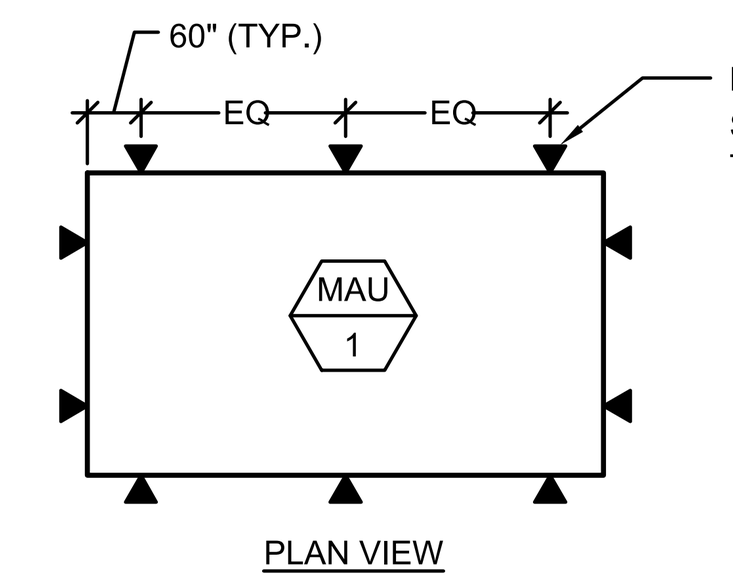

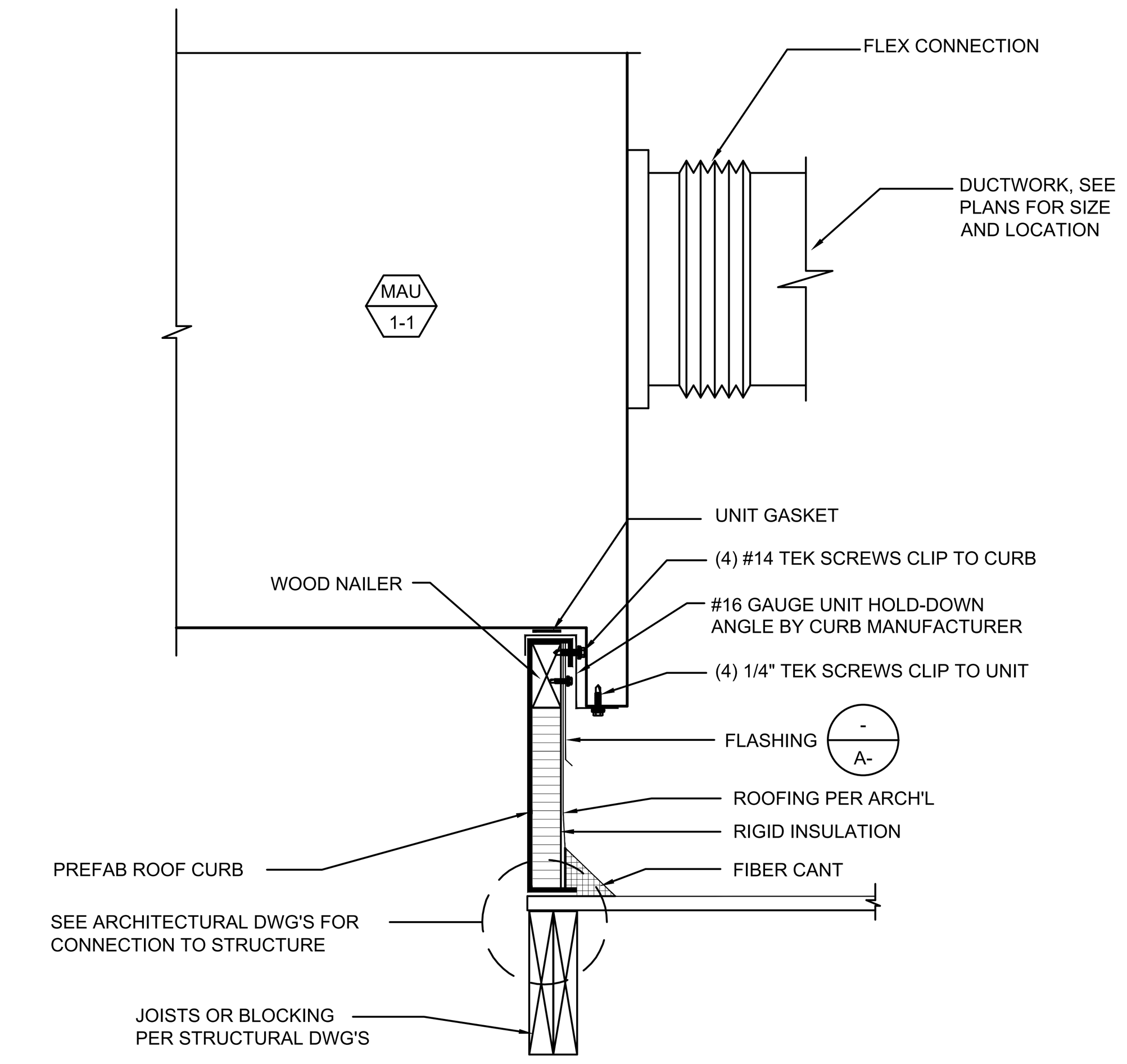

NOTES:
1. FILL ENTIRE VOID SPACE IN ROOF CURB WITH BATT INSULATION.

MAKE-UP AIR UNIT ON ROOF SUPPORT DETAIL — SCALE NONE — 3

Rooftop Packaged Unit Mounting Detail

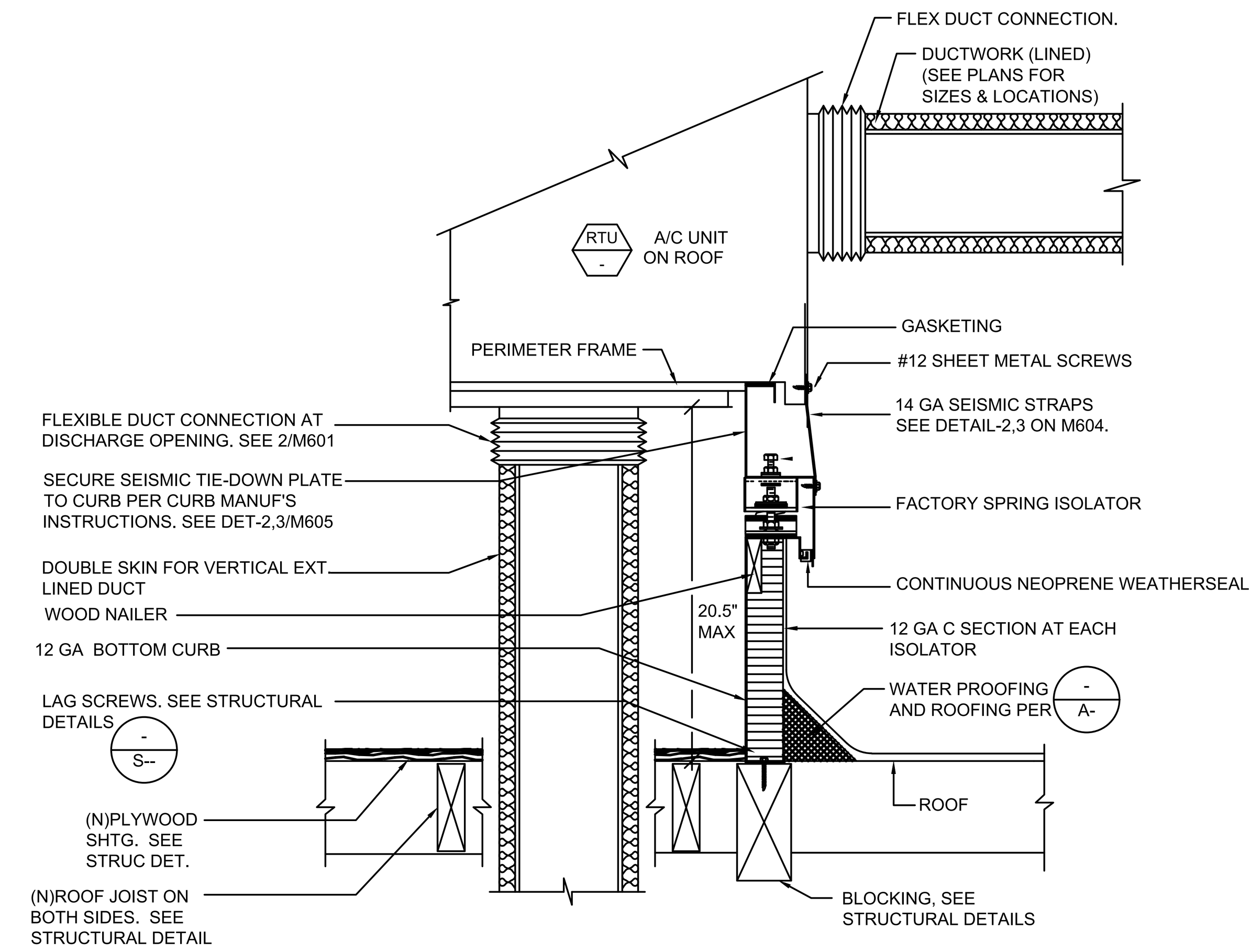

NOTES:
1. COORDINATE WITH STRUCTURAL ROOF FRAMING PLAN.

ROOFTOP PACKAGED UNIT MOUNTING DETAIL — SCALE NONE — 2

Manufacture Roof Curb for Make-Up Air Unit MAU-1-1

TRANE — Job Name: Gardena Aquatic and Community Senior Center — CSAA Quantity: 1 Tags: CSAA-MAU

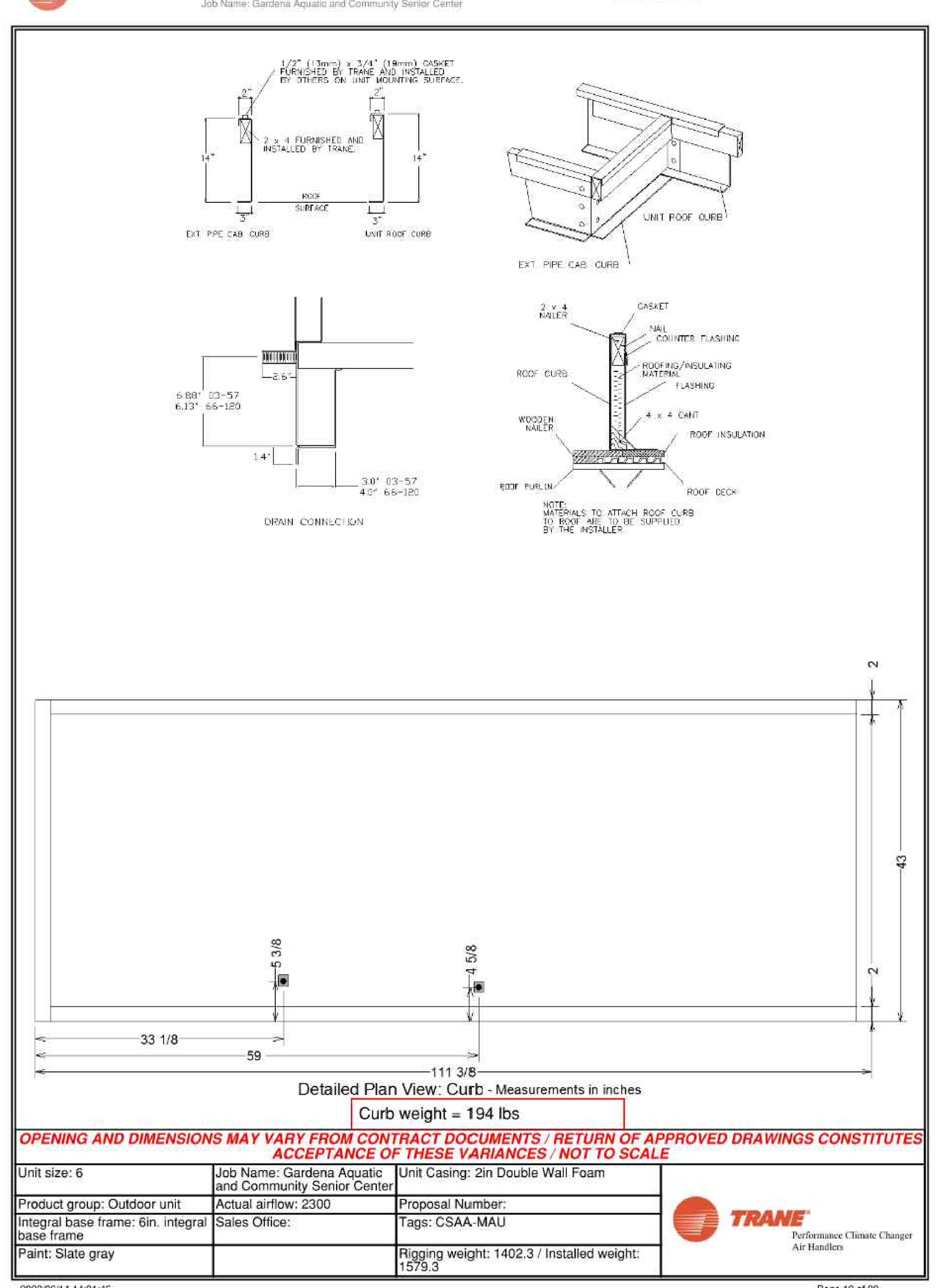

Detailed Plan View: Curb - Measurements in inches

Curb weight = 194 lbs

OPENING AND DIMENSIONS MAY VARY FROM CONTRACT DOCUMENTS / RETURN OF APPROVED DRAWINGS CONSTITUTES ACCEPTANCE OF THESE VARIANCES / NOT TO SCALE

Unit size: 6	Job Name: Gardena Aquatic and Community Senior Center	Unit Casing: 2in Double Wall Foam	TRANE Performance Climate Changer Air Handlers
Product group: Outdoor unit	Actual airflow: 2300	Proposal Number:	
Integral base frame: 6in. integral base frame	Sales Office:	Tags: CSAA-MAU	
Paint: Slate gray		Rigging weight: 1402.3 / Installed weight: 1579.3	

2022/06/14 14:31:46
Product Version: 1
Page 12 of 22

MANUFACTURE ROOF CURB FOR MAKE-UP AIR UNIT MAU-1-1 — SCALE NONE — 6

Duct Up Thru Roof Detail

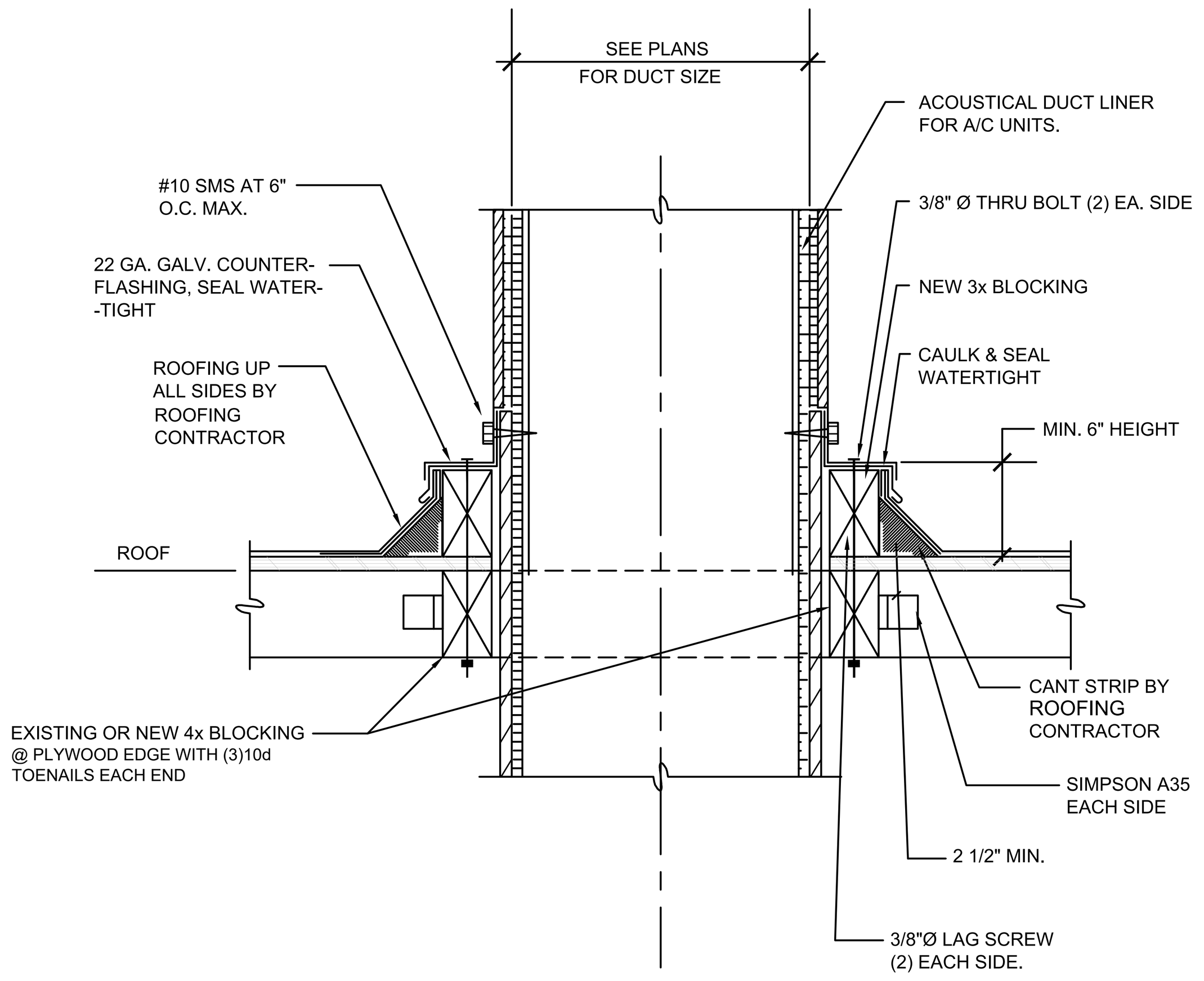

NOTES:
1. FOR ALL EXPOSED METAL, PROVIDE STAINLESS STEEL, HOT DIP GALVANIZED OR OTHER CODE APPROVED CORRISON RESISTANT COATING.
2. ALL FASTENERS SHALL BE STAINLESS STEEL, HOT DIP GALVANIZED OR OTHER CODE APPROVED CORRISON RESISTANT COATING.

DUCT UP THRU ROOF DETAIL — SCALE NONE — 4

Inline Exhaust Fan Mounting Detail

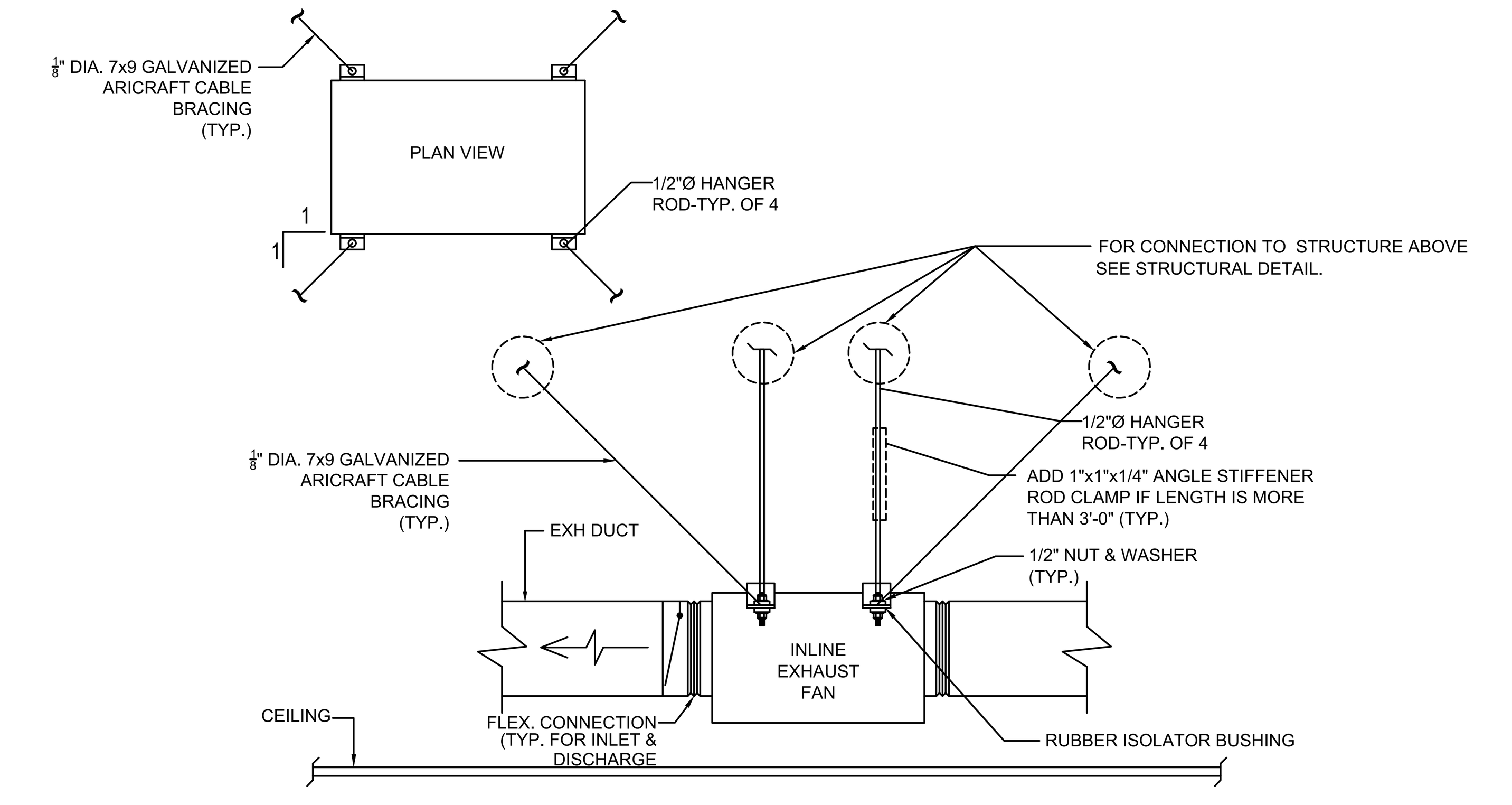

INLINE EXHAUST FAN MOUNTING DETAIL — SCALE NONE — 1

ALFATECH
421 EAST HUNTINGTON DRIVE
MONROVIA, CA 91016
PHONE: (213) 212-9860
www.atce.com

PREPARED BY:
SVA ARCHITECTS
6 HUTTON CENTRE DR, SUITE 1150
SANTA ANA, CA 92707
T 949.809.3380 WWW.SVA-ARCHITECTS.COM

THIS DOCUMENT CONTAINS INFORMATION PROPRIETARY TO SVA ARCHITECTS INC. AND IS FURNISHED IN CONFIDENCE FOR THE LIMITED PURPOSE OF EVALUATION, BIDDING OR REVIEW. THIS DOCUMENT OR ITS CONTENTS MAY NOT BE USED FOR ANY OTHER PURPOSE AND MAY NOT BE REPRODUCED OR DISCLOSED TO OTHERS WITHOUT THE PRIOR WRITTEN CONSENT OF SVA ARCHITECTS INC. ALL RIGHTS RESERVED, © COPYRIGHT 2018.

REGISTERED PROFESSIONAL ENGINEER NIKOLAOS J. KOURAKIS No. M31713 Exp. 6/30/2025 MECHANICAL STATE OF CALIFORNIA

REVISIONS

NO.	DESCRIPTION	DATE	APPROVED
1	90% CD SUBMITTAL	12/15/2022	
2	100% CD SUBMITTAL	05/01/2023	
3	FINAL SUBMITTAL	06/30/2023	

B.M.: THE CITY OF GARDENA BENCHMARK NO. 5D-15 ELEV. = 43.508'

CITY OF GARDENA
DEPARTMENT OF PUBLIC WORKS - ENGINEERING
MECHANICAL DETAILS
COMMUNITY AQUATICS & SENIOR CENTER
M5.03

	INITIAL	DATE
DESIGNED BY		05/25/2022
DRAWN BY		06/20/23
CHECKED BY		06/29/23

APPROVED BY:
APPROVED BY: DIRECTOR OF PUBLIC WORKS

SHT. 123 OF 195 DWG. NO. 5-2606

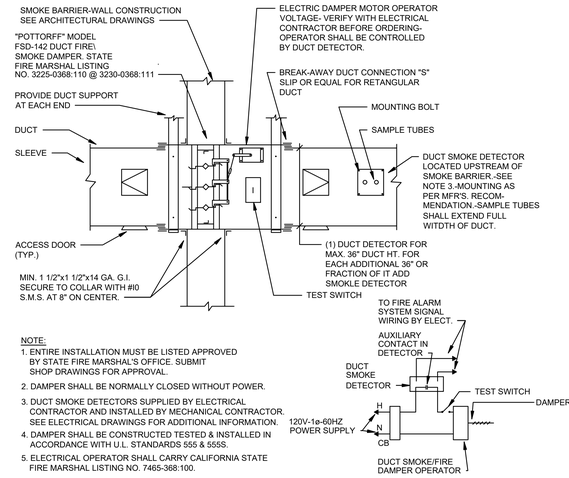

-	SCALE NONE	9

COMBINATION SMOKE FIRE DAMPER DETAIL | SCALE NONE | 3

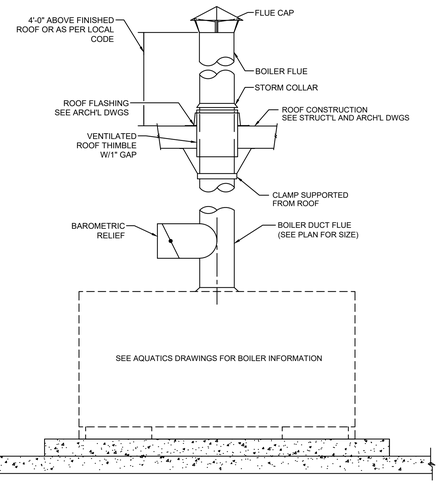

-	SCALE NONE	8

BOILER DUCT FLUE DETAIL | SCALE NONE | 5

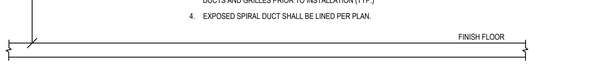

NOTES:
1. CONTRACTOR SHALL INSTALL/TRANSITION MAIN DUCTWORK TIGHT TO UNDERSIDE OF STRUCTURAL MEMBERS SO AS TO MAINTAIN A BOTTOM OF DUCT AS HIGH AS POSSIBLE AND ALL AROUND BOTTOM OF DUCT NO LOWER THAN 9'-8" (IF ANY DISCREPANCIES NOTIFY ARCHITECT/ENGINEER).
2. ALL LOW PRESSURE DUCTWORK FROM OUTLET OF THE FC TO DIFFUSERS SHALL BE SPIRAL DUCTWORKS, UNLESS NOTED OTHERWISE.
3. CONTRACTOR TO OBTAIN APPROVAL FROM ARCHITECT THE FINAL ELEVATION OF EXPOSED DUCTS AND GRILLES PRIOR TO INSTALLATION (TYP.)
4. EXPOSED SPIRAL DUCT SHALL BE LINED PER PLAN.

-	SCALE NONE	7

ACCESS DOOR DETAIL | SCALE NONE | 1

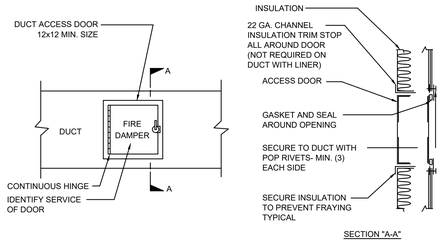

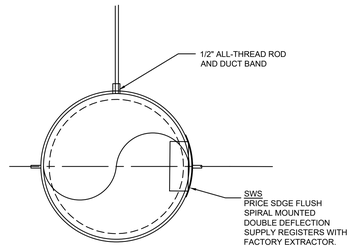

-	SCALE NONE	7

REGISTER ON EXPOSED ROUND DUCT DETAIL | SCALE NONE | 1

ALFATECH
421 EAST HUNTINGTON DRIVE
MONROVIA, CA 91016
PHONE: (213) 212-9860
www.atce.com

PREPARED BY:

6 HUTTON CENTRE DR. SUITE 1150
SANTA ANA, CA 92707
T 949.809.3380 WWW.SVA-ARCHITECTS.COM

THIS DOCUMENT CONTAINS INFORMATION PROPRIETARY TO SVA ARCHITECTS INC. AND IS FURNISHED IN CONFIDENCE FOR THE LIMITED PURPOSE OF EVALUATION, BIDDING OR REVIEW. THIS DOCUMENT OR ITS CONTENTS MAY NOT BE USED FOR ANY OTHER PURPOSE AND MAY NOT BE REPRODUCED OR DISCLOSED TO OTHERS WITHOUT THE PRIOR WRITTEN CONSENT OF SVA ARCHITECTS INC. ALL RIGHTS RESERVED. © COPYRIGHT 2018.

ARCHITECTS

REGISTERED PROFESSIONAL ENGINEER — JOSE J. ROJAS — No. M31713 Exp. 6/30/2025 — MECHANICAL — STATE OF CALIFORNIA

B.M.: THE CITY OF GARDENA BENCHMARK NO. SD-15 ELEV. = 43.508'

REVISIONS

NO.	DESCRIPTION	DATE	APPROVED
1	90% CD SUBMITTAL	12/15/2022	
2	100% CD SUBMITTAL	05/01/2023	
3	FINAL SUBMITTAL	06/30/2023	

	INITIAL	DATE
DESIGNED BY		06/25/2022
DRAWN BY		06/20/23
CHECKED BY		06/29/23

CITY OF GARDENA
DEPARTMENT OF PUBLIC WORKS - ENGINEERING

MECHANICAL DETAILS

COMMUNITY AQUATICS & SENIOR CENTER
M5.04

APPROVED BY:

APPROVED BY: DIRECTOR OF PUBLIC WORKS

SHT. 124 OF 195 DWG. NO. 5-2606

PLOT DATE: 6/30/2023 3:04:17 PM

ROOF TOP HEAT PUMP PACKAGED UNIT SCHEDULE

TAG	MANUFACTURER		AREA SERVED	TONS	ELECTRICAL FOR RTU				ELECTRICAL FOR POWER EXHAUST (P.E)							ECONOMIZER	SUPPLY FAN		MIN OSA CFM	COOLING CAPACITY				EVAPORATOR COIL				HEATING (HEAT PUMP)			WEIGHT (LBS)				MOUNT'G DETAIL	REMARKS
	MAKE	MODEL			POWER	HP	MCA	MOCP	MAKE, MODEL & TYPE	ESP IN.WC.	MOTOR HP	MOTOR FLA	MOTOR MCA	MOTOR MOCP	POWER	MAKE & MODEL	CFM	EXTRNAL SP IN.WG.		TOTAL (MBH)	SENSIBLE (MBH)	EER/IEER	SEER	EDB (°F)	EWB (°F)	LDB (°F)	LWB (°F)	INPUT (MBH)	OUTPUT (MBH)	EFF % (COP)	RTU	CURB	P.E/ECON	TOTAL		
RTU 1-1	TRANE	WHC074H4R0A	FIRST FLOOR	6	460V-3Ø-60HZ	2.75	19.0	25.0	CANFAB MODEL 6144-PE/MPE	0.50	0.75	1.5	1.875	3.375	460V-3Ø-60	CANFAB MODEL 6144-PE/MPE	2400	1.2	480	75.83	56.37	12.1	15.5	80.0	67.0	55.73	55.64	-	73.65	-	829	687	331	1940 (11)	-/M	(1)(2)(3)(4)(5)(6)(7)(8)
RTU 1-2	TRANE	WHC048H4R0A	FIRST FLOOR	4	460V-3Ø-60HZ	1.5	11.0	15.00	-	-	-	-	-	-	-	FACTORY PROVIDED ECONOMIZER	1600	1.2	300	46.52	36.86	13.0	16.5	80.0	67.0	57.20	57.12	-	43.66	-	679	687	N/A	1435 (11)	-/M	(1)(2)(4)(8)(9)
RTU 2-1	TRANE	WHC048H4R0A	SECOND FLOOR	4	460V-3Ø-60HZ	1.5	11.0	15.0	-	-	-	-	-	-	-	CANFAB MODEL SUB-6141-HEC	1600	1.2	385	46.73	37.07	13.0	16.5	80.0	67.0	57.20	57.12	-	43.58	-	679	687	220	1950 (11)	-/M	(1)(2)(8)(9)(10)
RTU 2-2	TRANE	WHC048H4R0A	SECOND FLOOR	4	460V-3Ø-60HZ	1.5	11.0	15.0	-	-	-	-	-	-	-	CANFAB MODEL SUB-6141-HEC	1600	1.2	385	46.73	37.07	13.0	16.5	80.0	67.0	57.20	57.12	-	43.58	-	679	687	220	1950 (11)	-/M	(1)(2)(8)(9)(10)
RTU 2-3	TRANE	WHC048H4R0A	SECOND FLOOR	4	460V-3Ø-60HZ	1.5	11.0	15.0	-	-	-	-	-	-	-	CANFAB MODEL SUB-6141-HEC	1600	1.2	385	46.73	37.07	13.0	16.5	80.0	67.0	57.20	57.12	-	43.58	-	679	687	220	1950 (11)	-/M	(1)(2)(8)(9)(10)
RTU 2-4	TRANE	WHC060H4R0A	SECOND FLOOR	5	460V-3Ø-60HZ	1.5	12.0	15.0	CANFAB MODEL 6142-PE/MPE	0.50	0.75	1.5	1.875	3.375	460V-3Ø-60	CANFAB MODEL 6142-PE/MPE	2000	1.2	400	58.61	46.64	13.0	16.4	80.0	67.0	57.26	57.17	-	56.60	-	678	687	331	1780 (11)	-/M	(1)(2)(3)(4)(5)(6)(8)
RTU 2-5	TRANE	WHC048H4R0A	SECOND FLOOR	4	460V-3Ø-60HZ	1.5	11.0	15.00	-	-	-	-	-	-	-	FACTORY PROVIDED ECONOMIZER	1600	1.2	380	46.52	36.86	13.0	16.5	80.0	67.0	57.20	57.12	-	43.66	-	679	687	N/A	1435 (11)	-/M	(1)(2)(4)(8)(9)

REMARKS
(1) PROVIDE FACTORY VIBRATION ISOLATION CURB.
(2) PROVIDE MERV 13 FILTER WITH FACTORY INSTALLED CONTROLLER TIED TO RTU.
(3) PROVIDE 0-100% FULLY MODULATING ECONOMIZER AND INTEGRAL POWER EXHAUST WITH DRY-BULB INTEGRATED CONTROL. PROVIDE DUAL, SEPARATE POWER TO UNIT AND POWER EXHAUST. PROVIDE CARBON DIOXIDE (CO2) SENSOR FOR DCV CONTROL.
(4) VERTICAL SUPPLY AND RETURN DUCT DISCHARGE
(5) PROVIDE DUCT SMOKE DETECTOR ON SA DUCT PER FIRE ALARM DRAWINGS.
(6) PROVIDE SEPARATE POWER FOR POWER EXHAUST.
(7) PROVIDE FAULT DETECTION DIAGNOSTICS PER T-24 120.2(I).
(8) PROGRAMMABLE THERMOSTAT TIED TO RTU. PROVIDE ALL NECESSARY CONTROLS, EQUIPMENT, PROGRAMMING, WIRING AND CONDUITS FOR CONNECTION EXISTING EMS.
(9) PROVIDE 0-100% FULLY MODULATING ECONOMIZER WITH DRY-BULB INTEGRATED CONTROL AND BUILT IN RELIEF DAMPER.
(10) HORIZONTAL SUPPLY & RETURN DUCT DISCHARGE.
(11) ADDED 5% ON THE UNIT WIGHT FOR OTHER MANUFACTURER CAN BID ON THE PROJECT.

SPLIT SYSTEM AIR CONDITIONER SCHEDULE - INDOOR UNIT

SYMBOL	MANUFACTURER AND MODEL NO.	ROOM SERVED	AIRFLOW CFM	MIN OSA CFM	REFRIGERATION		ELECTRICAL				OPERATING WEIGHT (LBS.)	ACOUSTIC DATA (dBA)	ANCHORAGE DETAIL	REMARKS
					AMBIENT DB- °F.	LVG. AIR DB °F.	FLA	MCA	MCOP	V-Ø-HZ				
FC 1-1	MITSUBISHI HIGH WALL DUCTLESS MODEL TPKA0A0121LA00A	BATTERY RM	360	-	101	51.8	(1)	(1)	(1)	208V-1Ø-60HZ	28.0	48.0	-/M-	(1)(2)(8)
FC 1-2	MITSUBISHI HIGH WALL DUCTLESS MODEL TPKA0A0181LA00A	ELEV. CONTROL RM	450	-	101	56.9	(1)	(1)	(1)	208V-1Ø-60HZ	28.0	48.0	-/M-	(1)(2)(8)
FC 1-3	MITSUBISHI HIGH WALL DUCTLESS MODEL TPKA0A0121LA00A	LIFEGUARD	360	30	101	51.8	(1)	(1)	(1)	208V-1Ø-60HZ	28.0	48.0	-/M-	(1)(2)(8)

SPLIT SYSTEM AIR CONDITIONER SCHEDULE - OUTDOOR UNIT

SYMBOL	MANUFACTURER AND MODEL NO.	UNIT SERVED	COOLING		HEATING		IEER	EER	ELECTRICAL			REFRIGERANT LINES		OPERATING WEIGHT (LBS.)	ACOUSTIC DATA (dBA)	ANCHORAGE DETAIL	REMARKS
			TOTAL (BTUH)	SENS. (BTUH)	TOTAL (BTUH)	HSPF			MCA	MOCP	V-Ø-HZ	SUCTION	LIQUID				
CU 1-1	MITSUBISHI CONDENSING UNIT MODEL TRUZA0121KA70NA	FC 1-1	12,000	10,560	14,000	10.2	21.1	13.3	11.0	28	208/230V-1Ø-60HZ	1/2	1/4	93	46.0	-/M-	(1)(2)(3)(4)
CU 1-2	MITSUBISHI CONDENSING UNIT MODEL TRUZA0181KA70NA	FC 1-2	18,000	13,140	19,000	11.2	19.8	10.7	11.0	28	208/230V-1Ø-60HZ	1/2	1/4	100	46.0	-/M-	(1)(2)(3)(4)
CU 1-3	MITSUBISHI CONDENSING UNIT MODEL TRUZA0121KA70NA	FC 1-3	12,000	10,560	14,000	10.2	21.1	13.3	11.0	28	208/230V-1Ø-60HZ	1/2	1/4	93	46.0	-/M-	(1)(2)(3)(4)

(1) POWER TO BE SUB FED FROM OUTDOOR CONDENSING UNIT.
(2) COMPLETE WITH MOUNTING BRACKETS, CLEANABLE FILTERS (2)9x12, WALL MOUNTED REMOTE CONTROLLER AND MAXIBLUE CONDENSATE PUMP (120V-1). POWERED FROM FAN COIL UNIT. PROVIDE SAFETY SWITCH.
(3) GROSS COOLING CAPACITY BASED ON 101° F TEMPERATURE OF AIR ENTERING CONDENSER.
(4) SIZE RL & RS LINES PER MANUFACTURER'S RECOMMENDATION BASE ON TOTAL DEVELOPED LENGTH. BOTH REFRIGERANT PIPING SHALL BE INSULATED.

AIR DISTRIBUTION SCHEDULE

TAG	TYPE	CFM	NECK SIZE	FACE SIZE / LENGTH	MAX S.P.	OPPOSED BLADE DAMPER (Y/N)	MATERIAL	FINISH	MANUFACTURER / DESCRIPTION	MODEL	IMAGE	ACCESSORIES / CONFIGURATION
SD-1	SUPPLY / EXHAUST	0-250 251-330	16x6 20x8	18x8 22x10	0.1	Y	ALUMINUM	WHITE	NAILOR	51DHC		SPIRAL DUCT-MOUNTED SUPPLY, DOUBLE DEFLECTION, FRONT LONG BLADE, W/ AIR SCOOP DAMPER, CONCEALED SCREW
RD-1	SUPPLY	0-90 91-200 201-300 301-450 451-600	6"ø 8"ø 10"ø 12"ø 14"ø	11 1/8"ø 14 3/4"ø 18 1/4"ø 22"ø 26"ø	0.1	Y	ALUMINUM	WHITE	NAILOR	RNR		CEILING DIFFUSER ROUND LOUVERED FACE "DROPPED CONE"
CD-2 / CR-2 / EG-1	SUPPLY / RETURN / EXHAUST	0-90 91-200 201-300 301-450 451-600 601-700	6"ø 8"ø 10"ø 12"ø 14"ø 16"ø	12x12 18x18 24x24 24x24 24x24 24x24	0.1	Y	ALUMINUM	WHITE	NAILOR	UNI 2		CEILING DIFFUSER SQUARE PLAQUE
CD-1	SUPPLY	0-90 91-200 201-300 301-400 401-500 501-600	6"ø 8"ø 10"ø 12"ø 14"ø 16"ø	24x24 24x24 24x24 24x24 24x24 24x24	0.1	N	ALUMINUM	WHITE	NAILOR	4320M		CEILING DIFFUSER PERFORATED FACE, MODULAR CORE
SWS-1	SIDEWALL SUPPLY / EXHAUST	0-250 251-330	16x6 20x8	18x8 22x10	0.1	Y	ALUMINUM	WHITE	NAILOR	51DH	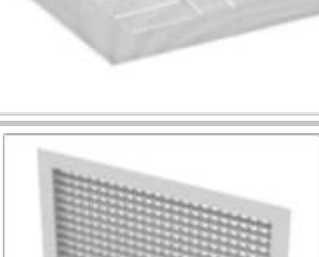	SUPPLY REGISTER DOUBLE DEFLECTION 3/4" BLADE SPACING, FRONT LONG BLADE
DL-1	SUPPLY	0-350	18x6	19x7	0.1	N	ALUMINUM	WHITE	NAILOR	45DLC1		LONG THROW, HIGH CAPACITY SPLIT VANE SUPPLY GRILLE WITH ROTATING DRUM
CR-1	RETURN / EXHAUST	0-90 0-90 91-200 201-300 301-450 451-600 601-750 751-1150 1151-1600	6"ø 6"ø 8"ø 10"ø 12"ø 14"ø 16"ø 18x18 22x22	12x12 24x24 24x24 24x24 24x24 24x24 24x24 24x24 24x24	0.1	N	ALUMINUM	WHITE	NAILOR	4360	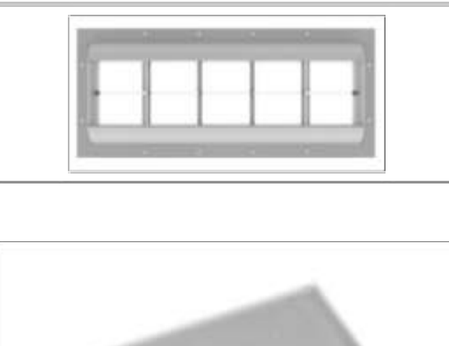	RETURN OR EXHAUST GRILLE PERFORATED FACE
SWR-1	RETURN / EXHAUST	0-400 401-600 601-800 801-1000 1001-1500 1501-2000	12x12 18x12 24x12 30x12 30x16 34x20	14x14 20x14 26x14 32x14 32x18 36x22	0.1	Y	ALUMINUM	WHITE	NAILOR	5145H		RETURN OR EXHAUST REGISTER 35 DEG. FIXED DEFLECTION 3/4" BLADE SPACING, FRONT LONG BLADE
LD-1	LINEAR SLOT SUPPLY	0-160 161-210 211-250	8"ø 10"ø 12"ø	48 48 60	0.1	N	ALUMINUM	WHITE	NAILOR	5015		LINEAR DIFFUSER 1 x 1.5" SLOT HIGH/JET THROW WITH INSULATED PLENUM
LR-1	LINEAR SLOT RETURN	0-160 161-240	8"ø 10"ø	48	0.1	N	ALUMINUM	WHITE	NAILOR	5015		LINEAR RETURN 1 x 1.5" SLOT WITH RETURN HOOD/LIGHT SHIELD

NOTES:
1. SEE ARCHITECTURAL PLANS FOR CEILING TYPE. PROVIDE LAY-IN TYPE BORDER FOR ACOUSTICAL TILE CEILINGS AND SURFACE MOUNT BORDER FOR GYPSUM BOARD AND OTHER TYPES OF CEILING OR WALLS.
2. PROVIDE 24x24 MODULE FOR STANDARD LAY-IN CEILINGS. PROVIDE 12x12 MODULE FOR SMALL ROOMS WHERE 24x24 GRID LOCATIONS ARE NOT AVAILABLE.
3. INCREASE NECK SIZE 2" FOR 2 AND 3 WAY BLOW APPLICATIONS.
4. DIFFUSER AND REGISTER COLOR AND FINISH SHALL BE SELECTED BY THE ARCHITECT. WHITE LISTED AS STANDARD.
5. PROVIDE SQUARE TO ROUND TRANSITION FOR RETURN, EXHAUST AND TRANSFER GRILLES WHERE THEY ARE CONNECTED WITH FLEXIBLE DUCTWORK.
6. PROVIDE SECTIONING BAFFLES FOR 1,2, AND 3 WAY BLOW APPLICATIONS.
7. FOR FIRE RATED CEILING, PROVIDE DIFFUSER WITH MANUFACTURER'S FIRE RATED OPTION.
8. FOR CEILING MOUNTED RETURN/EXHAUST GRILLES, PROVIDE MINIMUM 3" PLENUM BEHIND GRILLE.
9. ALL DIFFUSERS SHALL BE SELECTED AT MAX. NC-25.

MAKE-UP AIR UNIT SCHEDULE

SYMBOL	MANUFACTURER & MODEL NO.	AREA SERVED	LOCATION	BMS INTERLOCK WITH	SUPPLY AIR BLOWER								HEATING FURNACE				FILTER	AREA SMOKE DETECTOR SHUT DOWN	OPER. WEIGHT (LBS.)	ANCHORAGE DETAIL REFERENCE	REMARKS
					CFM	TSP ("WG)	BHP	RPM	MOTOR HP	MOTOR VOLTAGE	MOTOR MCA	MOTOR MOP	INPUT MBH	OUTPUT MBH	GAS CONN	EFF					
MAU 1-1	TRANE CSAA006	RESTROOM	ROOF	EF 1-4	2300	2.176	1.27	-	1.5	460-3-60	2.75	15.0	120	95	RIGHT	80%	- -	YES	1622 (4)	-/- -/-	(1)(2)(3)

REMARKS
(1) TWO STAGE GAS VALVE.
(2) ROOF CURB ARE BY MANUFACTURE. VERIFY SLOPE OF ROOF WITH ARCHITECTURAL ROOF PLANS.
(3) THIS BUILDING HAS TOTAL AREA COVERAGE FOR SMOKE DETECTION. SEE FIRE ALARM DRAWINGS FOR CONTROL RELAYS TO SHUT DOWN HVAC UNITS.
(4) INCLUDED MANUFACTURE ROOF CURB'S WEIGHT.

FAN SCHEDULE

SYMBOL	MANUFACTURER AND MODEL NO.	SERVICE	LOCATION	BLOWER			MOTOR				SONES	OPERATING WEIGHT LBS	SUPPORT DETAIL	ACCESSORIES	REMARKS
				CFM	SP IN. WC.	RPM	HP	RPM	POWER V-PH-HZ	DRIVE					
EF-1-1	GREENHECK SQ-97-VG	KITCHEN	CEILING	300	0.25	1641	1/4	1725	115-1-60	DIRECT	15.3	50	-	(2)	
EF-1-2	GREENHECK SP-AP0511W	ELEC. RM	CEILING	110	0.25	861	11 WATTS	-	115-1-60	DIRECT	0.8	10	-	(2)	
EF-1-3	GREENHECK SP-AP0511W	BATTERY RM	CEILING	75	0.25	831	11 WATTS	-	115-1-60	DIRECT	0.8	10	-	(2)	
EF-1-4	GREENHECK G-140-VG	RESTROOMS -	ROOF	2500	1.0	1678	1	1725	115-1-60	DIRECT	16.5	78	-	(1)	(1)(2)(3)(4)
EF-2-1	GREENHECK G-098-VG	RESTROOMS -	ROOF	650	0.5	1615	1/4	1725	115-1-60	DIRECT	10.3	49	-	(1)	(1)(2)(3)(4)
EF-3-1	GREENHECK G-097-VG	POOL BLDG CHEMICAL 304	ROOF	100	0.25	861	1/4	1725	115-1-60	DIRECT	2.7	49	-	(1)	(1)(2)(3)(4)
EF-3-2	GREENHECK G-097-VG	POOL BLDG CHEMICAL 305	ROOF	100	0.25	861	1/4	1725	115-1-60	DIRECT	2.7	49	-	(1)	(1)(2)(3)(4)

ACCESSORIES:
(1) VARI GREEN EC MOTOR WITH 0-10 VDC INPUT SIGNAL TO VARY FAN SPEED AND BALANCING DIAL. (2) BACKDRAFT DAMPER.
(3) PRE-FAB ALUMINUM SOUND ATTENUATOR ROOF CURB. (4) BIRD SCREEN.

REMARKS: (1) FAN SELECTED FOR 10% MORE THAN BALANCE CFM.

ALFATECH
421 EAST HUNTINGTON DRIVE
MONROVIA, CA 91016
PHONE: (213) 212-9860
www.atce.com

PREPARED BY:
SVA ARCHITECTS
6 HUTTON CENTRE DR, SUITE 1150
SANTA ANA, CA 92707
T 949.809.3380 WWW.SVA-ARCHITECTS.COM

THIS DOCUMENT CONTAINS INFORMATION PROPRIETARY TO SVA ARCHITECTS INC. AND IS FURNISHED IN CONFIDENCE FOR THE LIMITED PURPOSE OF EVALUATION, BIDDING OR REVIEW. THIS DOCUMENT OR ITS CONTENTS MAY NOT BE USED FOR ANY OTHER PURPOSE AND MAY NOT BE REPRODUCED OR DISCLOSED TO OTHERS WITHOUT THE PRIOR WRITTEN CONSENT OF SVA ARCHITECTS INC. ALL RIGHTS RESERVED, © COPYRIGHT 2018.

REGISTERED PROFESSIONAL ENGINEER NIKOLAOS J. KOURABASIS No. M31713 Exp. 6/30/2025 MECHANICAL STATE OF CALIFORNIA

REVISIONS

NO.	DESCRIPTION	DATE	APPROVED
1	90% CD SUBMITTAL	12/15/2022	
2	100% CD SUBMITTAL	05/01/2023	
3	FINAL SUBMITTAL	06/30/2023	

B.M.: THE CITY OF GARDENA BENCHMARK NO. 5D-15 ELEV. = 43.508'

CITY OF GARDENA
DEPARTMENT OF PUBLIC WORKS - ENGINEERING
MECHANICAL SCHEDULES
COMMUNITY AQUATICS & SENIOR CENTER
M6.01

	INITIAL	DATE
DESIGNED BY		05/25/2022
DRAWN BY		06/20/23
CHECKED BY		06/29/23

APPROVED BY:
APPROVED BY: DIRECTOR OF PUBLIC WORKS

FILE PATH:
PLOT TIME: 5/20/2022 5:04:11 PM

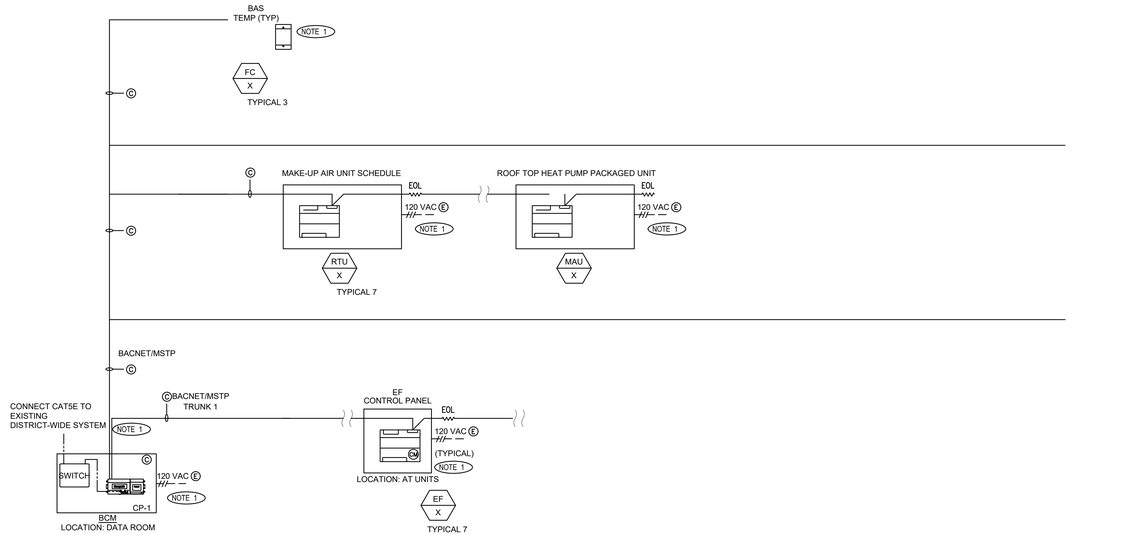

CONTROL SYSTEM OVERALL VIEW

COMMUNICATION RISER

NOTES:

1. ALL 120VAC POWER PROVIDED BY DIV26 ELECTRICAL.
2. RUN NEW BACNET MSTP CABLE BASED ON FIELD DETERMINED BEST DAISY-CHAIN RUN.

LEGEND:

(E) = PROVIDED BY ELECTRICAL CONTRACTOR
(M) = PROVIDED BY MECHANICAL CONTRACTOR
(C) = PROVIDED BY CONTROLS CONTRACTOR
(CM) = FURNISHED BY CONTROLS CONTRACTOR /INSTALLED BY MECH. CONTRACTOR
———— LOW VOLTAGE DC WIRING
– – – – – – – LINE VOLTAGE AC WIRING

CONTROLS SYSTEM ARCHITECTURE | SCALE NONE | 5

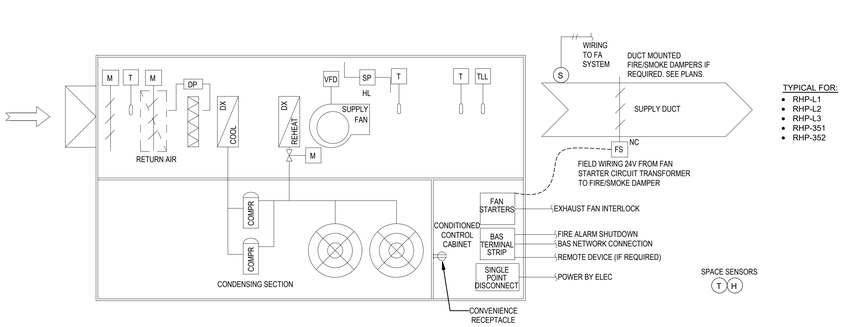

GENERAL NOTES:

- THIS DIAGRAM REPRESENTS INTERNAL CONTROL POINTS FOR COMMON MANUFACTURERS EQUIPMENT OFFERINGS. THE DIAGRAMS ARE TO SHOW INTENT AND EXPECTED LEVEL OF QUALITY/OPERATION.
- CONTROL FOR THE PACKAGED UNIT SHALL BE PROVIDED BY THE EQUIPMENT MANUFACTURER, AND SET UP BY THE MANUFACTURER'S REPRESENTATIVE. FIELD MOUNTED UNIT CONTROLS ARE NOT ACCEPTABLE SINCE ITS DX.
- THE BAS CONTRACTOR SHALL BE RESPONSIBLE FOR STANDARD POINTS OF CONNECTION TO THE BUILDING BAS NETWORK.
- THE BAS CONTRACTOR SHALL BE RESPONSIBLE FOR WIRING REMOTE DEVICES INCLUDING TEMP SENSORS, DP SENSORS, ETC.
- THE BAS CONTRACTOR SHALL HELP WITH THE UNIT SETUP AND PROGRAMMING RELATED TO INPUT/OUTPUT VALUES FOR TEMPERATURES, ALARMS, AND TIME OF DAY SCHEDULES.
- IF A SMOKE DAMPER OR FIRE-SMOKE DAMPER IS REQUIRED THEN THE SMOKE DAMPER ACTUATOR POWER SHALL ORIGINATE IN THE UNIT'S CONTROL CABINET AND WIRED TO AUX CONTACTS. THE SMOKE DAMPER ACTUATOR WILL BE PROVIDED BY MECHANICAL TO BE 24V SPRING CLOSED. WHEN THE UNIT IS ON, CONTROL POWER FROM THE (FAN) CONTROL CIRCUITS SHALL PROVIDE POWER TO OPEN THE DAMPER WHEN THE UNIT IS ON. WHEN THE UNIT IS OFF, CONTROL POWER WILL BE OFF, SO THE SPRING IN THE SMOKE DAMPER ACTUATOR SHALL CLOSE AUTOMATICALLY. THE COMMISSIONING FIELD TEST WILL BE TO HAVE THE FIRE-SMOKE DAMPER CLOSE WHEN THE UNIT IS MANUALLY TURNED OFF.

SEQUENCE OF OPERATION:

A. THE UNIT WILL BE ENERGIZED TO OCCUPIED MODE BY TIME OF DAY PROGRAMMING VIA MANUFACTURER'S PROGRAMMABLE THERMOSTAT. WHEN ENERGIZED, MANUFACTURER'S INTEGRAL CONTROLLER SHALL CONTROL ALL UNIT'S FANS, COMPRESSORS, HOT GAS VALVES AND AUXILIARIES TO MAINTAIN COOLING AND HEATING SET POINTS.
B. DURING OCCUPIED PERIODS, WHEN ENERGIZED, THE FAN SHALL RUN CONTINUOUSLY.
C. DURING UNOCCUPIED PERIODS, THE FAN WILL CYCLE WITH A CALL FOR HEATING OR COOLING TO MAINTAIN UNOCCUPIED SET POINTS.
D. CONTROL POINTS FOR MFR.'S CONTROLLER:
   1. UNIT STATUS - ON/OFF/MODE.
   2. UNIT ALARM.
   3. DIRTY FILTER ALARM.
   4. OUTSIDE AIR TEMPERATURE.
   5. SPACE TEMPERATURE.
   6. SPACE TEMPERATURE SET POINT.
   7. SPACE HUMIDITY SET POINT.
E. COOLING CONTROL: WHEN SPACE CONDITIONS INDICATE TEMPERATURE ABOVE SET POINT OF 72° F (ADJUSTABLE), ENERGIZE COOLING MODE.
F. MFR.'S INTEGRAL CONTROLS OPERATES REFRIGERANT SYSTEMS TO MAINTAIN SPACE TEMPERATURE SET POINT. UPON SATISFYING SPACE TEMPERATURE SETPOINT, THE UNIT'S FAN VFD SHALL MODULATE THE FAN SPEED TO PREVENT OVERCOOLING OF THE SPACE.
G. FOR SYSTEMS WITH HOT GAS REHEAT COILS, MODULATE REHEAT BASED UPON SPACE HUMIDITY WHILE CONTROLLING COOLING TO SPACE TEMPERATURE SET POINT.
H. FOR SYSTEMS WITHOUT HOT GAS REHEAT, CYCLE FAN ON AND OFF WITH FULL COMPRESSOR CAPACITY WITHOUT FAN OFF TIME DELAY RELAYS.
I. HEATING CONTROL: WHEN SPACE CONDITIONS INDICATE AN AIR TEMPERATURE BELOW HEATING SET POINT OF 68° F (ADJUSTABLE), ENERGIZE HEATING MODE.
J. MFR.'S INTEGRAL CONTROLS OPERATES HEATING CONTROLS TO MAINTAIN SPACE TEMPERATURE SET POINT.
K. OUTSIDE AIR VENTILATION: THE INTEGRAL CONTROLS SHALL MODULATE THE OA DAMPER TO MAINTAIN MINIMUM REQUIRED OUTDOOR AIR. THIS IS TO BE ACHIEVED EITHER BY AN AIRFLOW MEASURING STATION OR BY DP ACROSS THE OA DAMPER. THE OA DAMPER SHALL MODULATE BETWEEN THE SETPOINTS OF THE DP AT THE SUPPLY FANS' MAXIMUM AND MINIMUM FLOWS.
L. FILTERS: PROVIDE DIRTY FILTER SWITCH FOR EACH FILTER SECTION WITH DIRTY FILTER ALARM.

BASIC FEATURES OF PACKAGED DX UNIT

- FILTER DP SWITCH OR SENSOR
- OA DAMPER, NORMALLY CLOSED
- FAN STATIC PRESSURE HIGH LIMIT SWITCH
- HIGH AND LOW TEMPERATURE LIMIT SETPOINTS AND ALARMS
- INTEGRAL CONTROLS CABINET SECTION
- INTEGRAL MICROPROCESSOR CONTROLLER & LOGIC
- SINGLE POINT POWER CONNECTION
- INLET AND DISCHARGE RAIN HOODS
- IMPACT RESISTANCE LABEL

- FIRE ALARM SHUTDOWN DIGITAL INPUT
- SUPPLY AIR TEMP CONTROL, DEWPOINT CONTROL/DEHUM MODE

DX PACKAGE ROOFTOP UNIT SCHEMATIC - HEAT PUMP VAV | SCALE NONE | 4

(NOT USED) | SCALE NONE | 3

BMS POINTS SUMMARY TABLE FOR EXHAUST FANS			
POINT ID ☐	POINT DESCRIPTION	BMS TYPE(S)	ADDITIONAL PARAMETERS
1	EF START/STOP	AO	WITH ECM MOTOR (0-10VDC)
2	EF RUN STATUS	BI	
3	EF START/STOP	BO	
4	EF RUN STATUS	BI	

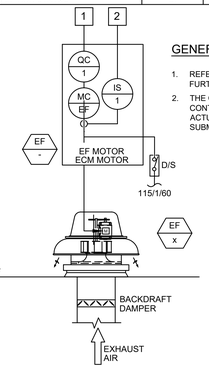

GENERAL NOTES

1. REFER TO MECHANICAL EQUIPMENT SCHEDULES FOR FURTHER DETAILS AND EQUIPMENT QUANTITIES.
2. THE CONTROL DIAGRAM IS USED TO SHOW THE CONTROL POINTS AND SHALL NOT BE USED FOR ACTUAL EQUIPMENT LAYOUT. REFER TO MECHANICAL SUBMITTALS FOR ACTUAL EQUIPMENT CONFIGURATION.

EXHAUST FAN CONTROL DIAGRAM | SCALE NONE | 2

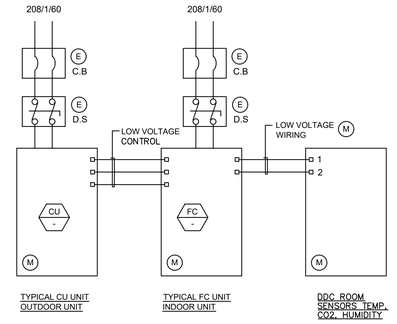

TYPICAL CU UNIT
OUTDOOR UNIT

TYPICAL FC UNIT
INDOOR UNIT

DDC ROOM
SENSORS TEMP,
CO2, HUMIDITY

PROVIDE BMS CONTROLLER WITH
- SUPPLY TEMP SENSOR.
- CURRENT SENSOR.
- ENABLE-DISABLE, STATUS.
- VISUAL LOGIC DISPLAY CONTROLLER WITH TEMPERATURE
- SPACE TEMPERATURE ALARM.

TYPICAL FOR:
FC/CU-1
FC/CU-2
FC/CU-3
FC/CU-4
FC/CU-5

SPLIT SYSTEM WIRING AND CONTROL | SCALE NONE | 1

ALFATECH
421 EAST HUNTINGTON DRIVE
MONROVIA, CA 91016
PHONE: (213) 212-9560
www.atce.com

PREPARED BY:
SVA ARCHITECTS
6 HUTTON CENTRE DR, SUITE 1150
SANTA ANA, CA 92707
T 949.809.3380 WWW.SVA-ARCHITECTS.COM

THIS DOCUMENT CONTAINS INFORMATION PROPRIETARY TO SVA ARCHITECTS INC. AND IS FURNISHED IN CONFIDENCE FOR THE LIMITED PURPOSE OF EVALUATION, BIDDING OR CONSTRUCTION OF THE PROJECT AND SHALL NOT BE USED FOR ANY OTHER PURPOSE AND MAY NOT BE REPRODUCED OR DISCLOSED TO OTHERS WITHOUT THE PRIOR WRITTEN CONSENT OF SVA ARCHITECTS INC. ALL RIGHTS RESERVED, © COPYRIGHT 2018.

REGISTERED PROFESSIONAL ENGINEER — NICHOLAS J. KOUNTOURIS — No. M31713 — Exp. 6/30/2025 — MECHANICAL — STATE OF CALIFORNIA

REVISIONS

NO.	DESCRIPTION	DATE	APPROVED
1	90% CD SUBMITTAL	12/15/2022	
2	100% CD SUBMITTAL	05/01/2023	
3	FINAL SUBMITTAL	06/30/2023	

B.M.: THE CITY OF GARDENA BENCHMARK NO. SD-15
ELEV. = 43.508'

CITY OF GARDENA
DEPARTMENT OF PUBLIC WORKS - ENGINEERING
MECHANICAL CONTROLS DIAGRAMS
COMMUNITY AQUATICS & SENIOR CENTER
M7.01

	INITIAL	DATE	APPROVED BY:
DESIGNED BY		05/25/2022	
DRAWN BY		04/20/23	
CHECKED BY		04/27/23	
			APPROVED BY: DIRECTOR OF PUBLIC WORKS

SHT. 126 OF 195 DWG. NO. 5-2606

FILE PATH: E:\Projects\2021\21-11 Gardena Aquatics & Senior Center\Drawings\Mechanical\Controls\M7.01 Mechanical Controls Diagrams.dwg

BUILDING WATER CALCULATIONS

TABLE 1-BUILDING WATER SUPPLY

PROJECT:	Gardena Aquatics Center			
TYPE OF SYSTEM:	DOMESTIC	BLDG TYPE:	SLAB ON GRADE	
PIPE LOSSES ARE BASED ON:	SMOOTH	(CHART A-4) PIPE AND FITTINGS		
MAXIMUM CW DEMAND:	W.S.F.U./GPM 182 FU + 10+ 80+28		GPM	206.00
AVAILABLE PRESSURE (BLDG POC)	HIGH 82.0 PSI		LOW	65.00 PSI
LOSS THROUGH WATER METER	SIZE: (4" meter)	N/A	@ 206 GPM	3.6 PSI
LOSS THROUGH REDUCED PRESURE BACK FLOW PREVENTOR (IF APPLICABLE)	Zurn #500XL-YSBR (3" size)			10.0 PSI
BUILDING PRESSURE REGULATOR SET POINT (IF APPLICABLE)	Zurn #ZW209BP: 3" size			65.0 PSI
LOSS THROUGH PRESSURE REGULATOR				2.5 PSI
LOSS THROUGH SUB METER	SUBMETER SIZE OR MODEL			
FLOW:	GPM 0.00	FU	0.0	0.0 PSI
PRESSURE REQUIRED @ MOST REMOTE OR/AND HIGHEST FIXTURE WITH WORST SUPPLY CONDITION				30.00 PSI
STATIC LOSS:	10.0 ft	X	0.434	4.34 PSI
TOTAL LOSSES (FROM STREET TO BUILDING):				50.44 PSI
AVAILABLE PRESSURE FOR FRICTION LOSS (FROM LOW OR REGULATOR SET POINT)				14.56 PSI
TOTAL DEVELOPED LENGTH(ADD 15% EXTRA FOR FITTINGS &VALVES):	212.0 ft			42.4
AVAILABLE PRESSURE LOSS PER 100' =	14.6 PSI / 254.4 ft =		5.72	PSI/per 100'
BOOSTING NEEDED	NO	BOOSTER OUTLET SET POINT		0.0 PSI
ZONE PRESSURE REGULATOR SET POINT				0.0 PSI
ZONE LOSS THROUGH PRESSURE REGULATOR	REGULATOR SIZE & MODEL			0.0 PSI
ZONE LOSS THROUGH SUB METER	SUBMETER SIZE OR MODEL			
FLOW:	GPM 0.00	FU	0.0	0.0 PSI
ZONE PRESSURE REQUIRED @FIXTURE	FLUSH VALVE SYSTEM			0.0 PSI
ZONE STATIC LOSS (GAIN, if negative):	0.0 ft	X	0.434	0.0 PSI
TOTAL LOSS (AFTER BOOSTING):				0.00 PSI
ZONE AVAILABLE PRESSURE FOR FRICTION LOSS(ADD 15% EXTRA FOR FITTINGS &VALVES				0.00 PSI
ZONE TOTAL DEVELOPED LENGTH(ADD 15% EXTRA FOR FITTINGS &VALVES	0.0 ft			
ZONE AVAILABLE PRESSURE LOSS PER 100' =	0.0 PSI / 0.0 ft =		0.00	PSI/per 100'

TABLE 2-COLD WATER PIPE SIZING CRITERIA

PRESSURE LOSS	5.72	PSI per 100'	COPPER
MAXIMUM VELOCITY	6.00	ft/s	H-W Coef.: 140

	NPS PIPE SIZE(INCH)	ID(INCH)	GPM	FU(FT SYS.)	FU(FV SYS.)	VEL
TYPE L COPPER	1/2	0.545	2.7	2	-	3.7 ft/s
	3/4	0.785	7.0	7	-	4.6 ft/s
	1	1.025	14.1	18	-	5.5 ft/s
	1 1/4	1.265	23.5	39	7	6.0 ft/s
	1 1/2	1.505	33.3	78	25	6.0 ft/s
	2	1.985	57.8	254	132	6.0 ft/s
	2 1/2	2.465	89.2	455	329	6.0 ft/s
	3	2.945	127.3	719	666	6.0 ft/s
	4	3.905	223.9	1,668	1,668	6.0 ft/s
	6	5.845	501.5	-	-	6.0 ft/s
	8	7.725	876.1	-	-	6.0 ft/s

TABLE 3-HOT WATER PIPE SIZING CRITERIA

PRESSURE LOSS	5.72	PSI per 100'	COPPER
MAXIMUM VELOCITY	5.00	ft/s	H-W Coef.: 140

	PIPE SIZE(INCH)	ID(INCH)	GPM	FU(FT SYS.)	FU(FV SYS.)	VEL
TYPE L COPPER	1/2	0.545	2.7	2	-	3.7 ft/s
	3/4	0.785	7.0	7	-	4.6 ft/s
	1	1.025	12.9	16	-	5.0 ft/s
	1 1/4	1.265	19.6	28	-	5.0 ft/s
	1 1/2	1.505	27.7	46	-	5.0 ft/s
	2	1.985	48.2	119	-	5.0 ft/s
	2 1/2	2.465	74.3	245	-	5.0 ft/s
	3	2.945	106.1	406	-	5.0 ft/s
	4	3.905	186.5	840	-	5.0 ft/s
	6	5.845	417.9	-	-	5.0 ft/s
	8	7.725	730.0	-	-	5.0 ft/s

Notes:
- Flow, Head Loss, Velocity and Pressure Loss, calculated per Hazen-Williams Equation.
- Fixture Units and corresponding GPM conversion per LADBS document No. P/PC 2004-xx Public Information Bulletin

Fixture Unit Calculation Form

Project Name: Gardena Community & Senior Center
Created By: Marcia McKone
Date: 04-28-2023
Checked By: Mengyang Wu

Plumbing Fixture Unit Schedules

Descriptiopn	Quantity	Waste F.U	Water F.U	C.W F.U	H.W F.U	H.W. DEMAND (GPH)	Total Waste F.U	Total Water F.U	Total C.W F.U	Total H.W F.U	Possible max. Total H.W DEMAND (GPH)
Fixtures in Non-Residential Areas											
Lavatory	12	1	1	0.75	0.75	6	12	12	9	9	72
Urinals	8	2	4	1	0	0	16	32	8	0	0
Water Closet	15	4	5	5	0	0	60	75	75	0	0
Kitchen Sink	2	2	2	1.5	1.5	20	4	4	3	3	[illegible]
Dishwasher	1	3	3	0	3	40	3	3	0	3	
Refridgerator	2	0	0.5	0.5	0	0	0	1	1	0	40 40
Shower	12	2	2	1.5	1.5	30	24	24	18	18	0 360
Service Sink	3	3	3	2.25	2.25	20	9	9	6.75	6.75	
Drinking Fountain (Hi-Lo)	3	1	1	1	0	0	3	3	3	0	
Hose Bibb(1st one)	1	0	2.5	2.5	0	0	0	2.5	2.5	0	60 0
Hose Bibb	5	0	1	1	0	0	0	5	5	0	0 0
2" Floor Sink	2	4	0	0	0	0	8	0	0	0	
Indirect Waste Receptors	3	6	0	0	0	0	18	0	0	0	
Floor Drain (Emergency only)	15	0	0	0	0	0	0	0	0	0	0 0
Hub Drain	1	100	0	0	0	0	100	0	0	0	0 0
Coffee Maker	1	0.5	0.5	0.5	0	0	0.5	0.5	0.5	0	0
Ice Machine	1	0.5	0.5	0.5	0	0	0.5	0.5	0.5	0	0
1-Compartment Sink	1	2	2	1.5	1.5	30	2	2	1.5	1.5	30
Mechanical make-up water = 10 GPM											
Grand Totals							**260**	**173.5**	**133.75**	**41.25**	**602**
							Total Waste F.U	**Total Water F.U**	**Total C.W F.U**	**Total H.W F.U**	**Total H.W Possible max. DEMAND**
							Total Bldg Water Demand GPM =	**See Below**	**Use 0.4 as demand factor and 1.0 for storage factor: Heater capacity = 241 gph, storage tank = 300 Gal.**		

Descriptiopn	Quantity	Waste F.U	Water F.U	C.W F.U	H.W F.U	H.W. DEMAND (GPH)	Total Waste F.U	Total Water F.U	Total C.W F.U	Total H.W F.U	Possible max. Total H.W DEMAND (GPH)
Fixtures in Pool Equipment Bldg.											
Hose Bibb(1st one)	1	0	2.5	2.5	0	0	0	2.5	2.5	0	0
Hose Bibb	4	0	1	1	0	0	0	4	4	0	
3" Floor Sink	2	6	0	0	0	0	12	0	0	0	0
Floor Drain (Emergency only)	6	0	0	0	0	0	0	0	0	0	0 0
Emergency Eyewash/Shower	2	2	0	0	0	0	4	0	0	0	0 0
Hand Sink	1	3	2	2.25	2.25	0	3	2	2.25	2.25	0
Backwash Flush Tank (300 GPM)	1	600	0	0	0	0	600	0	0	0	0
Pool make-up water = 80 GPM											
Grand Totals							**619**	**8.5**	**6.5**	**0**	**0**
							Total Waste F.U	**Total Water F.U**	**Total C.W F.U**	**Total H.W F.U**	**Total H.W Possible max. DEMAND (GPH)**
							Total Bldg Water Demand GPM =	**182 + 80 + 10 +28 = 206 GPM**			

PLUMBING SYMBOLS

PLUMBING

- DOMESTIC COLD WATER
- DOMESTIC HOT WATER
- (E)PD — EXISTING PUMP DISCHARGE LINE
- SANITARY WASTE ABOVE FLOOR
- SANITARY WASTE BELOW FLOOR
- ----V---- VENT
- (E) EXISTING PIPE TO BE DEMO'D

VALVES & FITTINGS

- CO — CLEAN OUT
- WCO — WALL CLEAN OUT
- FCO — FLOOR CLEAN OUT
- GCO — GRADE CLEAN OUT (DOUBLE CLEAN OUT)
- FLOOR DRAIN / FLOOR SINK
- DOWNSPOUT NOZZLE
- WALL HYDRANT
- HOSE BIB
- ALIGNMENT GUIDE
- PIPE ANCHOR
- PIPE EXPANSION JOINT
- PIPE CAP
- PIPE UP
- PIPE DOWN
- PIPE TEE, UP
- PIPE TEE, DOWN
- UNION
- DIRECTION OF PIPE PITCH
- AQUASTAT
- WATER HAMMER ARRESTER
- BALL VALVE
- BUTTERFLY VALVE
- VALVE (GENERIC)
- CHECK VALVE
- CONCENTRIC REDUCER
- ECCENTRIC REDUCER
- FLEXIBLE CONNECTION
- FLOW DIRECTION
- SHUT OFF VALVE
- GATE
- GLOBE
- PLUG VALVE
- PRESSURE GAUGE
- SOLENOID VALVE
- ANGLE VALVE
- STRAINER
- PRESSURE AND TEMPERATURE TEST PORT
- THERMOMETER
- RELIEF VALVE

NOTE:

NOT ALL SYMBOLS AND ABBREVIATIONS LISTED ON THIS DRAWING MAY APPLY TO THE PROJECT.

DESCRIPTION

- YYY — FIXTURE NUMBER
- XXX/XX — EQUIPMENT DESIGNATION TAG
- DETAIL NUMBER
- SHEET NUMBER -(WHERE DETAIL IS SHOWN)
- KEYNOTES

ABBR.	DESCRIPTION	ABBR.	DESCRIPTION
ABBREV	ABBREVIATIONS	JS	JANITORS SINK
AD	ACCESS DOOR	LAV	LAVATORY
AFF	ABOVE FINISHED FLOOR	MFGR	MANUFACTURER
AP	ACCESS PANEL	(N)	NEW
BEL	BELOW	OTCS	OPEN TO CEILING SPACE
BFF	BELOW FINISHED FLOOR	PE	POLYETHYLENE
BOP	BOTTOM OF PIPE	PVC	POLYVINYLCHLORIDE
CFF	CAP FOR FUTURE	T&P	TEMPERATURE & PRESSURE
CI	CAST IRON	QTY	QUANTITY
CLG	CEILING	RD	ROOF DRAIN
CW	COLD WATER	REF	REFRIGERATOR
DIA.	DIAMETER	RPBP	REDUCED PRESSURE BACKFLOW PREVENTOR
DF	DRINKING FOUNTAIN	S	SANITARY SEWER
DFU	DRAINAGE FIXTURE UNIT	S.O.V.	SHUT-OFF VALVE
DWG	DRAWING	TYP.	TYPICAL
(E)	EXISTING	UNO	UNLESS NOTED OTHERWISE
EWC	ELECTRIC WATER COOLER	UR	URINAL
FCO	FLOOR CLEAN OUT	V	VENT
FD	FLOOR DRAIN	VBF	VENT BELOW FLOOR
FLR	FLOOR	VTR	VENT THRU ROOF
FW	FILTERED DOMESTIC COLD WATER	W	SANITARY WASTE
HS	HAND SINK	WABG	SANITARY WASTE ABOVE GRADE
HW	HOT WATER	WBEG	SANITARY WASTE BELOW GRADE
IAW	IN ACCORDANCE WITH	WC	WATER CLOSET
IJS	IN JOIST SPACE	WCO	WALL CLEAN OUT
I.E.	INVERT ELEVATION	WHA	WATER HAMMER ARRESTOR
IW	INDIRECT WASTE	WSFU	WATER SUPPLY FIXTURE UNIT

PLUMBING NOTES

A. PRIOR TO BID THE CONTRACTOR SHALL VERIFY THE EXACT LOCATIONS, ELEVATIONS, POINTS OF CONNECTIONS AND CHARACTERISTICS OF ALL UTILITY PIPING AND SHALL IMMEDIATELY NOTIFY THE ARCHITECT OF ANY DISCREPANCIES.

B. PROVIDE PIPING, EQUIPMENT, AND MATERIALS IN ACCORDANCE WITH APPLICABLE PLUMBING CODE REGULATIONS, STANDARDS, AUTHORITY HAVING JURISDICTION REQUIREMENTS AND AS OTHERWISE RECOMMENDED OR DIRECTED BY MANUFACTURERS.

C. COORDINATE INSTALLATION OF PIPING BELOW GRADE WITH STRUCTURAL COMPONENTS AND OTHER SYSTEM INSTALLATIONS.

D. COORDINATE INSTALLATION OF PIPING, FIXTURES, EQUIPMENT, ETC. WITH ARCHITECTURAL, STRUCTURAL, MECHANICAL AND ELECTRICAL PRIOR TO INSTALLATION.

E. CLEANOUTS SHALL BE PROVIDED AS REQUIRED BY CODE AND SHALL BE READILY ACCESSIBLE. THE CONTRACTOR SHALL COORDINATE ALL LOCATIONS WITH EQUIPMENT, CABINETS, ETC., WITH ARCHITECT PRIOR TO ANY INSTALLATION. ALL CLEANOUTS SHALL BE SIZED PER CODE.

F. SEE PLUMBING FIXTURE SCHEDULE FOR PIPE CONNECTION SIZES. PROVIDE LOOSE KEY STOPS TO ALL FIXTURES.

G. PROVIDE CEILING ACCESS PANELS FOR ALL VALVES LOCATED ABOVE INACCESSIBLE CEILING SYSTEMS. MAINTAIN FIRE RATINGS WHERE REQUIRED.

H. SEE ARCHITECTURAL DRAWINGS FOR EXACT FIXTURE LOCATIONS.

I. ALL SEWER / DRAINAGE PIPING BELOW GRADE SHALL BE SLOPED AT 2% (1/4" PER FOOT) UNO.

J. DO NOT RUN ANY PIPES OVER ANY ELECTRICAL PANEL OR SWITCHGEAR. NO PLUMBING WORK SHALL BE INSTALLED ABOVE ELECTRICAL SERVICE EQUIPMENT. COORDINATE PIPE LOCATIONS TO AVOID ELECTRICAL PANELS.

K. PROVIDE MANUFACTURER'S RECOMMENDED AND CODE REQUIRED CLEARANCES AROUND ALL PIECES OF EQUIPMENT. PIPING & CONDUIT SHALL NOT INTERFERE WITH REQUIRED ACCESS.

L. EQUIPMENT LAYOUT IS BASED ON EQUIPMENT LISTED IN EQUIPMENT SCHEDULES. ANY OTHER EQUIPMENT USED IS SUBJECT TO MEETING PERFORMANCE REQUIREMENTS OF LISTED EQUIPMENT. CONTRACTOR SHALL MAKE ALL NECESSARY ADJUSTMENTS TO ASSURE OTHER EQUIPMENT WILL FIT IN AVAILABLE SPACE AND WILL NOT EXCEED WEIGHT AND ELECTRICAL REQUIREMENTS.

M. CLEANOUTS SHALL BE FLUSH WITH FINISHED FLOOR AT SEALED CONCRETE / TILE.

N. REFER TO STRUCTURAL DRAWINGS FOR ALLOWABLE METHODS/LOADS FOR HANGING PIPING FROM STRUCTURAL MEMBERS.

O. ANCHORAGE DETAILS FOR EQUIPMENT ARE SUBJECT TO APPROVAL OF THE STRUCTURAL ENGINEER PRIOR TO INSTALLATION AND INSPECTION. UNLESS SPECIFICALLY SHOWN ON THESE PLANS. NO STRUCTURAL MEMBER SHALL BE CUT, DRILLED NOR NOTCHED WITHOUT PRIOR WRITTEN AUTHORIZATION FROM THE STRUCTURAL ENGINEER.

P. SEAL ALL PIPE PENETRATIONS OF WALLS WITH AIRTIGHT SEALANT (FIRE RATED SYSTEM AT RATED WALLS). REFER TO ARCHITECTURAL DRAWINGS FOR RATED WALL LOCATIONS.

Q. EACH PLUMBING VENT SHALL TERMINATE NOT LESS THAN TEN (10) FEET FROM TO THREE (3) FEET ABOVE ANY WINDOW, DOOR, AIR INTAKE, OR VENT SHAFT, AND SHALL HAVE A VANDAL RESISTANT VENT CAP.

R. REFER TO ARCHITECTURAL CODE PLAN FOR AREAS WHERE FIRE PENETRATION MATERIALS ARE REQUIRED.

S. MOUNT HOSE BIBBS @ 36" ABOVE GRADE/FF. UNO. PROVIDE WITH NON-REMOVABLE VACUUM BREAKER.

T. PROVIDE INSULATION FOR PIPES PER CALIFORNIA STATE ENERGY CODE (TITLE 24) AND PER SPECIFICATIONS. IN THE EVENT OF CONFLICTS, PROVIDE MATERIAL WHICH MEETS THE MOST STRINGENT REQUIREMENT.

U. PROVIDE ISOLATION VALVE AT EACH BRANCH CONNECTION TO MAIN (CW AND HW).

V. DIELECTRIC ISOLATION FITTINGS AT POINTS OF CONNECTION OF ALL COPPER TUBING AND ANY DISSIMILAR METALS.

W. GRAVITY FLOW WASTE PIPE SIZES SHALL REMAIN AT INDICATED DOWNSTREAM SIZE WHERE SIZES ARE NOT SHOWN.

X. WHERE DOMESTIC COLD AND/OR HOT WATER PIPING DROPS INTO A PIPE CHASE, THE SIZE SHOWN FOR THE PIPE DROPS SHALL BE USED TO THE LAST FIXTURE.

Y. PROVIDE FIRE STOPS ON PIPING TO MAINTAIN RATING OF FIRE RATED WALLS WHERE PENETRATED BY PIPING.

Z. WHERE DOMESTIC HW/CW PIPE SIZES ARE NOT INDICATED, SUPPLY PIPE SIZE SHALL REMAIN LAST INDICATED UPSTREAM SIZE. CIRCULATION PIPE SHALL REMAIN LAST INDICATED DOWNSTREAM SIZE.

AA. WHERE INDICATED PIPE SIZE IS NOT COMMERCIALLY AVAILABLE, PROVIDE NEXT LARGER AVAILABLE SIZE.

AB. PROVIDE WATER HAMMER ARRESTOR (WHA) ON HOT AND COLD WATER BRANCHES THAT SERVE WATER CLOSETS, SINKS, URINALS, WASHING MACHINES, DISHWASHERS, HOSE BIBS, SHOWERS, TUBS, AND OTHER FIXTURES WITH QUICK-CLOSING VALVES. PLACE WHA WITHIN 6 FEET UPSTREAM OF FIXTURE. PROVIDE WITH ACCESS PANEL IF REQUIRED BY LOCAL CODE.

AC. PROVIDE MINIMUM 1/8" SLOPE ON ALL CONDENSATE PIPING. CONDENSATE PIPING SHALL BE INSULATED AND JACKETED.

AD. ALL BURRED ENDS OF WATER PIPING AND TUBING SHALL BE REAMED TO THE FULL BORE OF THE PIPE OR TUBE AND ALL CHIPS SHALL BE REMOVED (SEE CALIFORNIA PLUMBING CODE, 2019 EDITION, SECTION 309.3) ADDITIONALLY, TOOLS USED IN CUTTING OR REAMING SHALL BE KEPT FREE FROM OIL OR GREASE AND WHERE SUCH CONTAMINATION HAS OCCURRED, THE ITEMS AFFECTED SHALL BE REWORKED AND RINSED.

PLUMBING SHEET INDEX

P0.01	PLUMBING LEGENDS, ABBREVIATION & GENERAL NOTES
P1.11	PLUMBING SITE PLAN
P2.11	FIRST FLOOR PLUMBING PLAN
P2.12	SECOND FLOOR PLUMBING PLAN
P2.13	PLUMBING ROOF PLAN
P2.14	FIRST FLOOR PLUMBING PLAN - POOL EQUIPMENT
P4.01	ENLARGED PLUMBING PLAN
P4.02	ENLARGED PLUMBING PLAN
P5.01	PLUMBING DETAILS
P5.02	PLUMBING DETAILS
P6.01	PLUMBING SCHEDULES
P7.01	PLUMBING SCHEMATICS
P8.01	PLUMBING WASTE & VENT RISER DIAGRAM
P8.02	PLUMBING WATER RISER DIAGRAM
P8.03	PLUMBING GAS RISER DIAGRAM

PIPE SCHEDULE

SERVICE	LOCATION	TYPE 'K' COPPER	TYPE 'L' COPPER	NO-HUB CAST IRON	SCH. 40 BLACK STEEL	SCH. 40 GALV. STEEL	POLYETHYLENE	FITTINGS (REFER TO SPECIFICATIONS FOR ADDITIONAL INFORMATION)
WATER	ABOVE GROUND		●					LEAD FREE SOLDERED JOINTS AND FITTINGS
	BELOW GROUND	●						LEAD FREE SOLDERED JOINTS AND FITTINGS
WASTE, STORM DRAIN	ABOVE FLR			●				PROVIDE TYLER 2-BAND NO-HUB COUPLINGS
	BELOW FLR			●				PROVIDE TYLER 4-BAND NO-HUB COUPLINGS
VENT	ABOVE FLR			●				PROVIDE TYLER 2-BAND NO-HUB COUPLINGS
	BELOW FLR			●				PROVIDE TYLER 2-BAND NO-HUB COUPLINGS
CONDENSATE DRAIN	INSIDE		●					95-5 SOLDERED FITTINGS
	OUTSIDE		●					95-5 SOLDERED FITTINGS
NATURAL GAS	INSIDE				●			SCH. 40 THREADED FITTINGS
	OUTSIDE						●	SCH. 40 THREADED FITTINGS
	UNDERGROUND						●	SOLVENT WELD FITTINGS

LEAD-FREE NOTE

ALL PLUMBING PIPING/FITTINGS AND PLUMBING FIXTURES INTENDED TO CONVEY OR DISPENSE WATER FOR DRINKING OR COOKING SHALL BE "LEAD FREE" IN COMPLIANCE WITH AB 1953. CONTRACTOR SHALL PROVIDE CERTIFICATION AS PART OF THE PLUMBING SUBMITTALS THAT ALL PLUMBING PRODUCTS COMPLY WITH AB 1953.

APPLICABLE CODES AND STANDARDS

1. CITY OF BELL GARDENS MUNICIPAL CODE
2. 2019 CALIFORNIA BUILDING CODE
3. 2019 CALIFORNIA ELECTRICAL CODE
4. 2019 CALIFORNIA MECHANICAL CODE
5. 2019 CALIFORNIA PLUMBING CODE
6. 2019 CALIFORNIA ENERGY CODE
7. 2019 CALIFORNIA GREEN BUILDING CODE
8. 2019 CALIFORNIA FIRE CODE
9. ALL CODES TO INCLUDE COUNTY OF LOS ANGELES CODE AMENDMENTS

GREEN BUILDING COMPLIANCE

A. PLUMBING FIXTURES AND FITTINGS SHALL MEET THE STANDARDS REFERENCED IN 2019 CALIFORNIA GREEN BUILDING STANDARD CODE 5.303.

B. PER 2019 CALIFORNIA GREEN BUILDING STANDARD CODE SECTION 4.303, PLUMBING FIXTURES (WATER CLOSETS AND URINALS) AND FITTINGS (FAUCETS AND SHOWERHEADS) SHALL COMPLY WITH THE FOLLOWING:

1. WATER CLOSETS SHALL NOT EXCEED 1.28 GALLONS PER FLUSH.
2. URINALS SHALL NOT EXCEED 0.5 GALLONS PER FLUSH.
3. SHOWERHEADS SHALL HAVE A MAXIMUM FLOW RATE OF 1.8 GALLONS PER MINUTE AT 80 PSI.
4. LAVATORY FAUCETS SHALL NOT EXCEED 1.2 GALLONS PER MINUTE AT 60 PSI.
5. KITCHEN FAUCETS SHALL NOT EXCEED 1.8 GALLONS PER MINUTE AT 60 PSI.

PLUMBING SCOPE OF WORK

PROVIDE PLUMBING UTILITIES (WASTE, VENT, STORM, NATURAL GAS, HOT, COLD & RETURN WATER PIPING) TO POOL LOCKER ROOMS, RESTROOMS, MECHANICAL ROOMS, PANTRY AREA AND POOL EQUIPMENT ROOMS.

1. PROVIDE AN INSTANTANEOUS ELECTRIC HOT WATER HEATER TO POOL EQUIPMENT HAND SINK AND EMERGENCY FIXTURES..
2. THE REST OF THE BUILDINGS HOT WATER WILL BE FEED FROM A GAS WATER HEATER IN MECHANICAL ROOM.

MEDIUM PRESSURE GAS SIZING CHART

A. POOL EQUIPMENT (2 @ 1500) — 3000 CFH
B. MAKE-UP AIR UNIT (1 @ 120) — 120 CFH
C. WATER HEATER (1 @ 285) — 285 CFH
GRAND TOTAL CONNECTED LOAD — 3405 CFH

PIPE SIZE	CFH
1/2"	433
3/4"	905
1"	1710
1-1/4"	3500
1-1/2"	5250
2"	10100

NOTE: 1. NATURAL GAS SYSTEM BASED ON 2019 CPC, TABLE 1215.2(6) SCHEDULE 40 METALLIC PIPE.
2. SYSTEM DEVELOPED LENGTH = 400 FT.5 PSI, 3.5 PSI PRESSURE DROP

LOW PRESSURE GAS SIZING CHART (POOL AREA)

A. POOL EQUIPMENT (2 @ 1500) — 3000 CFH
B. MAKE-UP AIR UNIT (1 @ 120) — 120 CFH
C. WATER HEATER (1 @ 285) — 285 CFH
GRAND TOTAL CONNECTED LOAD — 3405 CFH

PIPE SIZE	CFH
1/2"	172
3/4"	360
1"	678
1-1/4"	1390
1-1/2"	2090
2"	4020

NOTE: 1. NATURAL GAS SYSTEM BASED ON 2019 CPC, TABLE 1215.2(1) - SCHEDULE 40 METALLIC PIPE
2. SYSTEM MAXIMUM DEVELOPED LENGTH = 10 FT. LESS THAN 2 PSI, 0.5" W.C. PRESSURE DROP

ALFATECH
421 EAST HUNTINGTON DRIVE
MONROVIA, CA 91016
PHONE: (213) 212-9860
www.atce.com

CITY OF GARDENA · FREEWAY CITY · INCORPORATED 1930

PREPARED BY:
SVA ARCHITECTS
6 HUTTON CENTRE DR, SUITE 1150
SANTA ANA, CA 92707
T 949.809.3380 WWW.SVA-ARCHITECTS.COM

THIS DOCUMENT CONTAINS INFORMATION PROPRIETARY TO SVA ARCHITECTS INC. AND IS FURNISHED IN CONFIDENCE FOR THE LIMITED PURPOSE OF EVALUATION, BIDDING OR REVIEW. THIS DOCUMENT OR ITS CONTENTS MAY NOT BE USED FOR ANY OTHER PURPOSE AND MAY NOT BE REPRODUCED OR DISCLOSED TO OTHERS WITHOUT THE PRIOR WRITTEN CONSENT OF SVA ARCHITECTS INC. ALL RIGHTS RESERVED, © COPYRIGHT 2018.

REGISTERED PROFESSIONAL ENGINEER · NIKOLAOS J. KOURASSIS · No. M31713 · Exp. 6/30/2025 · MECHANICAL · STATE OF CALIFORNIA

REVISIONS

NO.	DESCRIPTION	DATE	APPROVED
1	90% CD SUBMITTAL	12/15/2022	
2	100% CD SUBMITTAL	05/01/2023	
3	FINAL SUBMITTAL	06/30/2023	

B.M.: THE CITY OF GARDENA BENCHMARK NO. 5D-15 ELEV. = 43.508'

CITY OF GARDENA
DEPARTMENT OF PUBLIC WORKS - ENGINEERING
PLUMBING LEGENDS, ABBREVIATIONS, & GENERAL NOTES
COMMUNITY AQUATICS & SENIOR CENTER
P0.01

	INITIAL	DATE
DESIGNED BY		05/25/2022
DRAWN BY		06/20/23
CHECKED BY		06/29/23

APPROVED BY:
APPROVED BY: DIRECTOR OF PUBLIC WORKS

FILE PATH:
PLOT TIME: 5/20/2022 5:04:11 PM

KEYNOTES

1. 4" W BEL. GRD. TO 5'-0" FR. BLDG. SEE CIVIL FOR CONT.
2. 1-1/4" MPG BEL. GRD.
3. 3" CW BEL. GRD. TO 5'-0" FR. BLDG. SEE CIVIL FOR CONT.
4. 3/4" CW & 2" W BEL. GRD. SEE CIVIL FOR CONT.
5. 6" W BEL. GRD. TO 5'-0" FR. BLDG. SEE CIVIL FOR CONT.
6. 1-1/4" MPG BEL. GRD. TO POOL EQUIPMENT ROOM
7. 2" CW BEL. GRD. TO 5'-0" BEL. GRD. SEE CIVIL FOR CONT.
8. 3" SD BEL. GRD. TO 5'-0" BEL. GRD. SEE CIVIL FOR CONT.
9. NOT USED
10. 2" W BEL. GRD. TO 5'-0" FR. BLDG. SEE CIVIL FOR CONT.
11. 3/4" CW & 2" W BEL. GRD. CONT. TO POOL EQUIPMENT PIPING

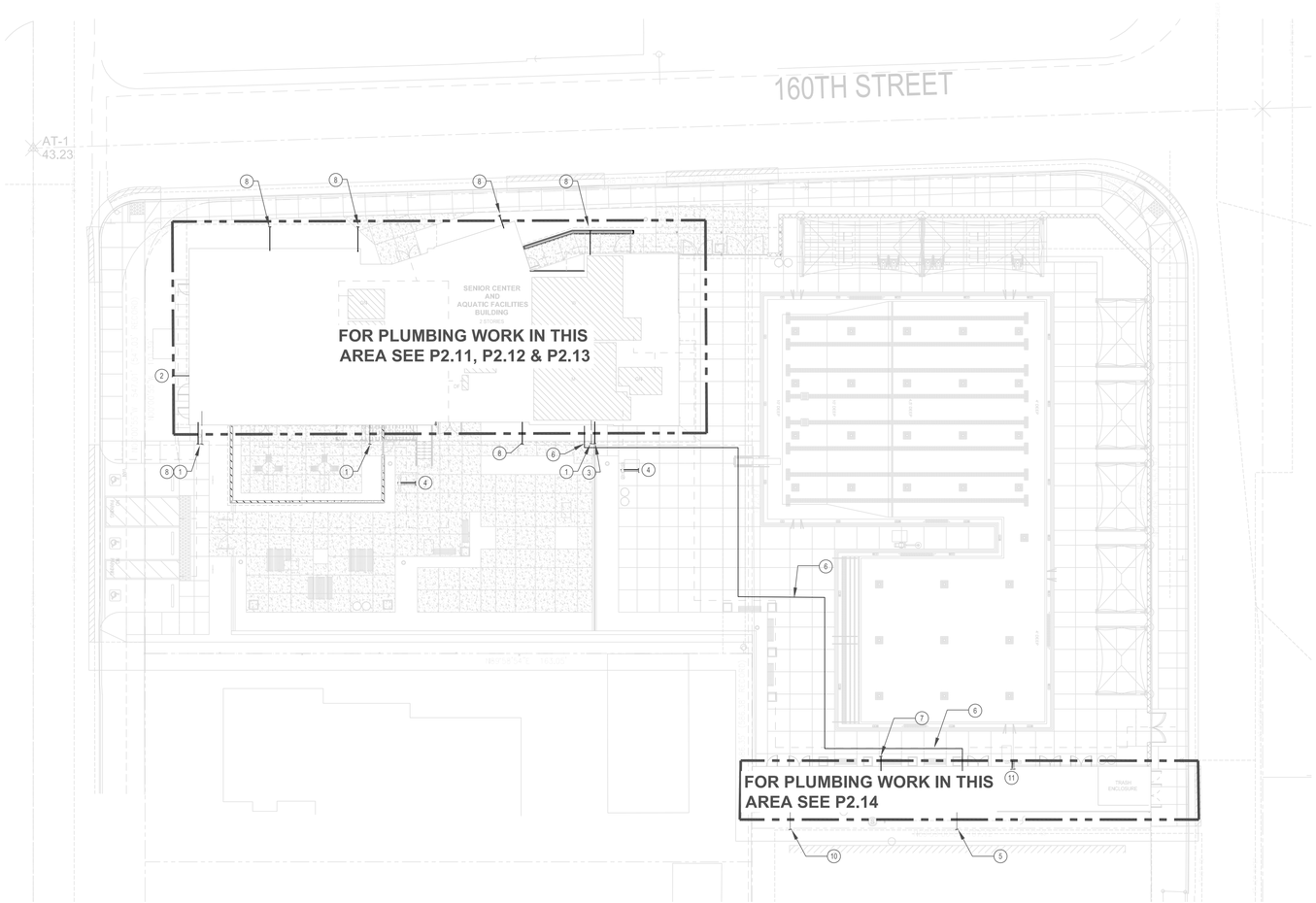

1 - PLUMBING SITE PLAN
SCALE: 1/16" = 1'-0"

ALFATECH
421 EAST HUNTINGTON DRIVE
MONROVIA, CA 91016
PHONE: (213) 212-9860
www.atce.com

PREPARED BY:
SVA ARCHITECTS
6 HUTTON CENTRE DR, SUITE 1150
SANTA ANA, CA 92707
T 949.809.3380 WWW.SVA-ARCHITECTS.COM

THIS DOCUMENT CONTAINS INFORMATION PROPRIETARY TO SVA ARCHITECTS INC. AND IS FURNISHED IN CONFIDENCE FOR THE LIMITED PURPOSE OF EVALUATION, BIDDING OR REVIEW. THIS DOCUMENT OR ITS CONTENTS MAY NOT BE USED FOR ANY OTHER PURPOSE AND MAY NOT BE REPRODUCED OR DISCLOSED TO OTHERS WITHOUT THE PRIOR WRITTEN CONSENT OF SVA ARCHITECTS INC. ALL RIGHTS RESERVED. © COPYRIGHT 2018.

REGISTERED PROFESSIONAL ENGINEER — NICHOLAS J. KOUNTIS — No. M31713 — Exp. 6/30/2025 — MECHANICAL — STATE OF CALIFORNIA

REVISIONS			
NO.	DESCRIPTION	DATE	APPROVED
1	90% CD SUBMITTAL	12/15/2022	
2	100% CD SUBMITTAL	05/01/2023	
3	FINAL SUBMITTAL	06/30/2023	

B.M.: THE CITY OF GARDENA BENCHMARK NO. SD-15
ELEV. = 43.508'

	INITIAL	DATE
DESIGNED BY		06/25/2022
DRAWN BY		06/20/23
CHECKED BY		06/29/23

CITY OF GARDENA
DEPARTMENT OF PUBLIC WORKS - ENGINEERING
PLUMBING SITE PLAN
COMMUNITY AQUATICS & SENIOR CENTER
P1.11

APPROVED BY:
APPROVED BY: DIRECTOR OF PUBLIC WORKS
SHT. 128 OF 195 DWG. NO. 5-2606

PLOT DATE: 6/30/2023 3:04:17 PM

KEYNOTES

1. 4" W BEL. GRD. SEE P1.11 FOR CONT.
2. 2" CW BEL. GRD. SEE P1.11 FOR CONT.
3. 1-1/4" MPG BEL GRD. SEE P1.11 FOR CONT.
4. 3" SD BEL. GRD. SEE P.1.11 FOR CONT.
5. 3" OD +6"AFF. PROVIDE DOWNSPOUT NOZZLE WITH BIRDSCREEN
6. GAS PIPING BEL. GRD. BY SO CAL GAS
7. GAS METER ASSEMBLY. PROVIDE EARTHQUAKE SEISMIC VALVE (SV-1)
8. 2" CW BEL. GRD. SEE P1.11 FOR CONT.
9. 2" CW BEL. GRD. SEE P1.11 FOR CONT.
10. 2" CW BEL. GRD. SEE P1.11 FOR CONT.

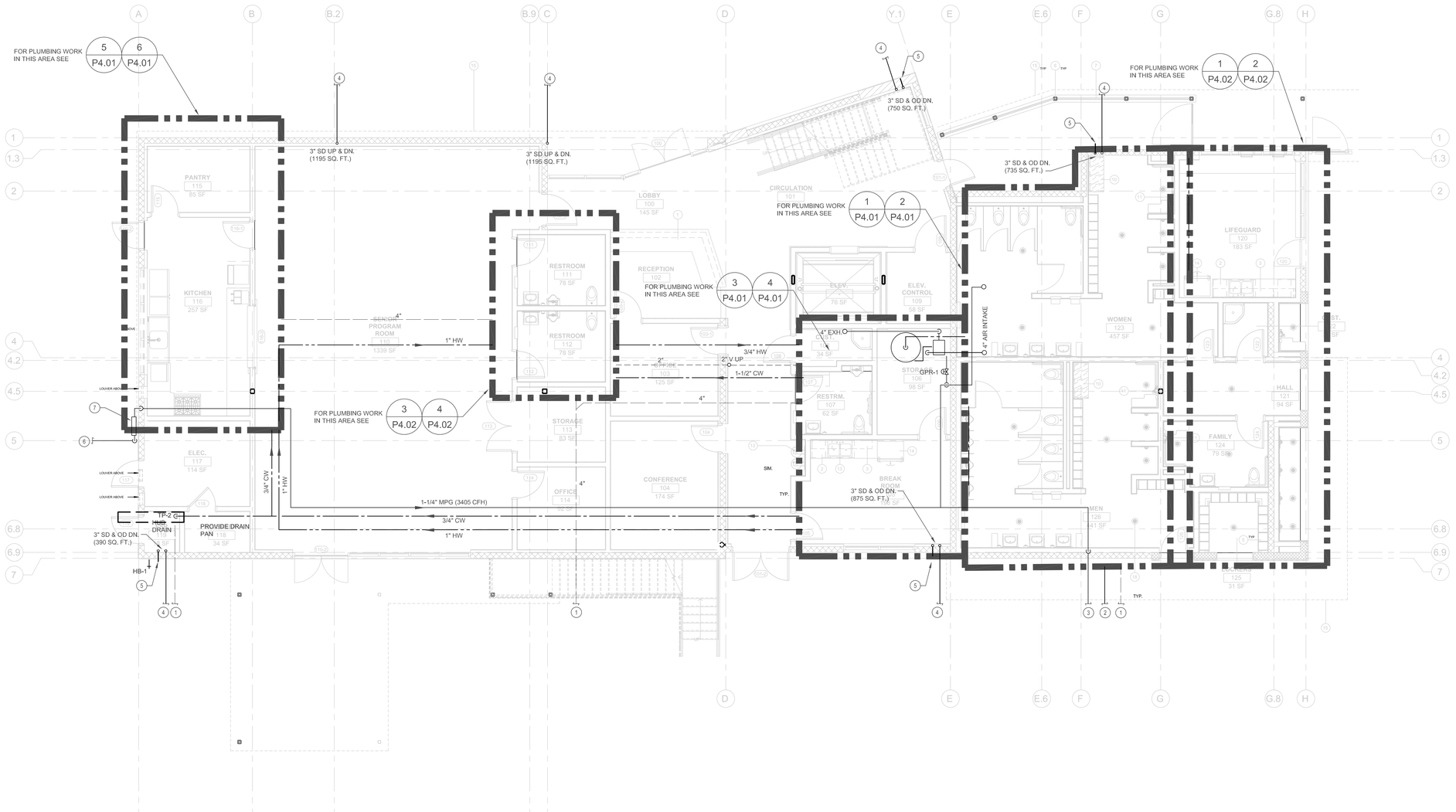

1 - FIRST FLOOR PLUMBING PLAN

SCALE: 3/16" = 1'-0"

ALFATECH
421 EAST HUNTINGTON DRIVE
MONROVIA, CA 91016
PHONE: (213) 212-9860
www.atce.com

PREPARED BY:
SVA ARCHITECTS
6 HUTTON CENTRE DR, SUITE 1150
SANTA ANA, CA 92707
T 949.809.3380 WWW.SVA-ARCHITECTS.COM

THIS DOCUMENT CONTAINS INFORMATION PROPRIETARY TO SVA ARCHITECTS INC. AND IS FURNISHED IN CONFIDENCE FOR THE LIMITED PURPOSE OF EVALUATION, BIDDING OR REVIEW. THIS DOCUMENT OR ITS CONTENTS MAY NOT BE USED FOR ANY OTHER PURPOSE AND MAY NOT BE REPRODUCED OR DISCLOSED TO OTHERS WITHOUT THE PRIOR WRITTEN CONSENT OF SVA ARCHITECTS INC. ALL RIGHTS RESERVED. © COPYRIGHT 2018.

REGISTERED PROFESSIONAL ENGINEER
NICHOLAS J. KOWALSKI
No. M31713
Exp. 6/30/2025
MECHANICAL
STATE OF CALIFORNIA

REVISIONS

NO.	DESCRIPTION	DATE	APPROVED
1	90% CD SUBMITTAL	12/15/2022	
2	100% CD SUBMITTAL	05/01/2023	
3	FINAL SUBMITTAL	06/30/2023	

B.M.: THE CITY OF GARDENA BENCHMARK NO. 5D-15
ELEV. = 43.508'

CITY OF GARDENA
DEPARTMENT OF PUBLIC WORKS - ENGINEERING

FIRST FLOOR PLUMBING PLAN

COMMUNITY AQUATICS & SENIOR CENTER

P2.11

	INITIAL	DATE
DESIGNED BY		05/25/2022
DRAWN BY		06/20/23
CHECKED BY		06/29/23

APPROVED BY:

APPROVED BY: DIRECTOR OF PUBLIC WORKS

SHT. 129 OF 195 DWG. NO. 5-2606

FILE PATH: 5-2606 2022 5:04:11 PM
PLOT DATE: 6/30/2023 5:04:11 PM

KEYNOTES

1 -

2 -

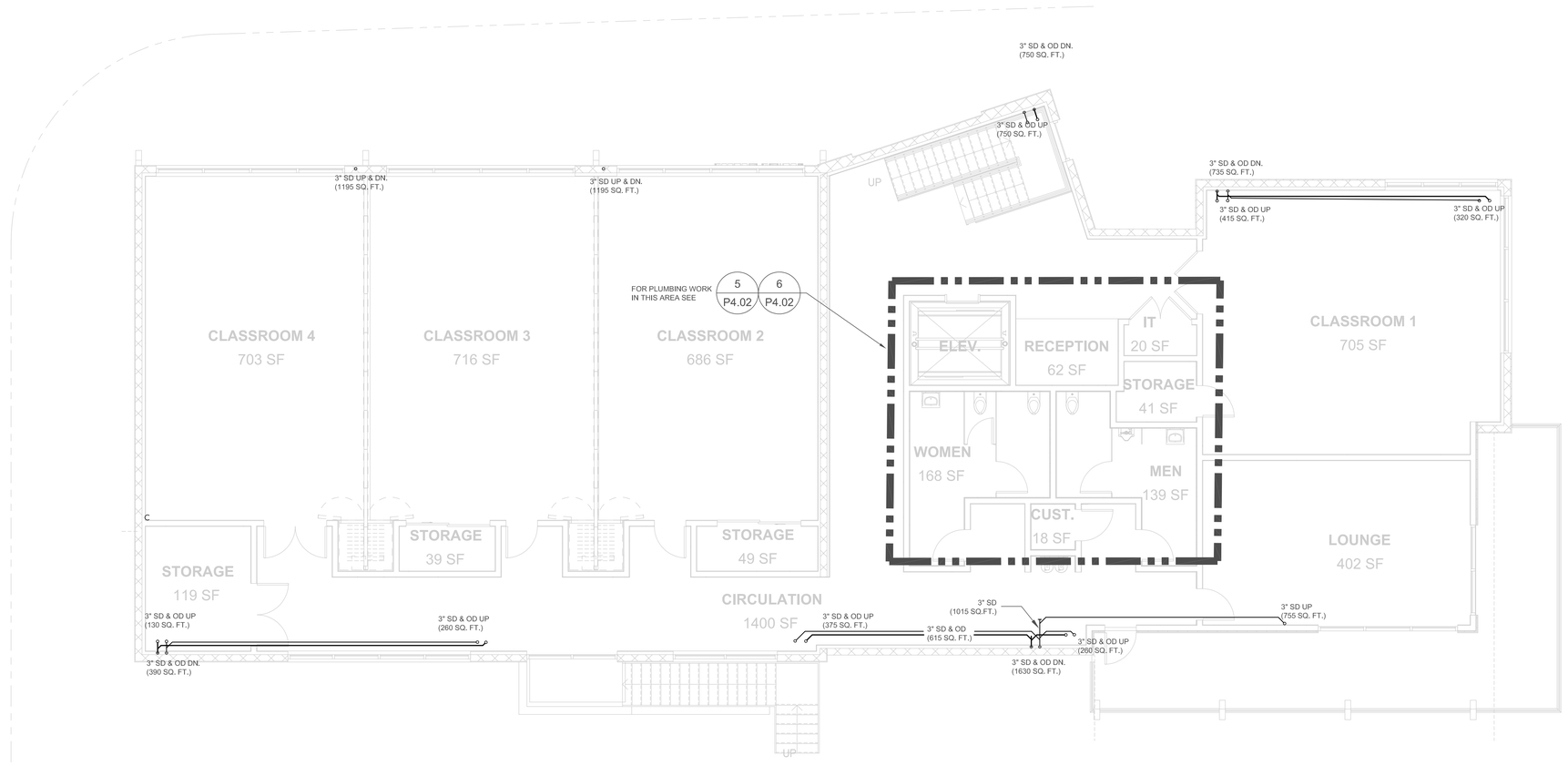

1 - SECOND FLOOR PLUMBING PLAN

SCALE: 3/16" = 1'-0"

ALFATECH
421 EAST HUNTINGTON DRIVE
MONROVIA, CA 91016
PHONE: (213) 212-9860
www.atce.com

PREPARED BY:
SVA ARCHITECTS
6 HUTTON CENTRE DR, SUITE 1150
SANTA ANA, CA 92707
T 949.809.3380 WWW.SVA-ARCHITECTS.COM

THIS DOCUMENT CONTAINS INFORMATION PROPRIETARY TO SVA ARCHITECTS INC. AND IS FURNISHED IN CONFIDENCE FOR THE LIMITED PURPOSE OF EVALUATION, BIDDING OR REVIEW. THIS DOCUMENT OR ITS CONTENTS MAY NOT BE USED FOR ANY OTHER PURPOSE AND MAY NOT BE REPRODUCED OR DISCLOSED TO OTHERS WITHOUT THE PRIOR WRITTEN CONSENT OF SVA ARCHITECTS INC. ALL RIGHTS RESERVED. © COPYRIGHT 2018.

REGISTERED PROFESSIONAL ENGINEER — No. M31713 — Exp. 6/30/2025 — MECHANICAL — STATE OF CALIFORNIA

B.M.: THE CITY OF GARDENA BENCHMARK NO. SD-15 ELEV. = 43.508'

REVISIONS

NO.	DESCRIPTION	DATE	APPROVED
1	90% CD SUBMITTAL	12/15/2022	
2	100% CD SUBMITTAL	05/01/2023	
3	FINAL SUBMITTAL	06/30/2023	

	INITIAL	DATE
DESIGNED BY		05/25/2022
DRAWN BY		06/20/23
CHECKED BY		06/29/23

CITY OF GARDENA
DEPARTMENT OF PUBLIC WORKS - ENGINEERING

SECOND FLOOR PLUMBING PLAN

COMMUNITY AQUATICS & SENIOR CENTER

P2.12

APPROVED BY:

APPROVED BY: DIRECTOR OF PUBLIC WORKS

SHT. 130 OF 195 DWG. NO. 5-2606

PLOT DATE: 6/29/2023 8:54:11 PM

KEYNOTES

1 -

2 -

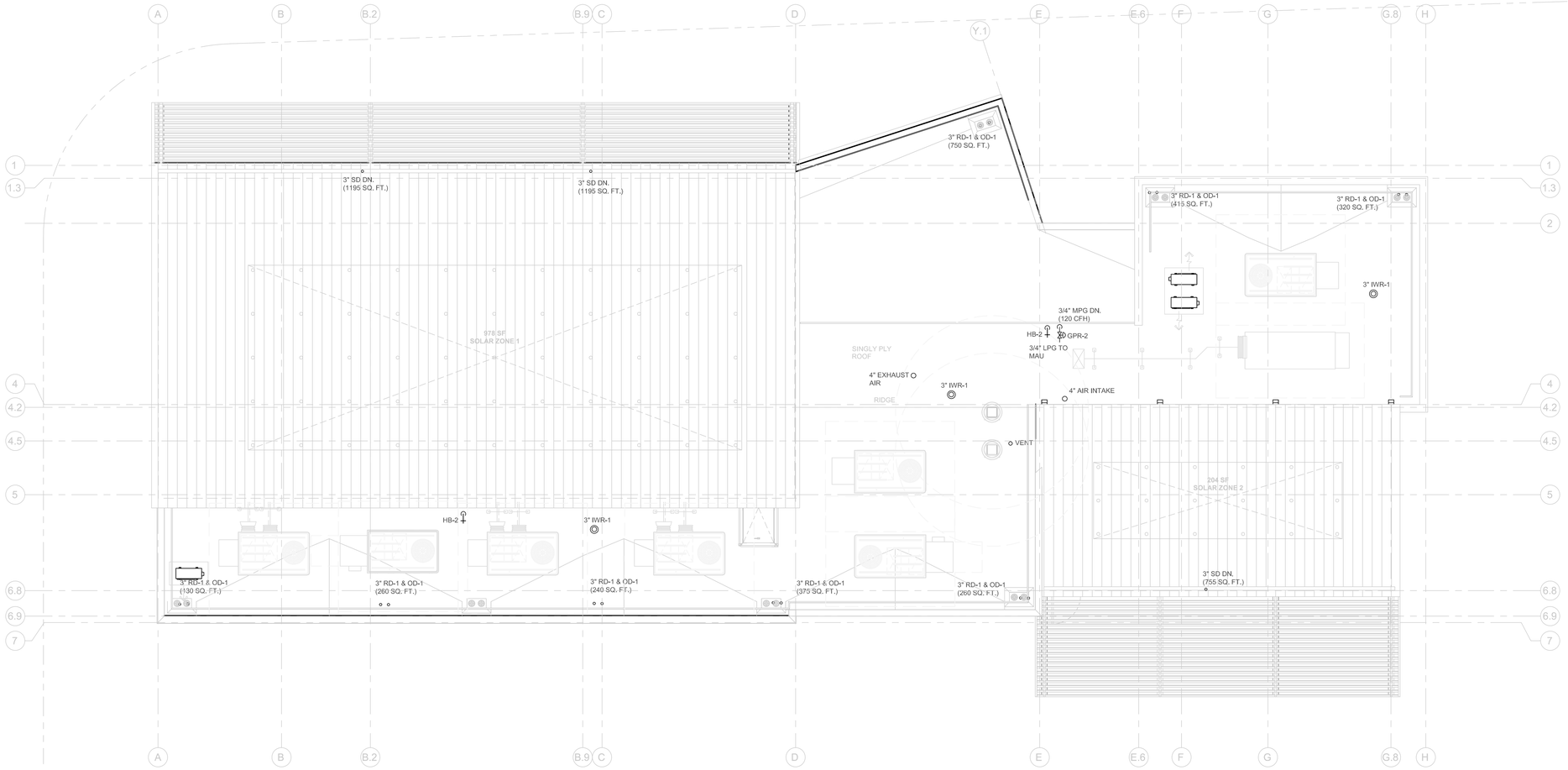

1 - PLUMBING ROOF PLAN

SCALE: 3/16" = 1'-0"

ALFATECH
421 EAST HUNTINGTON DRIVE
MONROVIA, CA 91016
PHONE: (213) 212-9860
www.atce.com

CITY OF GARDENA INCORPORATED 1930

PREPARED BY:
SVA ARCHITECTS
6 HUTTON CENTRE DR, SUITE 1150
SANTA ANA, CA 92707
T 949.809.3380 WWW.SVA-ARCHITECTS.COM

THIS DOCUMENT CONTAINS INFORMATION PROPRIETARY TO SVA ARCHITECTS INC. AND IS FURNISHED IN CONFIDENCE FOR THE LIMITED PURPOSE OF EVALUATION, BIDDING OR REVIEW. THIS DOCUMENT OR ITS CONTENTS MAY NOT BE USED FOR ANY OTHER PURPOSE AND MAY NOT BE REPRODUCED OR DISCLOSED TO OTHERS WITHOUT THE PRIOR WRITTEN CONSENT OF SVA ARCHITECTS INC. ALL RIGHTS RESERVED, © COPYRIGHT 2018.

REGISTERED PROFESSIONAL ENGINEER — MECHANICAL — No. M31713 — Exp. 9/30/2025 — STATE OF CALIFORNIA

REVISIONS			
NO.	DESCRIPTION	DATE	APPROVED
1	90% CD SUBMITTAL	12/15/2022	
2	100% CD SUBMITTAL	05/01/2023	
3	FINAL SUBMITTAL	06/30/2023	

B.M.: THE CITY OF GARDENA BENCHMARK NO. SD-15
ELEV. = 43.508'

	INITIAL	DATE
DESIGNED BY		06/25/2022
DRAWN BY		06/20/23
CHECKED BY		06/29/23

CITY OF GARDENA
DEPARTMENT OF PUBLIC WORKS - ENGINEERING

PLUMBING ROOF PLAN

COMMUNITY AQUATICS & SENIOR CENTER

P2.13

APPROVED BY:

APPROVED BY: DIRECTOR OF PUBLIC WORKS

SHT. 131 OF 195 DWG. NO. 5-2606

PLOT DATE: 6/20/2023 5:04:17 PM

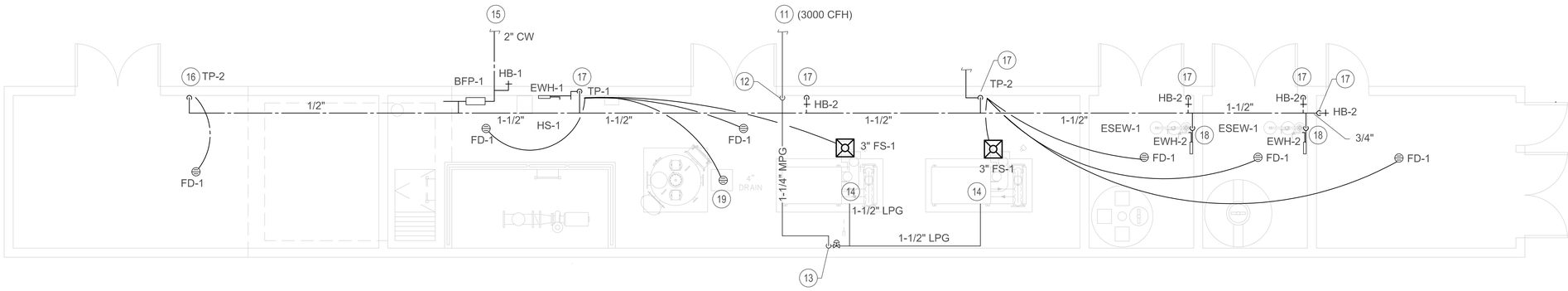

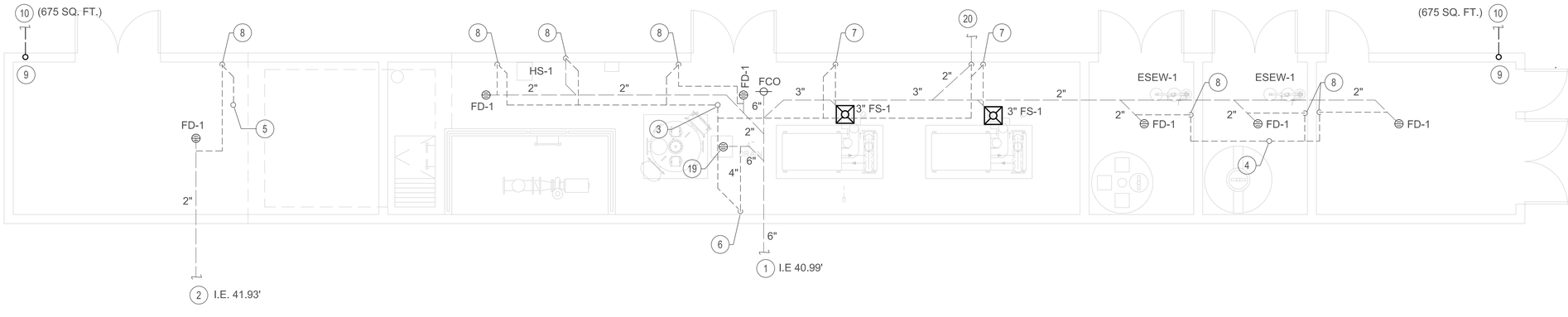

KEYNOTES

1. 6" W BEL. GRD. TO 5'-0" OUTSIDE OF BLDG. SEE CIVIL FOR CONT.
2. 2" W BEL. GRD. TO 5'-0" OUTSIDE OF BLDG. SEE CIVIL FOR CONT.
3. 4" V UP
4. 2" V UP
5. 1-1/2" V UP
6. 4" V RISE UP
7. 2" V RISE UP
8. 1-1/2" V RISE UP
9. 3" SD DN. (675 SQ. FT.)
10. 3" SD BEL. GRD. TO 5'-0" OUTSIDE OF BLDG. SEE CIVIL FOR CONT.
11. 1-1/4" MPG BEL. GRD. TO 5'-0" OUTSIDE. SEE P1.11 FOR CONT.
12. 1-1/4" MPG TIGHT TO BEL. STRUCTURE
13. 1-1/4" MPG DN TO GPR-3
14. 1-1/4' LPG TO POOL EQUIPMENT.
15. 2" CW BEL. GRD. TO 5'-0" OUTSIDE OF BLDG. SEE CIVIL FOR CONT.
16. 1/2" CW DN.
17. 3/4" CW DN.
18. 1-1/2" CW DN. TO TMV-3 AND EWH-2
19. 6" FLOOR DRAIN FOR BACKWASH FLUSH TANK
20. 2" W BEL. GRD.

1 - FIRST FLOOR PLUMBING PLAN

SCALE: 1/4" = 1'-0"

ALFATECH
421 EAST HUNTINGTON DRIVE
MONROVIA, CA 91016
PHONE: (213) 212-9860
www.atce.com

PREPARED BY:

SVA ARCHITECTS
6 HUTTON CENTRE DR, SUITE 1150
SANTA ANA, CA 92707
T 949.809.3380 WWW.SVA-ARCHITECTS.COM

THIS DOCUMENT CONTAINS INFORMATION PROPRIETARY TO SVA ARCHITECTS INC. AND IS FURNISHED IN CONFIDENCE FOR THE LIMITED PURPOSE OF EVALUATION, BIDDING OR REVIEW. THIS DOCUMENT OR ITS CONTENTS MAY NOT BE USED FOR ANY OTHER PURPOSE AND MAY NOT BE REPRODUCED OR DISCLOSED TO OTHERS WITHOUT THE PRIOR WRITTEN CONSENT OF SVA ARCHITECTS INC. ALL RIGHTS RESERVED. © COPYRIGHT 2018.

REGISTERED PROFESSIONAL ENGINEER
THOMAS J. KOUNDERS
No. M31713
Exp. 6/30/2025
MECHANICAL
STATE OF CALIFORNIA

REVISIONS

NO.	DESCRIPTION	DATE	APPROVED
1	90% CD SUBMITTAL	12/15/2022	
2	100% CD SUBMITTAL	05/01/2023	
3	FINAL SUBMITTAL	06/30/2023	

B.M.: THE CITY OF GARDENA BENCHMARK NO. 5D-15
ELEV. = 43.508'

CITY OF GARDENA
DEPARTMENT OF PUBLIC WORKS - ENGINEERING

FIRST FLOOR PLUMBING PLAN - POOL EQUIPMENT

COMMUNITY AQUATICS & SENIOR CENTER
P2.14

	INITIAL	DATE
DESIGNED BY		05/25/2022
DRAWN BY		06/20/23
CHECKED BY		06/29/23

APPROVED BY:

APPROVED BY: DIRECTOR OF PUBLIC WORKS

SHT. 132 OF 195 DWG. NO. 5-2606

FILE PATH:
FILE NAME: 6.00.2022 5:04:11 PM

KEYNOTES

1 -

2 -

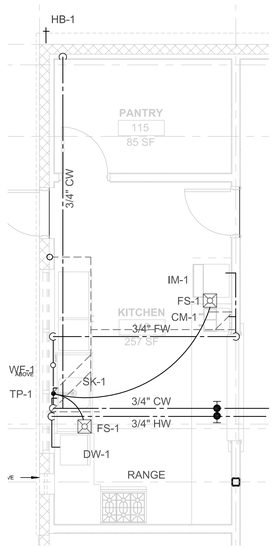

6 - ENLARGED PLUMBING PLAN - KITCHEN WATER & GAS

SCALE: 1/4" = 1'-0"

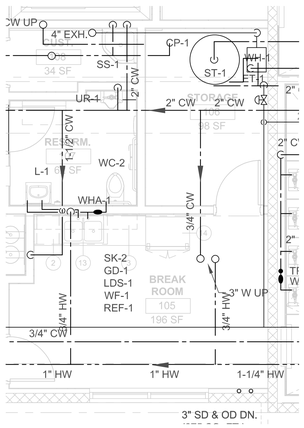

4 - ENLARGED PLUMBING PLAN - RESTROOM & STORAGE WATER & GAS

SCALE: 1/4" = 1'-0"

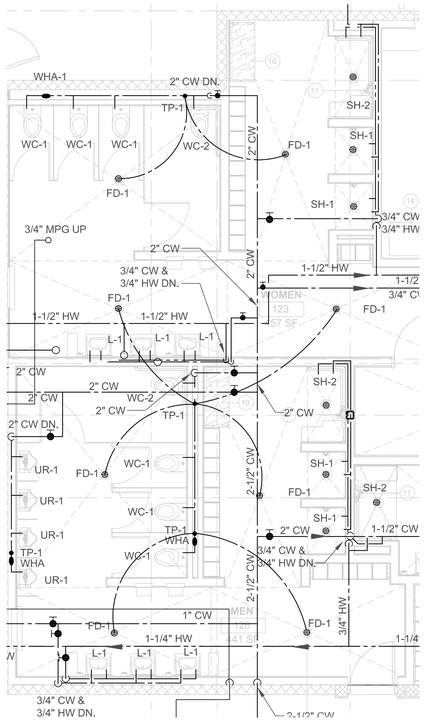

2 - ENLARGED PLUMBING PLAN - MAIN RESTROOM WATER & GAS

SCALE: 1/4" = 1'-0"

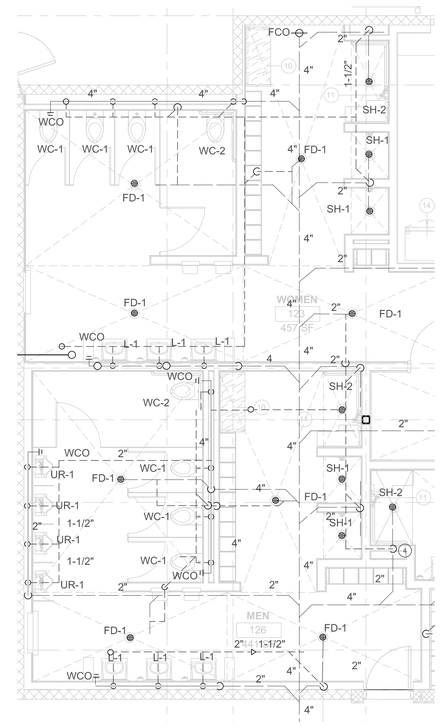

1 - ENLARGED PLUMBING PLAN - MAIN RESTROOM WASTE & VENT

SCALE: 1/4" = 1'-0"

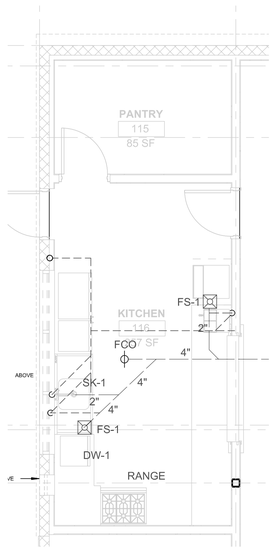

5 - ENLARGED PLUMBING PLAN - KITCHEN WASTE & VENT

SCALE: 1/4" = 1'-0"

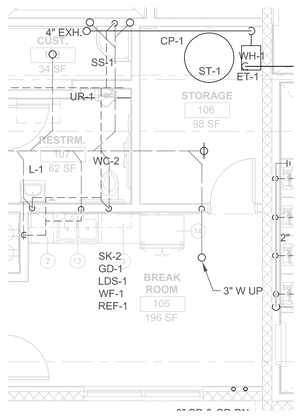

3 - ENLARGED PLUMBING PLAN - RESTROOM & STORAGE WASTE & VENT

SCALE: 1/4" = 1'-0"

ALFATECH
421 EAST HUNTINGTON DRIVE
MONROVIA, CA 91016
PHONE: (213) 212-9860
www.atce.com

PREPARED BY:
SVA ARCHITECTS
6 HUTTON CENTRE DR, SUITE 150
SANTA ANA, CA 92707
T 949.809.3380 WWW.SVA-ARCHITECTS.COM

THIS DOCUMENT CONTAINS INFORMATION PROPRIETARY TO SVA ARCHITECTS INC. AND IS FURNISHED IN CONFIDENCE FOR THE LIMITED PURPOSE OF EVALUATION, BIDDING OR REVIEW. THIS DOCUMENT OR ITS CONTENTS MAY NOT BE USED FOR ANY OTHER PURPOSE AND MAY NOT BE REPRODUCED OR DISCLOSED TO OTHERS WITHOUT THE PRIOR WRITTEN CONSENT OF SVA ARCHITECTS INC. ALL RIGHTS RESERVED. © COPYRIGHT 2018.

REGISTERED PROFESSIONAL ENGINEER — MECHANICAL — No. M31713 — Exp. 6/30/2025 — STATE OF CALIFORNIA

REVISIONS

NO.	DESCRIPTION	DATE	APPROVED
1	90% CD SUBMITTAL	12/15/2022	
2	100% CD SUBMITTAL	05/01/2023	
3	FINAL SUBMITTAL	06/30/2023	

B.M.: THE CITY OF GARDENA BENCHMARK NO. SD-15 ELEV. = 43.508'

CITY OF GARDENA

DEPARTMENT OF PUBLIC WORKS - ENGINEERING

ENLARGED PLUMBING PLANS

COMMUNITY AQUATICS & SENIOR CENTER

P4.01

	INITIAL	DATE
DESIGNED BY		05/25/2022
DRAWN BY		06/20/23
CHECKED BY		06/29/23

APPROVED BY:

APPROVED BY: DIRECTOR OF PUBLIC WORKS

SHT. 133 OF 195 DWG. NO. 5-2606

PLOT DATE: 6/29/2023 5:04:11 PM

KEYNOTES

1 -
2 -

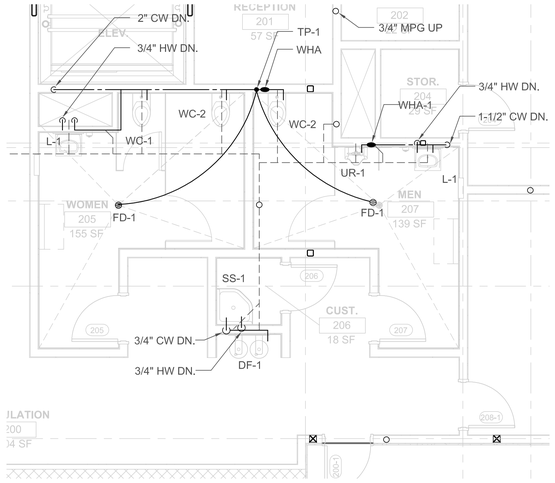

6 - ENLARGED PLUMBING PLAN - LEVEL 2 WATER & GAS

SCALE: 1/4" = 1'-0"

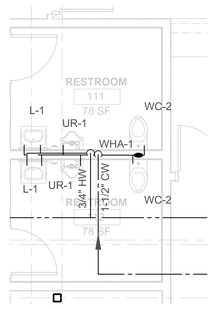

4 - ENLARGED PLUMBING PLAN - RESTROOM WATER & GAS

SCALE: 1/4" = 1'-0"

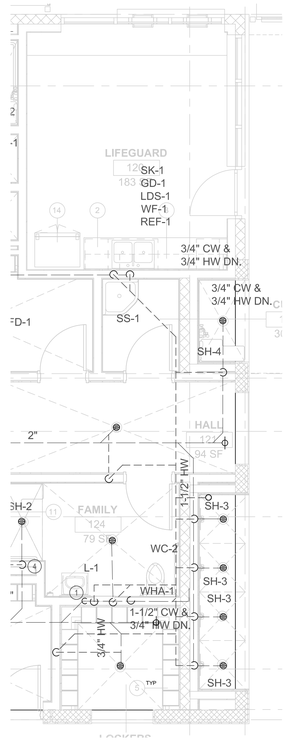

2 - ENLARGED PLUMBING PLAN - LIFEGUARD & FAMILY WATER & GAS

SCALE: 1/4" = 1'-0"

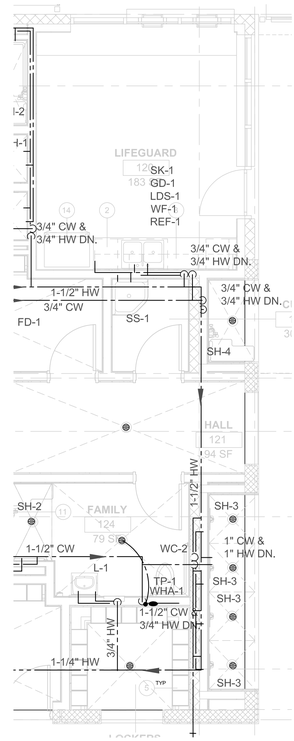

1 - ENLARGED PLUMBING PLAN - LIFEGUARD & FAMILY WASTE & VENT

SCALE: 1/4" = 1'-0"

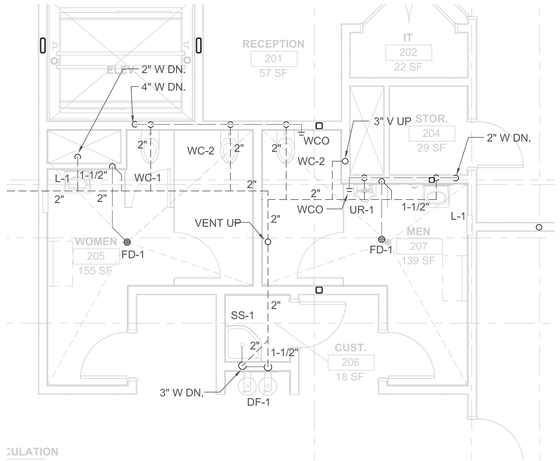

5 - ENLARGED PLUMBING PLAN - LEVEL 2 WASTE & VENT

SCALE: 1/4" = 1'-0"

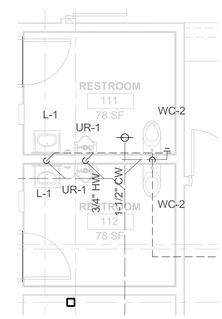

3 - ENLARGED PLUMBING PLAN - RESTROOM WASTE & VENT

SCALE: 1/4" = 1'-0"

ALFATECH
421 EAST HUNTINGTON DRIVE
MONROVIA, CA 91016
PHONE: (213) 212-9860
www.atce.com

PREPARED BY:
SVA ARCHITECTS
6 HUTTON CENTRE DR. SUITE 1150
SANTA ANA, CA 92707
T 949.809.3380 WWW.SVA-ARCHITECTS.COM

THIS DOCUMENT CONTAINS INFORMATION PROPRIETARY TO SVA ARCHITECTS INC. AND IS FURNISHED IN CONFIDENCE FOR THE LIMITED PURPOSE OF EVALUATION, BIDDING OR REVIEW. THIS DOCUMENT OR IT'S CONTENTS MAY NOT BE USED FOR ANY OTHER PURPOSE AND MAY NOT BE REPRODUCED OR DISCLOSED TO OTHERS WITHOUT THE PRIOR WRITTEN CONSENT OF SVA ARCHITECTS INC. ALL RIGHTS RESERVED. © COPYRIGHT 2018.

REGISTERED PROFESSIONAL ENGINEER
RICHARD J. NGAI
No. M31713
Exp. 6/30/2025
MECHANICAL
STATE OF CALIFORNIA

REVISIONS

NO.	DESCRIPTION	DATE	APPROVED
1	90% CD SUBMITTAL	12/15/2022	
2	100% CD SUBMITTAL	05/01/2023	
3	FINAL SUBMITTAL	06/30/2023	

B.M.: THE CITY OF GARDENA BENCHMARK NO. SD-15
ELEV. = 43.508'

CITY OF GARDENA
DEPARTMENT OF PUBLIC WORKS - ENGINEERING

ENLARGED PLUMBING PLANS

COMMUNITY AQUATICS & SENIOR CENTER
P4.02

	INITIAL	DATE
DESIGNED BY		05/25/2022
DRAWN BY		06/20/23
CHECKED BY		06/29/23

APPROVED BY:
APPROVED BY: DIRECTOR OF PUBLIC WORKS
SHT. 134 OF 195 DWG. NO. 5-2606

PLOT DATE: 6/29/2023 5:56:17 PM

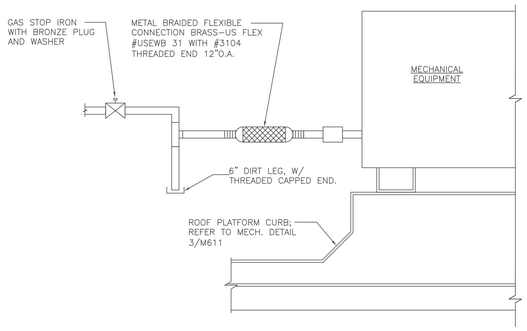

TYPICAL GAS CONNECTION AT MECHANICAL UNIT DETAIL | SCALE NONE | 9

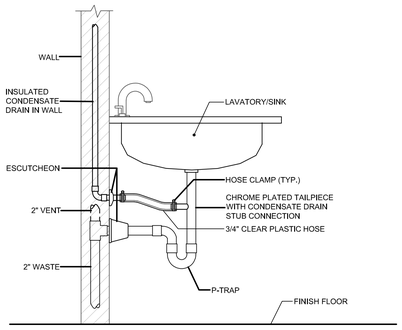

CONDENSATE DRAIN TO TRAP | SCALE NONE | 6

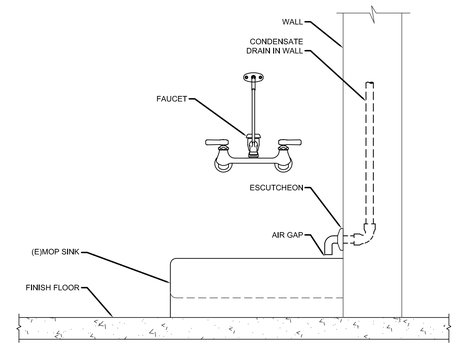

CONDENSATE TO SERVICE SINK | SCALE NONE | 3

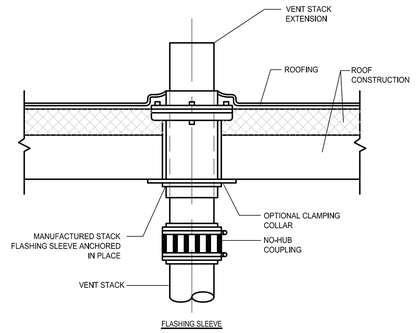

VENT THRU ROOF | SCALE NONE | 8

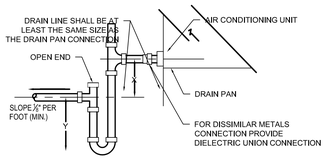

NOMINAL TONS	DRAIN LINE SIZE (IN.)
UP TO 20	3/4
21-40	1
41-90	1-1/4
91-125	1-1/2
126-250	2

BLOW THROUGH COIL
1. X=1"
2. Y=TSP+1"

DRAW THROUGH COIL
1. X=TSP+1"
2. Y= ½ (TSP+1")

TSP=TOTAL STATIC PRESSURE INSIDE DRAIN PLENUM (INCHES OF WATER COLUMN)

NOTES:

1. WHERE VERTICAL SPACE DOES NOT PERMIT TRAP INSTALLATION AS REQUIRED ABOVE FLOOR SLAB, EXTEND P-TRAP TO BELOW SLAB.
2. FOR INDOOR AND OUTDOOR INSTALLATION PROVIDE INSULATED RAIN LINE TO THE POINT OF DISCHARGE AT APPROVED RECEPTOR.

CONDENSATE DRAIN TRAP | SCALE NONE | 5

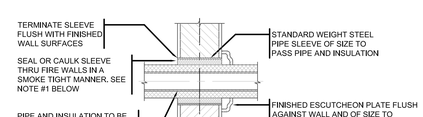

INTERIOR WALLS / FLOOR

NOTES:

1. PLUMBING PIPING PENETRATING FIRE RATED WALLS SHALL BE SEALED IN A SMOKE TIGHT MANNER WITH SEALANT MATERIAL OF THE SAME RATING OF THE WALL. FIRE BARRIER 3M MODEL PSS7904 CAL. STATE FIRE MARSHALL LISTING NO. 4485-0941:100.
2. ALL WATER PROOFING SHALL BE AS INDICATED ON ARCHITECTURAL DRAWINGS.

PIPE SLEEVE THRU WALL/FLOOR | SCALE NONE | 2

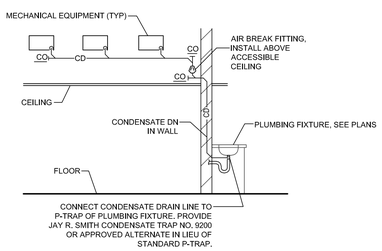

AIR BREAK FITTING | SCALE NONE | 7

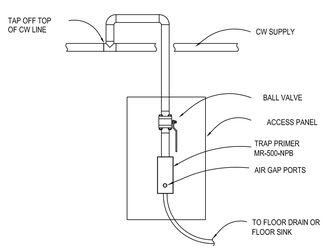

TRAP PRIMER DETAIL | SCALE NONE | 4

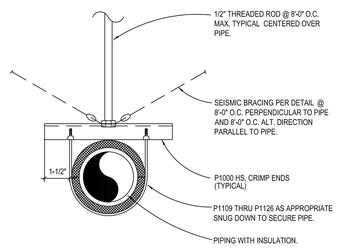

NOTE:
WHERE PIPE DOES NOT EXCEED 1" DIA. SEISMIC BRACING IS NOT REQUIRED ADDITIONALLY PIPES MAY BE SUPPORTED W/UNISTRUT J1205-J1210 AS APPROPRIATE.

PIPE SUPPORT | SCALE NONE | 1

ALFATECH
421 EAST HUNTINGTON DRIVE
MONROVIA, CA 91016
PHONE: (213) 212-9860
www.atce.com

PREPARED BY:

SVA ARCHITECTS
6 HUTTON CENTRE DR, SUITE 1150
SANTA ANA, CA 92707
T 949.809.3380 WWW.SVA-ARCHITECTS.COM

THIS DOCUMENT CONTAINS INFORMATION PROPRIETARY TO SVA ARCHITECTS INC. AND IS FURNISHED IN CONFIDENCE FOR THE LIMITED PURPOSE OF EVALUATION, BIDDING OR REVIEW. THIS DOCUMENT OR ITS CONTENTS MAY NOT BE USED FOR ANY PURPOSE OTHER THAN THE ABOVE, NOR REPRODUCED OR DISCLOSED TO OTHERS WITHOUT THE PRIOR WRITTEN CONSENT OF SVA ARCHITECTS INC. ALL RIGHTS RESERVED, © COPYRIGHT 2016.

REGISTERED PROFESSIONAL ENGINEER — NICHOLAS J. KOZIOL — No. M31713 — Exp. 6/30/2025 — MECHANICAL — STATE OF CALIFORNIA

REVISIONS

NO.	DESCRIPTION	DATE	APPROVED
1	90% CD SUBMITTAL	12/15/2022	
2	100% CD SUBMITTAL	05/01/2023	
3	FINAL SUBMITTAL	06/30/2023	

B.M.: THE CITY OF GARDENA BENCHMARK NO. SD-15 ELEV. = 43.508'

CITY OF GARDENA
DEPARTMENT OF PUBLIC WORKS - ENGINEERING

PLUMBING DETAILS

COMMUNITY AQUATICS & SENIOR CENTER
P5.01

	INITIAL	DATE	APPROVED BY:
DESIGNED BY		06/25/2022	
DRAWN BY		06/20/23	APPROVED BY: DIRECTOR OF PUBLIC WORKS
CHECKED BY		06/29/23	

SHT. 135 OF 195 DWG. NO. 5-2606

PLOT DATE: 6/30/2023 3:04:11 PM

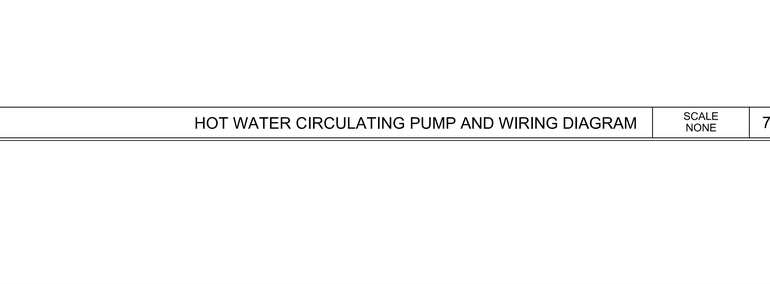

WATER HEATER DIAGRAM | SCALE NONE | 8

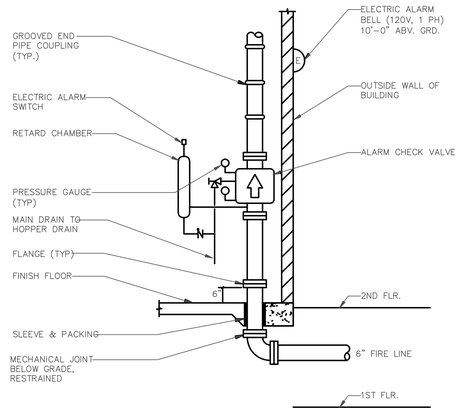

NOTES:
1. ALL REQUIRED ALARM VALVE TRIM NOT SHOWN.
2. THIS DETAIL IS FOR REFERENCE ONLY.

AUTOMATIC SPRINKLER RISER | SCALE NONE | 6

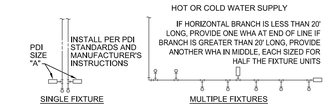

PDI SIZE | PIPE SIZE | FIXTURE UNIT LOAD
A | 1/2" | 1-11
B | 3/4" | 12-32
C | 1" | 33-60
D | 1-1/4" | 61-113
E | 1-1/2" | 114-154
F | 2" | 154-330

FIXTURE UNIT TABULATION
FIXTURE | COLD | HOT
VALVE WATER CLOSET | 5 | --
TANK WATER CLOSET | 2.5 | --
URINAL | 4 | --
LAVATORY/SINK | 1 | 1
JANITOR'S SINK | 3 | 3
LAUNDRY | 3 | 3

PROVIDE WATER HAMMER ARRESTERS. INSTALL IN HORIZONTAL OR VERTICAL POSITION, BUT NEVER UPSIDE DOWN. INSTALL IN LINE WITH WATER FLOW DIRECTION IF POSSIBLE. SIZE THE UNITS AS SHOWN ON THE DRAWINGS AND/OR PER THE TABLES SHOWN ABOVE. PROVIDE ACCESS PANEL PER CODE.

WATER HAMMER ARRESTOR | SCALE NONE | 3

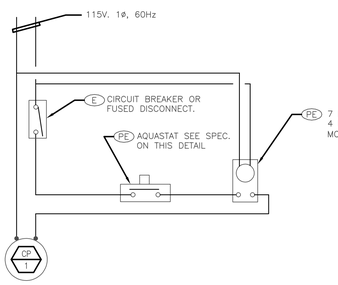

SPECIFICATION
AQUASTAT: HONEYWELL NO. L4006A
40 TO 180 DEGREE F RANGE, 5-30 DEGREE F ADJUSTABLE DIFFERENTIAL

PE FURNISHED BY PLUMBER INSTALLED BY ELECTRICAL CONTR.

E FURNISHED AND INSTALLED BY ELECTRICAL CONTR.

ALL WIRING BY ELECTRICAL CONTR.

PUMP START/STOP AQUASTAT SETTINGS (DEGREES F) :

PUMP # | START | STOP
CP-1 | 110 | 120

HOT WATER CIRCULATING PUMP AND WIRING DIAGRAM | SCALE NONE | 7

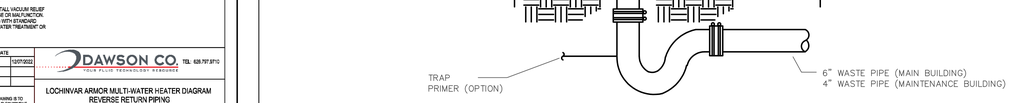

HUB DRAIN DETAIL | SCALE NONE | 5

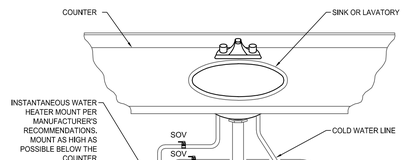

INSTANTANEOUS ELECTRIC WATER HEATER | SCALE NONE | 2

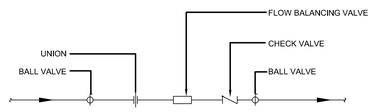

HOT WATER RETURN BALANCING VALVE | SCALE NONE | 4

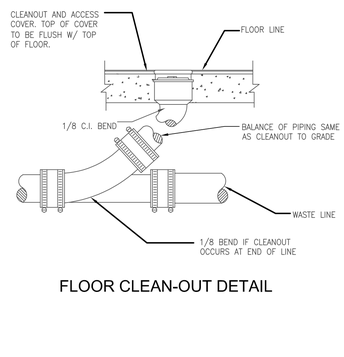

FLOOR CLEAN-OUT DETAIL

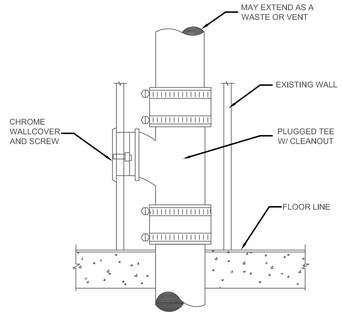

WALL CLEAN-OUT DETAIL

TYPICAL CLEANOUTS | SCALE NONE | 1

ALFATECH
421 EAST HUNTINGTON DRIVE
MONROVIA, CA 91016
PHONE: (213) 212-9860
www.atce.com

PREPARED BY:
SVA ARCHITECTS
6 HUTTON CENTRE DR, SUITE 1150
SANTA ANA, CA 92707
T 949.809.3380 WWW.SVA-ARCHITECTS.COM
THIS DOCUMENT CONTAINS INFORMATION PROPRIETARY TO SVA ARCHITECTS INC. AND IS FURNISHED IN CONFIDENCE FOR THE LIMITED PURPOSE OF EVALUATION, BIDDING OR REVIEW. THIS DOCUMENT OR ITS CONTENTS MAY NOT BE USED FOR ANY OTHER PURPOSE AND MAY NOT BE REPRODUCED OR DISCLOSED TO OTHERS WITHOUT THE PRIOR WRITTEN CONSENT OF SVA ARCHITECTS INC. ALL RIGHTS RESERVED, © COPYRIGHT 2018.

REGISTERED PROFESSIONAL ENGINEER NICHOLAS J. KOUBEK No. M31713 Exp. 6/30/2025 MECHANICAL STATE OF CALIFORNIA

REVISIONS
NO. | DESCRIPTION | DATE | APPROVED
1 | 90% CD SUBMITTAL | 12/15/2022 |
2 | 100% CD SUBMITTAL | 05/01/2023 |
3 | FINAL SUBMITTAL | 06/30/2023 |

B.M.: THE CITY OF GARDENA BENCHMARK NO. SD-15 ELEV. = 43.508'

CITY OF GARDENA
DEPARTMENT OF PUBLIC WORKS - ENGINEERING
PLUMBING DETAILS
COMMUNITY AQUATICS & SENIOR CENTER
P5.02

| INITIAL | DATE | APPROVED BY:
DESIGNED BY | | 05/25/2022 |
DRAWN BY | | 04/20/23 | APPROVED BY:
CHECKED BY | | 04/29/23 | DIRECTOR OF PUBLIC WORKS

SHT. 136 OF 195 DWG. NO. 5-2606

FILE PATH: C:\Users\...\5-2606 P5.02 PLUMBING DETAILS.dwg 6/30/2023 8:04:11 PM

PANTRY EQUIPMENT & FIXTURE SCHEDULE

UNIT TAG	ARCH TAG	DESCRIPTION	ROUGH-IN SIZE WASTE	VENT	CW	HW	REMARKS
SK-1	-	SINGLE COMPARTMENT SINK	2"	2"	3/4"	3/4"	REFER TO ARCHITECTURAL DRAWINGS FOR FULL SPECIFICATIONS. PROVIDE APPROVED DOUBLE CHECK VALVE.
SK-2	-	DROP-IN SINK DOUBLE BOWL	2"	2"	3/4"	3/4"	REFER TO ARCHITECTURAL DRAWINGS FOR FULL SPECIFICATIONS. PROVIDE APPROVED DOUBLE CHECK VALVE.
GD-1	-	GARBAGE DISPOSAL	-	-	-	-	REFER TO ARCHITECTURAL DRAWINGS FOR FULL SPECIFICATIONS. PROVIDE APPROVED DOUBLE CHECK VALVE.
REF-1	-	REFRIGERATOR	-	-	1/2"	-	PROVIDE IPS CORP. #FRMB12ABSHA: ICE MACHINE BOX WITH LEAD FREE QUARTER VALVE WITH WATER HAMMER ARRESTOR
IM-1	-	ICE MACHINE	1/2" IW	-	1/2" FCW	-	PROVIDE IPS CORP. #FRMB12ABSHA: ICE MACHINE BOX WITH LEAD FREE QUARTER VALVE WITH WATER HAMMER ARRESTOR
CM-1	-	COFFEE MAKER	-	-	1/2" FCW	-	REFER TO ARCHITECTURAL DRAWINGS FOR FULL SPECIFICATIONS. PROVIDE APPROVED DOUBLE CHECK VALVE.
DW-1	-	DISHWASHER	-	-	-	-	REFER TO ARCHITECTURAL DRAWINGS FOR FULL SPECIFICATIONS. PROVIDE APPROVED DOUBLE CHECK VALVE.

NOTES:
1. REFERENCE ONLY. REFER TO ARCHITECTURAL FOR FULL SCHEDULE AND EXACT EQUIPMENT LOCATIONS.
2. REFER TO ARCHITECTURAL DWG AND MANUFACTURES' INSTALLATION MANUAL FOR INSTALLATION DETAILS.

CIRCULATOR PUMP SCHEDULE

SYMBOL	DESCRIPTION	LOCATION	MANUFACTURER & MODEL NO.	DESIGN POINT GPM	HEAD (FEET)	PUMP EFF. (%)	MOTOR HP	VOL.	PH.	FREQ. (HERTZ)	REMARKS
CP 1	DOMESTIC RE-CIRCULATION PUMP (140°F)	STORAGE RM #106	BELL & GOSSETT ECOCIRC XL 20-35	1	-	0	1/12	115	1	60	IN-LINE STAINLESS STEEL; WITH AQUASTAT CONTROLLER, CHECK VALVE, METRAFLEX LPD-MAAG FILTER AND FLOW CONTROL VALVE.

NOTES:

TANK SCHEDULE

SYMBOL	DESCRIPTION/ SERVICE	MANUFACTURER & MODEL NO.	STORAGE (GALLON)	ASME	WORKING PRESSURE RATING	CONFIGURATION	OPERATING WEIGHT	REMARKS
ST 1	DOMESTIC HOT WATER SYSTEM STORAGE TANK	LOCHINVAR #RGA318	318	YES	ASME 150 PSI	VERTICAL	987 LBS.	VERTICAL TANK. PROVIDE SEISMIC STRAPS.
ET 1	DOMESTIC HOT WATER SYSTEM EXPANSION TANK	AMTROL ST-5C-DD	2	YES	ASME 150 PSI	VERTICAL	26.66 LBS.	ASME RATED

NOTES:
1. PROVIDE SEISMIC ATTACHMENT CLIP.
2. 5 YEAR LIMITED WARRANTY.
3. PROVIDE BRASS P&T RELIEF VALVE RATED TO 150 PSI.
4. PROVIDE TEMPERATURE SENSOR WITHIN 3/4" BULBWELL..
5. PROVIDE WITH MAGNESIUM ANODE RODS AND MANWAY.
6. PROVIDE OUTDOOR RATED FOAM INSULATION.
7. INSTALL TANK SENSOR, FACTORY SUPPLIED & SHIPPED LOOSE, IN THE TAPPING PROVIDED IN THE LOWER 25% OF THE STORAGE TANK TO ACHIEVE PROPER OPERATION.
- WIRE TANK 1 SENSOR TO THE LEAD WATER HEATER CONTROLLER.
- ALLOW FOR MULTI-MASTER OPERATION

PLUMBING FIXTURE SCHEDULE

UNIT TAG	UNIT TAG	DESCRIPTION	MINIMUM CONN. WASTE	VENT	CW	HW	REMARKS
WC-1	-	WATER CLOSET	4"	2"	1-1/2"	-	AMERICAN STANDARD AFWALL "MILLENNIUM FLOWISE #2257.101: WALL MOUNTED, VITREOUS CHINA, ELONGATED FLUSHOMETER TOILET, TOP SPUD, WHITE FINISH. SLOAN "ROYAL" #111 ESS-1.28-TMO-HW: 1.28 GPF SENSOR FLUSHVALVE. J.R. SMITH 200 OR 400 SERIES FLOOR ANCHORED CARRIER.
WC-2	-	WATER CLOSET - ADA	4"	2"	1-1/2"	-	SAME AS WC-1 EXCEPT INSTALL AT ADA APPROVED HEIGHT
UR-1	-	URINAL - ADA	0'-2"	1-1/2"	1-1/4"	-	AMERICAN STANDARD WASHBROOK #6590.001: WALL MOUNTED, VITREOUS CHINA, TOP SPUD, WHITE FINISH. SLOAN "ROYAL" #186 ESS-0.125-DBP-TMO-HW: 0.125 GPF SENSOR FLUSHVALVE. J.R. SMITH FLOOR ANCHORED CARRIER. INSTALL AT ADA APPROVED HEIGHT.
L-1	-	LAVATORY - ADA	2"	1-1/2"	3/4"	3/4"	AMERICAN STANDARD LUCERNE #0.356.421: WALL MOUNTED, VITREOUS CHINA, SINGLE HOLE PUNCH. SLOAN "OPTIMA" EAF-200 PLG-ITM-CP-0.35GPM-MLM-IR-IQ-FCT: 0.35 GPM SENSOR FAUCET, PROVIDE WITH TMV-.2. J.R. SMITH FLOOR ANCHORED CARRIER. INSTALL AT ADA APPROVED HEIGHT.
SH-1	-	SHOWER - ADA	2"	1-1/2"	3/4"	3/4"	SYMMONS #C-96-500-B30-V-X-1.5: 1.5 GPM. PROVIDE WITH TMV-2
SH-2	-	SHOWER (PUBLIC)	2"	1-1/2"	3/4"	3/4"	ACORN #1741FA-04-M-8-EVSP2: WALL MOUNTED PNEUTRONIC 1.5 GPM 14 GAUGE TYPE 304 STAINLESS STEEL SHOWER. PROVIDE WITH TMV-2
SH-3	-	SHOWER - ADA (PUBLIC)	2"	1-1/2"	3/4"	3/4"	SAME AS SH-3 EXCEPT USE #450BADAWH INSTALL AT ADA APPROVED HEIGHT. PROVIDE WITH TMV-2
SH-4	-	SHOWER - ADA (PUBLIC)	2	1-1/2"	3/4"	3/4"	ACORN #110ADA-1-1-8-W-EVS1: 1.5 GPM. PROVIDE WITH TMV-2
HS-1	-	HAND SINK - ADA	2"	1-1/2"	3/4"	3/4"	WILLOUGHBY #CES-912: WALL MOUNTED 16 GAUGE TYPE 304 STAINLESS STEEL FIXTURE. CHICAGO FAUCET #EVR-A12D-43ABCP: 0.35 GPM SENSOR FAUCET. PROVIDE WITH TMV-2. INSTALL AT ADA APPROVIDE HEIGHT.
SS-1	-	SERVICE SINK	3"	2"	3/4"	3/4"	AMERICAN STANDARD FLORWELL #7741.000: FLOOR MOUNTED CORNER TYPE. CHICAGO FAUCET #897-RCF: WALL MOUNTED FAUCET WITH WALL BRACE AND VACUUM BREAKER.
DF-1	-	DRINKING FOUNTAIN (HI-LI)	2"	2"	3/4"	-	ELKAY EZWS-ERPBM28K: PROVIDE WITH BOTTLE FILLER AND 8 GPH CHILLER. 115/1/60
HB-1	-	HOSE BIBB (WALL)	-	-	3/4"	-	ACORN #8151-SSLF: PROVIDE WITH NON-REMOVABLE VACUUM BREAKER.
HB-2	-	HOSE BIBB (ROOF)	-	-	3/4"	-	ACORN #8126CR-LF: PROVIDE WITH NON-REMOVABLE VACUUM BREAKER.
ESEW-1	-	EMERGENCY EYEWASH/SHOWER	2"	2"	1-1/4"	1-1/4"	GUARDIAN #GBF1994: BARRIER FREE
LDS-1	-	LEAK DETECTION SYSTEM	-	-	-	-	FLOODSTOP FS3/4NPT EMERGENCY WATER LEAK DETECTION AND SHUT OFF SYSTEM WITH ONE STRAIGHT VALVE. PROVIDE EXTRA WATER SENSOR AND SENSOR MANIFOLD AS NECESSARY.
LDS-2	-	LEAK DETECTION SYSTEM	-	-	-	-	FLOODSTOP FS3/4H EMERGENCY WATER LEAK DETECTION AND SHUT OFF SYSTEM WITH TWO STRAIGHT VALVES. PROVIDE EXTRA WATER SENSOR AND SENSOR MANIFOLD AS NECESSARY.
FD-1	-	FLOOR DRAIN	2"	2"	1/2"TP	-	J.R SMITH 2005-Y-B SERIES WITH ADJUSTABLE SQUARE NICKEL BRONZE STRAINER & TRAP PRIMER CONNECTION, OR EQUAL.
FD-2	-	SHOWER DRAIN	2"	2"	-	-	SAME AS FD-1 EXCEPT LESS TRAP PRIMER CONNECTION.
FS-1	-	FLOOR SINK	3"	2"	1/2"TP	-	J.R. SMITH #3100Y-C-U-CI: DUCO CAST IRON BODY, FLASHING CLAMP, VANDAL PROOF SCREWS, 1/2 OR 3/4 GRATE. PROVIDE WITH TRAP PRIMER CONNECTION.
FD-3	-	FLOOR DRAIN	6"	4"	1/2"TP	-	J.R. SMITH #6060Y-C-U-: STAINLESS STEEL BODY, FLASHING CLAMP, VANDAL PROOF SCREWS, FULL GRATE. PROVIDE WITH TRAP PRIMER CONNECTION.
RD-1	-	ROOF DRAIN	SEE PLANS FOR SIZES				J.R. SMITH 1010Y: DUCO CAST IRON BODY
OD-1	–	OVERFLOW DRAIN	SEE PLANS FOR SIZES				J.R. SMITH 1080Y: DUCO CAST IRON BODY WITH 2" WATER DAM
TP-1	-	TRAP PRIMER	-	-	1/2"	-	MIFAB MR-500-NPB ALL BRASS CONSTRUCTION, PRESSURE DRIP ACTIVATION, WITH AIR GAP, DISTRIBUTION UNIT AND ACCESS PANEL.
TP-2	-	TRAP PRIMER (ELECTRONIC)	-	-	1/2"	–	MIFAB MI-300-120-VAC, ELECTRONIC TRAP SEAL PRIMER WITH AIR GAP, DISTRIBUTION UNIT AND CONTROL PANEL.
WHA-1	-	WATER HAMMER ARRESTOR	-	-	1/2"	-	MIFAB #WHB, BELLOWS TYPE, OR APPROVED EQUAL.
TMV-1	-	TEMPERATURE MIXTURE VALVE WATER HEATER	-	-	3/4"	-	HEAT TIMER #ETV 915671-00: 3/4" VALVE. 17.84 GPM FLOW RATE. 6 PSI DROP. MAXIMUM WORKING PRESSURE 225. PROVIDE WITH TMC MOTORIZED VALVE #920541-00. CONTROL ASSEMBLY #915671-BAC.
TMV-2	-	TEMPERATURE MIXTURE VALVE LAVATORIES/HAND SINK/SHOWER	-	-	1/2"	-	WATTS MODEL LFUSG-B-M2 POINT OF USE TEMPERATURE MIXING VALVE. TEMPERATURE SET AT 110°F, ASSE 1070 LISTED.
TMV-3	-	TEMPERATURE MIXING VALVE EMERGENCY EYEWASH/SHOWER	-	-	-	-	WATTS POWERS HYDROGUARD XP SERIES EMERGENCY TEMPERATING MIXING VALVE WITH COLD WATER BYPASS, MODEL ES150, ASSE 1071 LISTED.

NOTES:
1. REFER TO ARCHITECTURAL FOR FULL SCHEDULE AND EXACT EQUIPMENT LOCATIONS.
2. REFER TO ARCHITECTURAL DWG AND MANUFACTURES' INSTALLATION MANUAL FOR INSTALLATION DETAILS.

GAS WATER HEATER SCHEDULE

MARK	MANUFACTURE & MODEL NUMBER	AREA SERVED	LOCATION	INCOMING WATER TEMP.	STORAGE TEMP.	TEMP. RISE	STORAGE CAPACITY	RECOVERY @ 100° F RISE	FUEL TYPE	GAS INPUT DATA BTU/HR	ELEC.	THERMAL EFFICIENCY %	OPER. WEIGHT LBS.	REMARKS
WH 1	LOCHINVAR ARMOR #AWN286PM	DOMESTIC WATER SYSTEM	STORAGE RM #106	60° F	140° F	80° F	-	332	NATURAL GAS	285	12OV 1PH 60HZ	96	280	-

NOTES:
1. PROVIDE T&P RELIEF VALVE RATED AT 150 PSI.
2. UPSIZED WATER HEATER PUMP SHIPPED LOOSE, PIPED AND WIRED BY OTHERS. WATER HEATER CONTROLLER WILL ENABLE/DISABLE, AND PUMP POWERED BY WATER HEATER. UPSIZED PUMPS ARE FOR APPLICATIONS WITH 12-15 GPG WATER HARDNESS. PUMP PART # 100166409 ELECTRICAL 3/4 HP
3. PROVIDE WITH CONDENSATE NEUTRALIZATION KIT.
4. PROVIDE CONCRETE PAD.
5. PROVIDE FACTORY SUPPLIED 5# OR 2# TO 14" WC NON-VENTED GAS REGULATOR TO UNIT.
6. PROVIDE "NO SALT CONDITIONER" (EASYWATER) AS THE WATER CONDITIONER. SEE DETAIL #/?? FOR LOCATION OF EQUIPMENT.
7. ALL LOW VOLTAGE CONTROL AND SENSOR CABLE SHALL BE 24 AWG SHIELDED / A,B TWISTED PAIR CABLE. CONTROLS TO BE MSTP, AND BOILERS TO HAVE MULTI-MASTER FUNCTION.
8. LEAD LAG OR PARALLEL MODULATION, ALTERNATION, MULTI-MASTER WITH ON BOARD CONTROLLER.
9. PROVIDE BMS GATEWAY TO BACNET IP.
5. PROVIDE POLYPROPYLENE VENT PIPE WITH ADAPTOR AND RAIN CAP.

INSTANTANEOUS ELECTRIC WATER HEATER SCHEDULE

MARK	MANUFACTURE & MODEL NUMBER	AREA SERVES	RECOVERY	ACTIVATION GPM	ELECTRICAL DATA V/PH/Hz	AMPS	WATTS	REMARKS
EWH-1	CHRONOMITE CM-20L277	LAVATORY	38° RISE @ 1 GPM	0.20	277/1/60	29	5540	ELECTRIC TANKLESS WATER HEATER. 110°F MAXIMUM OUTPUT TEMPERATURE. INSTALL HAMMER ARRESTER ON CW SUPPLY. COORDINATE WITH ELECTRICAL INSTALLER FOR POWER CONNECTION. PROVIDE SOV AT CW INLET & HW OUTLET.
EWH-2	CHRONOMITE ERB-360L/208_3P	EMERGENCY SHOWER/EYEWASH	26° RISE @ 20 GPM	2.60	208/3/60	208	75000	ELECTRIC TANKLESS WATER HEATER. 110°F MAXIMUM OUTPUT TEMPERATURE. COORDINATE WITH ELECTRICAL INSTALLER FOR POWER CONNECTION. PROVIDE SOV AT CW INLET & HW OUTLET.

MISCELLANEOUS EQUIPMENT SCHEDULES

UNIT TAG	DESCRIPTION	MINIMUM CONN. WASTE	VENT	DCW ICW	DHW IHW	REMARKS
BV-1	BALANCING VALVE	-	-	-	3/4" DHWR	REFER TO KITCHEN DWG FOR FULL DETAILS. DISCHARGE TO FS-1
GPR-1	GAS PRESSURE REGULATOR	-	-	-	-	3/4" SIZE
GPR-2	GAS PRESSURE REGULATOR	-	-	-	-	3/4" SIZE
GPR-3	GAS PRESSURE REGULATOR	-	-	-	-	1-1/4" SIZE
SV-1	SEISMIC VALVE	-	-	-	-	PACIFIC SEISMIC #312: 1-1/4" SIZE
BFP-1	BACKFLOW PREVENTER	-	-	2" DCW	-	WATTS LF009:

NOTE:
1. LAB FIXTURES SCHEDULE IS SHOWN FOR REFERENCE ONLY. REFER TO ARCHITECTURAL/LAB CONSULTANT DRAWINGS FOR FULL SCHEDULE AND EXACT EQUIPMENT LOCATIONS.
2. REFER TO FLOOR PLAN FOR DOMESTIC OR INDUSTRIAL WATER SYSTEM REQUIREMENT AT LAB SINKS.
3. INDIRECT WASTE (IW) SHALL DISCHARGE TO SANITARY WASTE SYSTEM THROUGH FLOOR SINK WITH AIR GAP PER CPC REQUIREMENT UNLESS NOTED OTHERWISE.

ALFATECH
421 EAST HUNTINGTON DRIVE
MONROVIA, CA 91016
PHONE: (213) 212-9860
www.atce.com

CITY OF GARDENA · FREEWAY CITY · INCORPORATED 1930

PREPARED BY:
SVA ARCHITECTS
6 HUTTON CENTRE DR, SUITE 1150
SANTA ANA, CA 92707
T 949.809.3380 WWW.SVA-ARCHITECTS.COM

THIS DOCUMENT CONTAINS INFORMATION PROPRIETARY TO SVA ARCHITECTS INC. AND IS FURNISHED IN CONFIDENCE FOR THE LIMITED PURPOSE OF EVALUATION, BIDDING OR REVIEW. THIS DOCUMENT OR ITS CONTENTS MAY NOT BE USED FOR ANY OTHER PURPOSE AND MAY NOT BE REPRODUCED OR DISCLOSED TO OTHERS WITHOUT THE PRIOR WRITTEN CONSENT OF SVA ARCHITECTS INC. ALL RIGHTS RESERVED, © COPYRIGHT 2018.

REGISTERED PROFESSIONAL ENGINEER · NIKOLAOS J. KOURASSIS · No. M31713 · Exp. 6/30/2025 · MECHANICAL · STATE OF CALIFORNIA

REVISIONS

NO.	DESCRIPTION	DATE	APPROVED
1	90% CD SUBMITTAL	12/15/2022	
2	100% CD SUBMITTAL	05/01/2023	
3	FINAL SUBMITTAL	06/30/2023	

B.M.: THE CITY OF GARDENA BENCHMARK NO. 5D-15 ELEV. = 43.508'

CITY OF GARDENA
DEPARTMENT OF PUBLIC WORKS - ENGINEERING
PLUMBING SCHEDULES
COMMUNITY AQUATICS & SENIOR CENTER
P6.01

	INITIAL	DATE
DESIGNED BY		05/25/2022
DRAWN BY		06/20/23
CHECKED BY		06/29/23

APPROVED BY:
APPROVED BY: DIRECTOR OF PUBLIC WORKS

FILE PATH:
PLOT TIME: 5/20/2022 5:04:11 PM

NOTES:

1. APPLIANCE AND FIXTURES LOCATIONS AND SPECIFICATIONS MAY VARY FROM THE ACTUAL CONDITION. REFER TO ARCHITECTURAL DWGS. FOR EXACT LOCATIONS OF APPLIANCES AND PLUMBING FIXTURES.

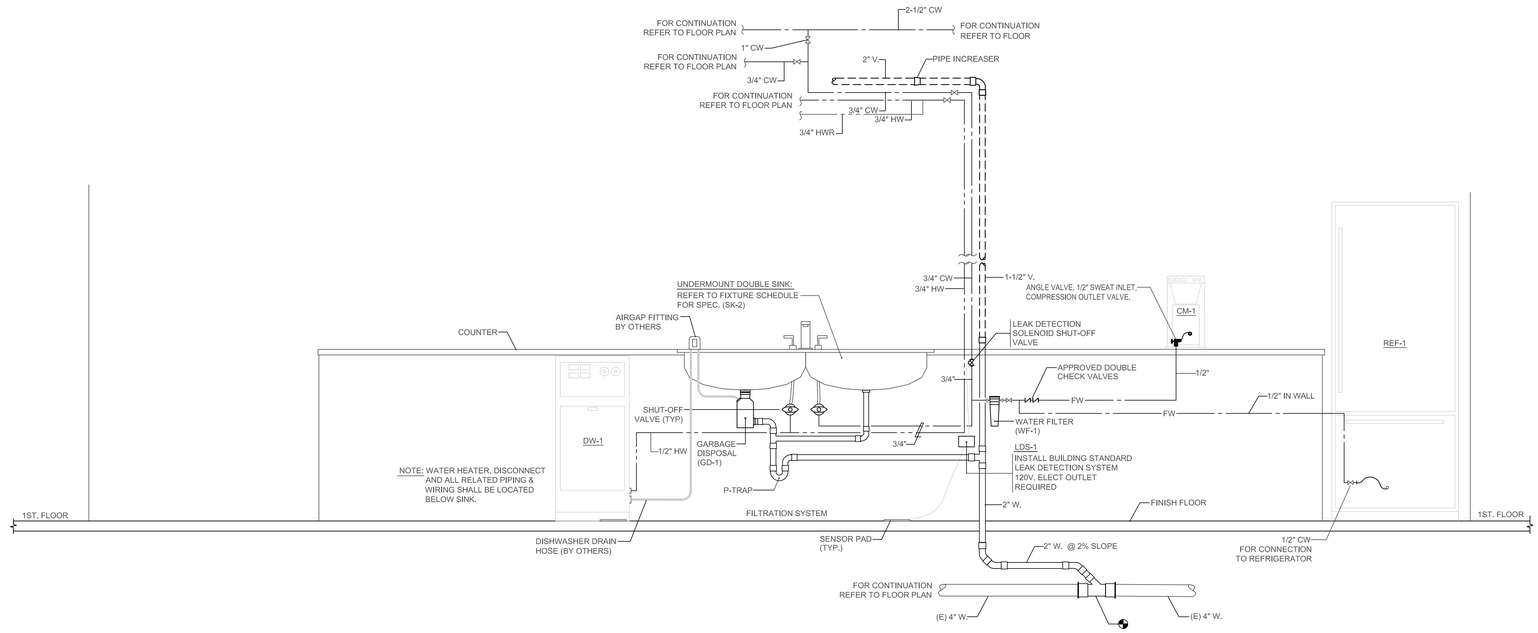

1 KITCHEN AREA SCHEMATIC

NTS

ALFATECH
421 EAST HUNTINGTON DRIVE
MONROVIA, CA 91016
PHONE: (213) 212-9860
www.atce.com

PREPARED BY:

SVA ARCHITECTS

6 HUTTON CENTRE DR, SUITE 1150
SANTA ANA, CA 92707
T 949.809.3380 WWW.SVA-ARCHITECTS.COM

THIS DOCUMENT CONTAINS INFORMATION PROPRIETARY TO SVA ARCHITECTS INC. AND IS FURNISHED IN CONFIDENCE FOR THE LIMITED PURPOSE OF EVALUATION, BIDDING OR REVIEW. THIS DOCUMENT OR ITS CONTENTS MAY NOT BE USED FOR ANY OTHER PURPOSE AND MAY NOT BE REPRODUCED OR DISCLOSED TO OTHERS WITHOUT THE PRIOR WRITTEN CONSENT OF SVA ARCHITECTS INC. ALL RIGHTS RESERVED. © COPYRIGHT 2018.

REGISTERED PROFESSIONAL ENGINEER — NICHOLAS J. KOUNTIS — No. M31713 — Exp. 6/30/2025 — MECHANICAL — STATE OF CALIFORNIA

REVISIONS			
NO.	DESCRIPTION	DATE	APPROVED
1	90% CD SUBMITTAL	12/15/2022	
2	100% CD SUBMITTAL	05/01/2023	
3	FINAL SUBMITTAL	06/30/2023	

B.M.: THE CITY OF GARDENA BENCHMARK NO. SD-15 ELEV. = 43.508'

	INITIAL	DATE
DESIGNED BY		06/25/2022
DRAWN BY		06/20/23
CHECKED BY		06/29/23

CITY OF GARDENA
DEPARTMENT OF PUBLIC WORKS - ENGINEERING

PLUMBING SCHEMATICS

COMMUNITY AQUATICS & SENIOR CENTER

P7.01

APPROVED BY:

APPROVED BY: DIRECTOR OF PUBLIC WORKS

SHT. 138 OF 195 DWG. NO. S-2606

PLOT DATE: 6/30/2023 3:04:17 PM

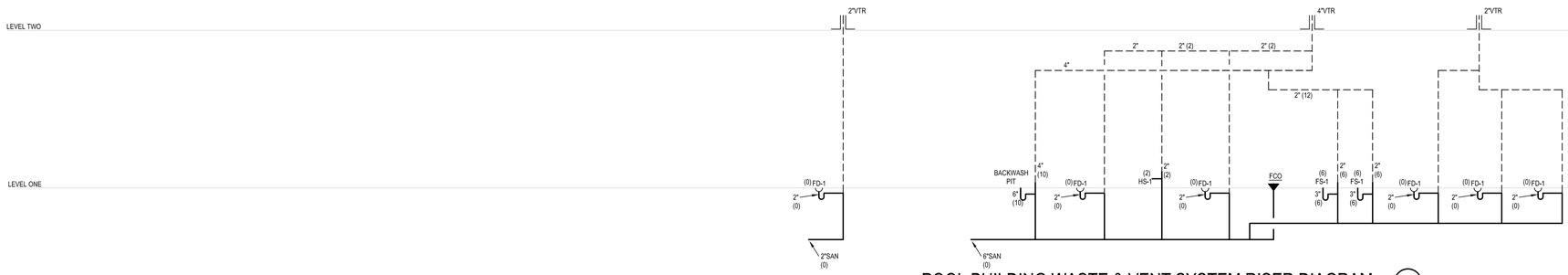

POOL BUILDING WASTE & VENT SYSTEM RISER DIAGRAM (3)

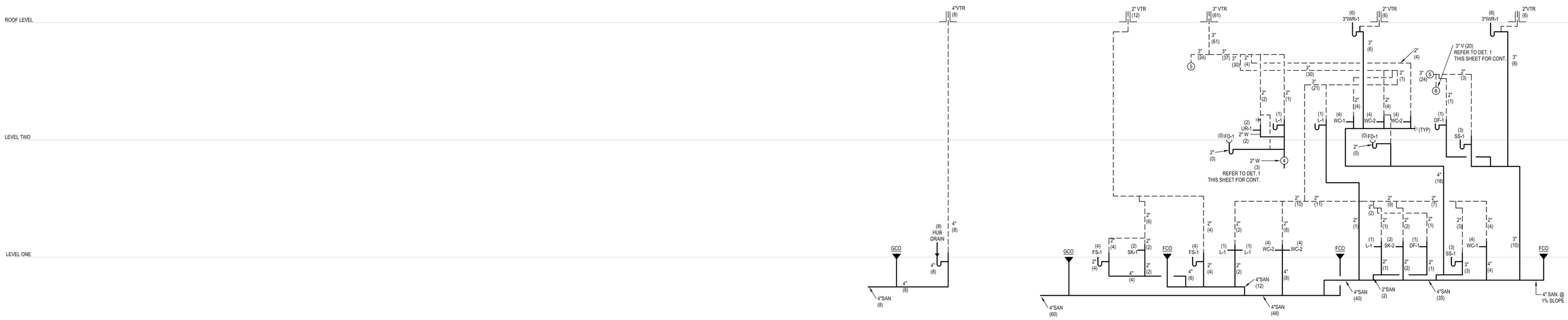

SENIOR CENTER & FACALITIES BUILDING WASTE & VENT SYSTEM RISER DIAGRAM - CONT (2)

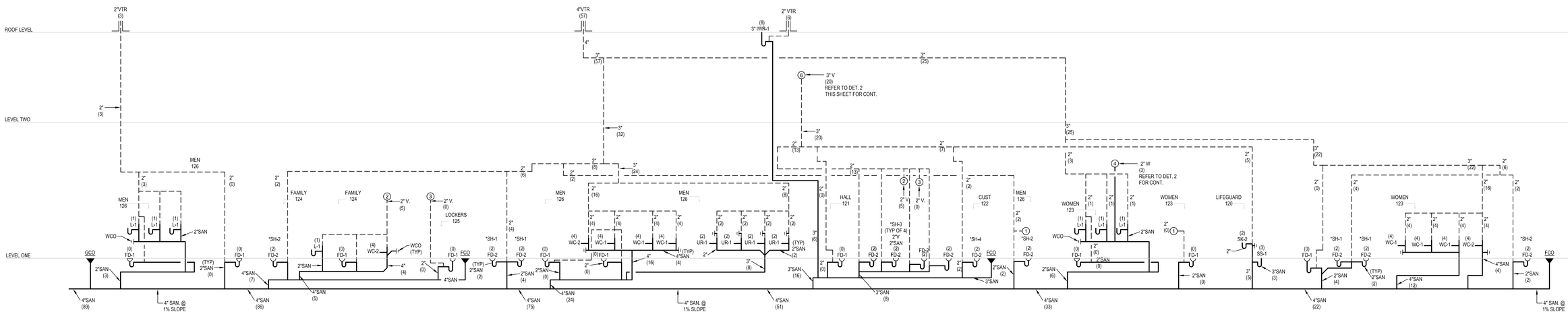

SENIOR CENTER & FACALITIES BUILDING WASTE & VENT SYSTEM RISER DIAGRAM (1)

ALFATECH
421 EAST HUNTINGTON DRIVE
MONROVIA, CA 91016
PHONE: (213) 212-9860
www.atce.com

PREPARED BY:
SVA ARCHITECTS
6 HUTTON CENTRE DR. SUITE 1150
SANTA ANA, CA 92707
T 949.809.3380 WWW.SVA-ARCHITECTS.COM

THIS DOCUMENT CONTAINS INFORMATION PROPRIETARY TO SVA ARCHITECTS AND IS SUBMITTED IN CONFIDENCE FOR THE LIMITED PURPOSE OF EVALUATION, BIDDING OR REVIEW. THIS DOCUMENT OR ITS CONTENTS MAY NOT BE USED FOR ANY OTHER PURPOSE AND MAY NOT BE REPRODUCED OR DISCLOSED TO OTHERS WITHOUT THE PRIOR WRITTEN CONSENT OF SVA ARCHITECTS INC. ALL RIGHTS RESERVED. © COPYRIGHT 2018.

REGISTERED PROFESSIONAL ENGINEER — NICHOLAS J. KOUNTERS — No. M31713 — Exp. 6/30/2025 — MECHANICAL — STATE OF CALIFORNIA

REVISIONS

NO.	DESCRIPTION	DATE	APPROVED
1	90% CD SUBMITTAL	12/15/2022	
2	100% CD SUBMITTAL	05/01/2023	
3	FINAL SUBMITTAL	04/30/2023	

B.M.: THE CITY OF GARDENA BENCHMARK NO. SD-15 ELEV. = 43.508'

CITY OF GARDENA
DEPARTMENT OF PUBLIC WORKS - ENGINEERING
PLUMBING WASTE & VENT RISER DIAGRAM
COMMUNITY AQUATICS & SENIOR CENTER
P8.01

	INITIAL	DATE
DESIGNED BY		05/25/2022
DRAWN BY		04/20/23
CHECKED BY		04/29/23

APPROVED BY: DIRECTOR OF PUBLIC WORKS

SHT. 139 OF 195 DWG. NO. 5-2606

PLOT DATE: 5/30/2023 8:54:11 PM

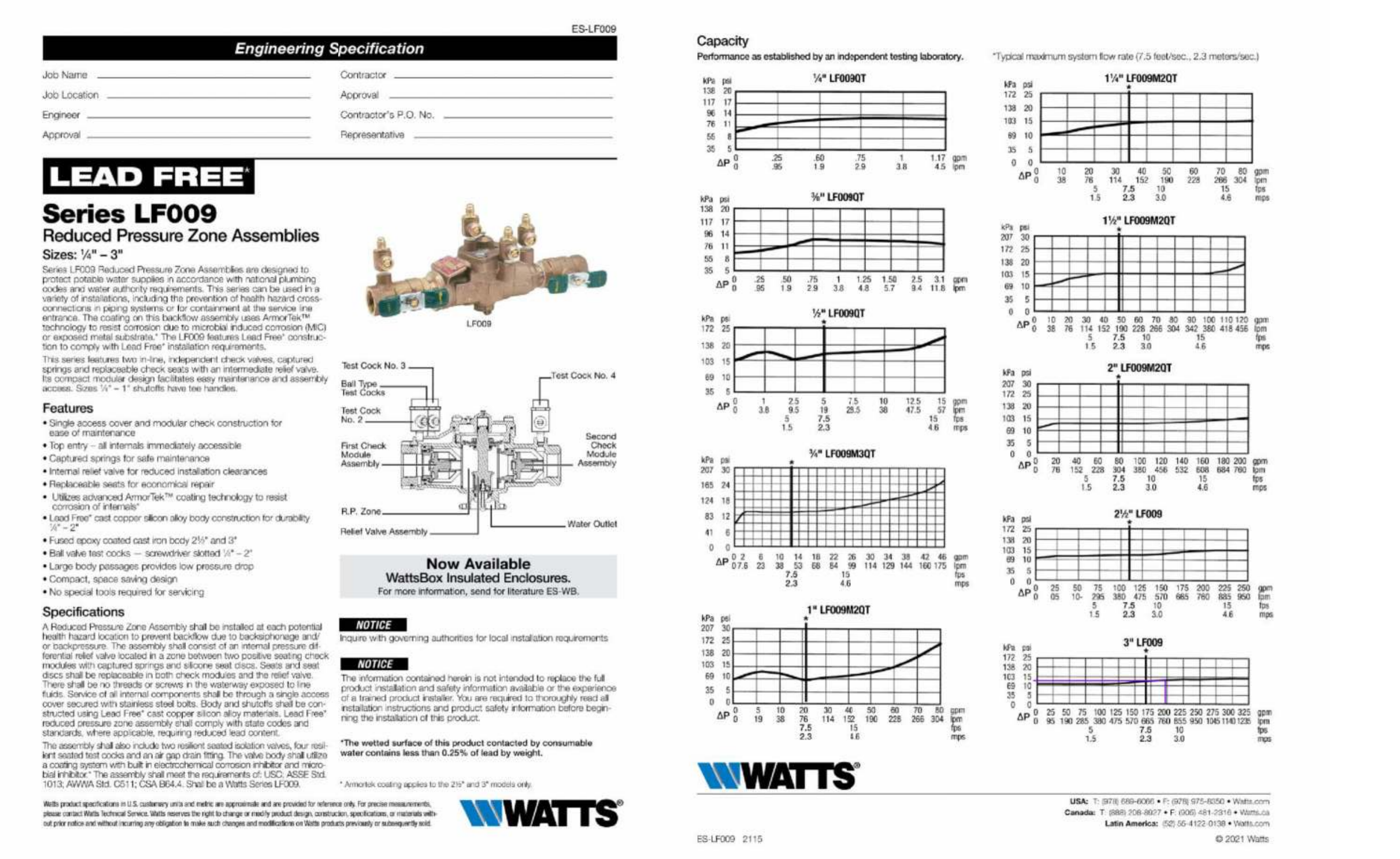

ES-LF009

Engineering Specification

Job Name — Contractor
Job Location — Approval
Engineer — Contractor's P.O. No.
Approval — Representative

LEAD FREE

Series LF009
Reduced Pressure Zone Assemblies
Sizes: ¼" – 3"

Series LF009 Reduced Pressure Zone Assemblies are designed to protect potable water supplies in accordance with national plumbing codes and water authority requirements. This series can be used in a variety of installations, including the prevention of health hazard cross-connections in piping systems or for containment at the service line entrance. The coating on this backflow assembly uses ArmorTek™ technology to resist corrosion due to microbial induced corrosion (MIC) or exposed metal substrate.* The LF009 features Lead Free* construction to comply with Lead Free* installation requirements.

This series features two in-line, independent check valves, captured springs and replaceable check seats with an intermediate relief valve. Its compact modular design facilitates easy maintenance and assembly access. Sizes ¼" – 1" shutoffs have tee handles.

Features
- Single access cover and modular check construction for ease of maintenance
- Top entry – all internals immediately accessible
- Captured springs for safe maintenance
- Internal relief valve for reduced installation clearances
- Replaceable seats for economical repair
- Utilizes advanced ArmorTek™ coating technology to resist corrosion of internals*
- Lead Free* cast copper silicon alloy body construction for durability ¼" – 2"
- Fused epoxy coated cast iron body 2½" and 3"
- Ball valve test cocks — screwdriver slotted ¼" – 2"
- Large body passages provides low pressure drop
- Compact, space saving design
- No special tools required for servicing

Specifications

A Reduced Pressure Zone Assembly shall be installed at each potential health hazard location to prevent backflow due to backsiphonage and/or backpressure. The assembly shall consist of an internal pressure differential relief valve located in a zone between two positive seating check modules with captured springs and silicone seat discs. Seats and seat discs shall be replaceable in both check modules and the relief valve. There shall be no threads or screws in the waterway exposed to line fluids. Service of all internal components shall be through a single access cover secured with stainless steel bolts. Body and shutoffs shall be constructed using Lead Free* cast copper silicon alloy materials. Lead Free* reduced pressure zone assembly shall comply with state codes and standards, where applicable, requiring reduced lead content.

The assembly shall also include two resilient seated isolation valves, four resilient seated test cocks and an air gap drain fitting. The valve body shall utilize a coating system with built in electrochemical corrosion inhibitor and microbial inhibitor.* The assembly shall meet the requirements of: USC; ASSE Std. 1013; AWWA Std. C511; CSA B64.4. Shall be a Watts Series LF009.

Now Available
WattsBox Insulated Enclosures.
For more information, send for literature ES-WB.

NOTICE
Inquire with governing authorities for local installation requirements.

NOTICE
The information contained herein is not intended to replace the full product installation and safety information available or the experience of a trained product installer. You are required to thoroughly read all installation instructions and product safety information before beginning the installation of this product.

*The wetted surface of this product contacted by consumable water contains less than 0.25% of lead by weight.

* Armortek coating applies to the 2½" and 3" models only.

Capacity
Performance as established by an independent testing laboratory. *Typical maximum system flow rate (7.5 feet/sec., 2.3 meters/sec.)

WATTS

USA: T: (978) 689-6066 • F: (978) 975-8350 • Watts.com
Canada: T: (888) 208-8927 • F: (905) 481-2316 • Watts.ca
Latin America: (52) 55-4122-0138 • Watts.com

ES-LF009 2115 © 2021 Watts

BACKFLOW PREVENTER | SCALE NONE | 4

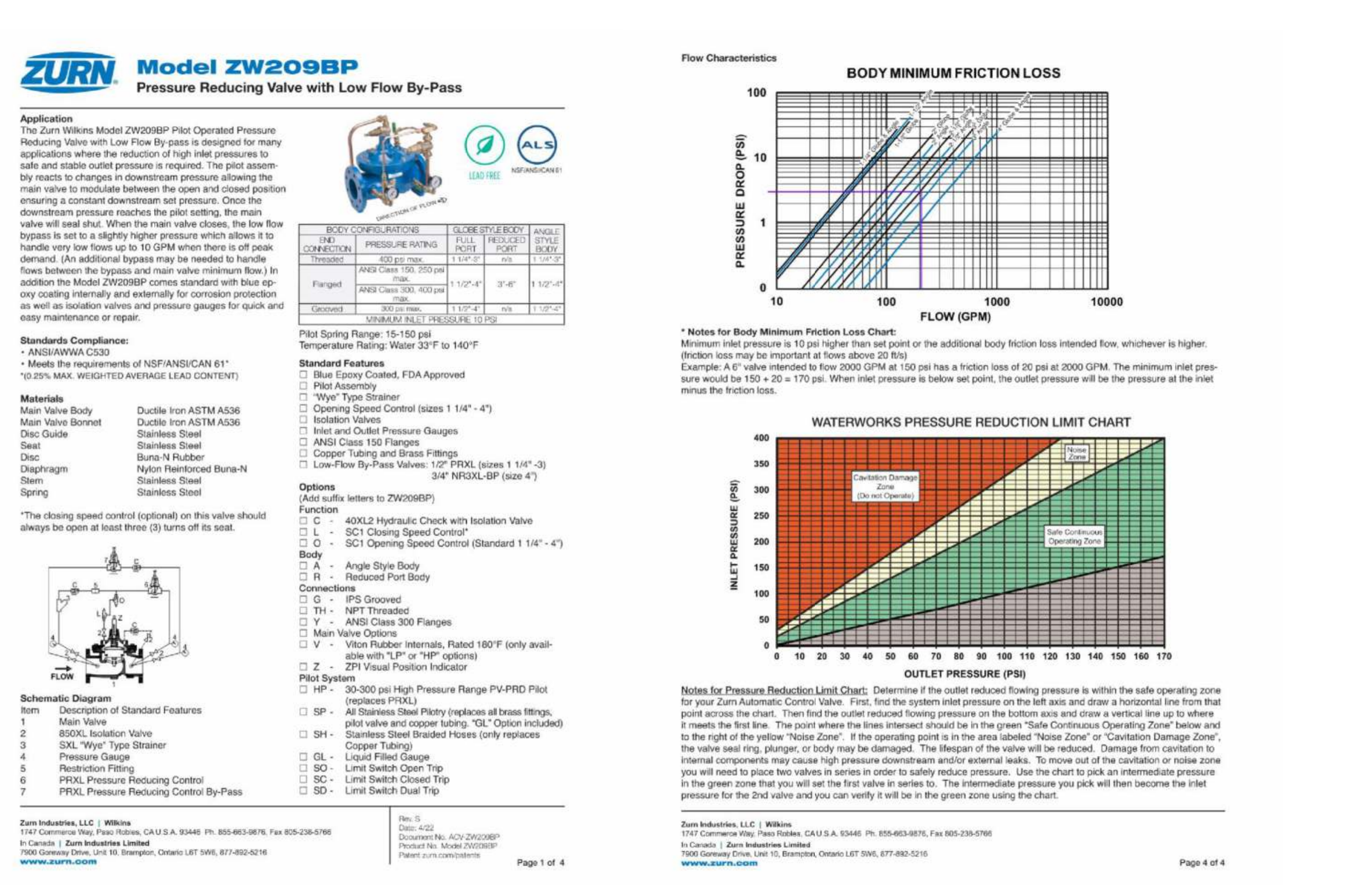

ZURN **Model ZW209BP**
Pressure Reducing Valve with Low Flow By-Pass

Application
The Zurn Wilkins Model ZW209BP Pilot Operated Pressure Reducing Valve with Low Flow By-pass is designed for many applications where the reduction of high inlet pressures to safe and stable outlet pressure is required. The pilot assembly reacts to changes in downstream pressure allowing the main valve to modulate between the open and closed position ensuring a constant downstream set pressure. Once the downstream pressure reaches the pilot setting, the main valve will seal shut. When the main valve closes, the low flow bypass is set to a slightly higher pressure which allows it to handle very low flows up to 10 GPM when there is off peak demand. (An additional bypass may be needed to handle flows between the bypass and main valve minimum flow.) In addition the Model ZW209BP comes standard with blue epoxy coating internally and externally for corrosion protection as well as isolation valves and pressure gauges for quick and easy maintenance or repair.

Standards Compliance:
- ANSI/AWWA C530
- Meets the requirements of NSF/ANSI/CAN 61*
*(0.25% MAX. WEIGHTED AVERAGE LEAD CONTENT)

Materials

Main Valve Body	Ductile Iron ASTM A536
Main Valve Bonnet	Ductile Iron ASTM A536
Disc Guide	Stainless Steel
Seat	Stainless Steel
Disc	Buna-N Rubber
Diaphragm	Nylon Reinforced Buna-N
Stem	Stainless Steel
Spring	Stainless Steel

*The closing speed control (optional) on this valve should always be open at least three (3) turns off its seat.

BODY CONFIGURATIONS		GLOBE STYLE BODY		ANGLE STYLE BODY
END CONNECTION	PRESSURE RATING	FULL PORT	REDUCED PORT	
Threaded	400 psi max.	1 1/4"-3"	n/a	1 1/4"-3"
Flanged	ANSI Class 150, 250 psi max.	1 1/2"-4"	3"-6"	1 1/2"-4"
	ANSI Class 300, 400 psi max.			
Grooved	300 psi max.	1 1/2"-4"	n/a	1 1/2"-4"
MINIMUM INLET PRESSURE 10 PSI				

Pilot Spring Range: 15-150 psi
Temperature Rating: Water 33°F to 140°F

Standard Features
- ☐ Blue Epoxy Coated, FDA Approved
- ☐ Pilot Assembly
- ☐ "Wye" Type Strainer
- ☐ Opening Speed Control (sizes 1 1/4" - 4")
- ☐ Isolation Valves
- ☐ Inlet and Outlet Pressure Gauges
- ☐ ANSI Class 150 Flanges
- ☐ Copper Tubing and Brass Fittings
- ☐ Low-Flow By-Pass Valves: 1/2" PRXL (sizes 1 1/4" -3) 3/4" NR3XL-BP (size 4")

Options
(Add suffix letters to ZW209BP)
Function
- ☐ C - 40XL2 Hydraulic Check with Isolation Valve
- ☐ L - SC1 Closing Speed Control*
- ☐ O - SC1 Opening Speed Control (Standard 1 1/4" - 4")

Body
- ☐ A - Angle Style Body
- ☐ R - Reduced Port Body

Connections
- ☐ G - IPS Grooved
- ☐ TH - NPT Threaded
- ☐ Y - ANSI Class 300 Flanges

☐ Main Valve Options
- ☐ V - Viton Rubber Internals, Rated 180°F (only available with "LP" or "HP" options)
- ☐ Z - ZPI Visual Position Indicator

Pilot System
- ☐ HP - 30-300 psi High Pressure Range PV-PRD Pilot (replaces PRXL)
- ☐ SP - All Stainless Steel Pilotry (replaces all brass fittings, pilot valve and copper tubing. "GL" Option included)
- ☐ SH - Stainless Steel Braided Hoses (only replaces Copper Tubing)
- ☐ GL - Liquid Filled Gauge
- ☐ SO - Limit Switch Open Trip
- ☐ SC - Limit Switch Closed Trip
- ☐ SD - Limit Switch Dual Trip

Schematic Diagram

Item	Description of Standard Features
1	Main Valve
2	850XL Isolation Valve
3	SXL "Wye" Type Strainer
4	Pressure Gauge
5	Restriction Fitting
6	PRXL Pressure Reducing Control
7	PRXL Pressure Reducing Control By-Pass

Zurn Industries, LLC | Wilkins
1747 Commerce Way, Paso Robles, CA U.S.A. 93446 Ph. 855-663-9876, Fax 805-238-5766
In Canada | Zurn Industries Limited
7900 Goreway Drive, Unit 10, Brampton, Ontario L6T 5W6, 877-892-5216
www.zurn.com

Rev. S
Date: 4/22
Document No. ACV-ZW209BP
Product No. Model ZW209BP
Patent zurn.com/patents

Page 1 of 4

Flow Characteristics

* Notes for Body Minimum Friction Loss Chart:
Minimum inlet pressure is 10 psi higher than set point or the additional body friction loss intended flow, whichever is higher. (friction loss may be important at flows above 20 ft/s)
Example: A 6" valve intended to flow 2000 GPM at 150 psi has a friction loss of 20 psi at 2000 GPM. The minimum inlet pressure would be 150 + 20 = 170 psi. When inlet pressure is below set point, the outlet pressure will be the pressure at the inlet minus the friction loss.

Notes for Pressure Reduction Limit Chart: Determine if the outlet reduced flowing pressure is within the safe operating zone for your Zurn Automatic Control Valve. First, find the system inlet pressure on the left axis and draw a horizontal line from that point across the chart. Then find the outlet reduced flowing pressure on the bottom axis and draw a vertical line up to where it meets the first line. The point where the lines intersect should be in the green "Safe Continuous Operating Zone" below and to the right of the yellow "Noise Zone". If the operating point is in the area labeled "Noise Zone" or "Cavitation Damage Zone", the valve seal ring, plunger, or body may be damaged. The lifespan of the valve will be reduced. Damage from cavitation to internal components may cause high pressure downstream and/or external leaks. To move out of the cavitation or noise zone you will need to place two valves in series in order to safely reduce pressure. Use the chart to pick an intermediate pressure in the green zone that you will set the first valve in series to. The intermediate pressure you pick will then become the inlet pressure for the 2nd valve and you can verify it will be in the green zone using the chart.

Zurn Industries, LLC | Wilkins
1747 Commerce Way, Paso Robles, CA U.S.A. 93446 Ph. 855-663-9876, Fax 805-238-5766
In Canada | Zurn Industries Limited
7900 Goreway Drive, Unit 10, Brampton, Ontario L6T 5W6, 877-892-5216
www.zurn.com

Page 4 of 4

PRESSURE REDUCING VALVE | SCALE NONE | 3

TRAP PRIMER SHALL BE PROVIDED AT EACH FLOOR DRAIN, FLOOR SINK AND FUNNEL DRAIN. REFER TO FLOOR PLAN FOR THE TRAP PRIMER LOCATIONS. CONTRACTOR TO COORDINATE WITH ELECTRICAL FOR POWER REQUIREMENTS.
TRAP PRIMER SHALL BE INSTALLED AT 12" AFF FOR MAXIMUM 20' OF COVERAGE, 24" AFF FOR MAXIMUM 40' OF COVERAGE.

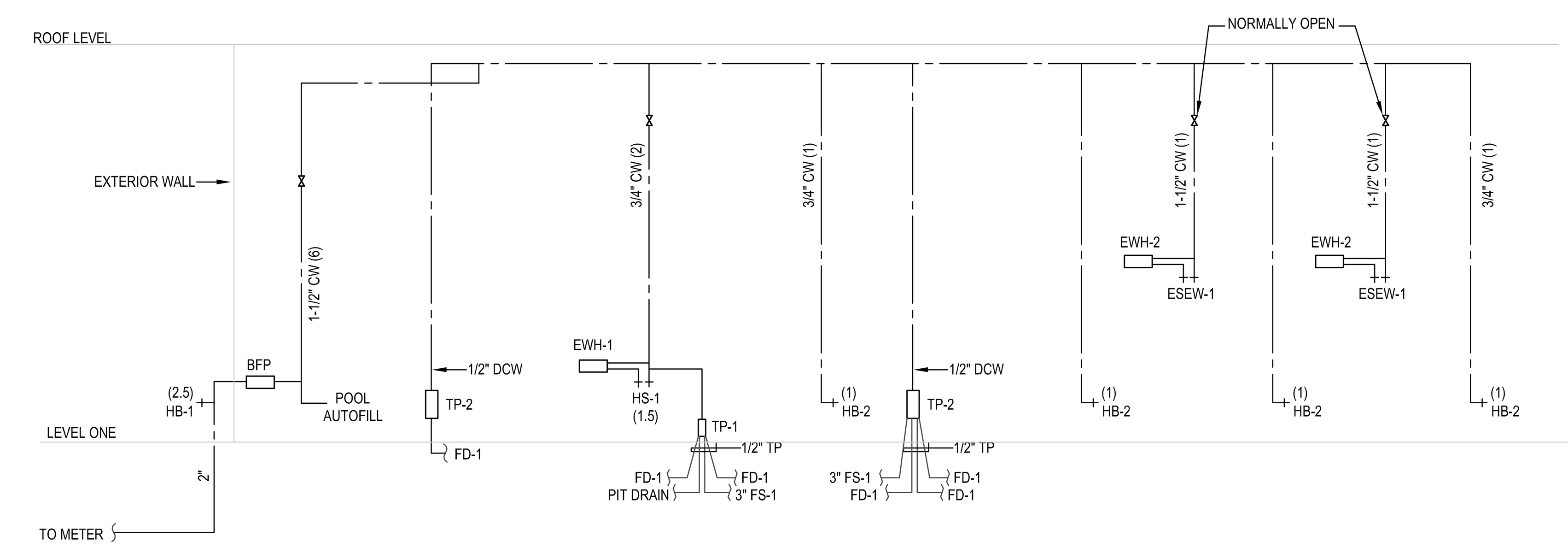

DOMESTIC WATER RISER DIAGRAM - POOL BUILDING (2)
NOT TO SCALE

TRAP PRIMER SHALL BE PROVIDED AT EACH FLOOR DRAIN, FLOOR SINK AND FUNNEL DRAIN. REFER TO FLOOR PLAN FOR THE TRAP PRIMER LOCATIONS. CONTRACTOR TO COORDINATE WITH ELECTRICAL FOR POWER REQUIREMENTS.
TRAP PRIMER SHALL BE INSTALLED AT 12" AFF FOR MAXIMUM 20' OF COVERAGE, 24" AFF FOR MAXIMUM 40' OF COVERAGE.

DOMESTIC WATER RISER DIAGRAM - MAIN BUILDING (1)
NOT TO SCALE

ALFATECH
421 EAST HUNTINGTON DRIVE
MONROVIA, CA 91016
PHONE: (213) 212-9860
www.atce.com

PREPARED BY:
SVA ARCHITECTS
6 HUTTON CENTRE DR, SUITE 1150
SANTA ANA, CA 92707
T 949.809.3380 WWW.SVA-ARCHITECTS.COM

THIS DOCUMENT CONTAINS INFORMATION PROPRIETARY TO SVA ARCHITECTS INC. AND IS FURNISHED IN CONFIDENCE FOR THE LIMITED PURPOSE OF EVALUATION, BIDDING OR REVIEW. THIS DOCUMENT OR ITS CONTENTS MAY NOT BE USED FOR ANY OTHER PURPOSE AND MAY NOT BE REPRODUCED OR DISCLOSED TO OTHERS WITHOUT THE PRIOR WRITTEN CONSENT OF SVA ARCHITECTS INC. ALL RIGHTS RESERVED, © COPYRIGHT 2018.

REGISTERED PROFESSIONAL ENGINEER NIKOLAOS J. KOURASSIS No. M31713 Exp. 6/30/2025 MECHANICAL STATE OF CALIFORNIA

REVISIONS

NO.	DESCRIPTION	DATE	APPROVED
1	90% CD SUBMITTAL	12/15/2022	
2	100% CD SUBMITTAL	05/01/2023	
3	FINAL SUBMITTAL	06/30/2023	

B.M.: THE CITY OF GARDENA BENCHMARK NO. 5D-15 ELEV. = 43.508'

CITY OF GARDENA
DEPARTMENT OF PUBLIC WORKS - ENGINEERING
PLUMBING WATER RISER DIAGRAM
COMMUNITY AQUATICS & SENIOR CENTER
P8.02

	INITIAL	DATE
DESIGNED BY		05/25/2022
DRAWN BY		06/20/23
CHECKED BY		06/29/23

APPROVED BY:
APPROVED BY: DIRECTOR OF PUBLIC WORKS
SHT. 140 OF 195 DWG. NO. 5-2606

FILE PATH:
PLOT TIME: 5/20/2022 5:04:11 PM

MEDIUM PRESSURE GAS SIZING CHART

A.	POOL EQUIPMENT (2 @ 1500)	3000 CFH
B.	MAKE-UP AIR UNIT (1 @ 120)	120 CFH
C.	WATER HEATER (1 @ 285)	285 CFH
	GRAND TOTAL CONNECTED LOAD	3405 CFH

PIPE SIZE	CFH
1/2"	433
3/4"	905
1"	1710
1-1/4"	3500
1-1/2"	5250
2"	10100

NOTE: 1. NATURAL GAS SYSTEM BASED ON 2019 CPC, TABLE 1215.2(6) SCHEDULE 40 METALLIC PIPE.
2. SYSTEM DEVELOPED LENGTH = 400 FT.5 PSI, 3.5 PSI PRESSURE DROP

LOW PRESSURE GAS SIZING CHART (POOL AREA)

A.	POOL EQUIPMENT (2 @ 1500)	3000 CFH
B.	MAKE-UP AIR UNIT (1 @ 120)	120 CFH
C.	WATER HEATER (1 @ 285)	285 CFH
	GRAND TOTAL CONNECTED LOAD	3405 CFH

PIPE SIZE	CFH
1/2"	172
3/4"	360
1"	678
1-1/4"	1390
1-1/2"	2090
2"	4020

NOTE: 1. NATURAL GAS SYSTEM BASED ON 2019 CPC, TABLE 1215.2(1) - SCHEDULE 40 METALLIC PIPE
2. SYSTEM MAXIMUM DEVELOPED LENGTH = 10 FT. LESS THAN 2 PSI, 0.5" W.C. PRESSURE DROP

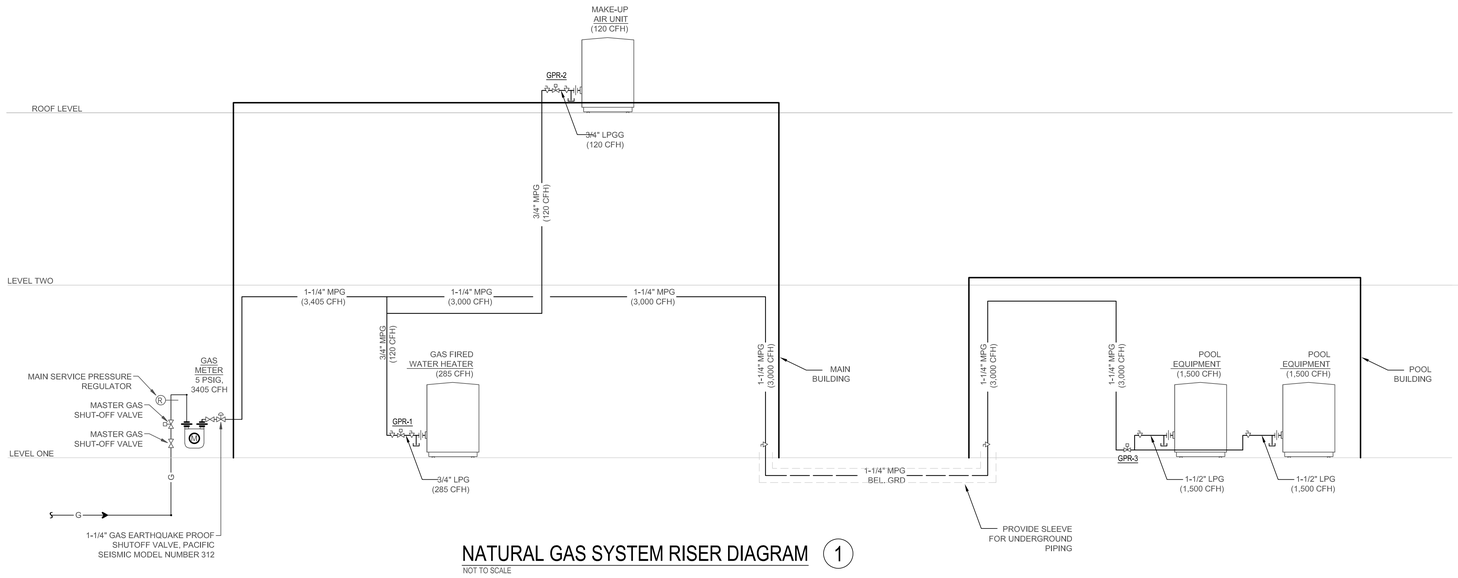

NATURAL GAS SYSTEM RISER DIAGRAM (1)

NOT TO SCALE

ALFATECH
421 EAST HUNTINGTON DRIVE
MONROVIA, CA 91016
PHONE: (213) 212-9860
www.atce.com

PREPARED BY:
SVA ARCHITECTS
6 HUTTON CENTRE DR, SUITE 1150
SANTA ANA, CA 92707
T 949.809.3380 WWW.SVA-ARCHITECTS.COM

THIS DOCUMENT CONTAINS INFORMATION PROPRIETARY TO SVA ARCHITECTS INC. AND IS FURNISHED IN CONFIDENCE FOR THE LIMITED PURPOSE OF EVALUATION, BIDDING OR REVIEW. THIS DOCUMENT OR ITS CONTENTS MAY NOT BE USED FOR ANY OTHER PURPOSE AND MAY NOT BE REPRODUCED OR DISCLOSED TO OTHERS WITHOUT THE PRIOR WRITTEN CONSENT OF SVA ARCHITECTS INC. ALL RIGHTS RESERVED. © COPYRIGHT 2016.

REGISTERED PROFESSIONAL ENGINEER — NICHOLAS J. ROGERS — No. M31713 — Exp. 6/30/2025 — MECHANICAL — STATE OF CALIFORNIA

REVISIONS

NO.	DESCRIPTION	DATE	APPROVED
1	90% CD SUBMITTAL	12/15/2022	
2	100% CD SUBMITTAL	05/01/2023	
3	FINAL SUBMITTAL	06/30/2023	

B.M.: THE CITY OF GARDENA BENCHMARK NO. SD-15
ELEV. = 43.508'

	INITIAL	DATE
DESIGNED BY		05/25/2022
DRAWN BY		06/20/23
CHECKED BY		06/27/23

CITY OF GARDENA
DEPARTMENT OF PUBLIC WORKS - ENGINEERING

PLUMBING GAS RISER DIAGRAM

COMMUNITY AQUATICS & SENIOR CENTER
P8.03

APPROVED BY:
APPROVED BY: DIRECTOR OF PUBLIC WORKS

SHT. 141 OF 195 DWG. NO. 5-2606

PLOT DATE: 6/20/2023 5:04:11 PM

GENERAL NOTES

1. THESES DRAWINGS AND SPECIFICATIONS ARE INTENDED TO COVER A COMPLETE INSTALLATION OF SYSTEMS. THE OMISSION OR EXPRESSED REFERENCE TO ANY ITEM OF LABOR OR MATERIALS REQUIRED FOR THE PROPER EXECUTION OF THE WORK IN ACCORDANCE WITH PRESENT PRACTICE OF THE TRADE SHALL NOT RELIEVE THE CONTRACTOR FROM PROVIDING SUCH ADDITIONAL LABOR AND MATERIALS.

2. THESE PLANS AND SPECIFICATIONS AND ALL WORK AND MATERIALS SHALL BE IN FULL ACCORDANCE WITH ALL LEGAL AND INDUSTRY REQUIREMENTS AND STANDARDS INCLUDING WITHOUT LIMITATION THE FOLLOWING:
   a. CALIFORNIA CODE OF REGULATIONS TITLE 24, PARTS 1 AND 2 (CALIFORNIA BUILDING CODE), 2019 EDITION.
   b. CALIFORNIA CODE OF REGULATIONS TITLE 24, PART 3 (CALIFORNIA ELECTRICAL CODE), 2019 EDITION.
   c. CALIFORNIA CODE OF REGULATIONS TITLE 24, PART 6 (CALIFORNIA ENERGY CODE), 2019 EDITION.
   d. CALIFORNIA CODE OF REGULATIONS TITLE 24, PART 9 (CALIFORNIA FIRE CODE), 2019 EDITION.
   e. OTHER REGULATING AGENCIES WHICH MAY HAVE AUTHORITY OVER ANY PORTION OF THE WORK, INCLUDING THE STATE OF CALIFORNIA DIVISION OF INDUSTRIAL SAFETY, AND THOSE CODES AND STANDARDS LISTED IN THESE NOTES AND SPECIFICATIONS.
   f. THE ELECTRICAL SYSTEMS FUNCTIONALITY STANDARDS SET FORTH IN TITLE 7 OF THE CALIFORNIA CIVIL CODE (THE "RIGHT TO REPAIR ACT").
   g. THE MANUFACTURER'S REQUIREMENTS OR RECOMMENDATIONS FOR ANY INCORPORATED PRODUCTS.
   h. THE MOST CURRENT APPROVED ISSUES OF ANY NOTED SPECIFICATIONS, CODES AND STANDARDS, INCLUDING SUPPLEMENTS, UNLESS NOTED OTHERWISE.

3. THE PLANS REPRESENT ONLY THE FINISHED ELECTRICAL, FIRE ALARM AND LOW VOLTAGE SYSTEMS, AND THEY ARE NOT INTENDED TO INDICATE OR REQUIRE ANY CONSTRUCTION MEANS, METHODS, TECHNIQUES, SEQUENCES OR PROCEDURES.

4. IN USING THE PLANS FOR BIDDING OR CONSTRUCTION PURPOSES, THE CONTRACTOR IS REQUIRED TO REVIEW ALL OF THE PROJECT'S CONSTRUCTION DOCUMENTS AS A WHOLE IN ORWER TO IDENTIFY ALL REQUIREMENTS THAT DIRECTLY OR INDIRECTLY AFFECT ITS PORTION OF THE ELECTRICAL WORK, EVEN REQUIREMENTS LOCATED IN SECTIONS DESIGNATED AS APPLICABLE TO OTHER TRADES. IN CASE OF CONFLICTS, THE CONTRACTOR SHALL EITHER OBTAIN DIRECTION FROM AN APPROPRIATE OWNER REPRESENTATIVE OR OTHERWISE APPLY THE MORE STRINGENT REQUIREMENT.

5. IN INTERPRETING THE PLANS, THE FOLLOWING GENERAL RULES APPLY:
   a. WRITTEN DIMENSIONS SHALL TAKE PRECEDENCE OVER SCALED DRAWINGS.
   b. SCALED DIMENSIONS AND GRAPHICALLY SHOWN LOCATIONS ARE TO BE CONSIDERED ONLY APPROXIMATE, FIELD VERIFY DIMENSIONS PRIOR TO BID.

6. IN INTERPRETING THE PLANS, THE FOLLOWING GENERAL RULES APPLY:
   a. BECAUSE THE PLANS ARE INTENDED TO SET FORTH THE REQUIREMENTS FOR CONSTRUCTION IN ONLY AN INDUSTRY-STANDARD LEVEL OF QUALITY AND DETAIL, AND THEREFORE ARE INTENDED TO BE SUPPLEMENTED BY APPROPRIATE REQUESTS FOR CLARIFICATION AND INFORMATION, ERRORS AND OMISSIONS AND TO BRING THESE ERRORS AND OMISSIONS TO THE ATTENTION OF AN APPROPRIATE OWNER REPRESENTATIVE IN A TIMELY MANNER AND ASSUMES THE RISK OF THE CONSEQUENCES OF FAILING TO DO SO BEFORE BIDDING OR OTHERWISE PROCEEDING.
   b. THE CONTRACTOR SHALL REVIEW AND VERIFY ALL DIMENSIONS PRIOR TO STARTING CONSTRUCTION, AND NOTIFY THE ARCHITECT IMMEDIATELY OF ANY DISCREPANCIES OR INCONSISTENCIES.

7. SUBMITTALS WILL BE REVIEWED BY THE ELECTRICAL ENGINEER, IF AT ALL, ONLY PURSUANT TO THE INDUSTRY-STANDARD PROTOCOL SET FORTH IN AIA DOCUMENT A201, AND IN NO EVENT WILL THE THE SUBMITTAL REVIEW PROCESS RELIEVE OR LESSEN THE SUBMITTING CONTRACTOR'S RESPONSIBILITY FOR AN INAPPROPRIATE SUBMITTAL.

8. IN NO EVENT WILL ANY SITE VISITS BY THE ELECTRICAL ENGINEER CONCERN CONSTRUCTION MEANS AND METHODS OR CONSTRUCTION SAFETY, AND ALL SUCH MATTERS SHALL REMAIN THE SOLE RESPONSIBILITY OF THE CONTRACTOR.

9. COPIES OF THE THE PLANS PROVIDED IN ANY ELECTRONIC FORM ARE SUBJECT TO THE SAME PROVISIONS AS THE OTHER INSTRUMENTS OF SERVICE PREPARED BY OR ON BEHALF OF ELECTRICAL ENGINEER FOR THE PROJECT, INCLUDING WITHOUT LIMITATION THE ENGINEER'S COMMON LAW, STATUTORY OR OTHER RESERVED RIGHTS, INCLUDING COPYRIGHTS. A RECIPIENT IS GRANTED AT MOST A TRANSFERABLE NON-EXCLUSIVE LICENSE TO REUSE THE PLANS SOLELY FOR PROJECT PURPOSES; AND NO RECIPIENT IS AUTHORIZED TO USE OR TO ALLOW THE USE OF ALL OR ANY PORTION OF THESE PLANS FOR ANY OTHER PURPOSE, AND ANY USE FOR ANY OTHER PURPOSE WOULD CONSTITUTE ACTIONABLE PLAGIARISM. ELECTRICAL ENGINEER PROVIDES DOCUMENTS IN AN ELECTRONIC FORM ONLY IN ITS STANDARD FORMATS AND CONVENTIONS AND WITH NO GUARANTEE OF COMPATIBILITY WITH ANY RECIPIENT'S SOFTWARE OR HARDWARE AND ANY USE WITH OR CONVERSION TO OTHER FORMATS OR CONVENTIONS, OR THE USE WITH ANY PARTICULAR SOFTWARE OR HARDWARE, IS AT THE RECIPIENT'S SOLE RISK.

10. ALL CONDUIT, STRUCTURES AND INSTALLATION FOR POWER AND TELEPHONE UTILITIES SHALL CONFORM WITH THE REQUIREMENTS (MINIMUM BEND RADIUS, CONCRETE ENCASEMENT, CONDUIT, TYPE, ETC.) OF THE UTILITIES COMPANY. VERIFY ALL REQUIREMENTS WITH UTILITY COMPANY PRIOR TO BID AND INCLUDE ALL COSTS IN BID.

11. CONTRACTOR SHALL OBTAIN SOUTHERN CALIFORNIA EDISON CO. (SCE CO.) CONSTRUCTION DRAWINGS PRIOR TO CONSTRUCTION AND SHALL INSTALL POWER CONDUIT AND STRUCTURES ACCORDING TO SCE CO. DRAWINGS. EXTRA PAYMENTS WILL NOT BE GRANTED FOR FAILURE TO DO SO.

12. LOCATIONS OF EXISTING UTILITIES ARE NOT SHOWN AND CONTRACTOR SHALL EXERCISE EXTREME CAUTION IN EXCAVATING AND TRENCHING ON THIS SITE TO AVOID EXISTING DUCTS, PIPING OR CONDUIT, ETC. AND TO PREVENT HAZARD TO PERSONNEL AND/OR DAMAGE TO EXISTING UNDERGROUND UTILITIES OR STRUCTURES WHETHER OR NOT SHOWN AND INSTALLED BY ANY OTHER CONTRACTS. THE ENGINEER IS NOT RESPONSIBLE FOR THE LOCATION OF UNDERGROUND UTILITIES OR STRUCTURES WHETHER OR NOT SHOWN OR DETAILED BY ANY OTHER CONTRACTS. THE CONTRACTOR SHALL IMMEDIATELY NOTIFY THE ENGINEER SHOULD SUCH UNIDENTIFIED CONDITIONS BE DISCOVERED. THESE DRAWINGS

13. REFER TO THE DRAWINGS AND SHOP DRAWINGS OF OTHER TRADES FOR ADDITIONAL DETAILS WHICH AFFECT THE PROPER INSTALLATION OF THIS WORK.

14. THE DRAWINGS INDICATE, IN A DIAGRAMMATIC MANNER, THE DESIRED LOCATIONS AND ARRANGEMENT OF THE COMPONENTS OF ELECTRICAL WORK. DETERMINE EXACT CONDUIT ROUTING, CONDUIT BENDS, AUXILIARY JUNCTION BOXES, SUPPORTS AND UNDEFINED CONSTRUCTION DETAILS AS A JOB CONDITION TO BE INSTALLED IN ACCORDANCE WITH THE APPLICABLE CODE REQUIREMENTS. PROPER JUDGEMENT MUST BE EXERCISED IN EXECUTING THE WORK SO AS TO SECURE THE BEST POSSIBLE INSTALLATION IN THE AVAILABLE SPACE AND TO OVERCOME LOCAL DIFFICULTIES DUE TO SPACE LIMITATIONS OR INTERFERENCE OF CONDITIONS ENCOUNTERED.

15. IN THE EVENT CHANGES IN THE INDICATED LOCATIONS OR ARRANGEMENTS ARE NECESSARY, DUE TO DEVELOPED CONDITIONS IN THE BUILDING CONSTRUCTION OR REARRANGEMENT OF EQUIPMENT, SUCH CHANGES SHALL BE MADE WITHOUT COST PROVIDING THE CHANGE IS ORDERED BEFORE THE CONDUIT RUNS, ETC., AND WORK DIRECTLY CONNECTED TO SAME IS INSTALLED AND NO EXTRA MATERIALS ARE REQUIRED.

16. ELECTRICAL PLANS DO NOT SHOW ELECTRICAL REQUIREMENTS FOR MECHANICAL AND PLUMBING EQUIPMENT CONTROL. REFER TO MECHANICAL AND PLUMBING PLANS AND SPECIFICATIONS. WHERE EQUIPMENT IS INDICATED TO BE BY ELECTRICAL CONTRACTOR PROVIDE ALL CONDUIT, WIRE, J-BOX, OUTLET BOXES, RELAY SWITCHES, TIME SWITCHES, CONTROL CIRCUITS, ETC. REQUIRED FOR A COMPLETE AND OPERABLE MECHANICAL AND PLUMBING INSTALLATION. ALL WIRE SHALL BE INSTALLED IN CODE SIZED CONDUIT.

17. LOCATIONS OF DISCONNECT SWITCHES AND CONNECTIONS FOR MECHANICAL AND PLUMBING EQUIPMENT ARE SHOWN DIAGRAMMATICALLY. VERIFY ACTUAL CONNECTION LOCATIONS WITH EQUIPMENT SHOP DRAWINGS AND LOCATE DISCONNECT SWITCHES TO PROVIDE CODE REQUIRED CLEARANCES AND ACCESS. DISCONNECT SWITCHES ON ROOF SHALL BE 30" MINIMUM ABOVE ROOF. MOUNTING OF DISCONNECTS DIRECTLY ON MECHANICAL EQUIPMENT IS NOT ACCEPTABLE. PROVIDE ANGLE IRON SUPPORT BRACKETS BOLTED TO ROOF FRAMING. FIELD GALVANIZE ALL FIELD CUT ENDS OF SUPPORTS. PROVIDE ROOF FLASHING AS REQUIRED.

18. PROVIDE ALL EQUIPMENT WITH ENCLOSURES LISTED OR LABELED FOR USE AND LOCATION WHERE SUCH EQUIPMENT IS INSTALLED.

19. PROVIDE UL LISTED FIRE STOP FOR ALL PENETRATIONS THROUGH FIRE RATED FLOORS, WALLS AND CEILINGS TO MAINTAIN ALL FIRE RATINGS. THE FIRE STOP MATERIALS SHALL BE RE-ENTERABLE AND REUSABLE.

20. GROUNDING SHALL BE EXECUTED IN ACCORDANCE WITH ALL APPLICABLE CODES AND REGULATIONS, BOTH OF THE STATE OF CALIFORNIA AND LOCAL AUTHORITIES HAVING JURISDICTION.

21. PROVIDE GROUND WIRE IN EACH CONDUIT CONTAINING CIRCUITS FEEDING RECEPTACLES. THE CONDUIT SHALL NOT BE PERMITTED TO SERVE AS THE ONLY ELECTRICAL GROUND RETURN PATH.

22. PROVIDE HANDLE TIES AT CIRCUIT BREAKERS TO SIMULTANEOUSLY DISCONNECT ALL UNGROUNDED CONDUCTORS OF MULTI-WIRE BRANCH CIRCUITS WITH A SHARED NEUTRAL.

23. UNLESS NOTED OTHERWISE ALL 120 VOLT HOMERUNS OVER 100 FEET SHALL BE #10 AWG MINIMUM, OVER 175 FEET SHALL BE #8 AWG MINIMUM. ADJUST CONDUIT SIZE ACCORDINGLY.

24. CONDUIT FOR TELEPHONE/DATA CABLING SHALL COMPLY WITH THE FOLLOWING ADDITIONAL REQUIREMENTS:
   a. INSIDE BEND RADIUS SHALL BE AT LEAST 10 TIMES ITS INTERNAL DIAMETER.
   b. PROVIDE PULL BOXES WHENEVER CONDUIT LENGTH EXCEEDS 150 FEET AND WHEN COMBINED BENDS ARE GREATER THAN 180 DEGREES.
   c. ALL CONDUIT SHALL BE PROVIDED WITH INSULATED BUSHINGS.
   d. MAINTAIN A MINIMUM CLEARANCE OF 4 FEET FROM MOTORS AND TRANSFORMERS.
   e. MAINTAIN A MINIMUM CLEARANCE OF 12 INCHES FROM POWER CIRCUITS.
   f. MAINTAIN A MINIMUM CLEARANCE OF 12 INCHES FROM FLUORESCENT LIGHT FIXTURES.

25. COORDINATE LOCATION OF ALL CARD READERS, DOOR CONTACTS, ELECTRIC LOCKS AND ASSOCIATED CONDUIT REQUIREMENTS WITH SECURITY/BUILDING ACCESS CONTROLS INSTALLER.

26. COORDINATE MOUNTING HEIGHTS OF RECEPTACLES, SWITCHES, A/V DEVICES, SECURITY DEVICES, ETC. MOUNTED ON COMMON WALLS SO THAT ALL OUTLETS ARE MOUNTED TO ALIGN HORIZONTALLY.

27. NOTIFY THE ARCHITECT IN WRITING WHEN INSTALLATION IS COMPLETE AND THAT A FINAL INSPECTION OF THIS WORK CAN BE PERFORMED. IN THE EVENT DEFECTS OR DEFICIENCIES ARE FOUND DURING THIS FINAL INSPECTION, THEY SHALL BE CORRECTED TO THE SATISFACTION OF THE ARCHITECT BEFORE FINAL ACCEPTANCE CAN BE ISSUED.

28. ALL RECEPTACLES MOUNTED AT +5'-6" OR LOWER IN DWELLING UNITS SHALL BE TAMPER-RESISTANT TYPE, EXCEPT RECEPTACLES FOR FIXED APPLIANCES AND/OR EQUIPMENT. SEE SPECIFICATIONS SECTION 26 05 15.

29. PER 2016 NEC ARTICLE 210.12(A): ALL 120 VOLT, SINGLE PHASE, 15- AND 20- AMPERE BRANCH CIRCUITS SUPPLYING OUTLETS INSTALLED IN DWELLING UNIT FAMILY ROOMS, DINING ROOMS, LIVING ROOMS, PARLORS, LIBRARIES, DENS, BEDROOMS, SUNROOMS, RECREATIONS ROOMS,CLOSETS, HALLWAYS, OR SIMILAR ROOMS OR AREAS SHALL BE PROTECTED BY A LISTED ARC-FAULT CIRCUIT INTERRUPTER, COMBINATION TYPE, INSTALLED TO PROVIDE PROTECTION OF THE CIRCUIT.

30. GROUNDING AND BONDINGTERMINALS SHALL BE IDENTIFIED FOR USE IN WET AND CORROSIVE ENVIRONMENTS. FIELD-INSTALLED GROUNDING AND BONDING CONNECTIONS IN A DAMP, WET, OR CORROSIVE ENVIRONMENT SHALL BE COMPOSED OF COPPER, COPPER ALLOY, OR STAINLESS STEEL. THEY SHALL BE LISTED FOR DIRECT BURIAL USE." [680.7, 2019 CEC]

SYMBOL LIST

(ALL SYMBOLS NOT NECESSARILY USED ON THESE DRAWINGS)
ALL SYMBOL DESCRIPTIONS ARE SUBJECT TO MODIFICATION AS NOTED ON THE DRAWINGS.
VERIFY EXACT LOCATIONS AND HEIGHTS OF OUTLETS WITH ARCHITECTURAL INTERIOR ELEVATIONS PRIOR TO ROUGH-IN.

NOTE:
REFER TO E-0.02 FOR LIGHTING FIXTURE SYMBOLS AND E-0.02A FOR LIGHTING CONTROLS.

EXIT SIGN SINGLE FACE, ON FLUSH CEILING MOUNTED OUTLET BOX. ARROW INDICATES DIRECTIONAL ARROW ON EXIT SIGN FACE.

EXIT SIGN DOUBLE FACE, ON FLUSH CEILING MOUNTED OUTLET BOX.

SINGLE POLE TOGGLE SWITCH, ON FLUSH WALL MOUNTED OUTLET BOX, +45". INSTALL MULTIPLE SWITCHES UNDER COMMON COVER PLATE. SUBSCRIPT OR SUPERSCRIPT AT SWITCH SYMBOL INDICATES THE FOLLOWING:

2 - DOUBLE POLE 4 - FOUR WAY M - MANUAL MOTOR STARTERS
3 - THREE WAY P - PILOT LIGHT K - KEY OPERATED
R - SPDT MOMENTARY CONTACT RELAY SWITCH V - VAPOR PROOF
a,b,c,d, ETC. - MULTIPLE SWITCHES WITH IDENTIFICATION OF OUTLET CONTROLLED.

SWITCH FOR CONTROL OF LOW VOLTAGE LIGHTING RELAY(S), ON FLUSH WALL MOUNTED OUTLET BOX, +45". INSTALL MULTIPLE SWITCHES UNDER COMMON COVER PLATE.

OCCUPANCY MOTION SENSOR ON FLUSH CEILING MOUNTED OUTLET BOX. REFER TO E-0.02A.

OCCUPANCY MOTION/PHOTO SENSOR ON FLUSH CEILING MOUNTED OUTLET BOX. REFER TO E-0.02A.

OCCUPANCY MOTION SENSOR SWITCH, ON FLUSH WALL MOUNTED OUTLET BOX, +45". REFER TO E-0.02A.

VACANCY SENSOR SWITCH, ON FLUSH WALL MOUNTED OUTLET BOX, +45". REFER TO E-0.02A.

LOW VOLTAGE LIGHTING SWITCH, ON FLUSH WALL MOUNTED OUTLET BOX, +45". REFER TO E-0.02A.

DUPLEX CONVENIENCE RECEPTACLE VERTICAL ON FLUSH WALL MOUNTED OUTLET BOX, +18". STEM INDICATES WALL MOUNTED OUTLET BOX, TYPICAL.

DUPLEX CONVENIENCE RECEPTACLE HORIZONTAL ON FLUSH WALL MOUNTED OUTLET BOX, +6" ABOVE COUNTER SPLASH.

DUPLEX CONVENIENCE RECEPTACLE SPLIT WIRED, IMPRINTED "CONTROLLED", ON FLUSH WALL MOUNTED OUTLET BOX, +18".

DUPLEX CONVENIENCE RECEPTACLE SPLIT WIRED, ON FLUSH WALL MOUNTED OUTLET BOX, +18".

DOUBLE DUPLEX (FOUR-PLEX) CONVENIENCE RECEPTACLE ON ONE FLUSH WALL MOUNTED OUTLET BOX +18".

DOUBLE DUPLEX (FOUR-PLEX) CONVENIENCE RECEPTACLE SPLIT-WIRED. ONE PLUG TO BE IMPRINTED "CONTROLLED", ON FLUSH WALL MOUNTED OUTLET BOX, +18".

SINGLE RECEPTACLE, NEMA CONFIGURATION PER EQUIPMENT MANUFACTURER REQUIREMENTS, ON FLUSH WALL MOUNTED OUTLET BOX, +18".

DUPLEX CONVENIENCE RECEPTACLE WITH INTEGRAL GROUND FAULT INTERRUPTER, VERTICAL ON FLUSH WALL MOUNTED OUTLET BOX +18".

DUPLEX CONVENIENCE RECEPTACLE WITH INTEGRAL GROUND FAULT INTERRUPTER, HORIZONTAL ON FLUSH WALL MOUNTED OUTLET BOX, +6" ABOVE COUNTER SPLASH.

WP DUPLEX CONVENIENCE RECEPTACLE IN DAMP LOCATION, WITH INTERNAL GROUND FAULT INTERRUPTER, IN FLUSH WALL MOUNTED OUTLET BOX WITH HINGED DOOR, LOCK AND KEY, +18".

NOTE: RECEPTACLES LOCATED IN "WET LOCATIONS" SHALL HAVE AN ENCLOSURE THAT IS WEATHERPROOF WHETHER OR NOT THE ATTACHMENT PLUG CAP IS INSERTED, PER CEC 406.9 (B)(1). PROVIDE P&S WIUCAST1 OR EQUAL BY HUBBELL.

WP DUPLEX CONVENIENCE RECEPTACLE IN DAMP LOCATION, WITH INTERNAL GROUND FAULT INTERRUPTER, ON FLUSH WALL MOUNTED OUTLET BOX WITH SPRING DOOR COVER, +18".

NOTE: RECEPTACLES LOCATED IN "WET LOCATIONS" SHALL HAVE AN ENCLOSURE THAT IS WEATHERPROOF WHETHER OR NOT THE ATTACHMENT PLUG CAP IS INSERTED, PER CEC 406.9 (B)(1). PROVIDE P&S WIUCAST1 OR EQUAL BY HUBBELL.

DUPLEX CONVENIENCE RECEPTACLE ON FLUSH, FLOOR MOUNTED OUTLET BOX.

DUPLEX CONVENIENCE RECEPTACLES, TYPE ON FLUSH FLOOR MOUNTED OUTLET BOX.

DUPLEX CONVENIENCE RECEPTACLE, ON FLUSH CEILING MOUNTED OUTLET BOX.

JUNCTION BOX, FLUSH WALL MOUNTED, +18".

JUNCTION BOX CONCEALED ABOVE ACCESSIBLE CEILING.

INDICATES CONNECTION TO EQUIPMENT AS REQUIRED, TYPICAL.

RECESSED FLAT PANEL TV/DISPLAY WALL BOX WITH FLUSH GROMMETED COVER PANEL (FSR #PWB-100). REFER TO ARCHITECTURAL ELEVATION PLANS FOR MOUNTING HEIGHT INFORMATION. PROVIDE WITH (1) POWER RECEPTACLE, (2) EHTERNET OUTLETS WITH 3/4"C., & (1) HDMI OUTLET WITH 1 1/4"C. ROUTE CONDUIT TO NEAREST ACCESSIBLE CEILING SPACE OR TO ROOM AS NOTED (RM. ###) ON FLOOR PLAN.

PANELBOARD, ADJACENT LINE INDICATES PANEL FRONT. ADJACENT BALLOON INDICATES PANEL DESIGNATION "A", SEE DRAWING E-1 FOR PANEL SCHEDULE.

FLOOR STANDING SWITCHGEAR ADJACENT BALLOON INDICATES EQUIPMENT DESIGNATION "DBA", SEE DRAWING E-1 FOR SINGLE LINE DIAGRAM AND/OR SCHEDULE.

CIRCUIT BREAKER STATIONARY (NON-DRAWOUT), SECONDARY VOLTAGE.

FUSED SAFETY SWITCH (DISCONNECT), HORSE POWER RATED. MOUNT ON WALL +45", OR ON EQUIPMENT +36". PROVIDE SWITCH AND FUSES SIZED PER EQUIPMENT MANUFACTURER REQUIREMENTS.

CONDUIT, INSTALLED CONCEALED IN WALL OR IN CEILING SPACE.

CONDUIT, INSTALLED CONCEALED IN OR UNDER FLOOR OR BELOW GRADE, 3/4" CONDUIT MINIMUM.

CONDUIT, INSTALLED EXPOSED.

HOMERUN TO PANEL "B" FOR CIRCUITS 5, 7, 9 WITH SEPARATE NEUTRALS.

UNDERGROUND CONDUIT STUBOUT, STUB 5'-0" FROM BUILDING OR WALKWAY, CAP, MARK AND RECORD.

CONDUIT STUBOUT. CONDUIT QUANTITY & SIZE PER PLANS. CAP, MARK AND RECORD.

CONNECTED TO SOLID GROUND REFERENCE POINT

TERMINAL CABINET OR EQUIPMENT CABINET. ADJACENT LINE INDICATES CABINET FRONT.

TELEPHONE OUTLET MOUNTED AT +18" AFF - UON. PROVIDE 3/4"C. TO POINT ABOVE ACCESSIBLE CEILING SPACE OR NEAREST TEL. BACKBOARD.

C - OUTLET HORIZONTAL IN FLUSH WALL MOUNTED OUTLET BOX, +6" ABOVE COUNTER SPLASH.
W - OUTLET ON FLUSH WALL MOUNTED OUTLET BOX, +45".

COMBINATION TELEPHONE/DATA OUTLET MOUNTED AT +18" AFF - UON. PROVIDE 3/4"C. TO POINT ABOVE ACCESSIBLE CEILING SPACE OR NEAREST TEL. BACKBOARD.
W - DENOTES WALL MOUNTED AT +45" AFF - UON

DATA OUTLET MOUNTED AT +18" AFF - UON. PROVIDE 3/4"C. TO POINT ABOVE ACCESSIBLE CEILING SPACE OR NEAREST TEL. BACKBOARD.
W - DENOTES WALL MOUNTED AT +45" AFF - UON

C / E-2 DETAIL CALLOUT, "C" INDICATES DETAIL, "E-2" INDICATES DRAWING WHERE DETAIL OCCURS.

EF / 1 MECHANICAL EQUIPMENT CALLOUT. REFER TO MECHANICAL DRAWINGS FOR EXACT LOCATIONS AND REQUIREMENTS OF MECHANICAL EQUIPMENT.

1 NOTE CALLOUT. REFER TO CORRESPONDING NOTE ON DRAWING WHERE CALLOUT OCCURS.

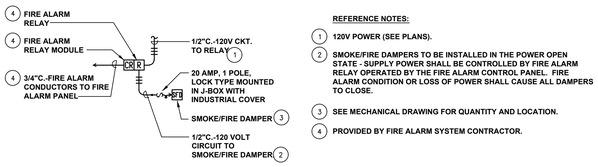

REFERENCE NOTES:

1. 120V POWER (SEE PLANS).
2. SMOKE/FIRE DAMPERS TO BE INSTALLED IN THE POWER OPEN STATE - SUPPLY POWER SHALL BE CONTROLLED BY FIRE ALARM RELAY OPERATED BY THE FIRE ALARM CONTROL PANEL. FIRE ALARM CONDITION OR LOSS OF POWER SHALL CAUSE ALL DAMPERS TO CLOSE.
3. SEE MECHANICAL DRAWING FOR QUANTITY AND LOCATION.
4. PROVIDED BY FIRE ALARM SYSTEM CONTRACTOR.

SMOKE FIRE DAMPER TO FIRE ALARM SYSTEM INTERCONNECTION DETAIL

SMOKE FIRE DAMPER 120V CIRCUITS

- 1st FLOOR: P1-53
- 2nd FLOOR: P1A-34
- POOL BUILDING: P2-41

NOTES:

1. AREA AND/OR DUCT SMOKE DETECTORS AS REQUIRED SHALL BE PROVIDED BY THE FIRE ALARM SYSTEM CONTRACTOR.

SMOKE FIRE DAMPER WIRING DETAIL

SCALE: NONE | 1

ABBREVIATIONS

A.F.C.I.	ARC FAULT CIRCUIT INTERUPTER
A.F.F.	ABOVE FINISH FLOOR
A.F.G.	ABOVE FINISH GRADE
AWG	AMERICAN WIRE GAUGE
AMP, A	AMPERE
A.I.C.	AMPERES INTERRUPTING CAPACITY (SYMMETRICAL)
AF/AT	AMP FRAME, AMP TRIP
AS/AF	AMP SWITCH, AMP FUSE
CIRC.,CKT.	CIRCUIT
CB	CIRCUIT BREAKER
C	CONDUIT
C.O.	CONDUIT ONLY.
CONN	CONNECTED
CPT	CONTROL POWER TRANSFORMER
CLCB	CURRENT LIMITING CIRCUIT BREAKER
CLF	CURRENT LIMITING FUSE
CT	CURRENT TRANSFORMER
DIA	DIAMETER
EMCS	ENERGY MANAGEMENT CONTROL SYSTEM
EMT	ELECTRICAL METALLIC TUBING
E-O-L	END-OF-LINE CIRCUIT TERMINATOR.
EF	EXHAUST FAN
FT or '	FEET
FA	FIRE ALARM
FLA	FULL LOAD AMPS
GFI	GROUND FAULT INTERRUPTER.
GRD	GROUND
HOA	HAND-OFF-AUTO
HVAC	HEATING, VENTILATION, AIR CONDITIONING
H.,W.,D.,L.	HEIGHT, WIDTH, DEPTH, LENGTH
HID	HIGH INTENSITY DISCHARGE
HP	HORSEPOWER
IN. or "	INCHES
IG	ISOLATED GROUND
J-BOX	JUNCTION BOX
KVA	KILOVOLT AMPERES
KW	KILOWATT
LCL	LONG CONTINUOUS LOAD
L.F.	LINEAR FEET
LTG, LTS	LIGHTING
MCB	MAIN CIRCUIT BREAKER
MLO	MAIN LUGS ONLY
MH	METAL HALIDE
MCC	MOTOR CONTROL CENTER
MCM	THOUSAND CIRCULAR MILS
MCP	MOTOR CIRCUIT PROTECTOR
MTD	MOUNTED
NEC	NATIONAL ELECTRICAL CODE
NC	NORMALLY CLOSED
NO	NORMALLY OPENED
NF	NON-FUSED
NIC	NOT IN CONTRACT
NO. or #	NUMBER
OFCI	OWNER FURNISHED, CONTRACTOR INSTALLED.
PRIMARY	OVER 600 VOLTS
PH. or Φ	PHASE
PROVIDE	FURNISH, INSTALL AND CONNECT.
PT	POTENTIAL TRANSFORMER
PA	PUBLIC ADDRESS
REC, RECEPT	RECEPTACLE
RGS	RIGID GALVANIZED STEEL
SECONDARY	600 VOLTS AND LESS
TYP	TYPICAL
U.N.O.	UNLESS NOTED OTHERWISE
V	VOLTS
VA	VOLT AMPERES
WP	WEATHERPROOF
W	WIRE
Y	WYE CONFIGURATION
Z1	ZONE, "1" INDICATES INITIATING ZONE #1.
△	DELTA CONFIGURATION
+45"	MOUNTING HEIGHT TO CENTER LINE OF COVER PLATE
1P	SINGLE POLE
2P	DOUBLE POLE

SHEET INDEX

E-0.01	SYMBOLS LIST AND GENERAL NOTES
E-0.02	LIGHTING FIXTURE SCHEDULE
E-0.02A	LIGHTING CONTROLS
E-0.02B	LIGHTING FIXTURE CUT SHEETS
E-0.02C	LIGHTING FIXTURE CUT SHEETS
E-0.02D	LIGHTING FIXTURE CUT SHEETS
E-0.03	SINGLE LINE DIAGRAM & DETAILS
E-0.04	PANEL SCHEDULES
E-0.05	TITLE 24 - INDOOR
E-0.06	TITLE 24 - OUTDOOR
E-1.01	SITE ELECTRICAL PLAN
E-1.01A	SITE PHOTOMETRIC PLAN
E-2.01	BUILDING LIGHTING PLANS
E-2.01A	EMERGENCY LIGHTING PHOTOMETRIC PLAN
E-3.01	BUILDING POWER & SIGNAL PLANS
E-3.02	ROOF ELECTRICAL PLAN
E-3.03	POOL BUILDING LIGHTING, POWER & SIGNAL PLANS
E-4.01	DETAILS AND ENLARGED ELECTRICAL PLANS

FIRE ALARM SYSTEM GENERAL NOTES

1. THE FIRE ALARM SYSTEM SHALL BE CODE MINIMUM REQUIREMENT AND SHALL BE DESIGN/BUILD BY THE CONTRACTOR.
2. INSTALLATION OF THE FIRE ALARM SYSTEM SHALL NOT BE STARTED UNTIL SHOP DRAWINGS ARE SUBMITTED AND APPROVED BY THE LOCAL AUTHORITIES HAVING JURISDICTION (AHJ).
3. PROVIDE ALL DRAWINGS, ENGINEERING CALCULATIONS, EQUIPMENT SPECIFICATIONS, ETC. AS NECESSARY TO SUBMIT FOR REVIEW AND OBTAIN APPROVAL BY THE AHJ.
4. FIRE ALARM SHALL BE MONITORED BY A U.L. CERTIFICATED CENTRAL STATION MONITORING COMPANY.
5. PROVIDE WIRING INTEGRATION BETWEEN FIRE ALARM SYSTEM AND HVAC CONTROL SYSTEM. SEE MECHANICAL DRAWINGS FOR REQUIREMENTS.
6. FIRE ALARM SYSTEM SHALL MONITOR ALL FIRE SPRINKLER CONTROL VALVES, FLOW SWITCHES,AND PIV.
7. PROVIDE THE QUANTITY OF DEVICES REQUIRED FOR A COMPLETE AND OPERABLE FIRE ALARM SYSTEM TO MEET THE CITY OF GARDENA FIRE DEPARTMENT, AND STATE FIRE MARSHAL REQUIREMENTS.

FBA Engineering / Plot Date: 9/26/2023 11:05 AM / Plotted by: Steve Roth / Drawing Location: I:\535\050\E-0.01_535050.dwg

DIGALERT
DIAL TOLL FREE 1-800-422-4133
AT LEAST TWO DAYS BEFORE YOU DIG
UNDERGROUND SERVICE ALERT OF SOUTHERN CALIFORNIA

BASIS OF BEARINGS:
BEARINGS SHOWN HEREON ARE BASED ON THE CENTERLINE OF 162 ND STREET (FORMERLY MARKET STREET) BEING N 89° 55' 30" E SHOWN ON TRACT NO. 10901, M.B. 254/31-32

BENCHMARK:
THE CITY OF GARDENA BENCHMARK NO. 5D-15 ELEV. = 43.508

CONSULTANT:
FBA Engineering
Consulting Electrical Engineers
150 Paularino Avenue Suite A120
Costa Mesa, CA 92626
949.852.9995 • 949.852.1657 (fax)
fbaengr.com
FBA Job Number: 535050

REGISTERED PROFESSIONAL ENGINEER — No. 10372 — EXP. 09-30-24 — ELECTRICAL — STATE OF CALIFORNIA
05/01/2023

PREPARED UNDER THE SUPERVISION OF:
RJM DESIGN GROUP
31591 Camino Capistrano
San Juan Capistrano, CA 92675
www.RJMdesigngroup.com
[949) 493-2690 fax
[949) 493-2600 phone

REGISTERED LANDSCAPE ARCHITECT — STATE OF CALIFORNIA — Signature — 09/30/2023 — 5-Sep-2023 — Date

REVISIONS			
NO.	DESCRIPTION	DATE	APPROVED
1	90% CD SUBMITTAL	12/15/2022	
2	100% CD SUBMITTAL	06/01/2023	
3	FINAL SUBMITTAL	10/02/2023	

CITY OF GARDENA
DEPARTMENT OF PUBLIC WORKS - ENGINEERING
SYMBOLS LIST & GENERAL NOTES
COMMUNITY AQUATICS & SENIOR CENTER
E-0.01

	INITAL	DATE
DESIGNED BY	SR	11/14/2022
DR

FIXTURE NOTES

1. **IT IS THE CONTRACTORS RESPONSIBILITY TO VERIFY ACTUAL CEILING CONSTRUCTION TYPE AS DEFINED ON THE ARCHITECTURAL DRAWINGS AND FURNISH ALL LIGHTING FIXTURES WITH THE CORRECT MOUNTING DEVICES WHETHER OR NOT SUCH VARIATIONS ARE INDICATED BY THE FIXTURE CATALOG NUMBER. THE CONTRACTOR SHALL VERIFY DEPTH OF ALL RECESSED LIGHTING FIXTURES WITH ARCHITECTURAL DRAWINGS PRIOR TO ORDERING FIXTURES. ANY DISCREPANCIES THAT WOULD CAUSE RECESSED FIXTURES NOT TO FIT INTO CEILING SHALL BE REPORTED TO THE ARCHITECT PRIOR TO ORDERING FIXTURES.**
2. **CEILING INSULATION SHALL BE INSTALLED TO ALLOW 3" MINIMUM CLEARANCE FROM SIDES AND TOP OF RECESSED LIGHT FIXTURES.**
3. **VERIFY MOUNTING HEIGHT OF ALL WALL AND PENDANT MOUNTED FIXTURES WITH ARCHITECT PRIOR TO ROUGH-IN.**
4. **REFER TO ARCHITECTURAL REFLECTED CEILING PLANS FOR EXACT LOCATION OF ALL LIGHT FIXTURES.**
5. **DO NOT INSTALL LIGHTING FIXTURES IN MECHANICAL ROOMS UNTIL DUCTWORK AND PIPING IS LAID OUT. LOCATE LIGHTING FIXTURES TO AVOID ALL SUCH DUCTWORK AND PIPING TO PROVIDE OPTIMUM LIGHTING.**
6. **LAMPS FOR ALL FIXTURES, INCLUDING DECORATIVE FIXTURES, SHALL BE PROVIDED AND INSTALLED BY ELECTRICAL CONTRACTOR.**
7. **ADDITIONAL EXIT SIGNS AND EMERGENCY LIGHTING MAY BE REQUIRED AT FINAL. A PRELIMINARY WALK-THROUGH INSPECTION IS RECOMMENDED.**

Site Lighting Fixture Schedule

Symbol	Label	Area Utilized	Mounting	Manufacturer	Catalog Number	Description	Lamp	Lumens	Lumens Per Watt	Wattage
	S1	Pool deck & building exit doors.	Surface, wall, +8'-0" to bottom.	Lithonia	WEDG2-LED-P3-35K-80CRI-VW-MVOLT-SRM-AWS-DDBXD	LED wall mounted wedge fixture. Dark bronze finish.	LED	3200	142	23
U U T U	S2	Pool deck and site areas.	Palm tree ring, +12'-0". Coord. tree ring dia. with Landscape Architect. See detail 5/E4.01.	Hydrel Lighting	Aspen A-P2-80CRI-30K-12-55DEG-FLC Tree Ring: TRAR 6FX Transformer: TM100 277	LED low voltage "bullet" fixture mounted to palm tree via tree ring. (6) fixtures per tree ring, 3-up & 3-down. "U" on symbol denotes "UP" fixtures. Provide with remote 12V transformer.	LED MR16	923 ea.	77 ea	72 total
	S3	Site/pool deck walkway.	12' Pole on concrete base. See detail 6/E4.01.	Visionaire Lighting	PRE-2-M-T3-32LC-7-3K-UNV-PT-BZ-WSC-20 POLE: RNTS-4R-11-12-9BC-343-TR3-BZ	LED pedestrian pole fixture on concrete pole base. Provide with motion sensor.	LED	7687	105	73
	S4	Stage shade structure.	+8'-0" on pole of structure.	Hevi-Lite	HL-360-WT-8LED-E-FL-12-LA-4 xfmr: HLT-DB-50	LED compact adjustable accent light. Machined aluminum. 1/2" NPS adjustable mounting stem. White finish. 3500K. Provide with 12v direct burial transformer.	LED	565	67	8.4

Interior Lighting Fixture Schedule

Symbol	Label	Area Utilized	Mounting	Manufacturer	Catalog Number	Description	Lamp	Lumens	Lumens Per Watt	Wattage
	F1	Offices	Recessed	Lithonia	2BLT4-48L-ADP-GZ1-LP835	LED recessed direct/indirect 2x4 fixture. 3500K	LED	4960	130.5	38
	F1A	classroom	Recessed	Lithonia	2BLT4-72L-ADP-GZ1-LP835	LED recessed direct/indirect 2x4 fixture. 3500K	LED	7245	119	59
	F2	Storage	Recessed	Lithonia	2GTL4-40L-RW-A19-GZ1-LP835	LED recessed prismatic 2x4 fixture. 3500K	LED	3922	131	30
	F3	Corridors/lockers/ restrooms.	Recessed	Lumenpulse	LCRS-A-FD-277-R-L20-35K-80-W-XX-SB-MWH-RD-XX-NA	LED recessed 4" aperture downlight. 3500K	LED	2313	116	20
	F4	Utility rooms	Pendant	Lithonia	ZL1N-L48-5000LM-FST-MVOLT-35K-80CRI-WH-ZACVH	LED 48", pendant mounted, lensed strip light. 3500K	LED	4725	112.5	42
	F4A	Utility rooms	Surface	Lithonia	ZL1N-L48-5000LM-FST-MVOLT-35K-80CRI-WH	LED 48", surface mounted, lensed strip light. 3500K	LED	4725	112.5	42
	F5	Locker rooms/restrooms & kitchen	Surface	Lithonia	LBL4-6000LM-80CRI-35K-MIN1-GZT-MVOLT	LED surface wrap 1x4 nominal. 3500K	LED	6101	123	50
	F6	Classroom	Pendant	3G Lighting	3G-2PLI-DI-L1000-L500-S80-35K-UNV-DIM-FL-WSO-WH-1C-S12	LED 12' linear direct-indirect pendant fixture. 2"W x 4"H. White finish, 3500K.	LED	18000	120	150
	F7	Pool equip./chemical rooms.	Surface	ILLUMINA	BS100LED-4-HT-MO-WT35-SM-EOS	LED surface mounted vapor tight 4' fixture. Corrosion resistant. Integral exterior occupancy sensor.	LED	6615	110	60
	F8	Lounge	Pendant	Delray Lighting	BG67-4-W-LO-W35-CR-D	LED Decorative pendant fixture. 48" dia.	LED	5040	74	68
	F9	Restroom vanity.	Surface, wall above mirror.	Lithonia	FMVTSL-36IN-MVOLT-30K-90CRI-BN	LED surface wall mounted vanity fixture.	LED	1919	73	26
	F10	Outdoor shower	Recessed	Indy	L6-17LM-35K-MVOLT-G4-80CRI-ZT-WPR-CSS-WET	LED recessed 6" aperture downlight. Wet Location. 3500K	LED	1462	92	16
	X1	Egress path	Surface, ceiling or wall per plans.	Lithonia	LE S-1-R-VR	LED exit sign with single face & mounting as shown on plans. provide directional chevrons as shown on plans. Provide vandal resistant shield.	LED	---	---	5
	X2	Egress path	Surface, ceiling or wall per plans.	Lithonia	LE S-2-R-VR	LED exit sign with single face & mounting as shown on plans. provide directional chevrons as shown on plans. Provide vandal resistant shield.	LED	---	---	5
	X1W	Egress path	Surface, ceiling or wall per plans.	Lithonia	WLTE-W-1-R-TP WET LOCATION LISTED	LED exit sign with single face & mounting as shown on plans. provide directional chevrons as shown on plans.	LED	---	---	5
	X2W	Egress path	Surface, ceiling or wall per plans.	Lithonia	WLTE-W-2-R-TP WET LOCATION LISTED	LED exit sign with double face & mounting as shown on plans. provide directional chevrons as shown on plans.	LED	---	---	5

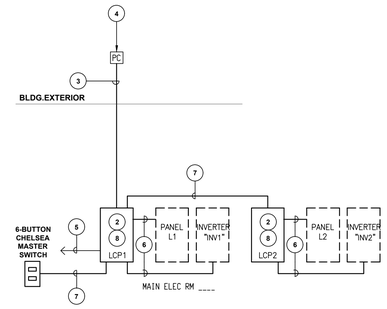

LIGHTING CONTROL SINGLE LINE DIAGRAM NOTES

1. **3/4"C. WITH DATA CONDUCTORS AS REQUIRED.**
2. **PROGRAMMABLE LIGHTING CONTROL PANEL.**
3. **1/2"C. WITH CONDUCTORS AS REQUIRED.**
4. **OUTDOOR PHOTOCELL ON ROOF. MOUNT TO ROOF PER MANUFACTURERS RECOMMENDATIONS.**
5. **1/2"C.O. TO TELEPHONE BACKBOARD.**
6. **1"C. WITH CONDUCTORS AS REQUIRED.**
7. **CAT-5e-3/4"C.- 4 TWISTED PAIR.**
8. **nLIGHT ARP INTENC08 NLT 8SPR MVOLT 1VB SC SM DTC OR APPROVED EQUAL.**

TYPICAL LIGHTING CONTROL PANEL DETAIL

SCALE: NONE — 1

LIGHTING CONTROL PANEL "LCP1"

MOUNTING: SURFACE — PHOTOCELL: YES

PANEL	CIRCUIT	RELAY	DESCRIPTOIN	ZONE TYPE	NOTES
INV1	1	1	PED. POLE LTS.	T/P	EMERGENCY
INV1	2	2	PED. POLE LTS.	T/P	EMERGENCY
INV1	3	3	SITE TREE LTS.	T/P	EMERGENCY
		4	SPARE		
		5	SPARE		
		6	SPARE		
L1	3	7	2ND FLR. EXT. WALL PK		
L1	1	8	1ST FLR. EXT. DN LTS.		

T/T TIMECLOCK ON/OFF
T/P TIMECLOCK ON/ PHOTOCELL OFF
P/T PHOTOCELL ON/TIMECLOCK OFF
P/P PHOTOCELL ON/PHOTOCELL OFF

LIGHTING CONTROL PANEL "LCP2"

MOUNTING: SURFACE — PHOTOCELL: YES

PANEL	CIRCUIT	RELAY	DESCRIPTOIN	ZONE TYPE	NOTES
INV2	1	1	SITE TREE LTS.	T/T	EMERGENCY
INV2	2	2	SITE PED. POLES	T/P	EMERGENCY
INV2	3	3	EXTERIOR BLDG. MTD. LTS.	P/P	EMERGENCY
		4	SPARE		
		5	SPARE		
		6	SPARE		
		7	SPARE		
		8	SPARE		

T/T TIMECLOCK ON/OFF
T/P TIMECLOCK ON/ PHOTOCELL OFF
P/T PHOTOCELL ON/TIMECLOCK OFF
P/P PHOTOCELL ON/PHOTOCELL OFF

FBA Engineering / Plot Date: 9/26/2023 11:05 AM / Plotted by: Steve Roth / Drawing Location: I:\535\050\E-0.02_535050.dwg

DIGALERT — DIAL TOLL FREE 1-800-422-4133 AT LEAST TWO DAYS BEFORE YOU DIG
UNDERGROUND SERVICE ALERT OF SOUTHERN CALIFORNIA

BASIS OF BEARINGS:

BEARINGS SHOWN HEREON ARE BASED ON THE CENTERLINE OF 162 ND STREET (FORMERLY MARKET STREET) BEING N 89° 55' 30" E SHOWN ON TRACT NO. 10901, M.B. 254/31-32

BENCHMARK:

THE CITY OF GARDENA BENCHMARK NO. 5D-15 ELEV. = 43.508

CONSULTANT:
FBA Engineering
Consulting Electrical Engineers
150 Paularino Avenue Suite A120
Costa Mesa, CA 92626
949.852.9995 • 949.852.1657 (fax)
fbaengr.com
FBA Job Number: 535050
REGISTERED PROFESSIONAL ENGINEER — 10372 — EXP. 09-30-24 — ELECTRICAL — STATE OF CALIFORNIA
05/01/2023

PREPARED UNDER THE SUPERVISION OF:
RJM DESIGN GROUP
31591 Camino Capistrano
San Juan Capistrano, CA 92675
www.RJMdesigngroup.com
[949] 493-2690 fax
[949] 493-2600 phone
LICENSED LANDSCAPE ARCHITECT — Signature — 05/30/2023 — Expiration Date — 5-31-2025 — STATE OF CALIFORNIA

REVISIONS			
NO.	DESCRIPTION	DATE	APPROVED
1	90% CD SUBMITTAL	12/15/2022	
2	100% CD SUBMITTAL	05/01/2023	
3	FINAL SUBMITTAL	10/02/2023	

CITY OF GARDENA
DEPARTMENT OF PUBLIC WORKS - ENGINEERING
LIGHTING FIXTURE SCHEDULE
COMMUNITY AQUATICS & SENIOR CENTER
E-0.02

	INITAL	DATE	APPROVED BY:
DESIGNED BY	SR	11/14/2022	
DRAWN BY	SR	09/26/2023	DATE
CHECKED BY	BZ	09/28/2023	DIRECTOR OF PUBLIC WORKS

SHT. 143 OF 195 — DWG. NO. 5-2606

REF FILES: I:\535\050\E-0.02_535050.DWG
PLOT TIME: 9/26/2023 11:05:26 AM

MULTIPLE ZONE SPACE W/ DAYLIGHTING & EM (INV/GEN)

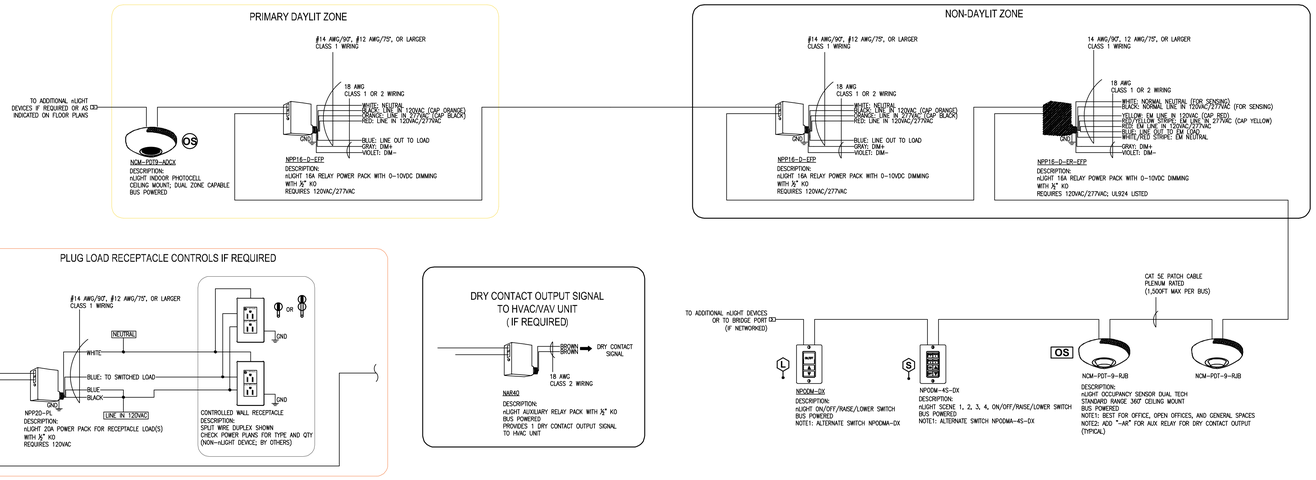

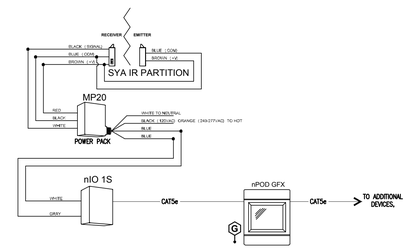

1 – TYPICAL PARTITION CONTROL DETAIL

LIGHTING CONTROL GENERAL NOTES

1. THE TYPICAL CONTROL DIAGRAM IS AN EXAMPLE ONLY AND DEPICTS ONLY THE INTENT OF THE LIGHTING CONTROLS. LIGHTING CONTROL SYSTEM BASIS OF DESIGN IS AN nLIGHT SYSTEM BY ACUITY CONTROLS.
2. PROVIDE MANUFACTURER SPECIFIC INSTALLATION SHOP DRAWINGS. SHOP DRAWINGS SHALL INCLUDE 1/8 SCALE FLOOR PLANS INDICATING ALL REQUIRED CONTROL DEVICE LOCATIONS AND POINT-TO-POINT WIRING. SHOP DRAWINGS SHALL INCLUDE PRODUCT DATA CUT SHEETS AND SINGLE LINE SCHEMATIC DIAGRAM.
3. WHETHER OR NOT DETAILED ON ELECTRICAL DRAWINGS, PROVIDE ALL CONTROL DEVICES AS REQUIRED FOR A COMPLETE, FULLY OPERABLE AND CODE COMPLIANT SYSTEM.
4. PROVIDE UL924 DEVICES IN ANY AREA THAT REQUIRES EMERGENCY EGRESS LIGHTING WHETHER OR NOT SPECIFICALLY HEREIN DETAILED. REFER TO LIGHTING PLANS FOR ALL EMERGENCY EGRESS 'EM' LIGHTING FIXTURES.
5. PROVIDE CONTROL DEVICES AS REQUIRED FOR LIGHTING ZONES AS SHOWN ON LIGHTING PLANS. SCHEMATIC DIAGRAM EXAMPLES SHOWN HEREIN ARE NOT SPECIFIC FOR EACH LIGHTING CONTROL CONDITION DEPICTED ON LIGHTING PLANS.
6. ALL 0-10VDC DIMMING CONDUCTORS SHALL BE INSTALLED IN CONDUIT.
7. VERIFY CORRECT LIGHTING CONTROL CONFIGURATIONS AND OPERATION IN EACH ROOM. REFER TO LIGHTING PLANS.
8. SIMULATE NORMAL SOURCE POWER FAILURE BY 'OPENING' (TURN OFF) BUILDING MAIN SERVICE DISCONNECT AND VERIFY CONNECTIONS AND OPERATION OF UL 924 DEVICES FOR EMERGENCY LIGHTING FIXTURES.
9. SETUP, PROGRAM, AND FUNCTION TEST LIGHTING CONTROL SYSTEMS TO PERFORM EACH OF THE INDICATED CONTROL FUNCTIONS.
10. REMOTE LED DRIVERS AND/OR LIGHTING CONTROL RELAYS/RELAY PANELS SHALL BE MOUNTED IN NEAREST ACCESSIBLE CEILING SPACE AND/OR UTILITY ROOM CEILING SPACE. WHERE THIS IS NOT POSSIBLE, AND A CEILING ACCESS PANEL IS REQUIRED, THE LOCATION OF THE ACCESS PANEL SHALL BE REVIEWED AND APPROVED BY THE ARCHITECT PRIOR TO INSTALLATION.

T24 COMPLIANT SEQUENCE OF OPERATION:

1. OCCUPANCY SENSOR PROVIDES AUTOMATIC ON/OFF OF LIGHTS/LOAD BASED ON ROOM OCCUPANCY (USE DEFAULT TIME DELAY FOR OCCUPANCY SENSOR)
2. DUAL ZONE PHOTOCELL SHALL AUTOMATICALLY REDUCE GENERAL LIGHTING IN BOTH PRIMARY AND SECONDARY DAYLIT ZONES BASED ON DAYLIGHT TO MAINTAIN DESIGN ILLUMINANCE.
3. SWITCH PROVIDES MANUAL OVERRIDE OF THE LIGHTS. NPODM-4S-DX PROVIDES 4 PRESET SCENES PLUS ALL ON/OFF/RAISE/LOWER SCENE SWITCH) . NPOD-TOUCH PROVIDES 16 CHANNELS/ZONES FOR ON/OFF/RAISE/LOWER CONTROL AND 16 PRESET SCENES.
4. UPON LOSS OF NORMAL POWER, ALL "-ER" POWER PACK (S) SHALL SHUNT CLOSED AND KEEP 0-10VDC DIMMING AT HIGH END TRIM LEVEL.

nLIGHT SYSTEM NOTE:

1. OCCUPANCY SENSOR IS CAPABLE OF DOING PARTIAL ON 50%-70% LIGHTING POWER AND FULL AUTO OFF. PROVIDE IN SPACES WHERE REQUIRED SUCH AS CONFERENCE ROOMS, OFFICES < 250SQFT, MULTIPURPOSE ROOMS < 1000SQFT, AND CLASSROOMS.
2. OCCUPANCY SENSORS HAVE DRY CONTACT OUTPUT OPTION FOR HVAC SYSTEM; SPECIFY "-AR" OPTION ON OCCUPANCY SENSOR; REFER TO SPEC SHEET.

1-ZONE SMALL ROOM

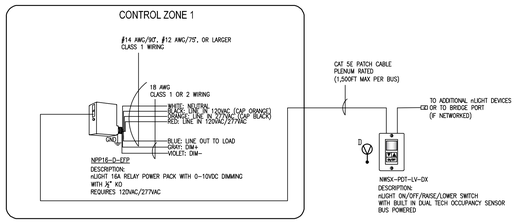

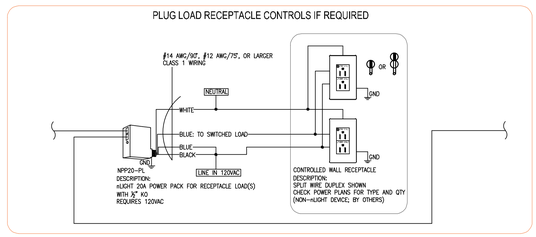

TITLE 24 COMPLIANT SEQUENCE OF OPERATION:

1. OCCUPANCY SENSOR PROVIDES AUTOMATIC ON/OFF OF LIGHTS/LOAD BASED ON ROOM OCCUPANCY (USE DEFAULT TIME DELAY FOR OCCUPANCY SENSOR) .
2. SWITCH PROVIDES MANUAL OVERRIDE OF THE LIGHTS: ON/OFF/RAISE/LOWER.

nLIGHT SYSTEM NOTE:

1. OCCUPANCY SENSOR IS CAPABLE OF DOING PARTIAL ON 50%-70% LIGHTING POWER AND FULL AUTO OFF. PROVIDE IN SPACES WHERE REQUIRED SUCH AS CONFERENCE ROOMS, OFFICES < 250SQFT, MULTIPURPOSE ROOMS < 1000SQFT, AND CLASSROOMS.

EXTERIOR LIGHTS W/ FEW ZONES

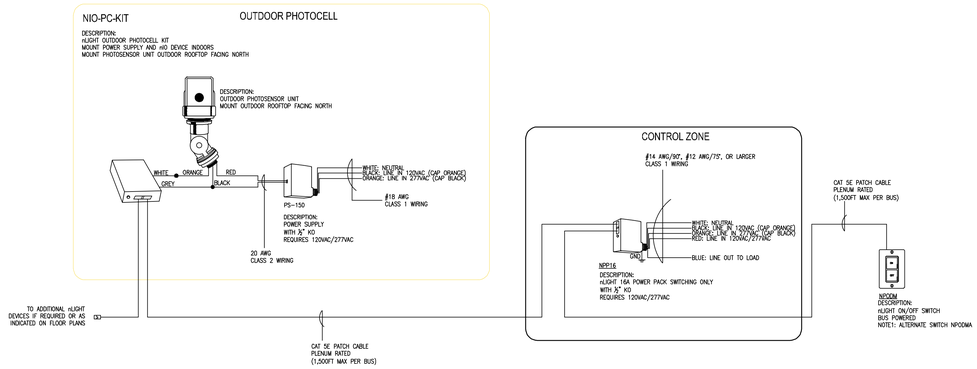

T24 COMPLIANT SEQUENCE OF OPERATION:

1. PHOTOCELL OR ASTRONOMICAL TIME-SWITCH CONTROL SHALL AUTOMATICALLY SHUT-OFF EXTERIOR LIGHTING WHEN DAYLIGHT IS AVAILABLE.
2. AUTOMATIC SCHEDULING CONTROLS VIA TIME CLOCK AT NLIGHT ECLYPSE CONTROLLER (NECY) SHALL REDUCE LIGHTING POWER BY 50%-90% AND FULL OFF DURING UNOCCUPIED TIMES.
3. AUTOMATIC SCHEDULING CONTROLS VIA TIME CLOCK AT NLIGHT ECLYPSE CONTROLLER (NECY) SHALL ALLOW SCHEDULING OF A MINIMUM OF TWO NIGHTTIME PERIODS AT DIFFERENT LIGHTING LEVELS.
4. SYSTEM MAY INCLUDE AN OVERRIDE FUNCTION WALL SWITCH THAT TURNS LIGHT ON FOR 2 HOURS MAX DURING DIMMED OR OFF STATE.

nLIGHT SYSTEM NOTE:

1. EXTERIOR LIGHTING SHALL COMPLY WITH T24 2019 PART 6 SECTION 130.2c3 MOTION SENSOR CONTROLS NOT SHOWN IN THIS DIAGRAM.

DIGALERT
DIAL TOLL FREE
1-800-422-4133
AT LEAST TWO DAYS BEFORE YOU DIG
UNDERGROUND SERVICE ALERT OF SOUTHERN CALIFORNIA

BASIS OF BEARINGS:

BEARINGS SHOWN HEREON ARE BASED ON THE CENTERLINE OF 162 ND STREET (FORMERLY MARKET STREET) BEING N 89° 55' 30" E SHOWN ON TRACT NO. 10901, M.B. 254/31-32

BENCHMARK:

THE CITY OF GARDENA BENCHMARK NO. 5D-15 ELEV. = 43.508

CONSULTANT:

FBA Engineering
Consulting Electrical Engineers
150 Paularino Avenue Suite A120
Costa Mesa, CA 92626
949.852.9995 • 949.852.1657 (fax)
fbaengr.com
FBA Job Number: 535050

REGISTERED PROFESSIONAL ENGINEER No. 10372 09-30-24 ELECTRICAL STATE OF CALIFORNIA

05/01/2023

PREPARED UNDER THE SUPERVISION OF:

RJM DESIGN GROUP
31591 Camino Capistrano
San Juan Capistrano, CA 92675
www.RJMdesigngroup.com
[949] 493-2690 fax
[949] 493-2600 phone

REGISTERED LANDSCAPE ARCHITECT STATE OF CALIFORNIA

REVISIONS			
NO.	DESCRIPTION	DATE	APPROVED
1	90% CD SUBMITTAL	12/15/2022	
2	100% CD SUBMITTAL	05/01/2023	
3	FINAL SUBMITTAL	10/02/2023	

CITY OF GARDENA
DEPARTMENT OF PUBLIC WORKS - ENGINEERING

LIGHTING CONTROLS

COMMUNITY AQUATICS & SENIOR CENTER

E-0.02A

	INITAL	DATE	APPROVED BY:
DESIGNED BY	SR	11/14/2022	
DRAWN BY	SR	09/26/2023	DATE
CHECKED BY	BZ	09/28/2023	DIRECTOR OF PUBLIC WORKS

SHT. 144 OF 195 DWG. NO. 5-2606

FBA Engineering / Plot Date: 9/26/2023 11:05 AM / Plotted by: Steve Roth / Drawing Location: I:\535\050\E-0.02_535050.dwg

REF FILES: I:\535\050\E-0.02_535050.DWG
PLOT TIME: 9/26/2023 11:05:27 AM

UL924 EM SHUNT RELAY FOR NSP5-PCD-SERIES DEVICE



PP16-SHUNT-EITP
DESCRIPTION:
SENSORSWITCH EM UL924 SHUNT RELAY
WITH ½" KO
REQUIRES 120VAC/277VAC UNSWITCHED NORMAL HOT FOR SENSING AND
REQUIRES SEPARATE 120VAC/277VAC UNSWITCHED EM HOT FOR EM LOAD
(REFER TO SPEC SHEET FOR WIRING DETAL TO BYPASS NSP5-PCD DEVICE)
NOTE1: WIRE TO EM POWERED NLIGHT NSP5-PCD-SERIES DEVICE
NOTE2: ONE PER EM POWERED NLIGHT NSP5-PCD-SERIES DEVICE

FORWARD PHASE DIMMING LOADS

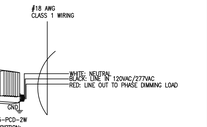

NSP5-PCD-2W
DESCRIPTION:
nLIGHT PHASE DIMMING POWER PACK WITH ½" KO
FOR 2-WIRE FORWARD PHASE DIMMING (120-277VAC)
MAX LOAD CAPACITY 575W@120VAC, 1375W@277VAC
NOTE1: WORKS FOR TRIAC, LEADING EDGE AND INCANDESCENT DIMMABLE LOADS

TO ADDITIONAL nLIGHT DEVICES IF REQUIRED OR AS INDICATED ON FLOOR PLANS

REVERSE PHASE DIMMING LOADS

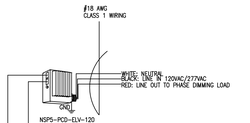

NSP5-PCD-ELV-120
DESCRIPTION:
nLIGHT PHASE DIMMING POWER PACK WITH ½" KO
FOR ELECTRONIC LOW VOLTAGE, REVERSE PHASE (120VAC ONLY)
MAX LOAD CAPACITY 475W@120VAC
NOTE1: WORKS FOR ELV AND TRAILING EDGE DIMMABLE LOADS

EMERGENCY 0-10VDC DIMMING LOADS

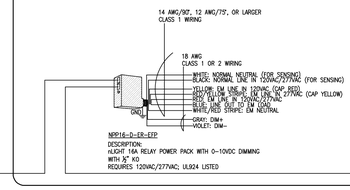

NPP16-D-ER-EITP
DESCRIPTION:
nLIGHT 16A RELAY POWER PACK WITH 0-10VDC DIMMING
WITH ½" KO
REQUIRES 120VAC/277VAC; UL924 LISTED

TO ADDITIONAL nLIGHT DEVICES IF REQUIRED OR AS INDICATED ON FLOOR PLANS

MAGNETIC LOW VOLTAGE DIMMING LOADS

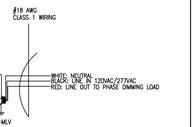

NSP5-PCD-MLV
DESCRIPTION:
nLIGHT PHASE DIMMING POWER PACK WITH ½" KO (120-277VAC)
FOR MAGNETIC LOW VOLTAGE (MLV) DIMMABLE LOADS
MAX LOAD CAPACITY 575W@120VAC, 1375W@277VAC

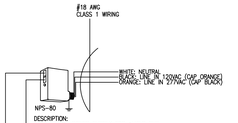

NPS-80
DESCRIPTION:
nLIGHT 80mA POWER SUPPLY FOR nLIGHT BUS
WITH ½" KO, REQUIRES 120VAC/277VAC
NOTE1: REQUIRED FOR NSP5-PCD DEVICES WHEN BUS POWER IS NOT AVAILABLE ON CAT 5E; EACH PORT POWERS UP TO 4 NSP5-PCD DEVICES
NOTE2: NOT REQUIRED IF NPP16-SERIES RELAY POWER PACK IS UTILIZED

GENERAL SYSTEM NOTES:

ON DIGITAL SYSTEMS, ALL DEVICES TO BE CONNECTED IN A DAISY CHAIN PATTERN SO THAT THE FIRST AND LAST DEVICE IN THE CHAIN HAS AN OPEN PORT. NO T-TAP CONNECTIONS. EXCEPTIONS FOR NLIGHT "RJB" DEVICES UTILIZING THEIR INCLUDED RJ45 SPLITTER INSIDE PACKAGING.

ON DIGITAL SYSTEMS, CONTRACTOR SHALL NOTE AND LABEL ADDRESS AND LOCATION OF EACH DEVICE ON THE SYSTEM ONE-LINE DIAGRAMS OR SYSTEM LAYOUT DRAWINGS AT TIME OF INSTALLATION.

WIRING SHALL CONFORM TO THE NATIONAL ELECTRICAL CODE (NEC) AND APPLICABLE LOCAL CODES, INCLUDING PROVISION OF EQUIPMENT GROUNDING AS REQUIRED BY THE NEC.

POWER CONDUCTORS SHALL BE SIZED PER THE NEC AMPACITY TABLES (ARTICLE 310), INCLUDING ADJUSTMENT FACTOR AND NEUTRAL CONDUCTOR REQUIREMENTS (FEED AND BRANCH NEUTRAL CONDUCTORS MUST BE COUNTED AS CURRENT CARRYING CONDUCTORS). RUN SEPARATE NEUTRAL CONDUCTORS FOR EACH DIMMED LOAD CIRCUIT.

FOR 0-10VDC DIMMING SYSTEMS, VIOLET AND GRAY CONDUCTORS ARE FOR 0-10VDC LOW VOLTAGE TERMINATIONS ONLY. NEVER TERMINATE LINE VOLTAGE (120/230/277VAC) TO VIOLET AND GRAY.

CONTRACTOR IS RESPONSIBLE FOR ALL CONTROL TERMINATIONS. NO SPLICES ARE PERMITTED IN CONTROL WIRING.

POWER AND CONTROL CONDUCTORS MUST NOT SHARE THE SAME RACEWAY OR CONDUIT EXCEPT WHERE ALLOWED.

LIGHTING CONTROL EQUIPMENT MUST BE INSTALLED, MAINTAINED, AND OPERATED IN AN "OFFICE CLEAN" DRY ENVIRONMENT, INDOOR DRY LOCATIONS ONLY, 10% - 90% RELATIVE HUMIDITY; AMBIENT TEMPERATURE 0°- 40°C (32°-104°F) - 0°- 35°C (32°- 95°F) RECOMMENDED.

SENSORS IN ELECTRICAL/MECHANICAL LOCATIONS NEED TO BE VERIFIED WITH AUTHORITY HAVING JURISDICTION. REFER TO NEC 110.26.D.

RELAY AND DIMMER PANEL SCHEDULES SHALL CONTAIN BREAKER PANEL INPUTS AS WELL AS ZONES/AREAS CONTROLLED.

VERIFY MAXIMUM CABLE LENGTHS BASED ON CONTROL SYSTEM. MANUFACTURER IS NOT RESPONSIBLE FOR SYSTEMS EXCEEDING CABLING PARAMETERS.

LOW VOLTAGE CABLE MUST BE INSTALLED AT LEAST 12 INCHES FROM ALL LINE VOLTAGE CONDUCTORS EXCEPT TO CROSS OR MAKE TERMINATIONS. CAT. 5 CABLE MUST BE KEPT AWAY FROM ALL EMF DEVICES SUCH AS BALLASTS OR TRANSFORMERS.

CONTRACTOR/INSTALLER TO VERIFY WITH THE MANUFACTURER TYPE AND QUANTITY OF OCCUPANCY SENSORS TO ENSURE 100% COVERAGE OF THE SPACE(S) WHERE SHOWN CONTROLLED BY OCCUPANCY SENSOR(S).

ONSITE SYSTEM STARTUP, PROGRAMMING AND END USER TRAINING SHALL BE PERFORMED BY FACTORY AUTHORIZED TECHICIAN/REPRESENTATIVE. CONTRACTOR SHALL INCLUDE THIS SERVICE LINE ITEM IN THEIR BID PACKAGE.

IMPORTANT: **MANUFACTURER OR AUTHORIZED LIGHTING REPRESENTATIVE OF CONTROL SYSTEM MUST VERIFY TYPE, QUANTITIES, PLACEMENT OF DEVICES TO MEET DESIGN INTENT AND TITLE 24 CODE COMPLIANCE, AND PROVIDE SHOP DRAWINGS FOR SPECIFIER APPROVAL. THIRD PARTY TAKE-OFFS OR LAYOUTS WILL NOT BE ACCEPTED. NO EXCEPTIONS.**

FBA Engineering / Plot Date: 9/26/2023 11:05 AM / Plotted by: Steve Roth / Drawing Location: I:\535\050\E-0.02_535050.dwg

DIGALERT
DIAL TOLL FREE
1-800-422-4133
AT LEAST TWO DAYS BEFORE YOU DIG
UNDERGROUND SERVICE ALERT OF SOUTHERN CALIFORNIA

BASIS OF BEARINGS:
BEARINGS SHOWN HEREON ARE BASED ON THE CENTERLINE OF 162 ND STREET (FORMERLY MARKET STREET) BEING N 89° 55' 30" E SHOWN ON TRACT NO. 10901, M.B. 254/31-32

BENCHMARK:
THE CITY OF GARDENA BENCHMARK NO. 5D-15 ELEV. = 43.508

CONSULTANT:
FBA Engineering
Consulting Electrical Engineers
150 Paularino Avenue Suite A120
Costa Mesa, CA 92626
949.852.9995 • 949.852.1657 (fax)
fbaengr.com
FBA Job Number: 535050

REGISTERED PROFESSIONAL ENGINEER No. 10372 Exp. 09-30-24 ELECTRICAL STATE OF CALIFORNIA
05/01/2023

PREPARED UNDER THE SUPERVISION OF:
RJM DESIGN GROUP
31591 Camino Capistrano
San Juan Capistrano, CA 92675
www.RJMdesigngroup.com
[949] 493-2690 fax
[949] 493-2600 phone

LICENSED LANDSCAPE ARCHITECT — STATE OF CALIFORNIA — Signature — 09-30-2023 Renewal Date — 5-26-2023 Date

REVISIONS			
NO.	DESCRIPTION	DATE	APPROVED
1	90% CD SUBMITTAL	12/15/2022	
2	100% CD SUBMITTAL	05/01/2023	
3	FINAL SUBMITTAL	10/02/2023	

CITY OF GARDENA
DEPARTMENT OF PUBLIC WORKS - ENGINEERING
LIGHTING CONTROLS
COMMUNITY AQUATICS & SENIOR CENTER
E-0.02B

	INITAL	DATE
DESIGNED BY	SR	11/14/2022
DRAWN BY	SR	09/26/2023
CHECKED BY	BZ	09/28/2023

APPROVED BY:
DATE
DIRECTOR OF PUBLIC WORKS
SHT. 145 OF 195 DWG. NO. 5-2606

FILE PATH: I:\535\050\E-0.02_535050.DWG
PLOT TIME: 9/26/2023 11:05:27 AM

TYPE "F6"

3G LIGHTING

3G-2PLI-DI

2" LINEAR PENDANT
DIRECT/INDIRECT



Narrow 2" aperture with one piece extruded aluminum housing
Individual or continuous runs available in multiple run configurations
Direct/indirect distribution with multiple lumen output options
LED system with performance up to 140 lumens per watt
Extruded acrylic lens available in flush, 1° and 2° drop lens options
Widespread and asymmetric optics available
1% dimming standard with several driver options

ORDERING INFORMATION

PROJECT: _____ TYPE: _____

CATALOG #: _____ DATE: _____

CAT. NO	LUMEN OUTPUT (DIRECT)	LUMEN OUTPUT (INDIRECT)	CRI	COLOR TEMP
3G-2PLI-DI	**L250** - LOW OUTPUT (250 LM/FT)[1] **L500** - MEDIUM OUTPUT (500 LM/FT) **L750** - HIGH OUTPUT (750 LM/FT) **L1000** - VERY HIGH OUTPUT (1000 LM/FT)[1,2] **LC___** - CUSTOM OUTPUT (SPECIFY LM/FT)[1] *Specify custom lumen outputs in 50lm increments (ie: LC600, LC650, LC700) Custom output cannot exceed LC1000	**L250** - LOW OUTPUT (250 LM/FT)[1] **L500** - MEDIUM OUTPUT (500 LM/FT)[1] **L750** - HIGH OUTPUT (750 LM/FT) **L1000** - VERY HIGH OUTPUT (1000 LM/FT)[1,2] **LC___** - CUSTOM OUTPUT (SPECIFY LM/FT)[1] *Specify custom lumen outputs in 50lm increments (ie: LC600, LC650, LC700) Custom output cannot exceed LC1000	**S80** - 83+ CRI (STANDARD) **H90** - 93+ CRI	**27K** - 2700K **30K** - 3000K **35K** - 3500K **40K** - 4000K

VOLTAGE	DRIVER	LENS OPTION (DIRECT)	LENS OPTION (INDIRECT)	FINISH
UNV - 120-277V **347** - 347V (0-10V ONLY)	**DIM** - 0-10V (STANDARD - 100-1%) **DHL2** - LUTRON HI-LUME® 1DET (100-1% ECOSYSTEM) **DALI** - DALI (100-1%)[4] **D01** - 0-10V (100-0.1%)	**FL** - FLUSH **D01** - 1° DROP LENS **D02** - 2° DROP LENS **DASY** - ASYMMETRIC OPTIC	**FL** - FLUSH **WSO** - WIDESPREAD OPTIC **ASY** - ASYMMETRIC OPTIC	**WH** - WHITE (STANDARD) **SV** - SILVER **BK** - BLACK All mounting canopies available in white as standard

CABLE LENGTH	CIRCUITING	OPTIONS	LENGTH (FEET)
60 - 60" **120** - 120"	**1C** - 1 CIRCUIT **2C** - 2 CIRCUIT	**EMB** - INTEGRAL EMERGENCY BATTERY (4' SECTION ONLY) **EMC** - EMERGENCY CIRCUIT	**S** - 12" (STRAIGHT RUN)* **L** - ____'X ____' (L-SHAPE) **U** - ____'X ____' X ____' (U-SHAPE) **R** - ____'X ____' (RECTANGLE/SQUARE) **T** - ____'X ____' (T-SHAPE) **X** - ____'X ____' (X-SHAPE) **CUS** - ____ (CUSTOM LAYOUT - PROVIDE DRAWING) * Individual units available in 2', 3', 4', 5', 6', and 8' Continuous runs available in 1' increments as standard.

1. L250 (250LM/FT) not available in 3' and 3' lengths (Please specify L-LO00 for 3' and 3' fixture length when outputs lower than 500LM/FT are required)
2. L1000 (1000LM/FT) not available with H90 (83+ CRI)
3. L1000 (1000LM/FT) not available with ASY (Indirect Asymmetric optic)
4. DALI-2 (Type 8) provided as standard. Please consult factory for DALI (Type 8) options

OCTOBER 5, 2020

Copyright 2019 3G Lighting | www.3glighting.com | P: 905-850-2305 TF: 888-448-0440
3G reserves the right to change, without notice, specifications or materials for product improvement.

TYPE "F4"

LITHONIA LIGHTING®

Catalog Number
Notes
Type

LED Striplight

ZL1N

24", 48" and 96" Lengths

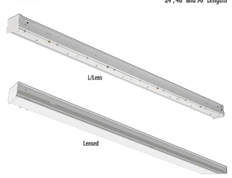

Buy American

FEATURES & SPECIFICATIONS

INTENDED USE — Built on the compact, low-profile Z strip channel, this LED strip offers long maintenance-free life, several color temperatures, lumen outputs and lengths. Ideal for new construction and retrofit applications in T5 and T8 lengths. Ideal for uplight and downlight in commercial, retail, manufacturing, warehouse, core and display applications. **Certain airborne contaminants can diminish the integrity of acrylic and/or polycarbonate. Click here for Acrylic-Polycarbonate Compatibility table for suitable uses.**

CONSTRUCTION — Compact-design channel and cover are formed from code-gauge cold-rolled steel. Easy to install one aligner included for continuous row mounting.

Finish: Paint options include high-gloss, baked white enamel (WH), galvanized (GALV), matte black (MB) and smoke gray (SKD®). After fabrication, five-stage iron phosphate pre-treatment ensures superior paint adhesion and rust resistance.

OPTICS — Standard diffuse snap-on/snap-off lens eliminates pixels, improves uniformity and minimizes glare. LiLENS option available.

ELECTRICAL — L70=60,000hours. Utilizes high-output LEDs integrated on a two-layer circuit board, ensuring cool-running operation. Optional internal pluggable wiring harness for reduced labor cost in row-mounting applications. (See PLR_ ordering information on page 2.) Electronic LED driver is rated for 75 input watts maximum (see Operational Data on page 4 for actual wattage consumption), **multi-volt input and 0-10V dimming standard.** This fixture is designed to withstand a maximum line surge of 2.5kV at 0.75kA combination wave for indoor locations, for applications requiring higher level of protection additional surge protection must be provided.

LEDs provide nominal 80 CRI at 3000 K, 3500 K, 4000 K, or 5000 K.

Lumen output up to 2,000 lumens per foot. In 86°F (30°C) ambient environments. Luminaire should be installed in applications where ambient temperatures do not exceed 86°F (30°C).

INSTALLATION — Use #6 hex-head cover for easy installation.

Fixture may be surface mounted (with or without 2SPRG hanger), pendant or stem mounted with appropriate mounting options. Three-point aligner locks in place for easy continuous row mounting.

LISTINGS — CSA certified to US and Canadian safety standards. For use in damp locations between -40°F (-40°C) and 86°F (30°C).

DesignLights Consortium® (DLC) Premium qualified product and DLC qualified product. Not all versions of this product may be DLC Premium qualified or DLC qualified. Please check the DLC Qualified Products List at www.designlights.org to confirm which versions are qualified.

BUY AMERICAN — Product with the BAA option is assembled in the USA and meets the Buy America(n) government procurement requirements under FAR, DFARS and DOT. Please refer to www.acuitybrands.com/buy-american for additional information.

WARRANTY — 5-year limited warranty. Complete warranty terms located at: www.acuitybrands.com/support/customer-support/terms-and-conditions

Note: Actual performance may differ as a result of end-user environment and application.

All values are design or typical values, measured under laboratory conditions at 25 °C.

Specifications subject to change without notice.

Capable Luminaire

This item is an A+ capable luminaire, which has been designed and tested to provide consistent color appearance and out-of-the-box control compatibility with simple commissioning.

- All configurations of this luminaire meet the Acuity Brands' specification for chromatic consistency
- This luminaire is part of an A+ Certified solution for nLight® control networks when ordered with drivers marked by a shaded background*
- This luminaire is part of an A+ Certified solution for nLight control networks, providing advanced control functionality at the luminaire level, when selection includes driver and control options marked by a shaded background*

To learn more about A+, visit www.acuitybrands.com/aplus.

*See ordering tree for details

Specification Sheet

TYPE "F3" downlights - lumencore

Small Downlight

LCRS

Project Name _____ Qty _____

Type _____ Catalog / Part Number _____



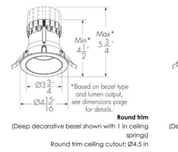

Round trim
(Deep decorative bezel shown with 1 in ceiling springs)
Round trim ceiling cutout: Ø4.5 in

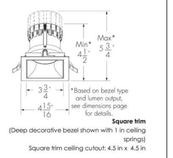

Square trim
(Deep decorative bezel shown with 1 in ceiling springs)
Square trim ceiling cutout: 4.5 in x 4.5 in

Photometric Summary

Based on Narrow Optic (nominal 25°), 4000K, CRI 80+

Nominal Lumens (lm)	Delivered Lumens (lm)	Insulated ceiling: Power (120V) (W)	Insulated ceiling: Efficacy (lm/W)	Non-insulated ceiling: Power (120V) (W)	Non-insulated ceiling: Efficacy (lm/W)
700	828	6.5	127	8.5	97
1000	1,070	8	134	10	107
1300	1,484	11	135	13	114
2000	2,313	18	129	20	116

[1] Consult website for latest IES files.

Optics

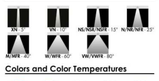

Colors and Color Temperatures



Controls



Certifications



Description

The Lumencore Small is a high-performance LED downlight for ceiling applications. Available in an array of trims and finishes, outputs (up to 4000lm), optics, color renderings, accessories, and a WET IP54 option, these luminaires are here to outperform. The Lumencore Small possesses a previously unseen lifespan, is quick to install, and can be used with a number of different control options.

Features

Output (nominal lumens)	700 lm, 1000 lm, 1300 lm, 2000 lm, 3000 lm, 4000 lm
Options	Emergency battery backup with hanger bar (Bodine BSL17C-C2), Emergency battery backup with hanger bar (Iota ILB-CP07-A TBTS), IP54-rating suitable for wet locations. For IP55 Shower Rated "Dead Front" applications see Lumencore Small Shower Rated specification sheet
Warranty	5-year limited warranty

Electrical and control

Wattage range	8.5W to 42W (wattage will vary based on voltage, output, color temperature, color rendering, optic, control and installation type, refer to Power Consumption table for details)

Physical

Trim	Round, Square trim with round hole, Trimless round, Square, Trimless square
Ceiling Thickness	0.04 in to 1 in ceiling thickness, 1.05 in to 2 in ceiling thickness
Tilt Optics Material	Clear polycarbonate
Weight	3.4 lbs with RM installation type, 4.75 lbs with NC installation type, 10.8 lbs with PC, IC, IC/AT and RMR installation types (weights are approximate based on the heaviest fixture configuration), please consult factory if exact fixture weight is needed

lumenpulse™ 1220 Marie-Victorin Blvd., Longueuil, QC. J4G 2H9, CA ✆ United States 617.307.5700 | Canada 1.877.937.3003 | 514.937.3003 ✆ 514.937.6289 info@lumenpulse.com www.lumenpulse.com

LMPG Inc. reserves the right to make changes to this product at any time without prior notice and such modification shall be effective immediately
2022.06.27 copyright © 2022 LMPG Inc.
En - 8.11

LITHONIA LIGHTING®

TYPE "F1"

Catalog Number
Notes
Type

BLT Series LED

2BLT4

2' x 4' LED



ADP Diffuser Option



Ribbed Reflector Option

Buy American

Specifications

Lengths: 47-3/4 (121.2)
Width: 23-3/4 (60.3)
Depth: 2-3/8 (6.0)
Depth with Air supply/return: 2-3/4 (6.9)

All dimensions are inches (centimeters) unless otherwise specified.

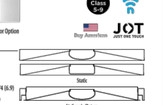

DIGITAL NAVIGATION
Ordering Tree | nLight Platform | Sensor Switch JOT | Photometrics | Performance Data

FEATURES & SPECIFICATIONS

INTENDED USE — The BLT Best-in-Value Low Profile LED luminaire features a popular center basket design that offers a clean, versatile style and volumetric distribution. High efficacy LED light engines deliver energy savings and low maintenance compared to traditional sources. An extensive selection of configurations and options make the BLT the perfect choice for many lighting applications including schools, offices and other commercial spaces, retail, hospitals and healthcare facilities. The low profile BLT design (2-3/8") also makes it an excellent choice for renovation projects.

CONSTRUCTION — Prior to fabrication, BLT components are coated with a proprietary paint blend and die-formed for dimensional consistency.

The BLT reflector is available in both smooth and ribbed finishes. Choose RB from the fixture style section below for a ribbed finish.

End plates contain easy-to-position integral T-bar clips for securely attaching the luminaire to the T-grid. For additional T-grid security, optional screw-on T-bar clips are available.

Diffusers are extruded from impact modified acrylic for increased durability.

LED boards and drivers are accessible from the plenum.

OPTICS — Volumetric illumination is achieved by creating an optimal mix of light to walls, partitions and vertical and horizontal work surfaces — rendering the interior spaces, objects and occupants in a more balanced, complementary luminous environment. High performance extruded acrylic diffusers conceal LEDs and efficiently deliver light in a volumetric distribution. Four diffuser choices available - curved and square designs with ribbed or a smooth frosted finish.

ELECTRICAL — Long-life LEDs, coupled with high-efficiency drivers, provide superior quantity and quality of illumination for extended service life, 80% LED lumen maintenance at 60,000 hours (L80/60,000). Color Variation within 3-step MacAdam ellipse (SDCM).

Non-Configurable BLT: Generic 0-10 volt dimming driver. Dims to 10%

Configurable BLT: available in High Efficiency (HE) versions for applications where a lower wattage (over the standard product) is required. The High Efficiency versions deliver 3 x 50 LPW and can be specified via the Lumen Package designations in the Ordering Information below.

eldoLED driver options deliver choice of dimming range, and choices for control, while assuring flicker-free, low-current inrush, 89% efficiency and low EMI.

Optional integrated nLight® controls make each luminaire addressable - allowing it to digitally communicate with other nLight enabled controls such as dimmers, switches, occupancy sensors and photocontrols. Connection to nLight is simple. It can be accomplished with integrated nLight AIR wireless IRD, RE37 sensors, or through standard Cat-5 cabling. nLight offers unique plug-and-play convenience as devices and luminaires automatically discover each other and self-commission. nLight AIR is commissioned easily through an intuitive mobile app.

Lumen Management: Unique lumen management system (option NDD) provides on board intelligence that actively manages the LED light source so that constant lumen output is maintained over the system life, preventing the energy waste created by the traditional practice of over-lighting.

Step-level dimming option allows system to be switched to 50% power for compliance with common energy codes while maintaining fixture appearance.

SENSOR — **Integrated sensor (individual control):** Sensor Switch WSTB2/10CX (Passive Infrared (PIR)) or WSDPITTBDCX (PIR/Microphonic) Dual Tech (PITT) Integrated occupancy sensor/automatic dimming photocell allows the luminaire to power off when the space is unoccupied or enough ambient light is entering the space. See page 4 for more details on the integrated sensor.

Integrated Sensor (nLight Wired Networking): This sensor is nLight-enabled, meaning it has the ability to communicate over an nLight network. When wired, using CAT-5 cabling, with other nLight-enabled sensors, power packs, or WallPods, an nLight control zone is created. Once linked to a Gateway, directly or via a Bridge, the zone becomes capable of remote status monitoring and control via SensorView software. See page 4 for the nLight sensor options.

Integrated Smart Sensor (nLight Air Wireless Platform): The BLT2 sensor is nLight AIR enabled, meaning it has the ability to communicate over the wireless nLight control platform. It is available with an automatic dimming photocell, and either a digital PIR or a microphonic (PDT) dual technology occupancy sensor. It pairs to other luminaires and wall switches through our mobile app, CLAIRITY, which allows for simple sensor adjustment. See page 4 for more details on the Integrated Smart Sensor.

Integrated Wireless Sensor (single room control): Sensor Switch WDTB2X AIR or ADVTITE5 luminaire-embedded occupancy and ambient light sensor allows the luminaire to power off when the space is unoccupied or when enough ambient light is entering the space. See page X for more details on the integrated wireless sensor.

INSTALLATION — The BLT's low profile design of only 2-3/8" provides increased installation flexibility especially in restrictive plenum applications. The BLT fits into standard 15/16" and exterior 9/16" T-grid ceiling systems.

Suitable for damp location.

For recessed mounting, in hard ceiling applications, Drywall Grid Adapters (DGA) are available as an accessory. See Accessories section.

LISTINGS — CSA Certified to meet U.S. and Canadian standards. IC rated. Tested in accordance with ISO 14644-1; suitable for ISO Class 5-9 positive and negative pressure clean rooms.

DesignLights Consortium® (DLC) Premium qualified product and DLC qualified product. Not all versions of this product may be DLC Premium qualified or DLC qualified. Please check the DLC Qualified Products List at www.designlights.org/QPL to confirm which versions are qualified.

BUY AMERICAN — Product with the BAA option is assembled in the USA and meets the Buy America(n) government procurement requirements under FAR, DFARS and DOT. Please refer to www.acuitybrands.com/buy-american for additional information.

WARRANTY — 5-year limited warranty. Complete warranty terms located at: www.acuitybrands.com/support/warranty/terms-and-conditions

NOTE: Actual performance may differ as a result of end-user environment and application.
All values are design or typical values, measured under laboratory conditions at 25 °C.
Specifications subject to change without notice.

Embed nLight controls today. Prepare for tomorrow.

Now	Tomorrow
User-friendly install	Scalability
Enhanced energy savings	Space configuration
Code compliance	Future-ready

Capable Luminaire

This item is an A+ capable luminaire, which has been designed and tested to provide consistent color appearance and out-of-the-box control compatibility with simple commissioning.

- All configurations of this luminaire meet the Acuity Brands' specification for chromatic consistency
- This luminaire is part of an A+ Certified solution for nLight® control networks when ordered with drivers marked by a shaded background*
- This luminaire is part of an A+ Certified solution for nLight control networks, providing advanced control functionality at the luminaire level, when selection includes driver and control options marked by a shaded background*

To learn more about A+, visit www.acuitybrands.com/aplus.

*See ordering tree for details

TYPE "F7"

Type: _____

Project: _____

ILLUMINA®

LED | WET | IP66 | IK05

LOGICA CANADIAN TITLE 20 TITLE 24 DLC ENERGY STAR cULus RoHS

BS100LED



- The ILLUMINA® BS100LED is corrosion, flame and vandal resistant.
- HOUSING: 100% UV stabalized polycarbonate, liquid silicone perimeter gasket with memory retention.
- DIFFUSER: Frosted UV stabilized polycarbonate diffuser, providing even light distribution.
- LUMENS:

2FT	4FT
LO: 3585 up to 3796 lm	**VLO:** 3954 up to 4187 lm
MO: 4780 up to 5062 lm	**LO:** 5012 up to 5837 lm
HO: 5975 up to 6327 lm	**MO:** 6615 up to 7004 lm
	HO: 8306 up to 8857 lm

- OPERATING TEMP:
  HT (AC Only) -40°F to 104°F (-40°C to 40°C)
  SA (AC & Emergency) 32°F to 104°F(0°C to 40°C)
- WEIGHT: **2FT:** 5 lbs. / 2.2 kg. **4FT:** 10 lbs. / 4.5 kg

APPLICATION: The BS100LED is ideal for various applications including retail, industrial, parking, garages, carport, parking structures, warehouses, breezeways, canopies, schools, and much more. It can be installed both indoor and outdoor.

CONFIGURATIONS

MODEL	LENGTH	OPERATION	OUTPUT	COLOR TEMP	INPUT	MOUNTING	OPTIONS
BS100LED	2 (ft)	HT (AC only)	VLO[1]	WT35 (3500K)	120-277V	SM[4] (surface mount)	SS (stainless steel clips)
BS100LED-RK[1]	4 (ft)	SA[2] (AC & EM)	LO	WT40 (4000K)	347V-480V	AC[5](whalen cable)	FP (hose protective - 3/4)
			MO	WT50 (5000K)		SPK[6](single pendant kit)	TPS[10] (tamper proof screws)
			HO			SVLSPK[6](swivel single pendant kit)	TPB (tamper proof under driver bit)
						SVLDPK[6](swivel double pendant kit)	NODL[11] (integrated node - LOGICA)
						DPK[6](double pendant kit)	IOSL[12] (external occupancy sensor - LOGICA)
						CH[6](chain hang kit)	EOSL[12](external occupancy sensor - LOGICA)
						TM[6](trunnion mount)	IOS[12] (external occupancy sensor)
						PM (pivot mount)	IOSB[13] (external bluetooth occ. sensor)
						JM[7] (junction mount)	EOS (external occupancy sensor)
						MMJ[8] (magnet mount)	SP (surge protection - 10KA)
						QMP(quick mount bracket)	B[14] (black housing)
							W[15] (white housing)
							D (drill)
							FA[16](fully assembled)

NOTE 1: HK – Retro Fit Kit, Mounting options do not apply to BS100LED-HK unit.
NOTE 2: Title 20 emergency pack: 120/277V, BPT: 1098, 1107 lumens; 4FT: 1098, 1135 lumens.
NOTE 3: VLO available for 4ft only.
NOTE 4: Surface mount is standard.
NOTE 5: Specify length for AC/EM", 2'", 3'", 4'", 5'", 6'", 8'" fully adjustable.
NOTE 6: DPK, SPK, CH, TM, & SVLDPK options must specify length.
NOTE 7: JM option – the unit is no longer wet location, but damp location.
NOTE 8: Magnetic mounts must be installed to steel beam measuring minimum 3/16" (4.7mm) thick.
NOTE 9: QMB must be used with JM.
NOTE 10: 18-8 stainless steel screws.
NOTE 11: Logics (Beghelli wireless and powerless control solutions). Contact factory for more details.
NOTE 12: FSP-221–requires wireless IR handheld remote (HHR-FSR9) for changing defaults and testing of occupancy sensor. Order as needed (item #A9781019R). For more details, contact factory.
NOTE 13: Downloadable smart phone app for sensor configuration.
NOTE 14: Does not apply to BS100LED-HK.
NOTE 15: Contact factory.
NOTE 16: Includes latches and grommets installed at the factory. Can be combined with the JM option.

TECHNICAL INFORMATION

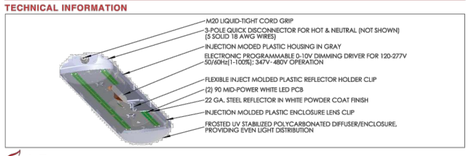

Beghelli reserves the right to change, without notice, specifications or materials that in our opinion will not alter the function or performance of the product. Technical specifications that appear on www.beghelliusa.com supersede all other versions existing in print or electronic form.

TYPE "F5"

LITHONIA LIGHTING®

Catalog Number
Notes
Type

Low-Profile Curved-Basket LED Wraparound

LBL4

4' LENGTH, NARROW HOUSING

LED



Buy American

eldoLED

FEATURES & SPECIFICATIONS

INTENDED USE — LBL LED wraparound provides a digital lighting platform to deliver general ambient lighting for surface-mount applications. The LED system delivers long life and excellent color to ensure a quality, low-maintenance lighting installation. Ideal for closets, storage rooms, hallways, stairwells and offices.

CONSTRUCTION — Metal parts are die formed from pre-painted code-gauge steel. Prismatic diffuser is 100% acrylic with sonically welded luminous ends. Continuous side flanges on fixture body provide light trap and continuous diffuser support to prevent accidental opening and simplify maintenance.

OPTICS — Curved prismatic diffuser with linear side prisms and highly transmissive overlap minimizes lamp image and provides high-angle brightness control. Luminous end plates soften appearance for improved aesthetics.

ELECTRICAL — Long-life LEDs, coupled with high-efficiency drivers, provide superior quantity and quality of illumination for extended service life. 90% L80 lumen maintenance at 50,000 hours (L90/50,000). The LEDs have a CRI of 82.

eldoLED driver options deliver choice of dimming range and choices for control, while assuring flicker-free, low-current inrush, 89% efficiency and low EMI.

Step-level dimming option allows system to be switched to 50% power for compliance with common energy code s while maintaining fixture appearance.

CONTROLS — Pair the LBL with the fixture mount Sensor Switch LSXR sensor for additional energy savings when the space is unoccupied. The LSXR0E sensor dims the fixture down to a low-level setting when there is no occupancy. This option is ideal for stairwells, back rooms, and closets due to the low occupancy level in these spaces.

Optional nLight® embedded controls continuously monitor system performance, allow for constant lumen management / compensation function, facilitate simple "plug-and-play" network and controls upgrading via Cat-5 cable. Ballast disconnect provided where required to comply with US and Canadian codes.

LISTINGS — CSA certified to meet U.S. and Canadian standards. Damp listed.

DesignLights Consortium® (DLC) Premium qualified product and DLC qualified product. Not all versions of this product may be DLC Premium qualified or DLC qualified. Please check the DLC Qualified Products List at www.designlights.org/QPL to confirm which versions are qualified.

BUY AMERICAN — Product with the BAA option is assembled in the USA and meets the Buy America(n) government procurement requirements under FAR, DFARS and DOT. Please refer to www.acuitybrands.com/buy-american for additional information.

WARRANTY — 5-year limited warranty. Complete warranty terms located at: www.acuitybrands.com/support/warranty/terms-and-conditions

Note: Actual performance may differ as a result of end-user environment and application.

All values are design or typical values, measured under laboratory conditions at 25 °C.

Specifications subject to change without notice.

Capable Luminaire

This item is an A+ capable luminaire, which has been designed and tested to provide consistent color appearance and out-of-the-box control compatibility with simple commissioning.

- All configurations of this luminaire meet the Acuity Brands' specification for chromatic consistency
- This luminaire is part of an A+ Certified solution for nLight® control networks when ordered with drivers marked by a shaded background*
- This luminaire is part of an A+ Certified solution for nLight control networks, providing advanced control functionality at the luminaire level, when selection includes driver and control options marked by a shaded background*

To learn more about A+, visit www.acuitybrands.com/aplus.

*See ordering tree for details

TYPE "F3A"

ENVIRONMENTALLY FRIENDLY, ENERGY EFFICIENT

- Lumen packages suitable for ceiling heights ranging from 8' to in excess of 100'
- Efficacies up to 124 lm/w
- Superior-quality white LED light output using Chip on Board technology
- Patented Hyperbolic Reflector (U.S. Patent No. 10,670,227 B2)

PRODUCT SPECIFICATIONS

Atrius™ - Ready Product: Select models of the Lunetas product line deliver valuable data and connectivity to the Atrius IoT location based platform services. For more information, please refer to www.acuitybrands.com/Atrius.

OPTICS

Hyperbolic: Patented hyperbolic shape (U.S. Patent No. 10,670,227 B2) optimized for small, directional LED source, maximizes fixture efficacy while creating the "Silent Ceiling" appearance by reducing lamp image and aperture brightness • Geometry of hyperbolic reflector provides narrow aperture appearance and smoother light distribution

Parabolic/Specular: Computer-optimized parabolic reflector with frosted conveyed lens regressed into aperture provides uniform distribution with no striations

Wall Wash: Available in Hyperbolic and Parabolic. Both providing uniform distributions with no striations

Baffle: White or black painted deep multigroove aluminum baffle insert with integral white painted flange and frosted conveyed glass lens

ELECTRICAL

LED Light Engine: Compact light source delivers uniform illumination without pixilation, enabling excellent beam control • 2SDCM (5000K within 3SDCM) • 80, 90 & 97 CRI

• Replaceable light engine with push in wire connections mounts directly to heat sink and is easily replaceable

Passive Cooling: Aluminum heat sink integrated directly with housing provides superior thermal management to ensure the long life of LED

LED Drivers: Power factor >0.9 • Easily replaceable from above or below the ceiling

Dimming: Dimmable via 0-10V protocol standard • Optional drivers available for use with eldoLED, Lutron EcoSystem, 2-wire dimmers, DMX, or DALI • For a list of compatible dimmers, see LED-DIM.

Life: Rated for 60,000 hours at 70% lumen maintenance • Available with optional Lumen Depreciation Indicator, LDI option B.I.5. Patent No. 9,119,269)

Emergency Battery Pack (Optional) output: Provides a minimum of 600 (BR & BR20C), or 1000 (FBR) lumens for a minimum duration of 90 minutes • BR720C option is CEC Title 20 compliant

Buy American: This product is assembled in the USA and meets the Buy America(n) government procurement requirements under FAR, DFARS and DOT. Please refer to www.acuitybrands.com/buy-american for additional information.

Warranty: 5 years when used in accordance with manufacturing guidelines.
Specifications subject to change without notice.



NEW CONSTRUCTION

REMODEL

A+ Capable options indicated by this shaded background

Design2Ship Quick Ship Programs: Options in green text qualify for Design2Ship —3 business days from order entry to ship. Refer to Design2Ship Program for complete program details. Maximum Order Quantities 99 units.

ORDERING INFORMATION

Complete Catalog# Example: Includes (Rough-in, optics, reflector, accessory) Ordering Example: LG ORBM 35K MVOLT GM BOCW ZT LD1 HW CS PF HBTL

ROUGH-IN

Series	Light Engine	Color Temperature	Voltage	Generation	CRI	Driver	Rough-In Options
LG 6" LGorbo New Construction Downlight LBRMK* 6" LGorbo Remodel Roughin	08LM 57K 3700K 13LM 30K 3000K 18LM 30K 3500K 27LM 40K 4000K 35LM 50K 5000K 38LM 39LM 40LM 48LM 50LM 55LM 60LM 65LM 70LM 75LM 80LM 85LM 90LM	150 277 347 MVOLT (120-277)	GM	80CRI 90CRI 97CRI*	DALI DALI Control Dimming DMX/RDM Driver EDA2[DV] eldoLED SOLOdrive DALI, Logarithmic dimming to 1% min. EDXD[DV] eldoLED SOLOdrive DMX/RDM w/ Phoenix Connectors. Dimming to <1%. EZ10[DV] eldoLED 0-10V SOLOdrive, Linear dimming to 10% min. EZ1[DV] eldoLED 0-10V ECOdrive, Linear dimming to 1% min. EZ0[DV] eldoLED 0-10V SOLOdrive, Logarithmic dimming to <1% FD[DV] Forward or Reverse Phase Dimming Driver FDV[DV] Forward Phase Dimming Driver, 0-10V Driver RCCD[DV] Lutron Ecosystem 2-Wire Dimming Driver ZT 0-10V Dimming to 1% min GE3[DV] 0-10V Dimming to 1% min	IP[DV] Fuse and Fuse Holder CP[DV] Chicago Plenum SER Lumen Depreciation Indicator EM[DV] 600 Lumen Emergency Battery Pack w/Remote Test Switch EMTB2[DV] 600 Lumen Emergency Battery Pack, Self-Diagnostics, CEC Title 20 Compliant EMR3[DV] 1000 Lumen Emergency Battery Pack w/Remote Test Switch NLC[DV] nLight® Dimming Pack Controls NLCE[DV] nLight® dimming pack controls, with occupancy sensor NLTAIR2[DV] nLight® AIR Dimming Pack Wireless Controls NLTAIRE2[DV] nLight® AIR Dimming Pack Wireless Controls, Occupancy Sensor AEBDG[DV] Atrius™ - Bendy, WiC Communicating, Radio (BT Positioning)

AcuityBrands. 1300 S. Wolf Road • Des Plaines, IL 60018 • Phone (847) 827-9880 • Fax (847) 827-9922 • Visit us at www.acuitybrands.com/indy

Printed in U.S.A. ©2017-2021 Acuity Brands Lighting, Inc. Rev. 04/26/21

LITHONIA LIGHTING®

TYPE "F2"

Catalog Number
Notes
Type

GTL Series

2GTL

2' x 4' LED Recessed Troffer



Buy American

FEATURES & SPECIFICATIONS

INTENDED USE — The 2GTL LED recessed troffer offers a wide range of lumen packages, color temperatures, and lens options to meet the lighting needs for a wide range of applications such as schools, offices, and hospitals. The light engine delivers long life and excellent color to ensure a sound quality, low-maintenance lighting installation. **Certain airborne contaminants can diminish the integrity of acrylic and/or polycarbonate. Click here for Acrylic-Polycarbonate Compatibility table for suitable uses.**

CONSTRUCTION — Housing formed from 22 gauge cold-rolled steel. Smooth hemmed sides and smooth inward formed end flanges for safe handling. Includes integral T-bar clips. Lighter-weight fixture allows for safe, easy installation.

OPTICS — Highly transmissive pattern #12 lens diffuses the light source without compromising output. Pattern # 19 and satin white lens options also available.

ELECTRICAL — Long-life LEDs, coupled with high-efficiency drivers, provide extended service life, 80% LED lumen maintenance at 72,000 hours (L80/72,000).

eldoLED driver options deliver choice of dimming range, and choices for control, while assuring flicker-free, low-current inrush, 89% efficiency and low EMI.

Optional nLight® embedded controls make each luminaire addressable - allowing it to digitally communicate with other nLight enabled controls such as dimmers, switches, occupancy sensors and photocontrols. Simply connect all

LIGHTING FIXTURE CUT SHEETS
(FOR REFERENCE ONLY)

HYDREL

CATALOG NUMBER: TYPE "S2"

NOTES

TYPE

ASPEN LED
12V/120V LED



Specifications

Weight:	1.6 lbs.

H:	5.85" (149mm) w/C1
	6.79" (172mm) w/C2
	8.65" (220mm) w/C3

HIGHLIGHTS
- Accent lights are suitable for a variety of mounting applications including ground, wall, tree, sign and architectural accents
- Suitable for wet locations
- Integral driver for 120V
- Dimmable using standard Triac dimmer for 120V and dimmable using standard MLV dimmer and magnetic transformer for 12V
- Tapered-sure lock
- Available in 80CRI and 90CRI
- 1,100lm

LED · 5 YEAR warranty · 66 IP RATED · WET LOCATION · Buy American

DIMENSIONS

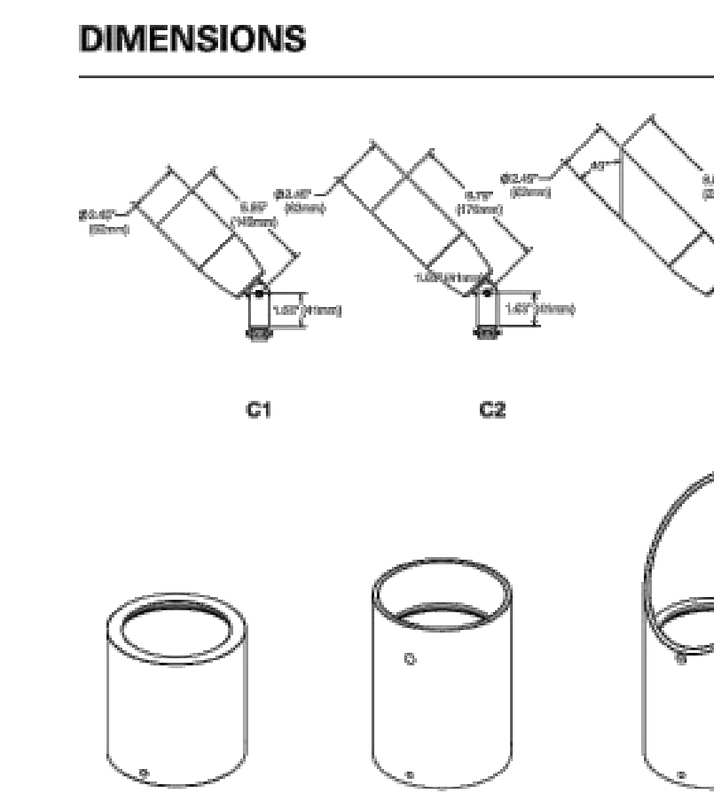

LUMEN PACKAGES

	15DEG	20DEG	25DEG	30DEG	35DEG	40DEG	45DEG	50DEG	55DEG
Delivered Lumens	685	623	659	642	674	656	634	639	641
Watts	11	11	11	11	11	11	11	11	11
LPW	62	57	60	58	61	60	58	58	58
Peak Candela	5,056	2,725	2,827	1830	1569	1212	982	742	664

Note: Information based on 4000K @ P1, 80CRI, 120 Volt with C1 cap and FLC lens

STANDARD DISTRIBUTION

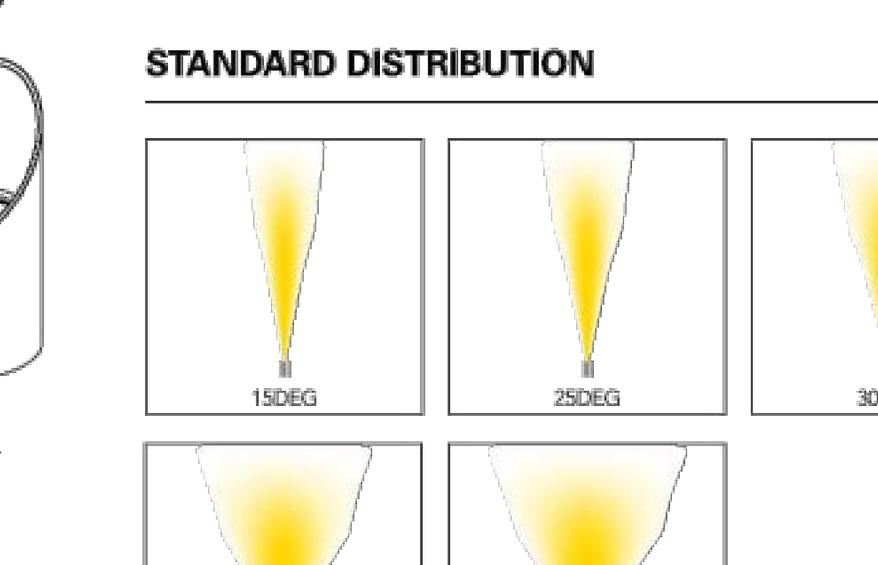

AIMING DETAILS



© 2014-2021 Acuity Brands Lighting, Inc. • One Lithonia Way, Conyers GA 30012
Phone: 800-705-SERV (7378) • www.hydrel.com

TYPE "S1"



WDGE2 LED
Architectural Wall Sconce

Catalog Number

Notes

Type

Hit the Tab key or mouse over the page to see all interactive elements.

Specifications

Depth:	7"
Height:	9"
Width:	11.5"
Weight: (without options)	13.5 lbs

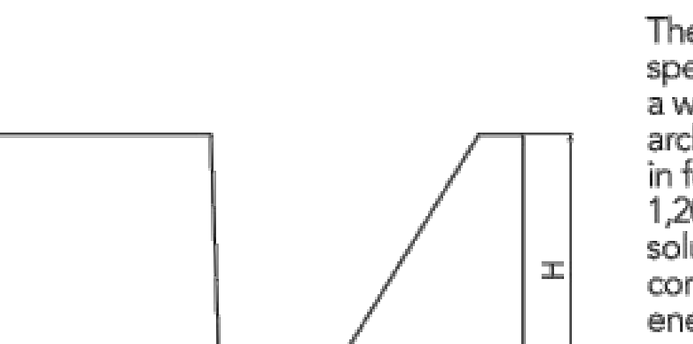

Introduction
The WDGE LED family is designed to meet specifier's every wall-mounted lighting need in a widely accepted shape that blends with any architecture. The clean rectilinear design comes in four sizes with lumen packages ranging from 1,200 to 25,000 lumens, providing a true site-wide solution. Embedded with nLight® AIR wireless controls, the WDGE family provides additional energy savings and code compliance.

WDGE2 delivers up to 6,000 lumens with a soft, non-pixelated light source, creating a visually comfortable environment. When combined with multiple integrated emergency battery backup options, including an 18W cold temperature option, the WDGE2 becomes the ideal wall-mounted lighting solution for pedestrian scale applications in any environment.

WDGE LED Family Overview

Luminaire	Standard EM, 0°C	Cold EM, -20°C	Sensor	Lumens (4000K) P1	P2	P3	P4	P5	P6
WDGE1 LED	4W	--	--	1,200	2,000	--	--	--	--
WDGE2 LED	10W	18W	Standalone / nLight	1,200	2,000	3,000	4,500	6,000	--
WDGE3 LED	15W	18W	Standalone / nLight	7,500	8,500	10,000	12,000	--	--
WDGE4 LED	--	--	Standalone / nLight	12,000	16,000	18,000	20,000	22,000	25,000

Ordering Information

EXAMPLE: WDGE2 LED P3 40K 80CRI VF MVOLT DDBXD

Series	Package	Color Temperature	CRI	Distribution	Voltage	Mounting
WDGE2 LED	P1[1] P1SW P2[1] P2SW P3[1] P3SW P4[1] P5[1] Door with small window (SW) is required to accommodate sensors. See page 2 for more details.	27K 2700K 30K 3000K 35K 3500K 40K 4000K 50K[2] 5000K	80CRI 90CRI	VF Visual comfort forward throw VW Visual comfort wide	MVOLT 347[3] 480[3]	Shipped included: SRM Surface mounting bracket Shipped separately: AWS 3/8inch Architectural wall spacer; BBW Surface-mounted back box; PBBW Premium surface-mounted back box (top, left, right conduit entry)

Options		Finish	
E4WH	Emergency battery backup, CEC compliant (4W, 0°C min)	DDBXD	Dark bronze
E10WH	Emergency battery backup, CEC compliant (10W, 5°C min)	DBLXD	Black
E20WC	Emergency battery backup, CEC compliant (18W, -20°C min)	DNAXD	Natural aluminum
PE[4]	Photocell, Button Type	DWHXD	White
DS[5]	Dual switching (comes with 2 drivers and 2 light engines; see page 3 for details)	DSSXD	Sandstone
DMG[6]	0-10V dimming wires pulled outside fixture (for use with an external control, ordered separately)	DDBTXD	Textured dark bronze
BCE	Bottom conduit entry for premium back box (PBBW). Total of 4 entry points.	DBLBXD	Textured black
		DNATXD	Textured natural aluminum
		DWHGXD	Textured white
		DSSTXD	Textured sandstone

Standalone Sensors/Controls (only available with P1SW, P2SW & P3SW)

PIR	Bi-level (100/35%) motion sensor for 8-15' mounting heights. Intended for use on switched circuits with external dusk to dawn switching.
PIRH	Bi-level (100/35%) motion sensor for 15-30' mounting heights. Intended for use on switched circuits with external dusk to dawn switching
PIR1FC3V	Bi-level (100/35%) motion sensor for 8-15' mounting heights with photocell pre-programmed for dusk to dawn operation.
PIRH1FC3V	Bi-level (100/35%) motion sensor for 15-30' mounting heights with photocell pre-programmed for dusk to dawn operation.

Networked Sensors/Controls (only available with P1SW, P2SW & P3SW)

NLTAIR2 PIR	nLightAIR Wireless enabled bi-level motion/ambient sensor for 8-15' mounting heights.
NLTAIR2 PIRH	nLightAIR Wireless enabled bi-level motion/ambient sensor for 15-30' mounting heights.

See page 4 for out of box functionality

LITHONIA LIGHTING · COMMERCIAL OUTDOOR

One Lithonia Way • Conyers, Georgia 30012 • Phone: 1-800-705-SERV (7378) • www.lithonia.com
© 2019-2020 Acuity Brands Lighting, Inc. All rights reserved.

TYPE "X1" / "X2"

LITHONIA LIGHTING®

Catalog Number

Notes

Type

Signature® Die-Cast Aluminum Exits

LE and LRE



TITLE 20 † · LED · Buy American

FEATURES & SPECIFICATIONS
INTENDED USE — Ideal for applications requiring attractive die-cast aluminum signage, superior illumination and low energy consumption.

CONSTRUCTION — Precision-molded, die-cast aluminum construction — ultra-slim, compact housing. Fine-grain brushed aluminum faceplate with matte black electrostatic polymeric trim. Clear lacquer finish on brushed face inhibits fingerprints and other surface contaminants.

All electronics located inside housing.

Fully overlapping light seal prevents light leaks. Universal directional chevron knockouts are completely concealed and easily removed. Hinged faceplate and spring latches for easy lamp compartment access, no exposed hardware.

Letters 6" high with 3/4" stroke, with 100 ft viewing distance rating, based upon UL924 standards.

U.S. Patent No. 5,739,639, 5,954,423 and 6,502,044. Canada Patent No. 2,204,218. Other patents pending.

OPTICS — Lamp is constructed using new LED technology. Provides perfectly uniform illumination to meet 3/4" letter stroke required by code.

The typical life of the exit LED lamp is 10 years, based on continuous operation. Unique LED lamp platform accommodates both single-face and double-face exits.

Low energy consumption — red exit consumes std .81W, 1.3W (120V), green exit consumes std is 1W, 1.5W (120V). Universal input voltage capabilities (120V through 277V, 50 or 60 HZ).

ELECTRICAL — Solid-state electronic elements to eliminate risk of electromechanical failures.

Surge protection meets ANSI/IEEE C62.41 category B and IEC 1000 immunity standards for high voltage surges, electrostatic discharges, high frequency electrical fast transients and line voltage dips/swells.

Emergency Operation (for EL N option only): Battery: Sealed, maintenance-free nickel-cadmium battery delivers 90 minutes capacity to lamp.

Self-diagnostics (SD option only): Two-state constant-current charger maximizes battery life and automatically recharges after battery discharge. Test switch provided for manual testing.

Self-diagnostic testing for five minutes every 30 days, 30 minutes at 180-day interval, and 90 minutes annually.

Diagnostic evaluation of LED light source, AC to DC transfer, charging and battery condition.

Continuously monitors AC functionality.

Low voltage disconnect prevents excessive deep discharge that can permanently damage the battery.

Single-point microcomputer control for all electronic features.

Crystal oscillator timing system with watchdog protection for precision accuracy.

AC/LVD reset allows battery connection before AC power is applied and prevents battery damage from deep discharge.

Brownout protection is automatically switched to emergency mode when supply voltage drops below 80% of nominal.

Single multi-chromatic LED indicator to display two-state charging, test activation and three-state diagnostic status.

Test switch provides manual activation of 30-second diagnostic testing for on-demand visual inspection.

INSTALLATION — Universal mounting (top, end or back). Double face available with top or end mounting only. LRE: Trim ring has 3/4" depth adjustment to ensure a flush fit against the surface. Protrudes 1/10" from the surface. No exposed hardware.

Die-cast aluminum canopy provided for surface mount only.

LISTINGS — UL damp location listed 50°F - 104°F (10°C - 40°C). Meets UL 924, NFPA 101 (current Life Safety Code), NEC and OSHA illumination standards. North Carolina Department of Insurance.

BUY AMERICAN — Product with the BAA option is assembled in the USA and meets the Buy America(n) government procurement requirements under FAR, DFARS and DOT.

Please refer to www.acuitybrands.com/buy-american for additional information.

WARRANTY — 5-year limited warranty. (Battery is prorated.) Complete warranty terms located at: www.acuitybrands.com/support/warranty/terms-and-conditions

Note: Actual performance may differ as a result of end-user environment and application.
All values are design or typical values, measured under laboratory conditions at 25 °C.
Specifications subject to change without notice.

† Small Battery Chargers Certified in the CA Title 20 Appliance Efficiency Database.

ORDERING INFORMATION — For shortest lead times, configure products using **bolded options**.

Example: LE S 1 R EL N SD

Series	Face type	Housing color	Number of faces	Letter color	Input voltage	Operation	Options
LE LED, surface mount LRE LED, recessed	S Stencil P Panel[1]	(blank) Matte black, brushed aluminum face BZ Dark bronze W White B Matte black	1 Single face 2 Double face[2]	R Red G Green	(blank) Universal input voltage (120-277V, 50 or 60 HZ)	(blank) AC only EL N Nickel-cadmium battery back-up X2 Lamp wired on two separate AC circuits[3]	(blank) None TP Two tamper proof Torx-head screws VR Vandal-resistant shield (1/8" thick polycarbonate)[4] FIFA Field selectable fire alarm interface or flashing emergency operation with intermittent audible alarm (one flash per minute)[5] FI Fire alarm flashing interface[6] FA Flashing emergency operation and intermittent audible alarm[7] SD Self-diagnostics[7] BAA BAA Buy America(n) Act Compliant[8]

Accessories: *Order as separate catalog number.*

ELA US12	12" stem kit (see spec sheet ELA-StemKits)[2,9]
ELA WG1	Back-mount wire guard (see spec sheet ELA-WG)[2]
ELA WGEXT	Top-mount wire guard (see spec sheet ELA-WG)[2]
ELA WGEXE	End-mount wire guard (see spec sheet ELA-WG)[2]
ELA ERK	Recess mounting rough-in kit for LRE only (see spec sheet ELA-ERK)

Notes
1. Panel face available for special wording only (see Custom Signage spec sheet).
2. Not available with LRE models.
3. UL Listed as emergency lighting.
4. VR contains tamper proof screws.
5. Available with SD option only.
6. Available with AC only or EL N operation only.
7. Available with EL N option only.
8. BAA only available for LE.
9. Add W for white.

TYPE "F8"

Cylindro II chandeliers (BG67)
circular LED pendants with white acrylic diffuser

delray.

CONSTRUCTION
- Extruded aluminum outer housing, with frosted white acrylic diffuser.
- 6 ft. gray adjustable power cord and aircraft cables, gripper supplied, standard. Specify **XP** for additional length. Default finish/power cord pairings are silver/gray, white/white, black/black.
- For differing fixture/canopy colors, please consult factory.
- Drivers and DMX module installed in surface mount canopy. For remote driver installation, see page 2.
- Drivers are universal voltage, 120–277V.
- Specify: **S**, **C**–standard canopy (10" x 2.25"), which mounts to all standard J-boxes and must attach to structure able to support 75 lb. **SR**, **CR**, **NCR**–remote canopy (3" x 0.45") mounts to 3" mud ring.
- cUL listed for dry and damp locations only.

TYPE:	PROJECT:
ORDER NUMBER:	

MODEL#	DIAMETERS	FINISH	OUTPUT	LEDS	MOUNT STYLE	DRIVER	OPTION
BG67	3–3 ft. 4–4 ft. 5–5 ft.	S–Silver W–White K–Black (see page 3 for more)	LO–Low HO–High	W30 W35 W40 RGBW–color + 3500° K white	S–Separate SR–Separate Remote C–Central CR–Central Remote NCR–Nexus CR	D–Standard BDIM-W11 DMX DA–DALI	EM
Example:							
BG67	345	S	HO	W35	SR	D	

BDMXCON-W–white faceplate (enter quantity):		XL–custom lumen reduction (specify lumens):	
BDMXCON-B–black faceplate (enter quantity):		XP–Extra power cord (in inches, 25 ft. max.)	
		EB–Earthquake Bracing Kit (enter quantity):	
		Specify canopy finish (silver, white, black):	
		Specify power cord color (gray, white, black):	

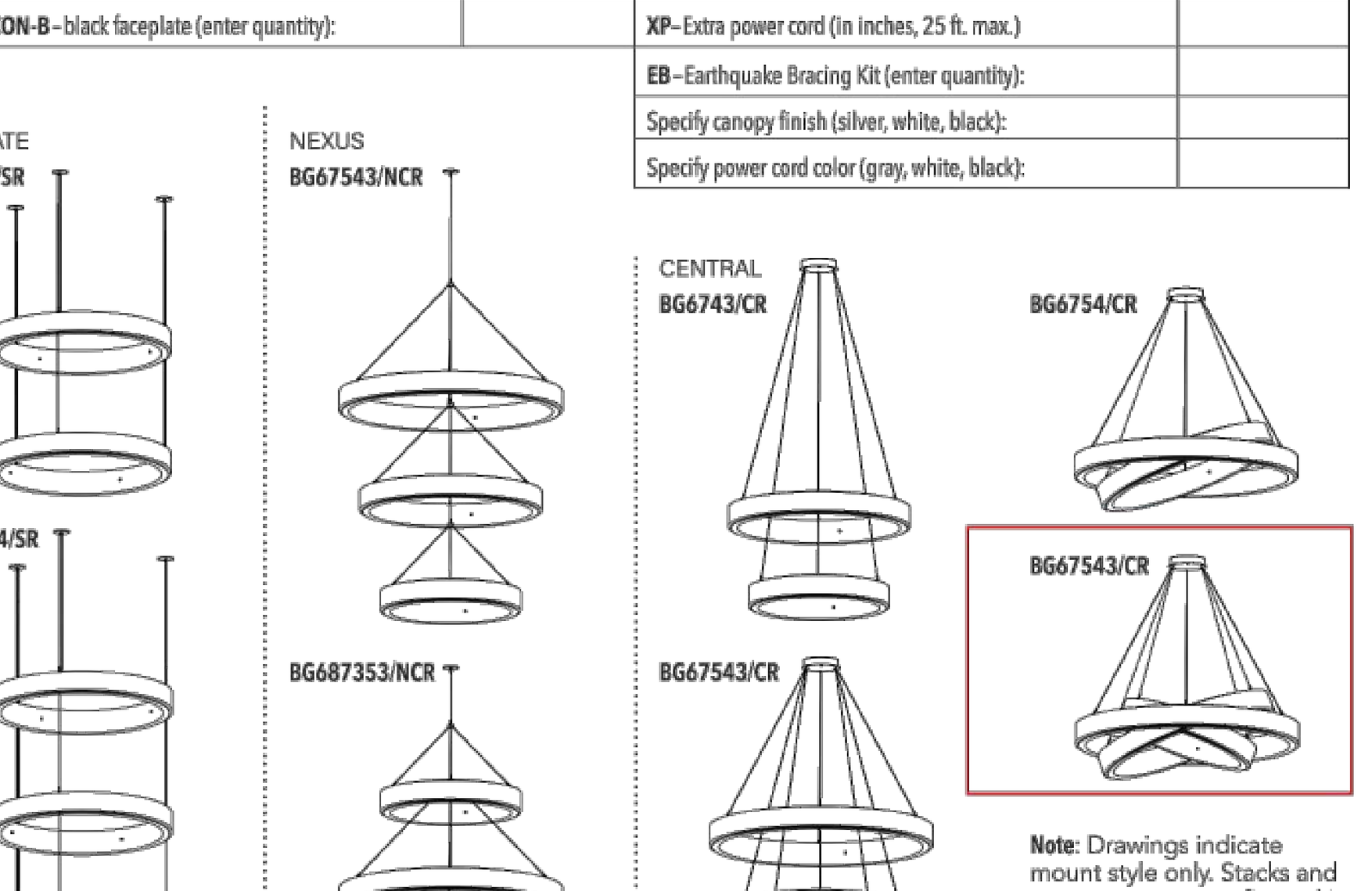

Note: Drawings indicate mount style only. Stacks and gyroscopes are configured in the field by adjusting aircraft and power cable lengths. Stacked fixtures must all be the same diameter.

OCT 2021

delraylighting.com

HYDREL

CATALOG NUMBER: TYPE "S2" Tree Ring

NOTES

TYPE

TRAR
Tree Ring Architectural



Specifications

Miniumum Tree Diamter:	10" (254mm)
Maximunum Tree Diameter:	15" (381mm)
Overall Diameter:	19 1/2" (495mm)
Weight:	22lbs. based on TRAR 6FX

HIGHLIGHTS
- Thoughtful and durable design, available in 2, 3, 4, 5 and 6 fixture configurations
- IP66 rated aluminum junction box
- Stainless Steel fasteners
- Designed for 10"-15" diameter trees. Please consult factory for custom diameters.
- For specified Hydrel landscape and accent fixtures
- Matching tree ring and jbox finish

IP66 · LED · Buy American

DIMENSIONS

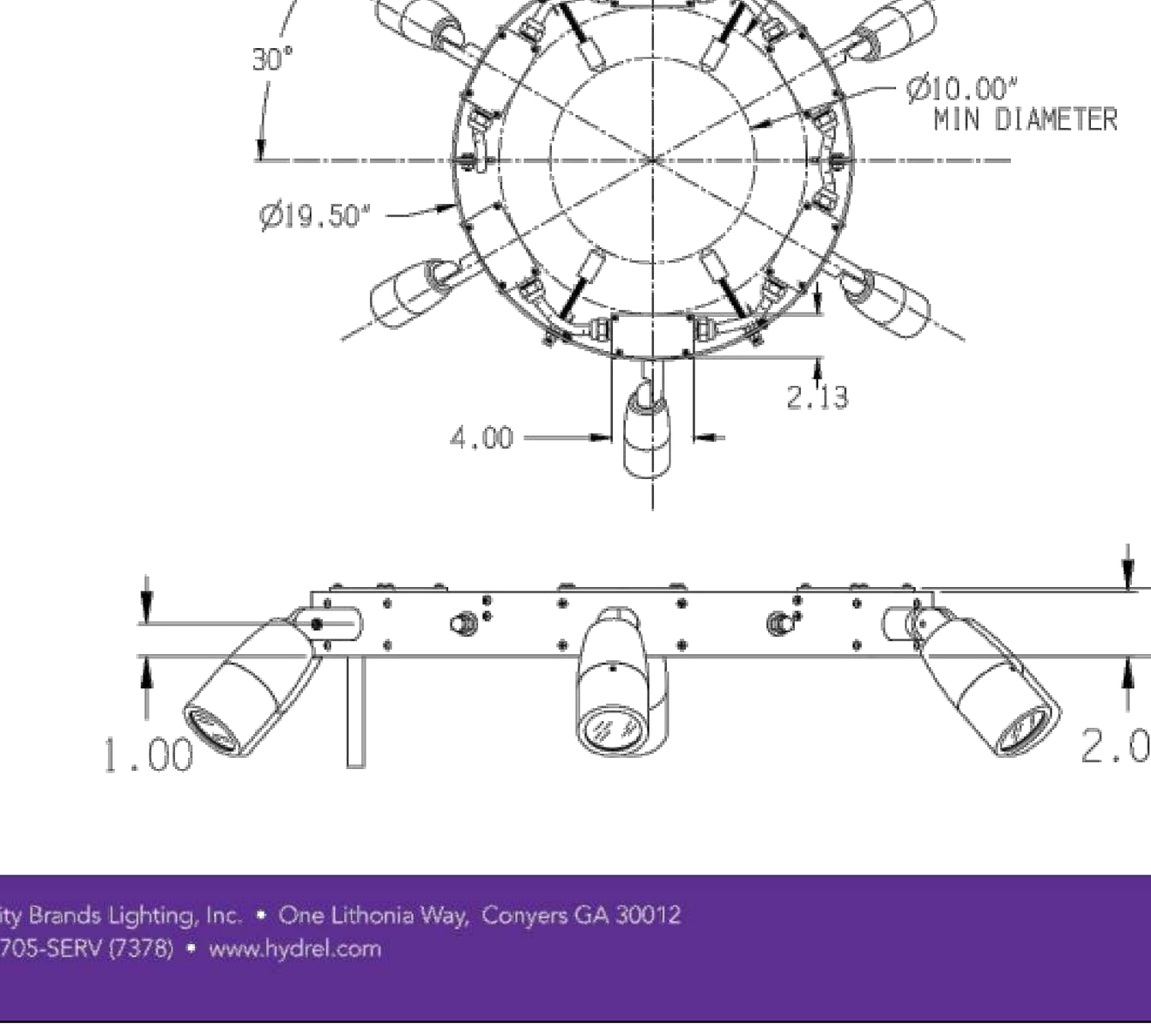

© 2020 Acuity Brands Lighting, Inc. • One Lithonia Way, Conyers GA 30012
Phone: 800-705-SERV (7378) • www.hydrel.com

TYPE "S3"

PRE-2-M LED Specifications

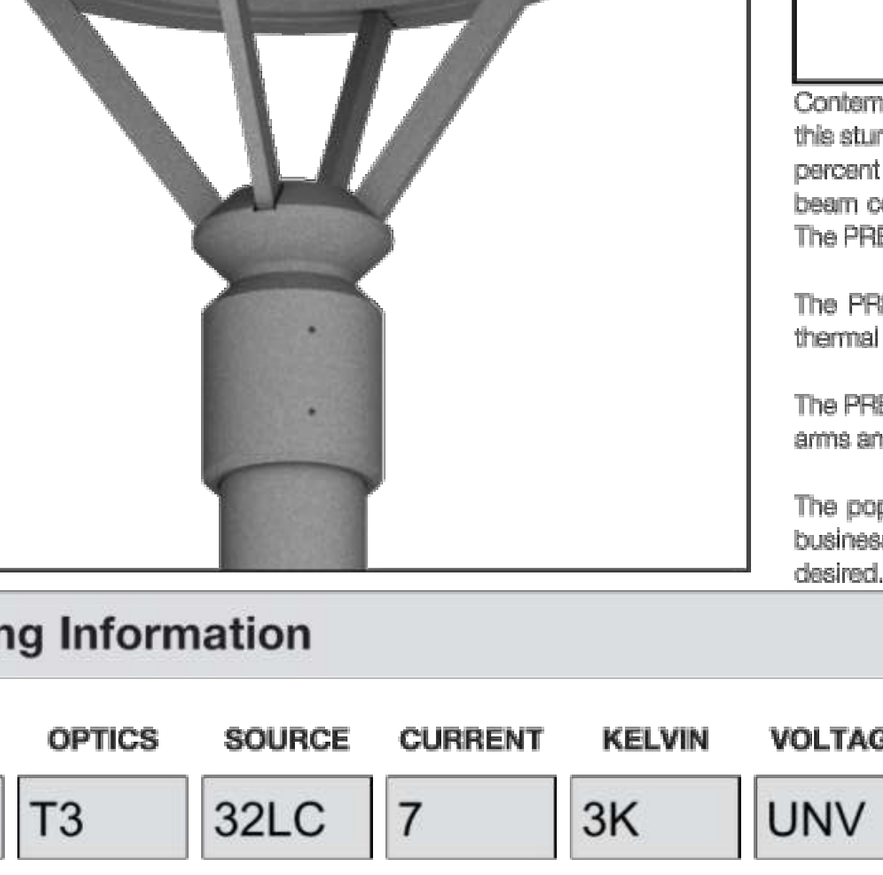

Project Name:

Catalog Number:

Type:

Contemporary design meets the new generation of LED green technology in this stunning lumenaire, the **PRE-2-M**. The PRE-2-M series provides up to fifty percent energy savings over traditional HID light sources; and offers excellent beam control and LED life beyond 100,000 hours for 350 milliamp systems. The PRE-2-M is offered in six optical distributions.

The PRE-2-M's fully-sealed housing features an exceptionally well-designed thermal management system that provides superior heat dissipation.

The PRE-2-M fixture is built with a cast aluminum housing, extruded aluminum arms and a spun aluminum, removable top.

The popular **PRE-2-M** is the perfect compliment to any university campus, business park, or walkway project where contemporary, architectural design is desired.

Ordering Information

MODEL	OPTICS	SOURCE	CURRENT	KELVIN	VOLTAGE	MOUNTING	FINISH	OPTIONS	OPTIONS
PRE-2-M	T3	32LC	7	3K	UNV	PT	BZ		
PRE-2-M	T1 T2 T3 T4 T5 T5W T5WR	16LC 32LC 48LC	3 350mA 5 530mA 7 700mA	3K 3000K 4K 4000K 5K 5000K	UNV 120-277V 8 347V 5 480V	PT Post Top *Slips over 3" OD tenon X 4.5" tall as standard	BZ Bronze BK Black SBK Smooth Black WH White SWH Smooth White GP Graphite GY Grey SL Silver Metallic CC Custom Color	PC-120 PC-208 PC-240 PC-277 Button Type Photocell WSC-8 Motion Sensor 8' Mounting Height WSC-20 Motion Sensor 9-20' Mounting Heigh WSC-40 Motion Sensor 21-40' Mounting Height This option will require (1) FSIR 100 remote for programing	DIM 0-10v Dimming Driver VWC Visionaire Wireless Controls *Consult Factory IR-(R, B, G Illuminated Rings (Red, Blue, Green) PER 3, 5, or 7 Pin Photo Receptacle w/shorting cap

VISIONAIRE LIGHTING

A

TYPE "X1W" / "X2W"

LITHONIA LIGHTING®

Catalog Number

Notes

Type

Wet Location Exit Sign

WLTE

LED

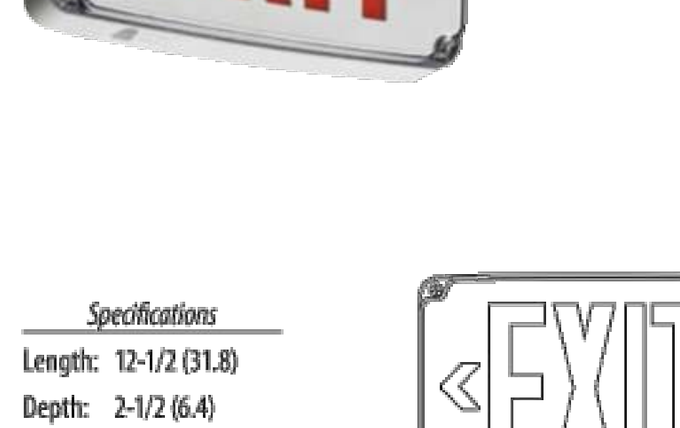

FEATURES & SPECIFICATIONS
INTENDED USE — Ideal for wet location areas requiring exit signs for AC only or battery back-up power that are subject to saturation with non-mechanically delivered water.

CONSTRUCTION — White, compact, contemporary design. Engineering-grade thermoplastic housing is impact-resistant, scratch-resistant and corrosion-proof. Universal directional Chevron inserts are easily removed and reinserted. UL94V-0 flame rating. UV-stable resin resists discoloration from natural and man-made light sources. Rugged, heavy-duty, polycarbonate clear housing lens. Housing also available in black or gray. Letters 6" high with 3/4" stroke, with 100 ft. viewing distance rating, based upon UL924 standards.

OPTICS — Low energy consumption — fewer than 5 watts. The typical life of the exit LED lamp is 10 years, based on continuous operation.

ELECTRICAL — Dual voltage input capacity (120/277V).

Battery: (EL Option) – Sealed, maintenance free nickel-cadmium battery delivers 90 minutes rated capacity. Test switch provides manual activation of 30-second diagnostic testing for on-demand visual inspection.

Self-diagnostic testing (SD Option Only) for 30 seconds every 30 days, 30 minutes every 180 days and a 90-minute annual test. Diagnostic evaluation of LED light source, charging and battery condition.

INSTALLATION — Universal (top, end or back mount), canopy included. Junction box hole pattern for 4" octagon mounting. Flexible conduit entry.

LISTINGS — UL listed. Wet location listed. Standard cold temperature rating -4°F to 122°F (-20°C to 50°C). Meets UL 924, NFPA 101 (current Life Safety Code) and NFPA 70-NEC

WARRANTY — 5-year limited warranty. (Battery is prorated.) Complete warranty terms located at www.acuitybrands.com/CustomerResources/Terms_and_conditions.aspx

Note: Actual performance may differ as a result of end-user environment and application.
All values are design or typical values, measured under laboratory conditions at 25 °C.
Specifications subject to change without notice.

Specifications
Length: 12-1/2 (31.8)
Depth: 2-1/2 (6.4)
Height: 8-1/8 (20.6)
Weight: 4.1 lbs (1.9 kg)

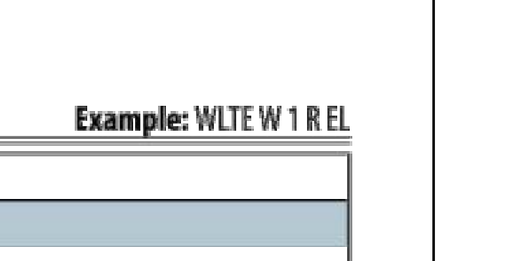

All dimensions are inches (centimeters) unless otherwise indicated.

ORDERING INFORMATION — Lead times will vary depending on options selected. Consult with your sales representative.

Example: WLTE W 1 R EL

Series	Housing color	Number of faces	Letter color	Operation	Options
WLTE	W White B Black GY Gray	1 Single face 2 Double face	R Red G Green	(blank) AC only EL Nickel-cadmium battery	TP Tamper-resistant screw hardware SD Self-diagnostics[1]

Accessories: *Order as separate catalog number.*[2]

ELA WG1	Wireguard (back mount only)

Notes
1. Only available with EL option.
2. See spec sheet ELA-WG.

LITHONIA LIGHTING®

Catalog Number

Notes

Type

Decorative Indoor

Traditional Square Vanity

VANITY LED



ADA · ENERGY STAR
U.S. PATENT PENDING

FEATURES & SPECIFICATIONS
INTENDED USE
Provides an LED lighting platform to deliver general or task lighting for residential and light commercial applications. Light engine delivers long life and excellent color to ensure a quality, low-maintenance light installation. Ideal for use in bathrooms, lavatories, hallways, corridors, stairways, utility areas and more.

CONSTRUCTION
The Traditional Square Vanity is constructed of an acrylic diffuser with housings available in brushed nickel. The white acrylic diffuser provides even illumination and softens the appearance of the LEDs for improved aesthetics.

OPTICS
2' produces 1300 lumens, 3' produces 1900 lumens, and 4' produces 2500 lumens at 3000K with 50,000 hours of life.

Extruded acrylic diffuser is of highly transmissive material to minimize LED image and provides high-angle brightness control.

ELECTRICAL
Long-life LEDs, coupled with a multivolt driver, provide extended service life. Standard input = 9.5 watts, (2'); 26 watts, (3'); 34 watts, (4'). Fixture is rated to deliver L70 performance at 50,000 hours and operates at 120-277 volts.

Use with non-dimmable switches only.

LISTINGS
UL Listed to US and Canadian safety standards. Listed for damp locations. ENERGY STAR® certified.

WARRANTY
5-year limited warranty. Complete warranty terms located at www.acuitybrands.com/CustomerResources/Terms_and_conditions.aspx

NOTE: Actual performance may differ as a result of end-user environment and application.
All values are design or typical values, measured under laboratory conditions at 25 °C.
Specifications subject to change without notice.

SPECIFICATIONS	2FT	3FT	4FT
Length:	23-7/16 (595)	35-1/4 (895)	47-1/16 (1195)
Weight:	7.3 (3.3)	10 (4.5)	12.7 (5.8)
3000K Lumens (LPW)	1302 (72)	1919 (73)	2551 (75)
4000K Lumens (LPW)	1373 (76)	2024 (77)	2689 (79)

All dimensions are inches (millimeters) unless otherwise indicated. Weights are pounds (kilograms).



ORDERING INFORMATION — For shortest lead times, configure product using **bolded options.**

Example: FMVTSL 36IN MVOLT 30K 90CRI BN

Series	Length	Voltage	Color temperature	CRI	Finish
FMVTSL Traditional Square Vanity	24IN 2' Nominal 36IN 3' Nominal 48IN 4' Nominal	MVOLT MVOLT (120V-277V)	30K 3000 K	90CRI >90	BN Brushed Nickel

---

DIGALERT
DIAL TOLL FREE 1-800-422-4133
AT LEAST TWO DAYS BEFORE YOU DIG
UNDERGROUND SERVICE ALERT OF SOUTHERN CALIFORNIA

BASIS OF BEARINGS:
BEARINGS SHOWN HEREON ARE BASED ON THE CENTERLINE OF 162 ND STREET (FORMERLY MARKET STREET) BEING N 89° 55' 30" E SHOWN ON TRACT NO. 10901, M.B. 254/31-32

BENCHMARK:
THE CITY OF GARDENA BENCHMARK NO. 5D-15 ELEV. = 43.508

CONSULTANT:

FBA Engineering
Consulting Electrical Engineers
150 Paularino Avenue Suite A120
Costa Mesa, CA 92626
949.852.9995 • 949.852.1657 (fax)
fbaengr.com
FBA Job Number: 535050

REGISTERED PROFESSIONAL ENGINEER · No. E 10372 · Exp. 09-30-24 · ELECTRICAL · STATE OF CALIFORNIA
05/01/2023

PREPARED UNDER THE SUPERVISION OF:

RJM DESIGN GROUP
31591 Camino Capistrano
San Juan Capistrano, CA 92675
www.RJMdesigngroup.com
[949] 493-2690 fax
[949] 493-2600 phone

LICENSED LANDSCAPE ARCHITECT · LARRY P. RYAN · LICENSE NO. 2502 · Signature · 09/30/2023 Renewal Date · 9/26/2023 Date · STATE OF CALIFORNIA

REVISIONS

NO.	DESCRIPTION	DATE	APPROVED
1	90% CD SUBMITTAL	12/15/2022	
2	100% CD SUBMITTAL	05/01/2023	
3	FINAL SUBMITTAL	10/02/2023	

CITY OF GARDENA
DEPARTMENT OF PUBLIC WORKS - ENGINEERING

LIGHTING FIXTURE CUT SHEETS

COMMUNITY AQUATICS & SENIOR CENTER

E-0.02D

	INITAL	DATE
DESIGNED BY	SR	11/14/2022
DRAWN BY	SR	09/26/2023
CHECKED BY	BZ	09/28/2023

APPROVED BY:

DATE · DIRECTOR OF PUBLIC WORKS

SHT. 147 OF 195 · DWG. NO. 5-2606

FBA Engineering / Plot Date: 9/26/2023 11:05 AM / Plotted by: Steve Roth / Drawing Location: I:\535\050\E-0.02_535050.dwg

FILE PATH: I:\535\050\E-0.02_535050.DWG
PLOT TIME: 9/26/2023 11:05:30 AM

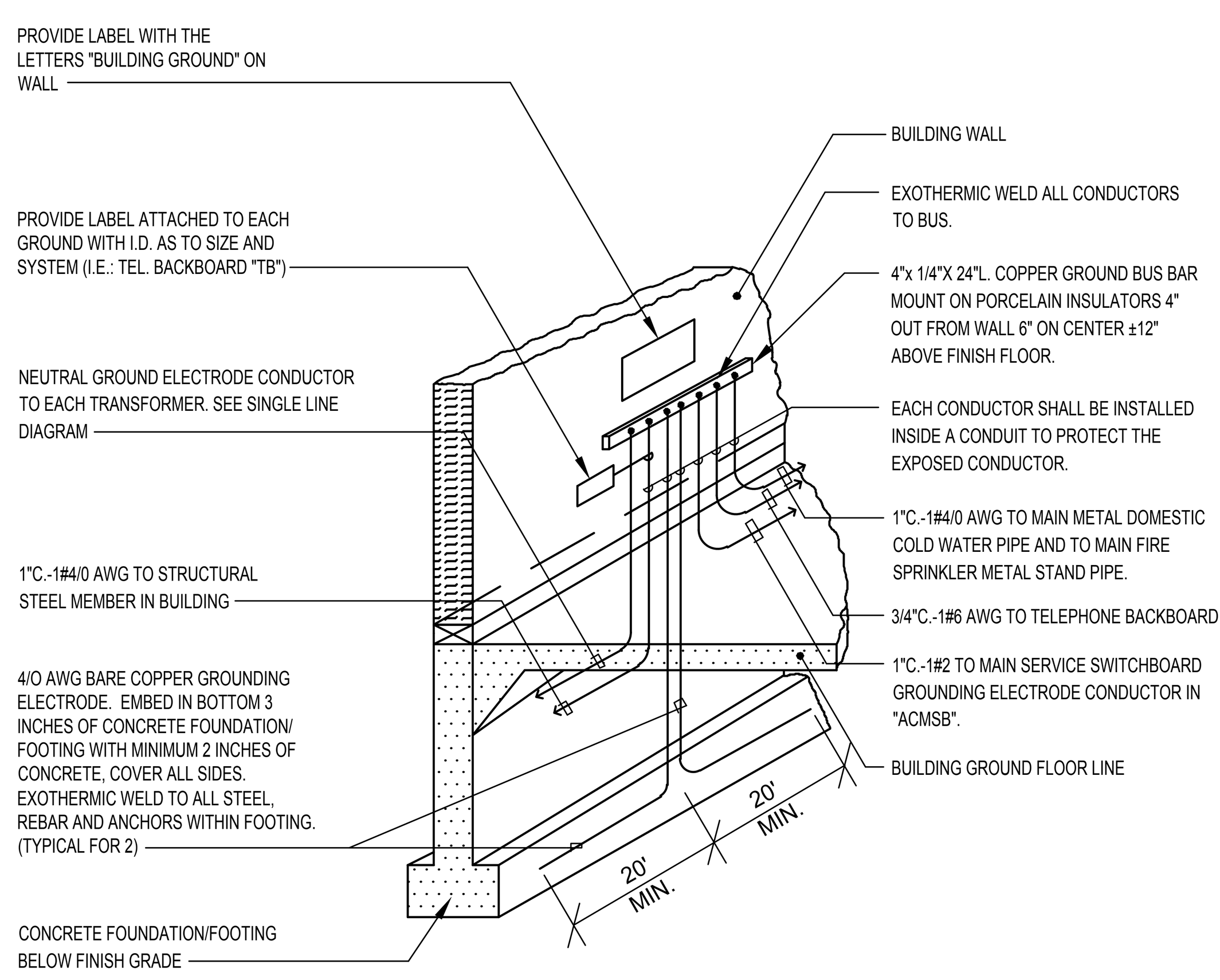

BUILDING ELECTRICAL SERVICE GROUND BUS DETAIL (1)
(UFER GROUND) NOT TO SCALE

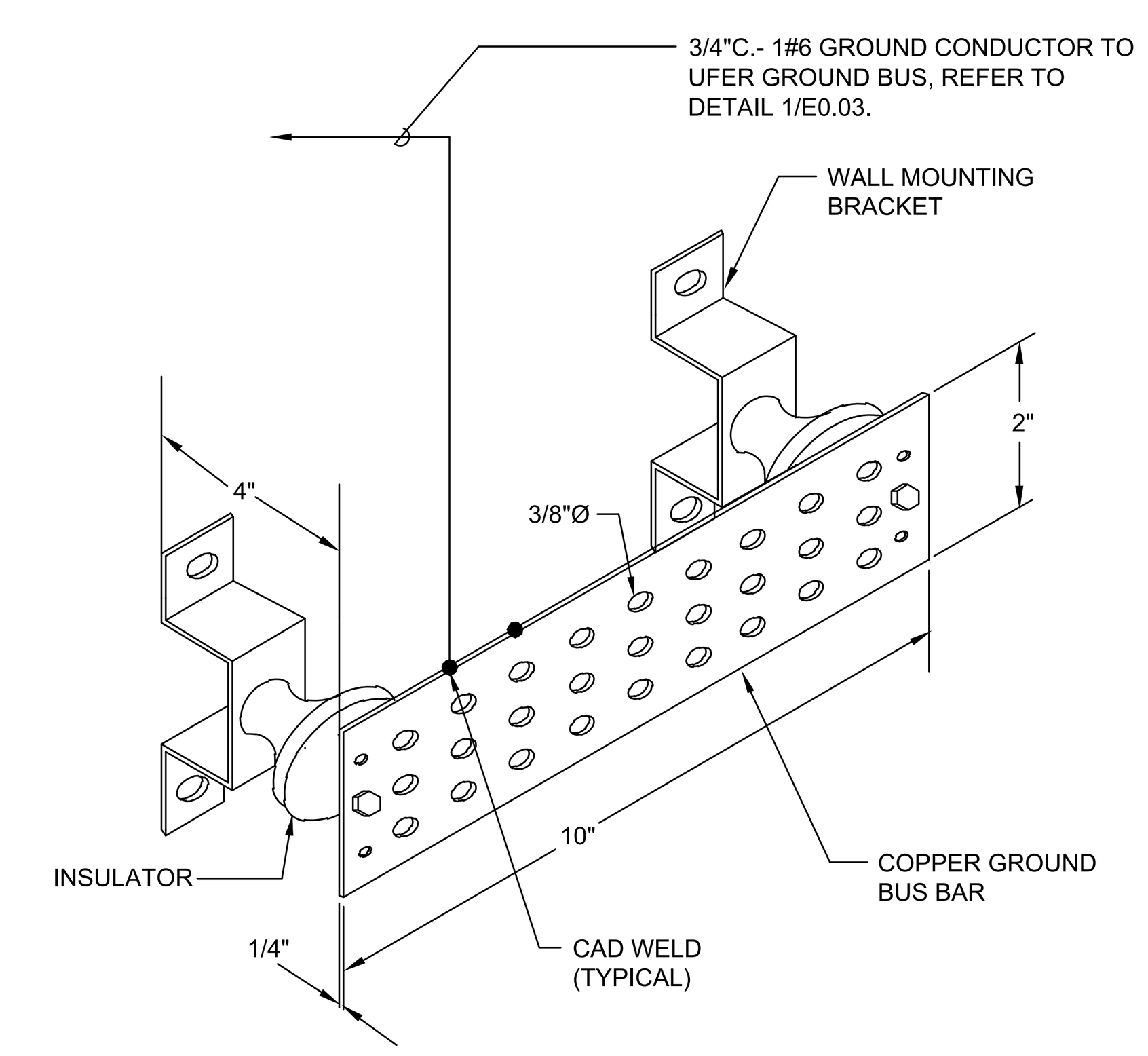

INTERSYSTEM BONDING TERMINATION BUS BAR (2)
SCALE: NONE

NOTE: PROVIDE FIELD MARKING PER NEC 110.24.

SERVICE EQUIPMENT SHALL BE LEGIBLY MARKED IN THE FIELD WITH THE MAXIMUM AVAILABLE FAULT CURRENT. THE FIELD MARKING(S) SHALL INCLUDE THE DATE THE FAULT CURRENT CALCULATION WAS PERFORMED AND BE OF SUFFICIENT DURABILITY TO WITHSTAND THE ENVIRONMENT INVOLVED.

FIELD MARKING EXAMPLE:

WARNING

Maximum available fault current: 30,000 Symmetrical RMS Amperes Date: **//22**

AVAILABLE FAULT CURRENT FIELD MARKING DETAIL (3)
SCALE: NONE

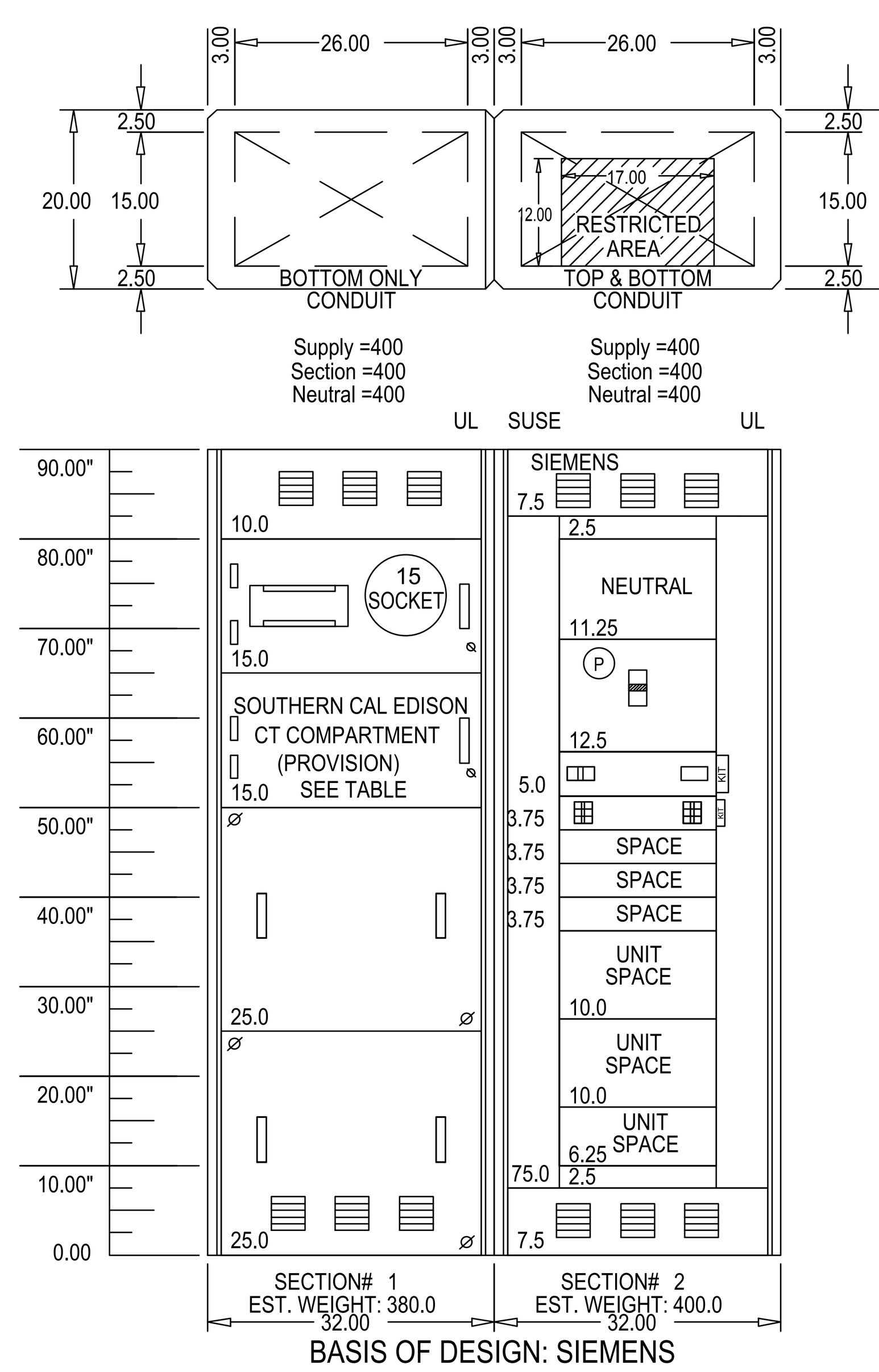

SWITCHBOARD "ACMSB" ELEVATION (4)
SCALE: NONE

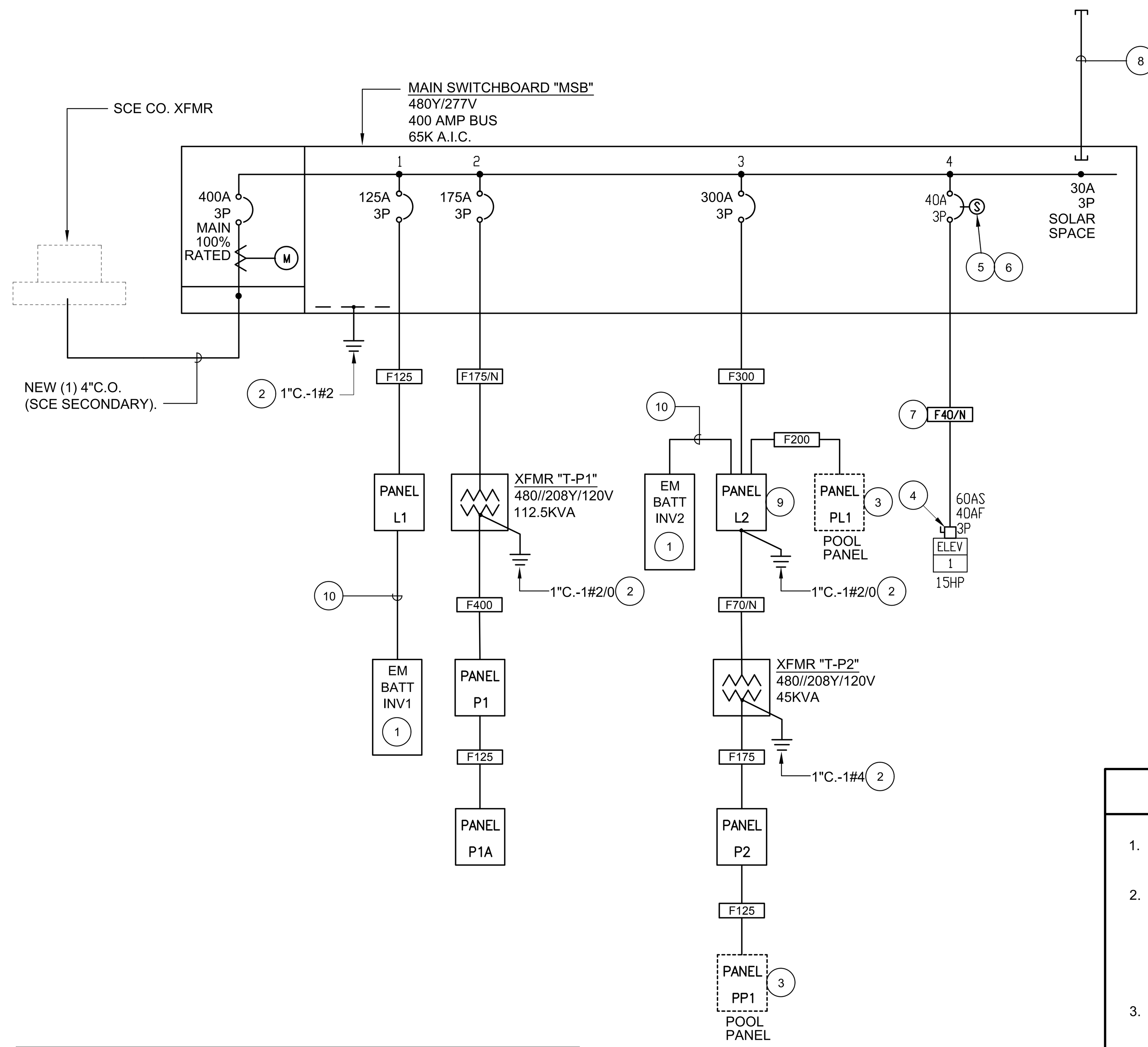

SINGLE LINE DIAGRAM PLAN NOTES:

1. EMERGENCY LIGHTING BATTERY INVERTER SYSTEM. 2.8 KVA, 277V INPUT - 277V OUTPUT. (5) 20 AMP-1 POLE (NORMALLY ON) OUTPUT CIRCUIT BREAKERS. MYERS #4-EM4-S-BDA205-2YW OR APPROVED EQUAL.
2. TO UFER GROUND BUS. SEE DETAIL 1/E0.03.
3. PANEL PROVIDED AND INSTALLED BY POOL EQUIPMENT CONTRACTOR.
4. SWITCH AND FUSE SIZE PER ELEVATOR MANUFACTURERS REQUIREMENTS. PROVIDE NORMALLY OPEN AUXILIARY CONTACT FOR CONNECTION TO ELEVATOR CONTROLLER.
5. CONNECT SHUNT TRIP BREAKER RELAY COIL TO FIRE ALARM SYSTEM.
6. SHUNT TRIP CIRCUIT BREAKER. CIRCUIT BREAKER TO OPEN WHEN ELEVATOR MACHINE ROOM OR ELEVATOR SHAFT HEAT DETECTOR IS ACTIVATED.
7. PROVIDE EQUIPMENT GROUND CONDUCTORS. THE CONDUIT SHALL NOT BE USED AS THE SOLE GROUNDING MEANS.
8. (1) 3/4"C.O. CAP & MARK 12" ABOVE ROOF DECK AND MAKE WEATHERPROOF.
9. PANEL SHALL BE RATED FOR SERVICE ENTRANCE USE.
10. 3/4"C.-2#12, 1#12 GRD.

SINGLE LINE DIAGRAM GENERAL NOTES

1. THE ELECTRICAL DISTRIBUTION EQUIPMENT SHALL BE FULLY RATED FOR 65 K A.I.C., SERIES RATING NOT ALLOWED.
2. PROVIDE SHORT CIRCUIT PROTECTIVE DEVICE COORDINATION AND ARC-FLASH STUDY INCLUDING THE ENGINEERED SETTINGS FOR EACH FUSE AND ADJUSTABLE CIRCUIT BREAKER SHOWING THE CORRECT TIME AND CURRENT SETTINGS TO PROVIDE COORDINATION WITHIN THE LIMITS OF THE SPECIFIED EQUIPMENT. REFER TO ELECTRICAL SPECIFICATIONS FOR ADDITIONAL REQUIREMENTS.
3. THE BASIS OF DESIGN AND DIMENSIONS USED FOR SWITCHBOARDS/METER BANKS ARE BASED UPON SIEMENS MANUFACTURED PRODUCTS. IF ANOTHER MANUFACTURES PRODUCT IS FURNISHED, CONTRACTOR SHALL INSURE THAT THE PRODUCT WILL FIT WITHIN THE SPACE PROVIDED.
4. PROVIDE EQUIPMENT GROUND CONDUCTOR IN ELEVATOR FEEDER. THE CONDUIT SHALL NO BE USED AS THE SOLE GROUNDING MEANS.

UTILITY CO. : SOUTHERN CAL EDISON

DESCRIPTION	PG NO.
CT COMPARTMENT	6-18/EUSERC P320
UGPS	6-14, 6-15/EUSERC P345
LINE TERMINATION	6-12, 6-13/EUSERC P347
METER PLATES	6-24/EUSERC P332

LOAD SUMMARY - "MSB"

ITEM	DESCRIPTION	VA
1	PANEL "L1"	15000
2	XFMR "T-P1"	150000
3	POOL PANEL "PL1"	133000
4	ELEVATOR	17000
5	SPACE	
6		
	TOTAL	315000

379	AMPS @
480	VOLTS
3	PH
4	WIRE
400A	BUS

FEEDER SCHEDULE

COPPER CONDUCTORS THW 600V (AWG)

FEEDER TYPE	CONDUIT SIZE QUANTITY QUAN.	CONDUIT SIZE QUANTITY SIZE	CONDUCTORS IN EACH CONDUIT PHASE/NEUTRAL QUAN.	PHASE/NEUTRAL SIZE	EQUIPMENT GROUND WIRE SIZE
F20	1	3/4"	4	12	12
F30	1	3/4"	4	10	10
F40	1	1"	4	8	10
F50	1	1 1/4"	4	6	10
F60	1	1 1/2"	4	4	10
F70	1	1 1/2"	4	4	8
F80	1	2"	4	2	8
F90	1	2"	4	2	8
F100	1	2"	4	1	8
F110	1	2"	4	1	6
F125	1	2"	4	1/0	6
F150	1	2"	4	1/0	6
F175	1	2"	4	2/0	6
F200	1	2 1/2"	4	3/0	6
F225	1	3"	4	4/0	4
F250	1	3"	4	250MCM	4
F275	1	4"	4	350MCM	4
F300	1	4"	4	350MCM	4
F350	1	4"	4	500MCM	2
F400	2	2 1/2"	4	3/0	2
F500	2	3"	4	250MCM	2
F600	2	4"	4	350MCM	1
F700	2	4"	4	500MCM	1/0
F800	3	4"	4	350MCM	1/0
F900	3	4"	4	350MCM	2/0
F1000	3	4"	4	500MCM	2/0
F1200	4	4"	4	350MCM	3/0
F1600	5	4"	4	500MCM	4/0
F2000	6	4"	4	500MCM	250MCM
F2500	7	4"	4	500MCM	350MCM
F3000	8	4"	4	500MCM	500MCM
F4000	11	4"	4	500MCM	500MCM
F20/N	1	3/4"	3	12	12
F30/N	1	3/4"	3	10	10
F40/N	1	1"	3	8	10
F50/N	1	1"	3	6	10
F60/N	1	1 1/4"	3	4	10
F70/N	1	1 1/4"	3	4	8
F80/N	1	1 1/4"	3	2	8
F90/N	1	1 1/4"	3	2	8
F100/N	1	1 1/2"	3	1	8
F110/N	1	1 1/2"	3	1	6
F125/N	1	2"	3	1/0	6
F150/N	1	2"	3	1/0	6
F175/N	1	2"	3	2/0	6
F200/N	1	2"	3	3/0	6
F225/N	1	2 1/2"	3	4/0	4
F250/N	1	2 1/2"	3	250MCM	4
F275/N	1	3"	3	350MCM	4
F300/N	1	3"	3	350MCM	4
F350/N	1	4"	3	500MCM	2
F400/N	2	2"	3	3/0	2
F450/N	2	2 1/2"	3	4/0	2
F500/N	2	2 1/2"	3	250MCM	2
F600/N	2	3"	3	350MCM	1
F700/N	2	4"	3	500MCM	1/0
F800/N	3	3"	3	350MCM	1/0
F900/N	3	3"	3	350MCM	2/0

SHORT CIRCUIT AND VOLTAGE DROP CALCULATIONS - "MSB"

FEEDERS

DESIGNATION	FEEDER LENGTH (ft)	PHASE φ	CONDUCTORS Cu	CONDUCTORS SIZE	CONDUCTORS PARALLEL RUNS	CONDUIT MAG=1 NON=2	L-L VOLTAGE	L-N VOLTAGE	STARTING Isc	CONNECTED LOAD AMPACITY	BUS AVAILABLE Isc 3 φ	BUS AVAILABLE Isc 1 φ L-N	VOLTAGE DROP %
MSB-1 TO PANEL L1	25	3	Cu	#1/0	1	1	480	277	65,000	80	39,226	N/A	0.10
L1 TO INVERTER INV1	15	1	Cu	#12	1	1		277	39,226	9		5,194	0.18
MSB-2 TO XFMR T-P1	10	3	Cu	#2/0	1	1	480		39,226	135	34,664	N/A	0.06
XFMR T-P1 TO PANEL P1	10	3	Cu	#3/0	2	1	208	120	6,237	312	6,113	N/A	0.12
PANEL P1 TP PANEL P1A	5	3	Cu	#1/0	1	1	208	120	6,113	100	5,943	N/A	0.05
MSB-1 TO POOL BLDG. PANEL L2	316	3	Cu	350 kcmil	1	1	480	277	39,226	240	11,995	N/A	1.55
L2 TO INVERTER INV2	15	1	Cu	#12	1	1		277	11,995	9		4,327	0.18
L2 TO POOL PANEL PL1	80	3	Cu	#3/0	1	1	480	277	11,995	160	9,448	N/A	0.43
L2 TO XFMR T-P2	10	3	Cu	#4	1	1	480		11,995	80	10,770	N/A	0.09
XFMR T-P2 TO PANEL P2	10	3	Cu	#2/0	1	1	208	120	10,770	175	9,941	N/A	0.16
PANEL P2 TO POOL PANEL PP1	80	3	Cu	#1/0	1	1	208	120	9,941	100	5,706	N/A	0.88

TRANSFORMERS

TRANSFORMER DESIGNATION	XFMR KVA	PHASE φ	XFMR %Z	XFMR PRIMARY L-L VOLTAGE	XFMR SECONDARY L-L VOLTAGE	XFMR PRIMARY Isc	XFMR PRIMARY FLA	XFMR SECONDARY FLA	WORST CASE XFMR %Z	WORST CASE L-L VOLTAGE	XFMR SECONDARY Isc L-L	MOTOR CONTRIBUTION	TOTAL Isc
T-P1	112.5	3	5.70	480	208	35,860	135	312	5.13	229	6,237		6,237
T-P2	45	3	5.70	480	208	10,770	54	125	5.13	229	2,439		2,439

DIGALERT
DIAL TOLL FREE 1-800-422-4133
AT LEAST TWO DAYS BEFORE YOU DIG
UNDERGROUND SERVICE ALERT OF SOUTHERN CALIFORNIA

BASIS OF BEARINGS:
BEARINGS SHOWN HEREON ARE BASED ON THE CENTERLINE OF 162 ND STREET (FORMERLY MARKET STREET) BEING N 89° 55' 30" E SHOWN ON TRACT NO. 10901, M.B. 254/31-32

BENCHMARK:
THE CITY OF GARDENA BENCHMARK NO. 5D-15 ELEV. = 43.508

CITY OF GARDENA FREEWAY CITY INCORPORATED 1930

CONSULTANT:
FBA Engineering
Consulting Electrical Engineers
150 Paularino Avenue Suite A120
Costa Mesa, CA 92626
949.852.9995 • 949.852.1657 (fax)
fbaengr.com
FBA Job Number: 535050

REGISTERED PROFESSIONAL ENGINEER STEPHEN R. PULICEK No. E 10372 Exp. 09-30-24 ELECTRICAL STATE OF CALIFORNIA
05/01/2023

PREPARED UNDER THE SUPERVISION OF:
RJM DESIGN GROUP
31591 Camino Capistrano
San Juan Capistrano, CA 92675
www.RJMdesigngroup.com
[949] 493-2690 fax
[949] 493-2600 phone

LICENSED LANDSCAPE ARCHITECT LARRY P. RYAN LICENSE NO. 2502 Signature 09/30/2023 Renewal Date 9/26/2023 Date STATE OF CALIFORNIA

REVISIONS

NO.	DESCRIPTION	DATE	APPROVED
1	90% CD SUBMITTAL	12/15/2022	
2	100% CD SUBMITTAL	05/01/2023	
3	FINAL SUBMITTAL	10/02/2023	

CITY OF GARDENA
DEPARTMENT OF PUBLIC WORKS - ENGINEERING
SINGLE LINE DIAGRAM
COMMUNITY AQUATICS & SENIOR CENTER
E-0.03

	INITAL	DATE
DESIGNED BY	SR	11/14/2022
DRAWN BY	SR	09/26/2023
CHECKED BY	BZ	09/28/2023

APPROVED BY:
DATE DIRECTOR OF PUBLIC WORKS
SHT. 148 OF 195 DWG. NO. 5-2606

FBA Engineering / Plot Date: 9/26/2023 11:05 AM / Plotted by: Steve Roth / Drawing Location: I:\535\050\E-0.03_535050.dwg
FILE PATH: I:\535\050\E-0.03_535050.DWG PLOT TIME: 9/26/2023 11:05:33 AM

GARDENA AQUATIC CENTER — PANELBOARD L2

PROJECT NO. 535050

VOLTS 277/480 | PHASE 3PH, 4W | MTG SURFACE

PANELBOARD L2 | LOCATION POOL EQUIP. ELECT. RM.

PANEL SHALL BE RATED FOR SERVICE ENTRANCE USE.

MAIN 300A-3P | BUS 400A

CKT	LOAD (VA) A	B	C	LOAD TYPE	BKR	OUTLET QUAN	DESCRIPTION		CKT	LOAD (VA) A	B	C	LOAD TYPE	BKR	OUTLET QUAN	DESCRIPTION
1		-----	-----		20/1		SPARE	A	2	684	-----	-----	L	20/1	12	RM. 302-306 LTS.
3	-----		-----		20/1		SPARE	B	4	-----		-----		20/1		SPARE
5	-----	-----			20/1		SPARE	C	6	-----	-----			20/1		SPARE
7		-----	-----		20/1		SPARE	A	8		-----	-----		20/1		SPARE
9	-----		-----		20/1		SPARE	B	10	-----		-----		20/1		SPARE
11	-----	-----			20/1		SPARE	C	12	-----	-----					PROVISION
13		-----	-----				PROVISION	A	14		-----	-----				PROVISION
15	-----		-----				PROVISION	B	16	-----		-----				PROVISION
17	-----	-----					PROVISION	C	18	-----	-----					PROVISION
19		-----	-----				PROVISION	A	20		-----	-----				PROVISION
21	-----		-----				PROVISION	B	22	-----		-----				PROVISION
23	-----	-----					PROVISION	C	24	-----	-----					PROVISION
25		-----	-----				PROVISION	A	26		-----	-----				PROVISION
27	-----		-----				PROVISION	B	28	-----		-----				PROVISION
29	-----	-----					PROVISION	C	30	-----	-----					PROVISION
31		-----	-----				PROVISION	A	32		-----	-----				PROVISION
33	-----		-----				PROVISION	B	34	-----		-----				PROVISION
35	-----	-----					PROVISION	C	36	-----	-----	1018	L	20/1	1	INVERTER 'INV2' [2]
37	44333	-----	-----	G	200/3	1	POOL PANEL PL1	A	38	13567	-----	-----	G	70/3	1	XFMR T-P2
39	-----	44333	-----	G	-	-	(SUBFEED)	B	40	-----	13387	-----	G	-	-	(SUBFEED)
41	-----	-----	44333	G	-	-	----	C	42	-----	-----	12810	G	-	-	----

CONNECTED: VA / AMPS
PHASE A = 58584 / 211
PHASE B = 57720 / 208
PHASE C = 58161 / 210
TOTAL =174465 / 210

L.C.L. @ 125% = 2128
RECEPT. (> 10 kVA @ 50%) =
KITCHEN @ 65% =
OTHER LOAD @ 100% = 172763
TOTAL VA = 174891
TOTAL AMPS = 210

LOAD TYPE:
G - GENERAL (100%) / M - MOTOR (100%)
L - L.C.L. (125%) / M1 - MOTOR (125%)
R - RECEPTACLE (50%) (10 kVA @ 100%) / X - X-RAY (100%)
X1 - X-RAY (50%)
K - KITCHEN (65%)

GARDENA AQUATIC CENTER — PANELBOARD L1

PROJECT NO. 535050

VOLTS 277/480 | PHASE 3PH, 4W | MTG SURFACE

PANELBOARD L1 | LOCATION ELECT. RM.

MAIN L.O. | BUS 225A

CKT	LOAD (VA) A	B	C	LOAD TYPE	BKR	OUTLET QUAN	DESCRIPTION		CKT	LOAD (VA) A	B	C	LOAD TYPE	BKR	OUTLET QUAN	DESCRIPTION
[1] 1	2242	-----	-----	L	20/1	59	FIRST FLOOR LIGHTS	A	2	5263	-----	-----	M1	25/3	1	RTU 1-1 @ ROOF
[1] 3	-----	3514	-----	L	20/1	68	SECOND FLOOR LIGHTS	B	4	-----	5263	-----	M1	--	-	----
[2] 5	-----	-----	2147	L	20/1	1	INVERTER 'INV1'	C	6	-----	-----	5263	M1	--	-	----
7		-----	-----		20/1		SPARE	A	8	3047	-----	-----	M	15/3	1	RTU 1-2 @ ROOF
9	-----		-----		20/1		SPARE	B	10	-----	3047	-----	M	--	-	----
11	-----	-----			20/1		SPARE	C	12	-----	-----	3047	M	--	-	----
13		-----	-----		20/1		SPARE	A	14	3047	-----	-----	M	15/3	1	RTU 2-1 @ ROOF
15	-----		-----		20/1		SPARE	B	16	-----	3047	-----	M	--	-	----
17	-----	-----					PROVISION	C	18	-----	-----	3047	M	--	-	----
19		-----	-----				PROVISION	A	20	3047	-----	-----	M	15/3	1	RTU 2-2 @ ROOF
21	-----		-----				PROVISION	B	22	-----	3047	-----	M	--	-	----
23	-----	-----					PROVISION	C	24	-----	-----	3047	M	--	-	----
25		-----	-----				PROVISION	A	26	3047	-----	-----	M	15/3	1	RTU 2-3 @ ROOF
27	-----		-----				PROVISION	B	28	-----	3047	-----	M	--	-	----
29	-----	-----					PROVISION	C	30	-----	-----	3047	M	--	-	----
31		-----	-----				PROVISION	A	32	3324	-----	-----	M	15/3	1	RTU 2-4 @ ROOF
33	-----		-----				PROVISION	B	34	-----	3324	-----	M	--	-	----
35	-----	-----					PROVISION	C	36	-----	-----	3324	M	--	-	----
37	762	-----	-----	M	15/3	1	MAU 1-1 @ ROOF	A	38	3047	-----	-----	M	15/3	1	RTU 2-5 @ ROOF
39	-----	762	-----	M	--	-	----	B	40	-----	3047	-----	M	--	-	----
41	-----	-----	762	M	--	-	----	C	42	-----	-----	3047	M	--	-	----

CONNECTED: VA / AMPS
PHASE A = 26826 / 97
PHASE B = 28098 / 101
PHASE C = 26731 / 97
TOTAL = 81655 / 98

L.C.L. @ 125% = 29615
RECEPT. (> 10 kVA @ 50%) =
KITCHEN @ 65% =
OTHER LOAD @ 100% = 57963
TOTAL VA = 87578
TOTAL AMPS = 105

LOAD TYPE:
G - GENERAL (100%) / M - MOTOR (100%)
L - L.C.L. (125%) / M1 - MOTOR (125%)
R - RECEPTACLE (50%) (10 kVA @ 100%) / X - X-RAY (100%)
X1 - X-RAY (50%)
K - KITCHEN (65%)

GARDENA AQUATIC CENTER — PANELBOARD P2

PROJECT NO. 535050

VOLTS 120/208 | PHASE 3PH, 4W | MTG SURFACE

PANELBOARD P2 | LOCATION POOL EQUIP. ELECT. RM.

MAIN 175A-3P | BUS 225A

CKT	LOAD (VA) A	B	C	LOAD TYPE	BKR	OUTLET QUAN	DESCRIPTION		CKT	LOAD (VA) A	B	C	LOAD TYPE	BKR	OUTLET QUAN	DESCRIPTION
1	900	-----	-----	R	20/1	5	RM. 303-306 REC.	A	2		-----	-----		20/1		SPARE
3	-----	720	-----	R	20/1	4	RM. 301-303 REC.	B	4	-----		-----		20/1		SPARE
5	-----	-----	360	R	20/1	2	ELEC. 301 REC.	C	6	-----	-----			20/1		SPARE
7		-----	-----		20/1		SPARE	A	8		-----	-----		20/1		SPARE
9	-----		-----		20/1		SPARE	B	10	-----		-----		20/1		SPARE
11	-----	-----	250	G	20/1		ELEC. 301 'LCP2'	C	12	-----	-----					PROVISION
13		-----	-----		20/1		SPARE	A	14		-----	-----				PROVISION
15	-----		-----		20/1		SPARE	B	16	-----		-----				PROVISION
17	-----	-----			20/1		SPARE	C	18	-----	-----					PROVISION
19		-----	-----		20/1		SPARE	A	20		-----	-----				PROVISION
21	-----		-----		20/1		SPARE	B	22	-----		-----				PROVISION
23	-----	-----					PROVISION	C	24	-----	-----					PROVISION
25		-----	-----				PROVISION	A	26		-----	-----				PROVISION
27	-----		-----				PROVISION	B	28	-----		-----				PROVISION
29	-----	-----					PROVISION	C	30	-----	-----					PROVISION
31		-----	-----				PROVISION	A	32		-----	-----				PROVISION
33	-----		-----				PROVISION	B	34	-----		-----				PROVISION
35	-----	-----					PROVISION	C	36	-----	-----					PROVISION
37	667	-----	-----	M	20/1	1	CHEM. 304 EF/3-1	A	38	12000	-----	-----		125/3	1	POOL PANEL 'PP1'
39	-----	667	-----	M	20/1	1	CHEM. 305 EF/3-2	B	40	-----	12000	-----		-	-	----
41	-----	-----	200	G	20/1	2	POOL BLDG. SMOKE/FIRE DAMPERS	C	42	-----	-----	12000		-	-	----

CONNECTED: VA / AMPS
PHASE A = 13567 / 113
PHASE B = 13387 / 112
PHASE C = 12810 / 107
TOTAL = 39764 / 110

L.C.L. @ 125% =
RECEPT. (> 10 kVA @ 50%) = 1980
KITCHEN @ 65% =
OTHER LOAD @ 100% = 37784
TOTAL VA = 39764
TOTAL AMPS = 110

LOAD TYPE:
G - GENERAL (100%) / M - MOTOR (100%)
L - L.C.L. (125%) / M1 - MOTOR (125%)
R - RECEPTACLE (50%) (10 kVA @ 100%) / X - X-RAY (100%)
X1 - X-RAY (50%)
K - KITCHEN (65%)

COMMUNITY AQUATICS & SENIOR CENTER — PANELBOARD P1

PROJECT NO. 535.50

VOLTS 120/208 | PHASE 3PH, 4W | MTG FLUSH

PANELBOARD P1 | LOCATION ELECTRICAL RM.

MAIN 400A-3P | BUS 400A

CKT	LOAD (VA) A	B	C	LOAD TYPE	BKR	OUTLET QUAN	DESCRIPTION		CKT	LOAD (VA) A	B	C	LOAD TYPE	BKR	OUTLET QUAN	DESCRIPTION
1	1080	-----	-----	R	20/1	6	RM. 120 REC.	A	2	1200	-----	-----	K	20/1	1	KITCH. 116 REC.
3	-----	1080	-----	R	20/1	6	RM. 121-126 REC.	B	4	-----	1200	-----	K	20/1	1	KITCH. 116 REC.
5	-----	-----	900	R	20/1	5	RM. 101,106-108 REC.	C	6	-----	-----	1200	K	20/1	1	KITCH. 116 REC.
7	1200	-----	-----	K	20/1	1	RM. 105 REC.	A	8	1200	-----	-----	K	20/1	1	KITCH. 116 GD.
9	-----	1200	-----	K	20/1	1	RM. 105 GD.	B	10	-----	1200	-----	K	20/1	1	KITCH. 116 DW.
11	-----	-----	1200	K	20/1	1	RM. 105 REC.	C	12	-----	-----	1200	K	20/1	1	KITCH. 116 REC.
13	1200	-----	-----	K	20/1	1	RM. 105 REFER.	A	14	1200	-----	-----	K	20/1	1	KITCH. 116 REC.
15	-----	540	-----	K	20/1	3	RM. 105 REC.	B	16	-----	1200	-----	K	20/1	1	KITCH. 116 REC.
17	-----	-----	1200	M	20/1	1	RM. 126 HAND DRY.	C	18	-----	-----	1200	K	20/1	1	KITCH. 116 REC.
19	1200	-----	-----	M	20/1	1	RM. 126 HAND DRY.	A	20	1200	-----	-----	K	20/1	1	KITCH. 116 REC.
21	-----	1200	-----	M	20/1	1	RM. 123 HAND DRY.	B	22	-----	1200	-----	K	20/1	1	KITCH. 116 REC.
23	-----	-----	1200	M	20/1	1	RM. 123 HAND DRY.	C	24	-----	-----	1200	K	20/1	1	KITCH. 116 & 114 REC.
25	1200	-----	-----	K	20/1	1	RM. 120 REC.	A	26	1080	-----	-----	R	20/1	6	RM. 110 REC.
27	-----	1200	-----	K	20/1	1	RM. 120 REC.	B	28	-----	1080	-----	R	20/1	6	RM. 11,112,113 REC.
29	-----	-----	1200	K	20/1	1	RM. 120 GD	C	30	-----	-----	900	R	20/1	5	RM. 114 REC.
31	1200	-----	-----	K	20/1	1	RM. 120 REC.	A	32	720	-----	-----	R	20/1	4	RM. 104 REC.
33	-----	1200	-----	K	20/1	1	RM. 120 REFER.	B	34	-----	900	-----	R	20/1	5	RM. 102,103 REC.
35	-----	-----	1200	G	20/1	1	RM. 101 DF.	C	36	-----	-----	720	R	20/1	4	RM. 102 REC.
37	360	-----	-----	R	20/1	2	RM. 117 TEL. BKBRD.	A	38	250	-----	-----	G	20/1	1	RM. 118 'LCP1'
39	-----	500	-----	G	20/1	1	RM. 117 FACP	B	40	-----	360	-----	R	20/1	2	ELEV. PIT REC.
41	-----	-----	500	G	20/1	1	RM. 117 FACP	C	42	-----	-----	300	L	20/1	3	ELEV. PIT LTS.
43	100	-----	-----	G	15/1	1	FIRE SPRINKLER BELL	A	44	500	-----	-----	M	20/1	2	ELEV. LTS/FAN
45	-----		-----		20/1		SPARE	B	46	-----	200	-----	R	20/1	2	RM. 109 REC./LT.
47	-----	-----			20/1		SPARE	C	48	-----	-----					SPARE
49		-----	-----		20/1		SPARE	A	50	6525	-----	-----	G	125/3	1	PANEL 'P1A'
51	-----		-----		20/1		SPARE	B	52	-----	7925	-----	G	-	-	(SUBFEED)
53	-----	-----	600	G	20/1	6	1st FLOOR SMOKE/FIRE DAMPERS	C	54	-----	-----	7968	G	-	-	----

CONNECTED: VA / AMPS
PHASE A = 21415 / 178
PHASE B = 22185 / 185
PHASE C = 22688 / 189
TOTAL = 66288 / 184

L.C.L. @ 125% = 375
RECEPT. (> 10 kVA @ 50%) = 9380
KITCHEN @ 65% = 16731
OTHER LOAD @ 100% = 30868
TOTAL VA = 57354
TOTAL AMPS = 159

LOAD TYPE:
G - GENERAL (100%) / M - MOTOR (100%)
L - L.C.L. (125%) / M1 - MOTOR (125%)
R - RECEPTACLE (50%) (10 kVA @ 100%) / X - X-RAY (100%)
X1 - X-RAY (50%)
K - KITCHEN (65%)

GARDENA AQUATIC CENTER — PANELBOARD P1A

PROJECT NO. 535050

VOLTS 120/208 | PHASE 3PH, 4W | MTG SURFACE

PANELBOARD P1A | LOCATION ELECT. RM.

MAIN L.O. | BUS 125A

CKT	LOAD (VA) A	B	C	LOAD TYPE	BKR	OUTLET QUAN	DESCRIPTION		CKT	LOAD (VA) A	B	C	LOAD TYPE	BKR	OUTLET QUAN	DESCRIPTION
1	687	-----	-----	M	15/1	3	RM. 116-118 EX. FANS	A	2	100	-----	-----	G	15/1	1	RM. 115 TRAP PRIMER TP-2
3	-----	360	-----	R	20/1	2	IT 202 TEL. BKBRD. REC.	B	4	-----	1080	-----	R	20/1	6	RM. 200,210,211,214 REC.
5	-----	-----	360	R	20/1	2	IT 202 TEL. BKBRD. REC.	C	6	-----	-----	1080	R	20/1	6	RM. 213 REC.
7		-----	-----		20/1		SPARE	A	8	1080	-----	-----	R	20/1	6	RM. 209,211 REC.
9	-----		-----		20/1		SPARE	B	10	-----	1260	-----	R	20/1	7	RM. 201,205-208 REC.
11	-----	-----			20/1		SPARE	C	12	-----	-----	1080	R	20/1	6	RM. 201,203 REC.
13		-----	-----		20/1		SPARE	A	14	1080	-----	-----	R	20/1	6	RM. 203,208 REC.
15	-----		-----		20/1		SPARE	B	16	-----	1200	-----		20/1	2	CIRC. 200 DF.
17	-----	-----					PROVISION	C	18	-----	-----			20/1		SPARE
19		-----	-----				PROVISION	A	20		-----	-----		20/1		SPARE
21	-----		-----				PROVISION	B	22	-----		-----		20/1		SPARE
23	-----	-----					PROVISION	C	24	-----	-----			20/1		SPARE
25	720	-----	-----	R	20/1	4	ROOF REC.	A	26		-----	-----		20/1		SPARE
27	-----	667	-----	M	15/1	1	EF 2-1 @ ROOF	B	28	-----		-----				PROVISION
29	-----	-----	1840	M	40/1	1	EF 1-4 @ ROOF	C	30	-----	-----					PROVISION
31	1144	-----	-----	M1	30/2	1	CU 1-1 @ ROOF	A	32		-----	-----				PROVISION
33	-----	1144	-----	M1	--	-	----	B	34	-----	500	-----	G	20/1	5	2nd FLOOR SMOKE/FIRE DAMPERS
35	-----	-----	1144	M1	30/2	1	CU 1-2 @ ROOF	C	36	-----	-----	750	G	20/2	1	RM. 211-213 PARTITION
37	1144	-----	-----	M	--	-	----	A	38	750	-----	-----	G	-	-	----
39	-----	1144	-----	M	30/2	1	CU 1-3 @ ROOF	B	40	-----	750	-----	G	20/2	1	RM. 209-211 PARTITION
41	-----	-----	1144	M	--	-	----	C	42	-----	-----	750	G	-	-	----

CONNECTED: VA / AMPS
PHASE A = 6705 / 56
PHASE B = 8105 / 68
PHASE C = 8148 / 68
TOTAL = 22958 / 64

L.C.L. @ 125% = 4290
RECEPT. (> 10 kVA @ 50%) = 8100
KITCHEN @ 65% =
OTHER LOAD @ 100% = 11426
TOTAL VA = 23816
TOTAL AMPS = 66

LOAD TYPE:
G - GENERAL (100%) / M - MOTOR (100%)
L - L.C.L. (125%) / M1 - MOTOR (125%)
R - RECEPTACLE (50%) (10 kVA @ 100%) / X - X-RAY (100%)
X1 - X-RAY (50%)
K - KITCHEN (65%)

EMERGENCY BATTERY INVERTER "INV1"

CIRC. NO.	OUTLETS	VOLT AMPS	AMP	POLE	REMARKS
1	2	146	20	1	PED. POLE LTS. [1]
2	3	219	20	1	PED. POLE LTS. [1]
3	3	216	20	1	TREE LTS. [1]
4	21	726	20	1	FIRST FLR. EM LTS.
5	15	840	20	1	SECONF FLR. EM LTS.
6			20	1	SPARE
7			20	1	SPARE
8			20	1	SPARE
9			20	1	SPARE
10			20	1	SPARE

TOTAL 2,147 WATTS x 1.25 LCL = 2,684 WATTS

INV1	NAME
SUB ELEC. RM.	LOCATION
277	VOLTAGE
2800	VA

EMERGENCY BATTERY INVERTER "INV2"

CIRC. NO.	OUTLETS	VOLT AMPS	AMP	POLE	REMARKS
1	12	738	20	1	SITE TREE LTS. [1]
2	2	146	20	1	SITE PED. POLES [1]
3	4	92	20	1	EXT. BLDG. MTD. LTS. [1]
4	1	42	20	1	ELEC. 301 LTS.
5			20	1	SPARE
6			20	1	SPARE
7			20	1	SPARE
8			20	1	SPARE
9			20	1	SPARE
10			20	1	SPARE

TOTAL 1,018 WATTS x 1.25 LCL = 1,273 WATTS

INV2	NAME
SUB ELEC. RM.	LOCATION
277	VOLTAGE
2800	VA

SEPARATION OF ELECTRICAL CIRCUITS FOR ELECTRICAL ENERGY MONITORING NOTE:

PER 2019 TITLE 24, PART 6 CALIFORNIA ENERGY CODE, SECTION 130.5(b) SEPARATION OF ELECTRICAL CIRCUITS, THE SWITCHBOARDS AND PANELBOARDS
SPECIFIED HEREIN CAN ACCOMMODATE THE FOLLOWING METERING SYSTEMS
MANUFACTURERS:
EATON PX-BCM
EATON PX-MP
SEIMENS SEM3
GE MULTILIN EPM4600

PANEL SCHEDULE NOTES:

1. ROUTE CIRCUIT THROUGH DESIGNATED RELAY IN RESPECTIVE LIGHTING CONTROL PANEL REFER TO LIGHTING CONTROL SCHEDULES ON E0.02A.
2. PROVIDE RED CIRCUIT BREAKER AND LOCK-ON DEVICE.

DIGALERT
DIAL TOLL FREE 1-800-422-4133
AT LEAST TWO DAYS BEFORE YOU DIG
UNDERGROUND SERVICE ALERT OF SOUTHERN CALIFORNIA

BASIS OF BEARINGS:
BEARINGS SHOWN HEREON ARE BASED ON THE CENTERLINE OF 162 ND STREET (FORMERLY MARKET STREET) BEING N 89° 55' 30" E SHOWN ON TRACT NO. 10901, M.B. 254/31-32

BENCHMARK:
THE CITY OF GARDENA BENCHMARK NO. 5D-15 ELEV. = 43.508

CITY OF GARDENA · FREEWAY CITY · INCORPORATED 1930

CONSULTANT:
FBA Engineering
Consulting Electrical Engineers
150 Paularino Avenue Suite A120
Costa Mesa, CA 92626
949.852.9995 • 949.852.1657 (fax)
fbaengr.com
FBA Job Number: 535050

REGISTERED PROFESSIONAL ENGINEER · STEPHEN R. ... LICEK · No. E 10372 · Exp. 09-30-24 · ELECTRICAL · STATE OF CALIFORNIA
05/01/2023

PREPARED UNDER THE SUPERVISION OF:
RJM DESIGN GROUP
31591 Camino Capistrano
San Juan Capistrano, CA 92675
www.RJMdesigngroup.com
[949] 493-2690 fax
[949] 493-2600 phone

LICENSED LANDSCAPE ARCHITECT · LARRY P. RYAN · LICENSE NO. 2502 · Signature · 09/30/2023 Renewal Date · 9/26/2023 Date · STATE OF CALIFORNIA

REVISIONS

NO.	DESCRIPTION	DATE	APPROVED
1	90% CD SUBMITTAL	12/15/2022	
2	100% CD SUBMITTAL	05/01/2023	
3	FINAL SUBMITTAL	10/02/2023	

CITY OF GARDENA
DEPARTMENT OF PUBLIC WORKS - ENGINEERING
PANEL SCHEDULES
COMMUNITY AQUATICS & SENIOR CENTER
E-0.04

	INITAL	DATE
DESIGNED BY	SR	11/14/2022
DRAWN BY	SR	09/26/2023
CHECKED BY	BZ	09/28/2023

APPROVED BY:
DATE · DIRECTOR OF PUBLIC WORKS

SHT. 149 OF 195 · DWG. NO. 5-2606

FBA Engineering / Plot Date: 9/26/2023 11:05 AM / Plotted by: Steve Roth / Drawing Location: I:\535\050\E-0.04_535050.dwg
FILE PATH: I:\535\050\E-0.04_535050.DWG
PLOT TIME: 9/26/2023 11:05:36 AM

FBA Engineering / Plot Date: 9/26/2023 11:05 AM / Plotted by: Steve Roth / Drawing Location: I:\535\050\E-0.05_535050.dwg

STATE OF CALIFORNIA
Indoor Lighting
NRCC-LTI-E
CALIFORNIA ENERGY COMMISSION

CERTIFICATE OF COMPLIANCE			NRCC-LTI-E
Project Name:	Community Aquatics & Senior Center	**Report Page:**	(Page 3 of 8)
Project Address:	1700 W. 162nd St.	**Date Prepared:**	9/15/2022

F. INDOOR LIGHTING FIXTURE SCHEDULE

F5	50w LED Surface Wrap 1x4 Nominal, 3500K	No	No	50	Mfr. Spec	5	No	250	☐	☐
F6	150w LED 12' Linear Direct-Indirect Pendant Fixture. 2"W x 4"H White Finish, 3500K	No	No	150	Mfr. Spec	12	No	1,800	☐	☐
F7	60w LED Surface Mounted Vapor Tight 4' Fixture. Corrosion Resistant. Integral Exterior Occupancy Sensor.	No	No	60	Mfr. Spec	10	No	600	☐	☐
F8	68w LED Decorative Pendant Fixture, 48" Dia.	No	No	68	Mfr. Spec	5	No	340	☐	☐
							Total Designed Watts: CONDITIONED SPACES	6,366		

Designed Wattage: Unconditioned Spaces

01	02	03	04	05	06	07	08	09	10	
Name or Item Tag	Complete Luminaire Description	Modular (Track) Fixture	Small Aperture & Color Change[1]	Watts per luminaire[2]	How is Wattage determined	Total Number of Luminaires	Excluded per §140.6(a)3	Design Watts	Field Inspector	
									Pass	Fail
F3	20w LED Recessed 4" Aperture Downlight, 3500K	No	No	20	Mfr. Spec	2	No	40	☐	☐
							Total Designed Watts: UNCONDITIONED SPACES	40		

[1]*FOOTNOTE: Design Watts for small aperture and color changing luminaires which qualify per §140.6(a)4B is adjusted to be 75% of their rated wattage. Table F automatically makes this adjustment, the permit applicant should enter full rated wattage in column 05.*

[2]*Authority Having Jurisdiction may ask for Luminaire cut sheets to confirm wattage used for compliance per §130.0(c) Wattage used must be the maximum rated for the luminaire, not the lamp.*

G. MODULAR LIGHTING SYSTEMS
This section does not apply to this project.

Registration Number: Registration Date/Time: Registration Provider: Energysoft
CA Building Energy Efficiency Standards - 2019 Nonresidential Compliance Report Version: 2019.1.003 Schema Version: rev 20200601 Report Generated: 2022-09-15 10:48:05

STATE OF CALIFORNIA
Indoor Lighting
NRCC-LTI-E
CALIFORNIA ENERGY COMMISSION

CERTIFICATE OF COMPLIANCE			NRCC-LTI-E
Project Name:	Community Aquatics & Senior Center	**Report Page:**	(Page 2 of 8)
Project Address:	1700 W. 162nd St.	**Date Prepared:**	9/15/2022

C. COMPLIANCE RESULTS

Controls Compliance (See Table H for Details)	COMPLIES
Rated Power Reduction Compliance (See Table Q for Details)	

D. EXCEPTIONAL CONDITIONS
This table is auto-filled with uneditable comments because of selections made or data entered in tables throughout the form.

E. ADDITIONAL REMARKS
This table includes remarks made by the permit applicant to the Authority Having Jurisdiction.

F. INDOOR LIGHTING FIXTURE SCHEDULE
This table includes all permanent designed lighting and all portable lighting in offices.
Designed Wattage: Conditioned Spaces

01	02	03	04	05	06	07	08	09	10	
Name or Item Tag	Complete Luminaire Description	Modular (Track) Fixture	Small Aperture & Color Change[1]	Watts per luminaire[2]	How is Wattage determined	Total Number of Luminaires	Excluded per §140.6(a)3	Design Watts	Field Inspector	
									Pass	Fail
F1	38w LED Recessed Direct/Indirect 2x4, 3500K	No	No	38	Mfr. Spec	18	No	684	☐	☐
F1A	59w LED recessed Direct/Indirect 2x4 Fixture, 3500K	No	No	59	Mfr. Spec	12	No	708	☐	☐
F2	30w LED Recessed Prismatic 2x4, 2500K	No	No	30	Mfr. Spec	3	No	90	☐	☐
F3	20w LED Recessed 4" Aperture Downlight, 3500K	No	No	20	Mfr. Spec	59	No	1,180	☐	☐
F4	42w LED 48" Pendant, Lensed Strip, 3500K	No	No	42	Mfr. Spec	11	No	462	☐	☐
F4A	42w LED 48" Surface Mounted, Lensed Strip Light, 3500K	No	No	42	Mfr. Spec	6	No	252	☐	☐

Registration Number: Registration Date/Time: Registration Provider: Energysoft
CA Building Energy Efficiency Standards - 2019 Nonresidential Compliance Report Version: 2019.1.003 Schema Version: rev 20200601 Report Generated: 2022-09-15 10:48:05

STATE OF CALIFORNIA
Indoor Lighting
NRCC-LTI-E
CALIFORNIA ENERGY COMMISSION

CERTIFICATE OF COMPLIANCE			NRCC-LTI-E
This document is used to demonstrate compliance with requirements in §110.9, §110.12(c), §130.0, §130.1, §140.6 and §141.0(b)2 for indoor lighting scopes using the prescriptive path.			
Project Name:	Community Aquatics & Senior Center	**Report Page:**	(Page 1 of 8)
Project Address:	1700 W. 162nd St.	**Date Prepared:**	9/15/2022

A. GENERAL INFORMATION

01	Project Location (city)	Gardena	04	Total Conditioned Floor Area (ft²)	9,892
02	Climate Zone	8	05	Total Unconditioned Floor Area (ft²)	94
03	Occupancy Types Within Project (select all that apply):		06	# of Stories (Habitable Above Grade)	1

● Classroom ● Convention Center ● Office ● Support Areas ● : See Table I

B. PROJECT SCOPE
This table includes any lighting systems that are within the scope of the permit application and are demonstrating compliance using the prescriptive path outlined in §140.6 or §141.0(b)2 for alterations.

Scope of Work	Conditioned Spaces		Unconditioned Spaces	
01	02	03	04	05
My Project Consists of (check all that apply):	Calculation Method	Area (ft²)	Calculation Method	Area (ft²)
☒ New Lighting System	Area Category Method	9892	Area Category Method	94
☐ New Lighting System - Parking Garage				
Total Area of Work (ft²)	9892		94	

C. COMPLIANCE RESULTS
If any cell on this table says "DOES NOT COMPLY" or "COMPLIES with Exceptional Conditions" refer to Table D. for guidance.

Lighting in conditioned and unconditioned spaces must not be combined for compliance per §140.6(b)1	Allowed Lighting Power per §140.6(b) (Watts)							Adjusted Lighting Power per §140.6(a) (Watts)				Compliance Results
	01	02	03	04		05		06	07		08	09
	Complete Building §140.6(c)1	Area Category §140.6(c)2	Area Category Additional §140.6(c)2G (+)	Tailored §140.6(c)3 (+)	=	**Total Allowed** (Watts)	≥	Total Designed (Watts)	Adjustments PAF Lighting Control Credits §140.6(a)2 (-)	=	**Total Adjusted** (Watts) *Includes Adjustments	**05 must be >= 08 §140.6**
	(See Table I)	(See Table I)	(See Table J)	(See Table K)				(See Table F)	(See Table P)			
Conditioned		6,618.4	0		=	6,618	≥	6,366	0	=	6366	COMPLIES
Unconditioned		56.4	0		=	56	≥	40	0	=	40	COMPLIES

Registration Number: Registration Date/Time: Registration Provider: Energysoft
CA Building Energy Efficiency Standards - 2019 Nonresidential Compliance Report Version: 2019.1.003 Schema Version: rev 20200601 Report Generated: 2022-09-15 10:48:05

STATE OF CALIFORNIA
Indoor Lighting
NRCC-LTI-E
CALIFORNIA ENERGY COMMISSION

CERTIFICATE OF COMPLIANCE			NRCC-LTI-E
Project Name:	Community Aquatics & Senior Center	**Report Page:**	(Page 6 of 8)
Project Address:	1700 W. 162nd St.	**Date Prepared:**	9/15/2022

L. ADDITIONAL LIGHTING ALLOWANCE: TAILORED WALL DISPLAY
This section does not apply to this project.

M. ADDITIONAL LIGHTING ALLOWANCE: TAILORED FLOOR AND TASK LIGHTING
This section does not apply to this project.

N. ADDITIONAL LIGHTING ALLOWANCE: TAILORED ORNAMENTAL/SPECIAL EFFECTS
This section does not apply to this project.

O. ADDITIONAL LIGHTING ALLOWANCE: TAILORED VERY VALUABLE MERCHANDISE
This section does not apply to this project.

P. POWER ADJUSTMENT: LIGHTING CONTROL CREDIT (POWER ADJUSTMENT FACTOR (PAF))
This section does not apply to this project.

Q. RATED POWER REDUCTION COMPLIANCE FOR ALTERATIONS
This section does not apply to this project.

R. 80% LIGHTING POWER FOR ALL ALTERATIONS - CONTROLS EXCEPTIONS
This section does not apply to this project.

S. DAYLIGHT DESIGN POWER ADJUSTMENT FACTOR (PAF)
This section does not apply to this project.

Registration Number: Registration Date/Time: Registration Provider: Energysoft
CA Building Energy Efficiency Standards - 2019 Nonresidential Compliance Report Version: 2019.1.003 Schema Version: rev 20200601 Report Generated: 2022-09-15 10:48:05

STATE OF CALIFORNIA
Indoor Lighting
NRCC-LTI-E
CALIFORNIA ENERGY COMMISSION

CERTIFICATE OF COMPLIANCE			NRCC-LTI-E
Project Name:	Community Aquatics & Senior Center	**Report Page:**	(Page 5 of 8)
Project Address:	1700 W. 162nd St.	**Date Prepared:**	9/15/2022

I. LIGHTING POWER ALLOWANCE: COMPLETE BUILDING OR AREA CATEGORY METHODS

Conference First Floor	Convention, Conference, Multipurpose and Meeting Center Areas	0.85	174	147.9	No	No
Multipurpose First Floor	Convention, Conference, Multipurpose and Meeting Center Areas	0.85	1,339	1,138.1	No	No
Lobby First Floor	Main Entry Lobby	0.85	849	721.6	No	No
Locker Room First Floor	Locker Dressing Room	0.45	51	23	No	No
Misc First Floor	All Other Space Types	0.4	268	107.2	No	No
Storage Second Floor	All Other Space Types	0.4	229	91.6	No	No
Classroom Second Floor	Classroom, Lecture, or Training Vocational Area	0.7	2,810	1,967	No	No
Misc Second Floor	All Other Space Types	0.4	18	7.2	No	No
Electrical Room Second Floor	Electrical Mechancial Telephone Room	0.4	22	8.8	No	No
Corridor Second Floor	Corridor Area	0.6	1,461	876.6	No	No
Lounge Second Floor	Lounge Breakroom or Waiting Area	0.65	400	260	No	No
Electrical/Mechanical Pool Building	Electrical Mechancial Telephone Room	0.4	520	208	No	No
Storage Pool Building	All Other Space Types	0.4	511	204.4	No	No
		TOTALS:	9,892	6,618.4	See Tables J, or P for detail	

Unconditioned Spaces

01	02	03	04	05	06	
Area Description	Complete Building or Area Category Primary Function Area	Allowed Density (W/ft²)	Area (ft²)	Allowed Wattage (Watts)	Additional Allowance / Adjustment	
					Area Category	PAF
Corridor First Floor	Corridor Area	0.6	94	56.4	No	No
		TOTALS:	94	56.4	See Tables J, or P for detail	

J. ADDITIONAL ALLOWANCE: AREA CATEGORY METHOD QUALIFYING LIGHTING SYSTEM
This section does not apply to this project.

K. TAILORED METHOD GENERAL LIGHTING POWER ALLOWANCE
This section does not apply to this project.

Registration Number: Registration Date/Time: Registration Provider: Energysoft
CA Building Energy Efficiency Standards - 2019 Nonresidential Compliance Report Version: 2019.1.003 Schema Version: rev 20200601 Report Generated: 2022-09-15 10:48:05

STATE OF CALIFORNIA
Indoor Lighting
NRCC-LTI-E
CALIFORNIA ENERGY COMMISSION

CERTIFICATE OF COMPLIANCE			NRCC-LTI-E
Project Name:	Community Aquatics & Senior Center	**Report Page:**	(Page 4 of 8)
Project Address:	1700 W. 162nd St.	**Date Prepared:**	9/15/2022

H. INDOOR LIGHTING CONTROLS (Not including PAFs)
*This table includes lighting controls for conditioned and unconditioned spaces. When a control having a * is shown, the notes section of this table provides more detail on how compliance is achieved. The lighting controls section of the Compliance Summary Table on the first page will show "DOES NOT COMPLY" if the notes are left blank.*
Building Level Controls

01	02	03	
Mandatory Demand Response §110.12(c)	Shut-off controls §130.1(c)	Field Inspector	
		Pass	Fail
Required > 10,000 SF	Whole Building Auto Time Switch	☐	☐

Area Level Controls

04	05	06	07	08	09	10	11	12	
Area Description	Complete Building or Area Category Primary Function Area	Area Controls §130.1(a)	Multi-Level Controls §130.1(b)	Shut-Off Controls §130.1(c)	Primary/Sky lit Daylighting §130.1(d)	Secondary Daylighting §140.6(d)	Interlocked Systems §140.6(a)1	Field Inspector	
								Pass	Fail

*NOTES: Controls with a * require a note in the space below explaining how compliance is achieved.
EX: Conference 1: Primary/Skylight Daylighting: Exempt because less than 120 watts of general lighting; EXCEPTION 1 to §130.1(d)2

13
Plan Sheet Showing Daylit Zones:

I. LIGHTING POWER ALLOWANCE: COMPLETE BUILDING OR AREA CATEGORY METHODS
Each area complying using the Complete Building or Area Category Methods per §140.6(b) are included in this table. Column 06 indicates if additional lighting power allowances per §140.6(c) or adjustments per §140.6(a) are being used .
Conditioned Spaces

01	02	03	04	05	06	
Area Description	Complete Building or Area Category Primary Function Area	Allowed Density (W/ft²)	Area (ft²)	Allowed Wattage (Watts)	Additional Allowance / Adjustment	
					Area Category	PAF
Food Prep Area First Floor	Kitchen/ Food Preparation Area	0.95	538	511.1	No	No
Electrical Room First Floor	Electrical Mechancial Telephone Room	0.4	304	121.6	No	No
Storage First Floor	All Other Space Types	0.4	181	72.4	No	No
Office First Floor	Office 250 square feet or less	0.7	217	151.9	No	No

Registration Number: Registration Date/Time: Registration Provider: Energysoft
CA Building Energy Efficiency Standards - 2019 Nonresidential Compliance Report Version: 2019.1.003 Schema Version: rev 20200601 Report Generated: 2022-09-15 10:48:05

STATE OF CALIFORNIA
Indoor Lighting
NRCC-LTI-E
CALIFORNIA ENERGY COMMISSION

CERTIFICATE OF COMPLIANCE			NRCC-LTI-E
Project Name:	Community Aquatics & Senior Center	**Report Page:**	(Page 8 of 8)
Project Address:	1700 W. 162nd St.	**Date Prepared:**	9/15/2022

DOCUMENTATION AUTHOR'S DECLARATION STATEMENT
I certify that this Certificate of Compliance documentation is accurate and complete.

Documentation Author Name: Steve Zajicek	Documentation Author Signature:
Company: FBA Engineering	Signature Date: 2022-09-15
Address: 150 Paularino Avenue Suite A120	CEA/ HERS Certification Identification (if applicable): E10372
City/State/Zip: Costa Meas CA 92626	Phone: 9498529995

RESPONSIBLE PERSON'S DECLARATION STATEMENT
I certify the following under penalty of perjury, under the laws of the State of California:
1. The information provided on this Certificate of Compliance is true and correct.
2. I am eligible under Division 3 of the Business and Professions Code to accept responsibility for the building design or system design identified on this Certificate of Compliance (responsible designer)
3. The energy features and performance specifications, materials, components, and manufactured devices for the building design or system design identified on this Certificate of Compliance conform to the requirements of Title 24, Part 1 and Part 6 of the California Code of Regulations.
4. The building design features or system design features identified on this Certificate of Compliance are consistent with the information provided on other applicable compliance documents, worksheets, calculations, plans and specifications submitted to the enforcement agency for approval with this building permit application.
5. I will ensure that a completed signed copy of this Certificate of Compliance shall be made available with the building permit(s) issued for the building, and made available to the enforcement agency for all applicable inspections. I understand that a completed signed copy of this Certificate of Compliance is required to be included with the documentation the builder provides to the building owner at occupancy.

Responsible Designer Name: Stephen R. Zajicek, P.E.	Responsible Designer Signature:
Company: FBA Engineering	Date Signed: 2022-09-15
Address: 150 Paularino Ave., Suite A120	License: E10372
City/State/Zip: Costa Mesa CA 92626	Phone: 949-852-9995

Registration Number: Registration Date/Time: Registration Provider: Energysoft
CA Building Energy Efficiency Standards - 2019 Nonresidential Compliance Report Version: 2019.1.003 Schema Version: rev 20200601 Report Generated: 2022-09-15 10:48:05

STATE OF CALIFORNIA
Indoor Lighting
NRCC-LTI-E
CALIFORNIA ENERGY COMMISSION

CERTIFICATE OF COMPLIANCE			NRCC-LTI-E
Project Name:	Community Aquatics & Senior Center	**Report Page:**	(Page 7 of 8)
Project Address:	1700 W. 162nd St.	**Date Prepared:**	9/15/2022

T. DECLARATION OF REQUIRED CERTIFICATES OF INSTALLATION
Selections have been made based on information provided in this document. If any selection have been changed by permit applicant, an explanation should be included in Table E. Additional Remarks. These documents must be provided to the building inspector during construction and can be found online at https://www.energy.ca.gov/title24/2019standards/2019_compliance_documents/Nonresidential_Documents/NRCI/

Form/Title	Field Inspector	
	Pass	Fail
NRCI-LTI-01-E - Must be submitted for all buildings	☐	☐

U. DECLARATION OF REQUIRED CERTIFICATES OF ACCEPTANCE
Selections have been made based on information provided in this document. If any selection have been changed by the permit applicant, an explanation should be included in Table E. Additional Remarks. These documents must be provided to the building inspector during construction and any with "-A" in the form name must be completed through an Acceptance Test Technician Certification Provider (ATTCP). For more information visit: http://www.energy.ca.gov/title24/attcp/providers.html

Form/Title	Systems/Spaces To Be Field Verified	Field Inspector	
		Pass	Fail
NRCA-LTI-02-A - Must be submitted for occupancy sensors and automatic time switch controls.	☐	☐	
NRCA-LTI-04-A - Must be submitted for demand responsive lighting controls.	☐	☐	

Registration Number: Registration Date/Time: Registration Provider: Energysoft
CA Building Energy Efficiency Standards - 2019 Nonresidential Compliance Report Version: 2019.1.003 Schema Version: rev 20200601 Report Generated: 2022-09-15 10:48:05

DIGALERT
DIAL TOLL FREE 1-800-422-4133
AT LEAST TWO DAYS BEFORE YOU DIG
UNDERGROUND SERVICE ALERT OF SOUTHERN CALIFORNIA

BASIS OF BEARINGS:
BEARINGS SHOWN HEREON ARE BASED ON THE CENTERLINE OF 162 ND STREET (FORMERLY MARKET STREET) BEING N 89° 55' 30" E SHOWN ON TRACT NO. 10901, M.B. 254/31-32

BENCHMARK:
THE CITY OF GARDENA BENCHMARK NO. 5D-15 ELEV. = 43.508

CITY OF GARDENA FREEWAY CITY INCORPORATED 1930

CONSULTANT:
FBA Engineering
Consulting Electrical Engineers
150 Paularino Avenue Suite A120
Costa Mesa, CA 92626
949.852.9995 • 949.852.1657 (fax)
fbaengr.com
FBA Job Number: 535050

REGISTERED PROFESSIONAL ENGINEER STEPHEN R. ZAJICEK No. E 10372 Exp. 09-30-24 ELECTRICAL STATE OF CALIFORNIA
05/01/2023

PREPARED UNDER THE SUPERVISION OF:
RJM DESIGN GROUP
31591 Camino Capistrano
San Juan Capistrano, CA 92675
www.RJMdesigngroup.com
[949] 493-2690 *fax*
[949] 493-2600 *phone*

LICENSED LANDSCAPE ARCHITECT LARRY P. RYAN LICENSE NO. 2502 STATE OF CALIFORNIA
Signature
09/30/2023 Renewal Date
9/26/2023 Date

REVISIONS

NO.	DESCRIPTION	DATE	APPROVED
1	90% CD SUBMITTAL	12/15/2022	
2	100% CD SUBMITTAL	05/01/2023	
3	FINAL SUBMITTAL	10/02/2023	

CITY OF GARDENA
DEPARTMENT OF PUBLIC WORKS - ENGINEERING
TITLE 24 - INDOOR
COMMUNITY AQUATICS & SENIOR CENTER
E-0.05

	INITAL	DATE
DESIGNED BY	SR	11/14/2022
DRAWN BY	SR	09/26/2023
CHECKED BY	BZ	09/28/2023

APPROVED BY:
DATE DIRECTOR OF PUBLIC WORKS
SHT. 150 OF 195 DWG. NO. 5-2606

FILE PATH: I:\535\050\E-0.05_535050.DWG
PLOT TIME: 9/26/2023 11:05:39 AM

STATE OF CALIFORNIA
Outdoor Lighting
NRCC-LTO-E
CALIFORNIA ENERGY COMMISSION

CERTIFICATE OF COMPLIANCE			NRCC-LTO-E
Project Name:	Community Aquatics & Senior Center	**Report Page:**	(Page 3 of 6)
Project Address:	1700 W. 162nd St.	**Date Prepared:**	9/15/2022

F. OUTDOOR LIGHTING FIXTURE SCHEDULE

For new or altered lighting systems demonstrating compliance with §140.7 all new luminaires being installed and any existing luminaires remaining or being moved within the spaces covered by the permit application are included in the Table below. For altered lighting systems using the Existing Power method per §141.0(b)2L only new luminaires being installed and replacement luminaires being installed as part of the project scope are included (ie, existing luminaires remaining or existing luminaires being moved are not included).

Designed Wattage:

01	02		03	04	05	06	07	08	09	10	
Name or Item Tag	Complete Luminaire Description		Watts per luminaire[1, 2]	How is Wattage determined	Total number luminaires[2]	Luminaire Status[3]	Excluded per §140.7(a)	Design Watts	Cutoff Req. > 6,200 initial lumen output §130.2(b)[4]	Field Inspector Pass	Field Inspector Fail
S1	23w LED Wall Mounted Wedge Fixture. Dark Bronze Finish.	☐ Linear	22.5	Mfr. Spec	8	New	☐	180	NA: < 6200 lumens	☐	☐
S2	LED Low Voltage Bullet Fixture Mounted To Palm Tree Via Tree Ring.	☐ Linear	12.3	Mfr. Spec	45	New	☐	553.5	NA: < 6200 lumens	☐	☐
S3	73w LED Pedestrian Pole Fixture On Concrete Pole Base.	☐ Linear	73	Mfr. Spec	7	New	☐	511	NA: < 6200 lumens	☐	☐
S4	8.4w LED Compact Adjustable Accent Light.	☐ Linear	8.4	Mfr. Spec	2	New	☐	16.8	NA: < 6200 lumens	☐	☐
							Total Design Watts:	1261.3			

* NOTES: Selections with a * require a note in the space below explaining how compliance is achieved.
EX: Luminaire is lighting a statue; EXCEPTION 2 to §130.2(b)

[1]*FOOTNOTES: Authority Having Jurisdiction may ask for Luminaire cut sheets to confirm wattage used for compliance per §130.0(c)*
[2] *For linear luminaires, wattage should be indicated as W/lf instead of Watts/luminaire. Total linear feet should be indicated in column 05 instead of number of luminaires.*
[3] *Select "New" for new luminaires in a new outdoor lighting project, or for added luminaires in an alteration. Select "Altered" for replacement luminaires in an alteration. Select "Existing to Remain" for existing luminaires within the project scope that are not being altered and are remaining. Select "Existing Reinstalled" for existing luminaires which are being removed and reinstalled as part of the project scope.*
[4] *Compliance with mandatory cutoff requirements is required for luminaires with initial lumen output >= 6,200 unless exempted by §130.2(b)*

G. CUTOFF REQUIREMENTS (BUG)

This section does not apply to this project.

Registration Number: | Registration Date/Time: | Registration Provider: Energysoft
CA Building Energy Efficiency Standards - 2019 Nonresidential Compliance | Report Version: 2019.1.003 Schema Version: rev 20200601 | Report Generated: 2022-09-15 10:48:05

STATE OF CALIFORNIA
Outdoor Lighting
NRCC-LTO-E
CALIFORNIA ENERGY COMMISSION

CERTIFICATE OF COMPLIANCE			NRCC-LTO-E
Project Name:	Community Aquatics & Senior Center	**Report Page:**	(Page 2 of 6)
Project Address:	1700 W. 162nd St.	**Date Prepared:**	9/15/2022

C. COMPLIANCE RESULTS

Results in this table are automatically calculated from data input and calculations in Tables F through I. Note: If any cell on this table says "COMPLIES with Exceptional Conditions" refer to Table D. Exceptional Conditions for guidance or see applicable Table referenced below.

Calculations of Total Allowed Lighting Power (Watts) §140.7 or §141.0(b)2L													Compliance Results			
01		02		03		04		05		06		07		08	09
General Hardscape Allowance §140.7(d)1 (See Table I)	+	Per Application §140.7(d)2 (See Table J)	+	Sales Frontage §140.7(d)2 (See Table K)	+	Ornamental §140.7(d)2 (See Table L)	+	Per Specific Area §140.7(d)2 (See Table M)	OR	Existing Power Allowance §141.0(b)2L (See Table N)	=	**Total Allowed** (Watts)	≥	**Total Actual** (Watts)	**07 must be >= 08**
1,344.69	+	---	+	---	+	---	+	---	OR	---	=	1,344.69	≥	1,261.3	COMPLIES
Cutoff Compliance (See Table G for Details)															N/A
Controls Compliance (See Table H for Details)															COMPLIES

D. EXCEPTIONAL CONDITIONS

This table is auto-filled with uneditable comments because of selections made or data entered in tables throughout the form.

E. ADDITIONAL REMARKS

This table includes remarks made by the permit applicant to the Authority Having Jurisdiction.

Registration Number: | Registration Date/Time: | Registration Provider: Energysoft
CA Building Energy Efficiency Standards - 2019 Nonresidential Compliance | Report Version: 2019.1.003 Schema Version: rev 20200601 | Report Generated: 2022-09-15 10:48:05

STATE OF CALIFORNIA
Outdoor Lighting
NRCC-LTO-E
CALIFORNIA ENERGY COMMISSION

CERTIFICATE OF COMPLIANCE			NRCC-LTO-E
Project Name:	Community Aquatics & Senior Center	**Report Page:**	(Page 1 of 6)
Project Address:	1700 W. 162nd St.	**Date Prepared:**	9/15/2022

A. GENERAL INFORMATION

01	Project Location (city)	Gardena	04	Total Illuminated Hardscape Area (ft^2)	19703
02	Climate Zone	8			
03	Outdoor Lighting Zone per Title 24 Part 1 §10.114 or as designated by Authority Having Jurisdiction (AHJ):				
☐	LZ-0: Very Low - Undeveloped Parkland	☐ LZ-2: Moderate - Rural Areas	☐	LZ-4: High - Must be reviewed by CA Energy Commission for Approval	
☐	LZ-1: Low - Developed Parkland	☒ LZ-3: Moderately High - Urban Areas			

B. PROJECT SCOPE

This table includes outdoor lighting systems that are within the scope of the permit application and are demonstrating compliance using the prescriptive path outlined in §140.7 or §141.0(b)2L for alterations.

My Project Consists of:

01		02	
☒ New Lighting System		Must Comply with Allowances from §140.7	
☐ Altered Lighting System		Is your alteration increasing the connected lighting load (Watts)? ○ Yes ○ No	
03		04	05
% of Existing Luminaires Being Altered[1]		Sum Total of Luminaires Being Added or Altered	Calculation Method
☐ < 10% ☐ >= 10% and < 50% ☐ >= 50%			

Please proceed to Table F. Outdoor Lighting Fixture Schedule to define the project's luminaires.

[1] *FOOTNOTES: % of Existing Luminaires Being Altered = (Sum Total of Luminaires Being Added or Altered / Existing Luminaires within the Scope of the Permit Application) x 100.*

Registration Number: | Registration Date/Time: | Registration Provider: Energysoft
CA Building Energy Efficiency Standards - 2019 Nonresidential Compliance | Report Version: 2019.1.003 Schema Version: rev 20200601 | Report Generated: 2022-09-15 10:48:05

STATE OF CALIFORNIA
Outdoor Lighting
NRCC-LTO-E
CALIFORNIA ENERGY COMMISSION

CERTIFICATE OF COMPLIANCE			NRCC-LTO-E
Project Name:	Community Aquatics & Senior Center	**Report Page:**	(Page 6 of 6)
Project Address:	1700 W. 162nd St.	**Date Prepared:**	9/15/2022

DOCUMENTATION AUTHOR'S DECLARATION STATEMENT

I certify that this Certificate of Compliance documentation is accurate and complete.

Documentation Author Name: Steve Zajicek	Documentation Author Signature:
Company: FBA Engineering	Signature Date: 2022-09-15
Address: 150 Paularino Avenue Suite A120	CEA/ HERS Certification Identification (if applicable): E10372
City/State/Zip: Costa Meas CA 92626	Phone: 9498529995

RESPONSIBLE PERSON'S DECLARATION STATEMENT

I certify the following under penalty of perjury, under the laws of the State of California:

1. The information provided on this Certificate of Compliance is true and correct.
2. I am eligible under Division 3 of the Business and Professions Code to accept responsibility for the building design or system design identified on this Certificate of Compliance (responsible designer)
3. The energy features and performance specifications, materials, components, and manufactured devices for the building design or system design identified on this Certificate of Compliance conform to the requirements of Title 24, Part 1 and Part 6 of the California Code of Regulations.
4. The building design features or system design features identified on this Certificate of Compliance are consistent with the information provided on other applicable compliance documents, worksheets, calculations, plans and specifications submitted to the enforcement agency for approval with this building permit application.
5. I will ensure that a completed signed copy of this Certificate of Compliance shall be made available with the building permit(s) issued for the building, and made available to the enforcement agency for all applicable inspections. I understand that a completed signed copy of this Certificate of Compliance is required to be included with the documentation the builder provides to the building owner at occupancy.

Responsible Designer Name: Stephen R. Zajicek, P.E.	Responsible Designer Signature:
Company: FBA Engineering	Date Signed: 2022-09-15
Address: 150 Paularino Ave., Suite A120	License: E10372
City/State/Zip: Costa Mesa CA 92626	Phone: 949-852-9995

Registration Number: | Registration Date/Time: | Registration Provider: Energysoft
CA Building Energy Efficiency Standards - 2019 Nonresidential Compliance | Report Version: 2019.1.003 Schema Version: rev 20200601 | Report Generated: 2022-09-15 10:48:05

STATE OF CALIFORNIA
Outdoor Lighting
NRCC-LTO-E
CALIFORNIA ENERGY COMMISSION

CERTIFICATE OF COMPLIANCE			NRCC-LTO-E
Project Name:	Community Aquatics & Senior Center	**Report Page:**	(Page 5 of 6)
Project Address:	1700 W. 162nd St.	**Date Prepared:**	9/15/2022

J. LIGHTING ALLOWANCE: PER APPLICATION

This section does not apply to this project.

K. LIGHTING ALLOWANCE: SALES FRONTAGE

This section does not apply to this project.

L. LIGHTING ALLOWANCE: ORNAMENTAL

This section does not apply to this project.

M. LIGHTING ALLOWANCE: PER SPECIFIC AREA

This section does not apply to this project.

N. EXISTING CONDITIONS POWER ALLOWANCE (alterations only)

This section does not apply to this project.

O. DECLARATION OF REQUIRED CERTIFICATES OF INSTALLATION

Selections have been made based on information provided in this document. If any selection have been changed by permit applicant, an explanation should be included in Table E. Additional Remarks. These documents must be provided to the building inspector during construction and can be found online at https://www.energy.ca.gov/title24/2019standards/2019_compliance_documents/Nonresidential_Documents/NRCI/

Form/Title	Field Inspector Pass	Field Inspector Fail
NRCI-LTO-01-E - Must be submitted for all buildings	☐	☐

P. DECLARATION OF REQUIRED CERTIFICATES OF ACCEPTANCE

There are no NRCA forms required for this project.

Registration Number: | Registration Date/Time: | Registration Provider: Energysoft
CA Building Energy Efficiency Standards - 2019 Nonresidential Compliance | Report Version: 2019.1.003 Schema Version: rev 20200601 | Report Generated: 2022-09-15 10:48:05

STATE OF CALIFORNIA
Outdoor Lighting
NRCC-LTO-E
CALIFORNIA ENERGY COMMISSION

CERTIFICATE OF COMPLIANCE			NRCC-LTO-E
Project Name:	Community Aquatics & Senior Center	**Report Page:**	(Page 4 of 6)
Project Address:	1700 W. 162nd St.	**Date Prepared:**	9/15/2022

H. OUTDOOR LIGHTING CONTROLS

This table demonstrates compliance with controls requirements for all new or altered luminaires installed as part of the permit application. For alteration projects, luminaires which are existing to remain (ie untouched) and luminaires which are removed and reinstalled (wiring only) do not need to be included in this table even if they are within the spaces covered by the permit application.
*When an option having a * is selected, the notes section of this table must be completed. The lighting controls section of the Compliance Summary Table on the first page will show "DOES NOT COMPLY" if the notes are left blank.*

Mandatory Controls

01	02	03	04	05	
Area Description	Shut-Off §130.2(c)1	Auto-Schedule §130.2(c)2	Motion Sensor §130.2(c)3	Field Inspector Pass	Field Inspector Fail

* *NOTES: Controls with a * require a note in the space below explaining how compliance is achieved.*
EX: Not permitted by health & safety to be turned off; EXCEPTION 1 to §130.2(c)

I. LIGHTING POWER ALLOWANCE (per §140.7)

	01				
This table includes areas using allowance calculations per §140.7. General Hardscape Allowance is per Table 140.7-A while "Use it or lose it" Allowances are per Table 140.7-B. Indicate which allowances are being used to expand sections for user input. Luminaires that qualify for one of the "Use it or lose it" allowances shall not qualify for another "Use it or lose it" allowance.	☒ General Hardscape Allowance Table I (below)	"Use it or lose it" Allowance (select all that apply) (select all that apply): ☐ Per Application Table J	☐ Sales Frontage Table K	☐ Ornamental Table L	☐ Per Specific Area Table M

Calculated General Hardscape Lighting Power Allowance per Table 140.7-A (LZ 0, 1 & 4)

Calculated General Hardscape Lighting Power Allowance per Table 140.7-A (LZ 2 & 3)

02	03	04	05	06	07	08	9	10
		Area Wattage Allowance (AWA)			Area Wattage Allowance (AWA)			
Area Description	Surface Type	Illuminated Area (ft^2)	Allowed Density (W/ft^2)	Area Allowance (Watts)	Perimeter Length (lf)	Allowed Density (W/lf)	Linear Allowance (Watts)	Total General AWA + LWA (Watts)
Pedestrian Hardscape	Concrete	19703	0.03	591.1	1009	0.4	403.6	995
							Initial Wattage Allowance for Entire Site (Watts):	350
							Total General Hardscape Allowance (Watts):	1345

Registration Number: | Registration Date/Time: | Registration Provider: Energysoft
CA Building Energy Efficiency Standards - 2019 Nonresidential Compliance | Report Version: 2019.1.003 Schema Version: rev 20200601 | Report Generated: 2022-09-15 10:48:05

FBA Engineering / Plot Date: 9/26/2023 11:05 AM / Plotted by: Steve Roth / Drawing Location: I:\535\050\E-0.06_535050.dwg

DIGALERT
DIAL TOLL FREE 1-800-422-4133
AT LEAST TWO DAYS BEFORE YOU DIG
UNDERGROUND SERVICE ALERT OF SOUTHERN CALIFORNIA

BASIS OF BEARINGS:
BEARINGS SHOWN HEREON ARE BASED ON THE CENTERLINE OF 162 ND STREET (FORMERLY MARKET STREET) BEING N 89° 55' 30" E SHOWN ON TRACT NO. 10901, M.B. 254/31-32

BENCHMARK:
THE CITY OF GARDENA BENCHMARK NO. 5D-15 ELEV. = 43.508

CITY OF GARDENA – FREEWAY CITY – INCORPORATED 1930

CONSULTANT:
FBA Engineering
Consulting Electrical Engineers
150 Paularino Avenue Suite A120
Costa Mesa, CA 92626
949.852.9995 • 949.852.1657 (fax)
fbaengr.com
FBA Job Number: 535050

REGISTERED PROFESSIONAL ENGINEER – STEPHEN R. ZAJICEK – No. E 10372 – Exp. 09-30-24 – ELECTRICAL – STATE OF CALIFORNIA
05/01/2023

PREPARED UNDER THE SUPERVISION OF:
RJM DESIGN GROUP
31591 Camino Capistrano
San Juan Capistrano, CA 92675
www.RJMdesigngroup.com
[949] 493-2690 *fax*
[949] 493-2600 *phone*

LICENSED LANDSCAPE ARCHITECT – LARRY P. RYAN – LICENSE NO. 2502 – Signature – 09/30/2023 Renewal Date – 9/26/2023 Date – STATE OF CALIFORNIA

REVISIONS

NO.	DESCRIPTION	DATE	APPROVED
1	90% CD SUBMITTAL	12/15/2022	
2	100% CD SUBMITTAL	05/01/2023	
3	FINAL SUBMITTAL	10/02/2023	

CITY OF GARDENA
DEPARTMENT OF PUBLIC WORKS - ENGINEERING
TITLE 24 - OUTDOOR
COMMUNITY AQUATICS & SENIOR CENTER
E-0.06

	INITAL	DATE
DESIGNED BY	SR	11/14/2022
DRAWN BY	SR	09/26/2023
CHECKED BY	BZ	09/28/2023

APPROVED BY:
DATE | DIRECTOR OF PUBLIC WORKS
SHT. 151 OF 195 | DWG. NO. 5-2606

FILE PATH: I:\535\050\E-0.06_535050.DWG
PLOT TIME: 9/26/2023 11:05:43 AM

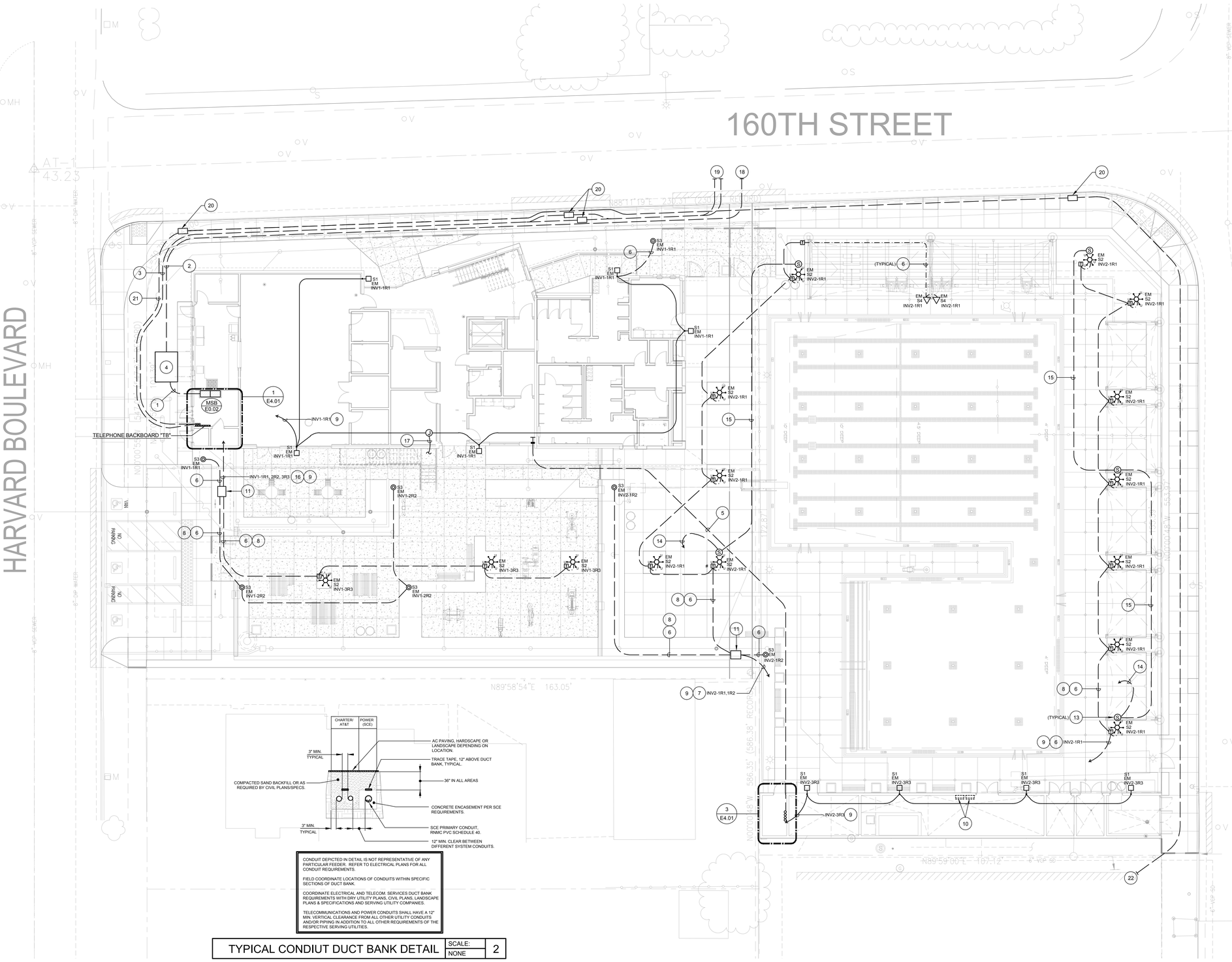

CONDUIT DEPICTED IN DETAIL IS NOT REPRESENTATIVE OF ANY PARTICULAR FEEDER. REFER TO ELECTRICAL PLANS FOR ALL CONDUIT REQUIREMENTS.

FIELD COORDINATE LOCATIONS OF CONDUITS WITHIN SPECIFIC SECTIONS OF DUCT BANK.

COORDINATE ELECTRICAL AND TELECOM. SERVICES DUCT BANK REQUIREMENTS WITH DRY UTILITY PLANS, CIVIL PLANS, LANDSCAPE PLANS & SPECIFICATIONS AND SERVING UTILITY COMPANIES.

TELECOMMUNICATIONS AND POWER CONDUITS SHALL HAVE A 12" MIN. VERTICAL CLEARANCE FROM ALL OTHER UTILITY CONDUITS AND/OR PIPING IN ADDITION TO ALL OTHER REQUIREMENTS OF THE RESPECTIVE SERVING UTILITIES.

TYPICAL CONDIUT DUCT BANK DETAIL | SCALE: NONE | 2

SITE ELECTRICAL PLAN | SCALE: 3/32"=1'-0" | 1

PLAN NOTES

1. (1) 4"C.O. (SCE COMPANY TRANSFORMER SECONDARY). COORDINATE EXACT REQUIREMENTS WITH DRY UTILITY PLANS. SEE DETAIL 2/E-1.01.
2. (1) 5"C.O. (SCE COMPANY TRANSFORMER PRIMARY). COORDINATE EXACT REQUIREMENTS WITH DRY UTILITY PLANS. SEE DETAIL 2/E-1.01.
3. (1) 2"C. (AT&T) & (1) 3"C. (CHARTER) COORDINATE EXACT LOCATION AND REQUIREMENTS WITH DRY UTILITY PLANS. SEE DETAIL 2/E-1.01.
4. 94" X 72" TRANSFORMER PAD BOX PER SCE COMPANY REQUIREMENTS. COORDINATE EXACT REQUIREMENTS WITH DRY UTILITY PLANS.
5. (1) 1 1/4"C.O. (TELECOM.), (1) 1"C.O. (SECURITY), (1) 1"C.O. (ACCESS CONTROLS), & (1) 1"C.O. (CCTV). STUB UP INTO ACCESSIBLE CEILING SPACE OF BREAK ROOM AND +12" A.F.F. IN POOL BUILDING ELECTRICAL ROOM.
6. 3/4" C. - 2#12, 1#12 GRD.
7. 3/4" C. - 4#12, 1#12 GRD.
8. CONTINUE THROUGH REST OF BRANCH CIRCUIT RUN, UNLESS NOTED OTHERWISE.
9. ROUTE CIRCUIT THROUGH DESIGNATED RELAY IN DESIGNATED LIGHTING CONTROL PANEL (LCP#) SEE SCHEDULES ON E-0.02.
10. POOL PANELS "PL1 & PP1" PROVIDED & INSTALLED BY POOL EQUIPMENT CONTRACTOR. SEE E-0.03 FOR FEEDER REQUIREMENTS. COORDINATE EXACT LOCATION & REQUIREMENTS WITH POOL EQUIPMENT PLANS & SPECIFICATIONS.
11. PLACE CODE SIZED COMPOSITE PULLBOX IN PLANTER. LABEL "LIGHTING".
12. LOW VOLTAGE CABLING PER MANUFACTURER'S REQUIREMENTS.
13. 4S WEATHERPROOF J-BOX AT BASE OF TREE FOR SPEAKER CABLING. SEE DETAIL 3/E-4.01.
14. 1"C.O. (SPEAKER CABLING) TO TEL. BACKBOARD "TBP" IN POOL BUILDING.
15. 3/4"C.O. (SPEAKER CABLING).
16. 3/4"C.-6#12, 1#12 GRD.
17. UP TO LIGHTS AT SECOND FLOOR STAIR LANDING. SEE E-2.01, NOTE #3 FOR CONTINUATION.
18. INTERCEPT EXISTING 5"C. (SCE PRIMARY). COORDINATE EXACT LOCATION WITH SCE.
19. INTERCEPT EXISTING CHARTER AND AT&T CONDUITS. COORDINATE EXACT LOCATION WITH SERVING UTILITY.
20. 17" X 30" PULL BOX PER CHARTER/AT&T REQUIREMENTS. COORDINATE EXACT LOCATION AND REQUIREMENTS WITH SERVING UTILITY.
21. (1) 3"C.O. (CITY FIBER OPTIC) PER AT&T REQUIREMENTS. COORDINATE REQUIREMENTS WITH CITY.
22. INTERCEPT EXISTING FIBER OPTIC. COORDINATE REQUIREMENTS WITH THE CITY.

SITE PLAN GENERAL NOTES:

1. LOCATIONS OF EXISTING UTILITIES ARE NOT SHOWN AND CONTRACTOR SHALL EXERCISE EXTREME CAUTION IN EXCAVATING AND TRENCHING ON THIS SITE TO AVOID EXISTING DUCTS, PIPING, OR CONDUITS, ETC., AND TO PREVENT HAZARDS TO PERSONNEL AND/OR DAMAGE TO EXISTING UNDERGROUND UTILITIES OR STRUCTURES WHETHER OR NOT SHOWN AND INSTALLED BY ANY OTHER CONTRACTS. THE ENGINEER IS NOT RESPONSIBLE FOR THE LOCATION OF UNDERGROUND UTILITIES OR STRUCTURES, WHETHER OR NOT SHOWN OR DETAILED AND INSTALLED BY ANY OTHER CONTRACTS. THE CONTRACTOR SHALL IMMEDIATELY NOTIFY THE ENGINEER, THE ENGINEER SHOULD SEARCH UNIDENTIFIED CONDITIONS BE DISCOVERED. THESE DRAWINGS AND SPECIFICATIONS DO NOT INCLUDE THE NECESSARY ELEMENTS FOR CONSTRUCTION SAFETY.
2. CONTRACTOR SHALL VERIFY THE LOCATION OF ANY EXISTING UNDERGROUND UTILITIES AND STRUCTURES PRIOR TO COMMENCEMENT OF WORK BY CONTACTING UNDERGROUND SERVICE ALERT (U.S.A.) AT 1(800) 422-4133, OR OTHER LOCAL APPLICABLE UNDERGROUND SERVICE ALERT AGENCIES.
3. THE DRAWINGS ILLUSTRATE LOCATIONS OF EQUIPMENT AND ASSEMBLIES, PULLBOXES, MANHOLES, HANDHOLES, AND VAULTS, INCLUDING OTHER ELECTRICAL UNDERGROUND STRUCTURES AND PATHWAYS. CONTRACTOR SHALL CLOSELY COORDINATE EXACT LOCATIONS AND MOUNTING DEPTHS OF ALL DEVICES, STRUCTURES AND PATHWAYS WITH OTHER TRADES PRIOR TO PLACEMENT, TO ENSURE FINAL LOCATIONS ARE OUTSIDE FEATURE LANDSCAPE AND ARCHITECTURAL AREAS AND ARE NOT IN CONFLICT WITH THE INSTALLATION OF MATERIALS BY OTHER TRADES.
4. SEE ARCHITECTURAL, CIVIL AND LANDSCAPE PLANS FOR EXACT LOCATION OF FIXTURES, PULLBOXES, MANHOLES, OTHER ELECTRICAL EQUIPMENT AND DEVICES, ETC. COORDINATE ALL UNDERGROUND STRUCTURES AND CONDUIT ROUTING WITH ARCHITECT OR OWNERS' REPRESENTATIVE PRIOR TO ROUGH-IN, TO ENSURE SUCH ITEMS ARE NOT PLACED IN PLANTING / HARDSCAPE AREAS.
5. ALL EQUIPMENT LOCATED OUTDOORS SHALL BE WEATHERPROOF, NEMA 3R RATED.
6. ALL UNDERGROUND CONDUIT SIZE SHALL NOT BE LESS THAN ¾" - U.N.O.
7. MINIMUM CONDUCTOR SIZE SHALL BE #10 AWG. - U.N.O.
8. ALL SITE BRANCH CIRCUIT CONDUIT RUNS SHALL INCLUDE AN EQUIPMENT GROUND THAT AT A MINIMUM, MATCHES THE SIZE OF THE LARGEST BRANCH CIRCUIT CONDUCTOR.
9. PROVIDE PULL STRING IN ALL EMPTY CONDUITS.
10. THE MEANS OF EGRESS TRAVEL SHALL BE ILLUMINATED AT ANY TIME THE BUILDING IS OCCUPIED WITH A LIGHT INTENSITY OF NOT LESS THAN 1 FOOT-CANDLE AT THE FLOOR LEVEL. BUILDING CODE 1008.2.1.

SITE UTILITY GENERAL NOTES

1. UTILITY POINTS OF SERVICE AND WORK/MATERIAL SHOWN ARE BASED UPON PRELIMINARY INFORMATION ONLY BY THE UTILITY COMPANIES AND ARE FOR BID PURPOSES ONLY, NOT FOR CONSTRUCTION.
2. CONTRACTOR SHALL COORDINATE WITH UTILITY COMPANY FOR FINAL AND EXACT WORK AND MATERIAL REQUIREMENTS AND CONSTRUCT TO UTILITY COMPANY ENGINEERING PLANS AND SPECIFICATIONS ONLY. CONTRACTOR SHALL FURNISH AND INSTALL ALL CONDUIT, PULL WIRES, CABLES, PULLBOXES, CONCRETE ENCASEMENT OF CONDUITS, TRANSFORMER PAD, BREAKERS, TRENCHING AND BACKFILL, AND PAY ALL UTILITY COMPANY FEES AND INCLUDE ALL REQUIREMENTS IN SCOPE OF WORK.
3. LOCATIONS OF UTILITIES WHERE SHOWN ARE APPROXIMATE AND CONTRACTOR SHALL EXERCISE EXTREME CAUTION IN EXCAVATING AND TRENCHING ON SITE TO AVOID EXISTING DUCTS, PIPING, OR CONDUITS, ETC. AND TO PREVENT HAZARD TO PERSONNEL AND/OR DAMAGE TO EXISTING UNDERGROUND UTILITIES OR STRUCTURES WHETHER OR NOT SHOWN AND INSTALLED BY ANY OTHER CONTRACTS. THE ENGINEER IS NOT RESPONSIBLE FOR THE LOCATION OF UNDERGROUND UTILITIES OR STRUCTURES WHETHER OR NOT SHOWN OR DETAILED AND INSTALLED BY ANY OTHER CONTRACTS. THE CONTRACTOR SHALL IMMEDIATELY NOTIFY THE ENGINEER SHOULD SUCH UNIDENTIFIED CONDITIONS BE DISCOVERED. THESE DRAWINGS AND SPECIFICATIONS DO NOT INCLUDE THE NECESSARY ELEMENTS FOR CONSTRUCTION SAFETY.
4. UNLESS SPECIFICALLY SHOWN AS (E), (R), (ER), (D), EXISTING OR NON-BOLD, ALL ELECTRICAL LINE WORK SHOWN IS NEW.

DIGALERT
DIAL TOLL FREE 1-800-422-4133
AT LEAST TWO DAYS BEFORE YOU DIG
UNDERGROUND SERVICE ALERT OF SOUTHERN CALIFORNIA

BASIS OF BEARINGS:
BEARINGS SHOWN HEREON ARE BASED ON THE CENTERLINE OF 162 ND STREET (FORMERLY MARKET STREET) BEING N 89° 55' 30" E SHOWN ON TRACT NO. 10901. M.B. 254/31-32

BENCHMARK:
THE CITY OF GARDENA BENCHMARK NO. 5D-15 ELEV. = 43.508

CONSULTANT:
FBA Engineering
Consulting Electrical Engineers
150 Paularino Avenue Suite A120
Costa Mesa, CA 92626
949.852.9905 • 949.852.1657 (fax)
fbaengr.com
FBA Job Number: 535050

REGISTERED PROFESSIONAL ENGINEER — No. 10372 — Exp. 09-30-24 — ELECTRICAL — STATE OF CALIFORNIA
05/01/2023

PREPARED UNDER THE SUPERVISION OF:
RJM DESIGN GROUP
31591 Camino Capistrano
San Juan Capistrano, CA 92675
www.RJMdesigngroup.com
[949] 493-2690 fax
[949] 493-2600 phone

REGISTERED LANDSCAPE ARCHITECT — 05/30/2023 Renewal Date — 5/30/2023 Date — STATE OF CALIFORNIA

REVISIONS			
NO.	DESCRIPTION	DATE	APPROVED
1	90% CD SUBMITTAL	12/18/2022	
2	100% CD SUBMITTAL	05/01/2023	
3	FINAL SUBMITTAL	10/02/2023	

CITY OF GARDENA
DEPARTMENT OF PUBLIC WORKS - ENGINEERING
SITE ELECTRICAL PLAN
COMMUNITY AQUATICS & SENIOR CENTER
E-1.01

	INITAL	DATE	APPROVED BY:
DESIGNED BY	SR	11/14/2022	
DRAWN BY	SR	09/26/2023	
CHECKED BY	BZ	09/28/2023	

DATE _____ DIRECTOR OF PUBLIC WORKS
SHT. 152 OF 195 DWG. NO. 5-2606

FBA Engineering / Plot Date: 9/26/2023 11:05 AM / Plotted by: Steve Roth / Drawing Location: I:\535\050\E-1.01_535050.dwg
XLF Path: I:\535\050\E-1.01_535050.DWG
PLOT TIME: 7/26/2023 11:08:48 AM



SITE PHOTOMETRIC PLAN | SCALE: 3/32"=1'-0" | 1

FBA Engineering / Plot Date: 9/26/2023 11:05 AM / Plotted by: Steve Roth / Drawing Location: I:\535\050\E-1.01_535050.dwg

DIGALERT
DIAL TOLL FREE
1-800-422-4133
AT LEAST TWO DAYS BEFORE YOU DIG
UNDERGROUND SERVICE ALERT OF SOUTHERN CALIFORNIA

BASIS OF BEARINGS:

BEARINGS SHOWN HEREON ARE BASED ON THE CENTERLINE OF 162 ND STREET (FORMERLY MARKET STREET) BEING N 89° 55' 30" E SHOWN ON TRACT NO. 10901, M.B. 254/31-32

BENCHMARK:

THE CITY OF GARDENA BENCHMARK NO. 5D-15 ELEV. = 43.508

CONSULTANT:

FBA Engineering
Consulting Electrical Engineers
150 Paularino Avenue Suite A120
Costa Mesa, CA 92626
949.852.9905 • 949.852.1657 (fax)
fbaengr.com
FBA Job Number: 535050

REGISTERED PROFESSIONAL ENGINEER — No. 10372 — Exp. 09-30-24 — ELECTRICAL — STATE OF CALIFORNIA

05/01/2023

PREPARED UNDER THE SUPERVISION OF:

RJM DESIGN GROUP
31591 Camino Capistrano
San Juan Capistrano, CA 92675
www.RJMdesigngroup.com
[949] 493-2690 fax
[949] 493-2600 phone

REGISTERED LANDSCAPE ARCHITECT — No. 5494 — 05/31/2023 — RENEWAL 5/31/2023 — STATE OF CALIFORNIA

REVISIONS			
NO.	DESCRIPTION	DATE	APPROVED
1	90% CD SUBMITTAL	12/15/2022	
2	100% CD SUBMITTAL	05/01/2023	
3	FINAL SUBMITTAL	10/02/2023	

CITY OF GARDENA
DEPARTMENT OF PUBLIC WORKS - ENGINEERING

SITE PHOTOMETRIC PLAN

COMMUNITY AQUATICS & SENIOR CENTER

E-1.01A

	INITAL	DATE
DESIGNED BY	SR	11/14/2022
DRAWN BY	SR	09/26/2023
CHECKED BY	BZ	09/28/2023

APPROVED BY:

DATE DIRECTOR OF PUBLIC WORKS

SHT. 153 OF 195 DWG. NO. 5-2606

PLT PATH: I:\535\050\E-1.01_535050.DWG
PLOT TIME: 9/26/2023 11:05:47 AM

PLAN NOTES

1. PROVIDE PARTITION CONTROLS TO PROVIDE CONTROL OF SPACE ENTIRE SPACE DEPENDING ON MOVEABLE PARTITION POSITION. SEE DETAIL 1/E-0.02A FOR ADDITIONAL INFORMATION.
2. ROUTE CIRCUIT THROUGH DESIGNATED RELAY IN LIGHTING CONTROL PANEL "LCP1", REFER TO SCHEDULE ON SHEET E-0.02.
3. DOWN TO LIGHTS BELOW. SEE E-1.01, NOTE #17 FOR CONTINUATION.

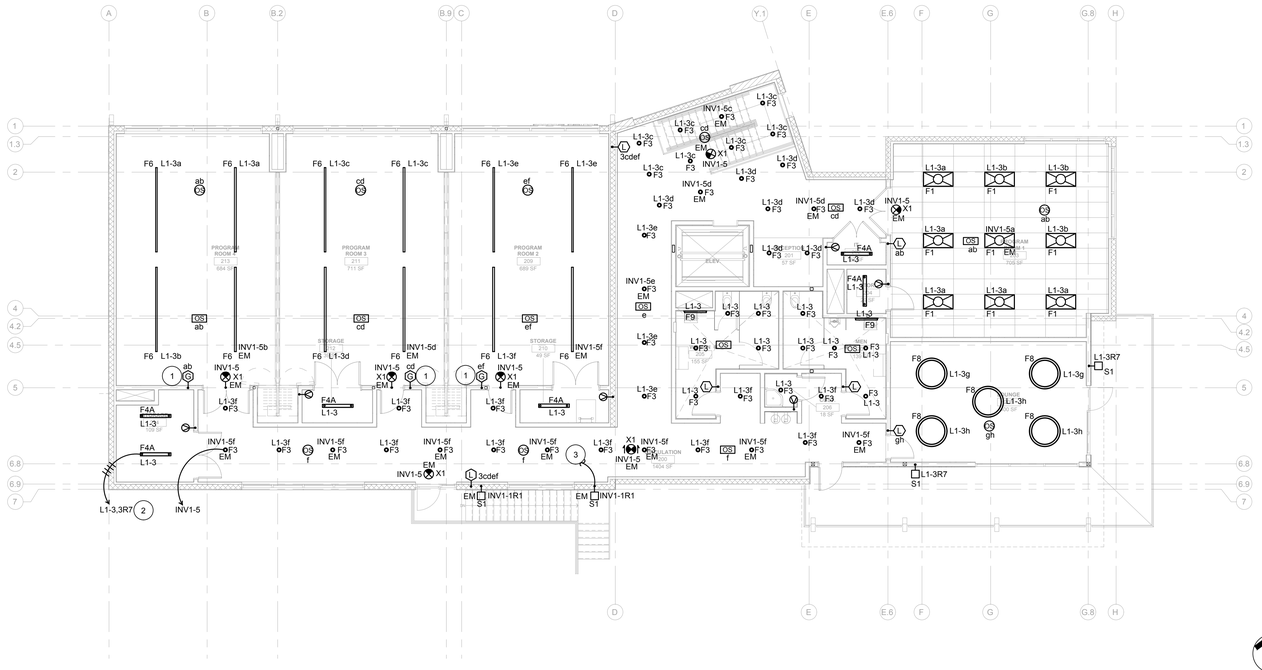

SCALE: 1 inch = 8 ft.

BUILDING SECOND FLOOR LIGHTING PLAN | SCALE: 1/8"=1'-0" | 2

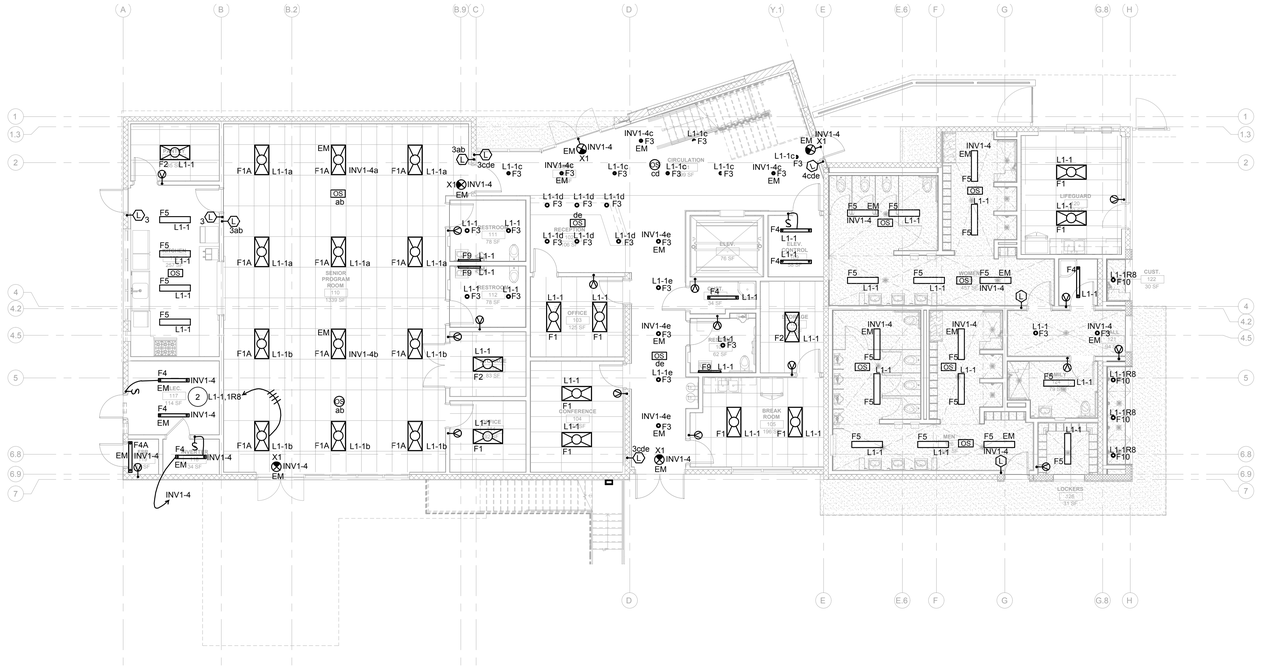

SCALE: 1 inch = 8 ft.

BUILDING FIRST FLOOR LIGHTING PLAN | SCALE: 1/8"=1'-0" | 1

GENERAL NOTES

1. REFER TO TYPICAL LIGHTING CONTROL DIAGRAMS & NOTES ON E0.02.
2. FOR CLARITY, BRANCH CIRCUIT CONDUIT & CONDUCTOR REQUIREMENTS HAVE NOT BEEN SHOWN ON PLANS FOR NORMAL & EMERGENCY LIGHTING. FOR LIGHTING THROUGHOUT ALL SPACES, PROVIDE CONDUIT AND CONDUCTORS IN ACCORDANCE WITH ELECTRICAL SPECIFICATION. PROVIDE #12 CONDUCTORS UNLESS SPECIFICALLY NOTED OTHERWISE.
3. FOR EMERGENCY LIGHTING "EM" POWER BRANCH CIRCUITS, PROVIDE CONDUIT AND CONDUCTORS, SEPARATE FROM NORMAL POWER LIGHTING BRANCH CIRCUIT CONDUIT & CONDUCTORS. REFER TO NOTE #2 ABOVE. EMERGENCY LIGHTING BRANCH CIRCUITS SHALL HAVE SEPARATE NEUTRAL CONDUCTOR FOR EACH PHASE CONDUCTOR, SHARED NEUTRAL IS NOT ALLOWED. PROVIDE A NON-CONTROLLED (NON-SWITCHED) HOT CONDUCTOR, FROM EMERGENCY POWER SOURCE, FOR CONNECTION TO EXIT SIGNS.
4. THE MEANS OF EGRESS TRAVEL, INCLUDING THE EXIT DISCHARGE, SHALL BE ILLUMINATED AT ALL TIMES THE BUILDING SPACE SERVED BY THE MEANS OF EGRESS IS OCCUPIED WITH A LIGHT INTENSITY OF NOT LESS THAN 1 FOOT-CANDLE AT THE WALKING SURFACE AS REQUIRED BY BUILDING CODE 1008.2.
5. IN THE EVENT OF POWER SUPPLY FAILURE IN ROOMS, SPACES AND BUILDINGS THAT REQUIRE TWO OR MORE MEANS OF EGRESS, AN EMERGENCY ELECTRICAL SYSTEM FOR A DURATION OF NOT LESS THAN 90 MINUTES IN ACCORDANCE WITH THE PROVISIONS SET FORTH IN BUILDING CODE 1008.3.
6. THE PATH OF EGRESS TRAVEL TO EXITS SHALL BE MARKED BY READILY VISIBLE EXIT SIGNS TO CLEARLY INDICATE THE DIRECTION OF EGRESS TRAVEL AS REQUIRED BY BUILDING CODE 1013.1; AND SHALL BE INTERNALLY OR EXTERNALLY ILLUMINATED AS REQUIRED BY SECTION 1013.3 AND 1013.5. NOTE: ADDITIONAL EXIT SIGNS MAY BE REQUIRED AT THE TIME OF FIELD INSPECTION

DIGALERT — DIAL TOLL FREE 1-800-422-4133 AT LEAST TWO DAYS BEFORE YOU DIG — UNDERGROUND SERVICE ALERT OF SOUTHERN CALIFORNIA

BASIS OF BEARINGS:

BEARINGS SHOWN HEREON ARE BASED ON THE CENTERLINE OF 162 ND STREET (FORMERLY MARKET STREET) BEING N 89° 55' 30" E SHOWN ON TRACT NO. 10901, M.B. 254/31-32

BENCHMARK:

THE CITY OF GARDENA BENCHMARK NO. 5D-15 ELEV. = 43.508

CONSULTANT:

FBA Engineering
Consulting Electrical Engineers
150 Paularino Avenue Suite A120
Costa Mesa, CA 92626
949.852.9995 • 949.852.1657 (fax)
fbaengr.com
FBA Job Number: 535050

REGISTERED PROFESSIONAL ENGINEER — 10372 — EXP. 09-30-24 — ELECTRICAL — STATE OF CALIFORNIA

05/01/2023

PREPARED UNDER THE SUPERVISION OF:

RJM DESIGN GROUP
31591 Camino Capistrano
San Juan Capistrano, CA 92675
www.RJMdesigngroup.com
[949] 493-2690 fax
[949] 493-2600 phone

LICENSED LANDSCAPE ARCHITECT — Signature — 05/30/2023 — Renewal 1-31-2025 — STATE OF CALIFORNIA

REVISIONS

NO.	DESCRIPTION	DATE	APPROVED
1	90% CD SUBMITTAL	12/15/2022	
2	100% CD SUBMITTAL	05/01/2023	
3	FINAL SUBMITTAL	10/02/2023	

CITY OF GARDENA
DEPARTMENT OF PUBLIC WORKS - ENGINEERING

BUILDING LIGHTING PLANS

COMMUNITY AQUATICS & SENIOR CENTER
E-2.01

	INITAL	DATE	APPROVED BY:
DESIGNED BY	SR	11/14/2022	
DRAWN BY	SR	09/26/2023	DATE
CHECKED BY	BZ	09/28/2023	DIRECTOR OF PUBLIC WORKS

SHT. 154 OF 195 DWG. NO. 5-2606

FBA Engineering / Plot Date: 9/26/2023 11:05 AM / Plotted by: Steve Roth / Drawing Location: I:\535\050\E-2.01_535050.dwg

REF FILES: I:\535\050\E-2.01_535050.DWG
PLOT TIME: 9/26/2023 11:05:53 AM

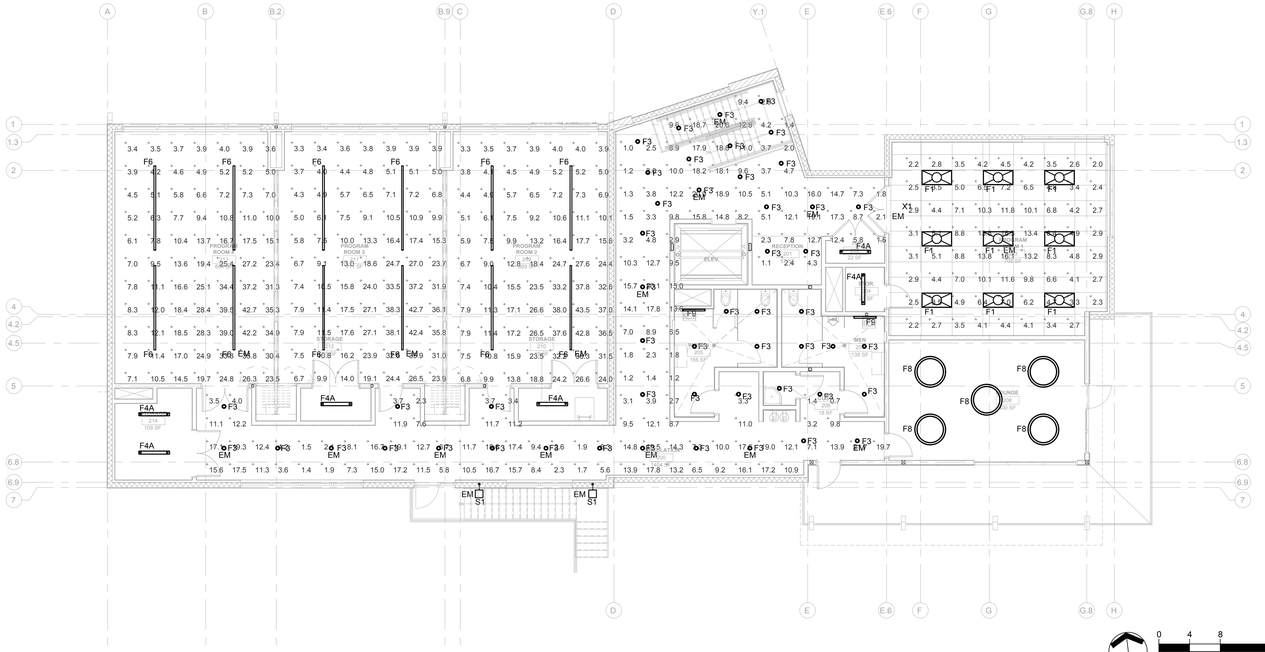

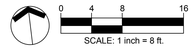

BUILDING SECOND FLOOR EGRESS LIGHTING CALCULATION | SCALE: 1/8"=1'-0" | 2

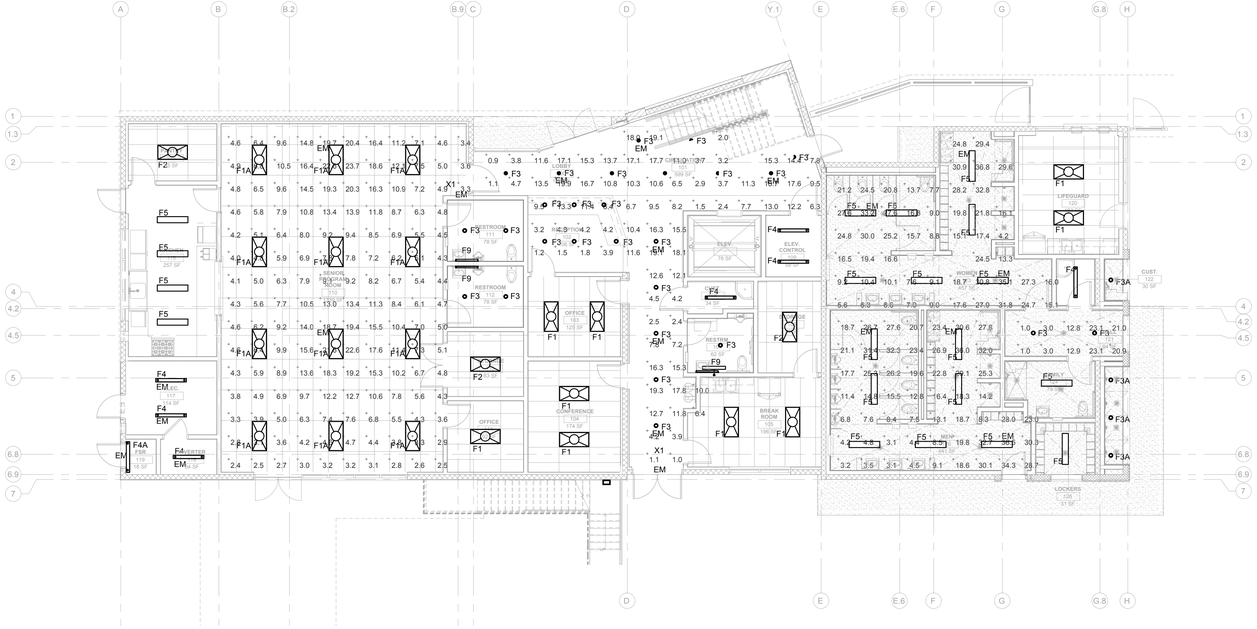

Statistics							
Description	Symbol	Avg	Max	Min	Max/Min	Avg/Min
FL1_Hall	+	12.2 fc	23.1 fc	1.0 fc	23.1:1	12.2:1
FL1_Lobby	+	9.4 fc	19.9 fc	0.9 fc	22.1:1	10.4:1
FL1_MEN	+	19.1 fc	36.5 fc	3.1 fc	11.8:1	6.2:1
FL1_Senior Daycare	+	8.3 fc	23.7 fc	2.4 fc	9.9:1	3.5:1
FL1_Womens	+	19.4 fc	36.8 fc	4.2 fc	8.8:1	4.6:1
FL2_Circulation	+	9.3 fc	21.7 fc	0.7 fc	31.0:1	13.3:1
FL2_Classroom 1	+	5.8 fc	16.3 fc	2.0 fc	8.2:1	2.9:1
FL2_Classroom 2	+	15.3 fc	43.5 fc	3.3 fc	13.2:1	4.6:1
FL2_Classroom 3	+	15.2 fc	42.7 fc	3.3 fc	12.9:1	4.6:1
FL2_Classroom 4	+	15.5 fc	42.7 fc	3.4 fc	12.6:1	4.6:1



BUILDING FIRST FLOOR EGRESS LIGHTING CALCULATION | SCALE: 1/8"=1'-0" | 1

DIGALERT
DIAL TOLL FREE
1-800-422-4133
AT LEAST TWO DAYS BEFORE YOU DIG
UNDERGROUND SERVICE ALERT OF SOUTHERN CALIFORNIA

BASIS OF BEARINGS:

BEARINGS SHOWN HEREON ARE BASED ON THE CENTERLINE OF 162 ND STREET (FORMERLY MARKET STREET) BEING N 89° 55' 30" E SHOWN ON TRACT NO. 10901, M.B. 254/31-32

BENCHMARK:

THE CITY OF GARDENA BENCHMARK NO. 5D-15 ELEV. = 43.508

CONSULTANT:

FBA Engineering
Consulting Electrical Engineers
150 Paularino Avenue Suite A120
Costa Mesa, CA 92626
949.852.9995 • 949.852.1657 (fax)
fbaengr.com
FBA Job Number: 535050

REGISTERED PROFESSIONAL ENGINEER — No. 10372 — EXP. 09-30-24 — ELECTRICAL — STATE OF CALIFORNIA

05/01/2023

PREPARED UNDER THE SUPERVISION OF:

RJM DESIGN GROUP
31591 Camino Capistrano
San Juan Capistrano, CA 92675
www.RJMdesigngroup.com
[949].493-2690 fax
[949].493-2600 phone

LICENSED LANDSCAPE ARCHITECT — Signature — 05/30/2023 — Renewal 1-31-2025 — STATE OF CALIFORNIA

REVISIONS			
NO.	DESCRIPTION	DATE	APPROVED
1	90% CD SUBMITTAL	12/15/2022	
2	100% CD SUBMITTAL	05/01/2023	
3	FINAL SUBMITTAL	10/02/2023	

CITY OF GARDENA
DEPARTMENT OF PUBLIC WORKS - ENGINEERING
BUILDING EGRESS LIGHTING CALCULATIONS
COMMUNITY AQUATICS & SENIOR CENTER
E-2.01A

	INITAL	DATE	APPROVED BY:
DESIGNED BY	SR	11/14/2022	
DRAWN BY	SR	09/26/2023	DATE
CHECKED BY	BZ	09/28/2023	DIRECTOR OF PUBLIC WORKS

SHT. 155 OF 195 | DWG. NO. 5-2606

FBA Engineering / Plot Date: 9/26/2023 11:05 AM / Plotted by: Steve Roth / Drawing Location: I:\535\050\E-2.01_535050.dwg

REF FILES: I:\535\050\E-2.01_535050.DWG
PLOT TIME: 9/26/2023 11:05:44 AM

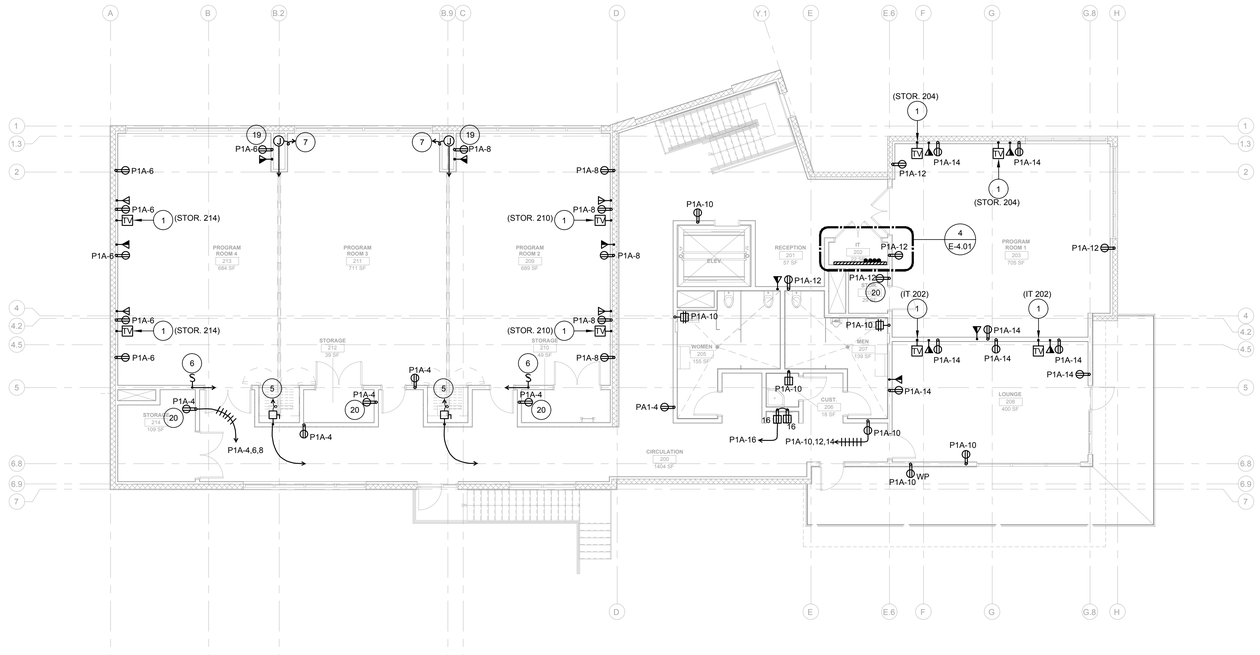

BUILDING SECOND FLOOR POWER & SIGNAL PLAN

SCALE: 1/8"=1'-0" | 2

PLAN NOTES

1. OUTLETS FOR MONITOR . COORDINATE EXACT LOCATION & MOUNTING HEIGHT WITH ARCHITECT. REFER TO SYMBOLS LIST ON E-0.01 FOR OUTLET BOX REQUIREMENTS.
2. RECEPTACLE & SWITCH FOR GARBAGE DISPOSAL. MOUNT SWITCH +6" ABOVE COUNTER SPLASH. MOUNT RECEPTACLE UNDER SINK IN CABINET SPACE.
3. STUB INTO ACCESSIBLE CEILING SPACE.
4. CONNECT AS REQUIRED TO HAND DRYER. COORDINATE EXACT LOCATION AND REQUIREMENTS WITH ARCHITECT.
5. CONNECT AS REQUIRED TO MOTORIZED PARTITION. PROVIDE WIRING AND CONNECTIONS AS REQUIRED PER MANUFACTURERS REQUIREMENTS FOR A COMPLETE AND OPERABLE PARTITION.
6. SWITCH FOR PARTITION CONTROL. PROVIDE WIRING AND CONNECTIONS AS REQUIRED. COORDINATE EXACT LCOATION WITH ARCHITECT.
7. PARTITION SYSTEM LIMIT SWITCH. PROVIDE WIRING AND CONNECTIONS AS REQUIRED PER MANUFACTURERS REQUIREMENTS FOR A COMPLETE AND OPERABLE PARTITION. PROVIDE 3/4"C. WITH WIRING AND CONNECTIONS AS REQUIRED TO PARTITION MOTOR.
8. (1) 2"C. (TELECOM.) & (3) 2"C.O. (ACCESS, SECURITY & CCTV) STUB INTO ACCESSIBLE CEILING SPACE AND UP INTO 2nd FLOOR IT CLOSET.
9. LOW VOLTAGE CONDUIT TO POOL BUILDING. REFER TO NOTE #5 ON E-1.01 FOR QUANTITIES, SIZE AND CONTINUATION.
10. 3/4"C. - 3#12,1#12 GRD.
11. 3/4"C. - 3#10, 1#10 GRD.
12. 3/4"C.-2#12,1#12 GRD.
13. TO RECEPTACLE CIRCUIT IN ROOM.
14. POWERED BY OUTDOOR UNIT ON ROOF. PROVIDE 3/4"C.-2#12,1#12 GRD. TO RESPECTIVE OUTDOOR INIT ON ROOF.
15. CONTROLLED BY LINE VOLTAGE T-STAT. COORDINATE EXACT LOCATION & REQUIREMENTS WITH MECHANICAL.
16. DDC CONTROL PANEL BY MECHANICAL. COORDINATE LOCATION & REQUIREMENTS WITH MECHANICAL.
17. PROVIDE POWER CONNECTION TO AUTO SENSOR FOR FAUCETS AND URINALS. PROVIDE 3/4"C.-2#12, 1#12 GRD. FROM RESTROOM RECEPTACLE CIRCUIT P1-#. COORDINATE EXACT LOCATION AND REQUIREMENTS WITH PLUMBING.
18. RECEPTACLES FOR MICROWAVE BELOW COUNTER. COORDINATE EXACT LOCATION WITH ARCHITECT.
19. RECEPTACLE AVAILABLE FOR ASSITIVE LISTENING SYSTEM.
20. AUDIO/VISUAL (AV) EQUIPMENT LOCATION IN STORAGE ROOM. COORDINATE EXACT LOCATION WITH OWNER.

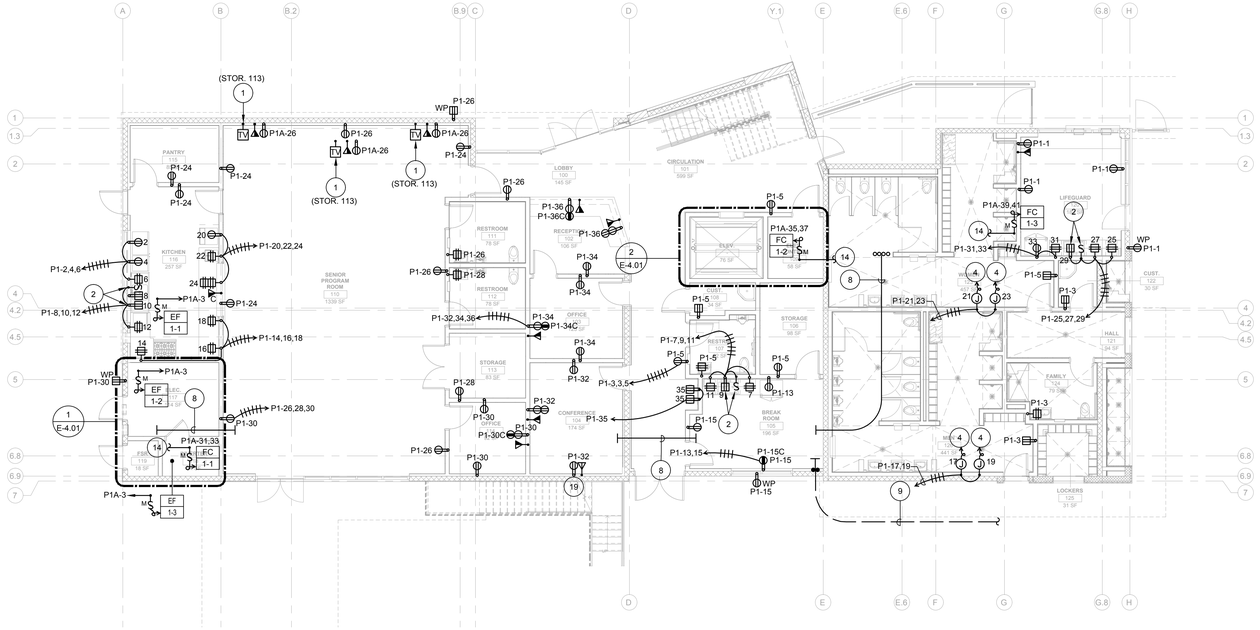

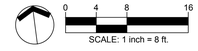

BUILDING FIRST FLOOR POWER & SIGNAL PLAN

SCALE: 1/8"=1'-0" | 1

SMOKE/FIRE DAMPER (SFD) GENERAL NOTES:

1. ELECTRICAL PLANS DO NOT SHOW ELECTRICAL REQUIREMENTS FOR SMOKE/FIRE DAMPERS (SFD). PROVIDE ALL CONDUIT, WIRE, J-BOXES, OUTLET BOXES, ETC. REQUIRED FOR A COMPLETE AND OPERABLE MECHANICAL INSTALLATION. CONNECT NO MORE THAN TEN DAMPERS PER CIRCUIT. REFER TO DETAIL 1/E-0.01.
2. REFER TO MECHANICAL PLANS FOR SMOKE/FIRE DAMPER LOCATIONS AND QUANTITIES.
3. PROVIDE QUANTITY OF AREA AND/OR DUCT SMOKE DETECTORS AS REQUIRED.
4. POWER FOR SMOKE/FIRE DAMPERS TO BE CONTROLLED BY FIRE ALARM RELAY OPERATED BY FIRE ALARM PANEL. CONTACT OF RELAY TO OPEN WITH FIRE ALARM CONDITION DISCONNECTING POWER FROM DAMPERS.

POWER & SIGNAL GENERAL NOTES:

1. ALL WALL MOUNTED DEVICE HEIGHTS SHALL BE VERIFIED WITH ARCHITECTURAL ROOM ELEVATIONS PRIOR TO ROUGH-IN.
2. PENETRATIONS THROUGH FIRE RATED WALLS SHALL BE PROTECTED WITH AN APPROVED FIRE STOP SYSTEM EQUAL TO OR GREATER THAN THE RATING OF THE WALL BEING PENETRATED.
3. ALL DEVICES MOUNTED BACK-TO-BACK ON COMMON WALLS SHALL BE INSTALLED IN SEPARATE BOXES OFFSET 24-INCHES MINIMUM OR PROVIDED WITH PUTTY OR ANOTHER APPROVED SOUNDPROOF BACKING.
4. WHEN EXPOSED CEILING OR OPEN GRID CONDITIONS EXIST, CONTRACTOR SHALL PROVIDE:
   - A. ALL BRANCH CIRCUITS TO BE INSTALLED IN EMT.
   - B. ALL BRANCH CIRCUITS SHALL BE ROUTED PARALLEL TO BUILDING STRUCTURES AND RACKED NEATLY IN GROUPS OF MULTIPLE PATHWAYS.
   - C. ALL LOW VOLTAGE CABLES SHALL BE:
     1) INSTALLED IN EMT CONDUIT PATHWAYS OR
     2) INSTALLED NEATLY IN CABLE MANAGEMENT OPEN BASKET OR LADDER TYPE WIREWAY SUPPORTED INDEPENDENTLY FROM STRUCTURE ABOVE.

   EXPOSED LOW VOLTAGE CABLING IN OPEN TYPE CEILING APPLICATIONS INSTALLED ON D-RINGS, J-HOOKS OR SIMILAR APPARATUS WILL NOT BE ACCEPTED UNLESS APPROVED IN WRITING BY ARCHITECT/ENGINEER PRIOR TO ANY ROUGH-IN OR INSTALLATION. CONTRACTOR SHALL INCLUDE AN ALLOWANCE IN HIS BASE BID FOR THE INSTALLATION OF LOW VOLTAGE CABLES IN OPEN CEILING AS DESCRIBED.
5. EXPOSED CABLE/CONDUCTORS INSTALLED IN A PLENUM SPACE SHALL BE LISTED FOR SUCH ENVIRONMENT AND INSTALLATION SHALL CONFORM TO NEC OR CEC WHERE ADOPTED ARTICLE 300.22(C).
6. ALL RECEPTACLES MOUNTED AT 5-FEET-6-INCHES OR LOWER SHALL BE TAMPER-RESISTANT TYPE, EXCEPT RECEPTACLES FOR FIXED APPLIANCES AND/OR EQUIPMENT.
7. COORDINATE LOCATION OF ALL OUTLETS, RECEPTACLES, AND SWITCHES WITH ARCHITECT PRIOR TO ROUGH-IN.

CONTROLLED RECEPTACLE DETAIL

NOTE:

SUBSCRIPT / SUPERSCRIPT "#,#C" INDICATES SPLIT WIRED RECEPTACLE CONTROLLED BY ROOM'S LIGHTING CONTROLS. REFER TO LIGHTING CONTROL SYSTEM DIAGRAM ON SHEET E002A FOR ADDITIONAL REQUIREMENTS. CONTROLLED PORTION OF RECEPTACLE SHALL BE IMPRINTED "CONTROLLED". REFER TO SYMBOLS LIST FOR ADDITIONAL INFORMATION.

BRANCH CIRCUIT GENERAL NOTES

1. FOR CLARITY, SOME BRANCH CIRCUIT CONDUIT & CONDUCTOR REQUIREMENTS HAVE NOT BEEN SHOWN ON PLANS FOR POWER BRANCH CIRCUITS. FOR POWER THROUGHOUT ALL SPACES, PROVIDE CONDUIT AND CONDUCTORS IN ACCORDANCE WITH ELECTRICAL SPECIFICATIONS. PROVIDE #12 CONDUCTORS UNLESS SPECIFICALLY NOTED OTHERWISE.

DIGALERT
DIAL TOLL FREE 1-800-422-4133
AT LEAST TWO DAYS BEFORE YOU DIG
UNDERGROUND SERVICE ALERT OF SOUTHERN CALIFORNIA

BASIS OF BEARINGS:

BEARINGS SHOWN HEREON ARE BASED ON THE CENTERLINE OF 162 ND STREET (FORMERLY MARKET STREET) BEING N 89° 55' 30" E SHOWN ON TRACT NO. 10901, M.B. 254/31-32

BENCHMARK:

THE CITY OF GARDENA BENCHMARK NO. 5D-15 ELEV. = 43.508

CONSULTANT:

FBA Engineering
Consulting Electrical Engineers
150 Paularino Avenue Suite A120
Costa Mesa, CA 92626
949.852.9995 • 949.852.1657 (fax)
fbaengr.com
FBA Job Number: 535050

REGISTERED PROFESSIONAL ENGINEER 10372 05-30-24 ELECTRICAL STATE OF CALIFORNIA

05/01/2023

PREPARED UNDER THE SUPERVISION OF:

RJM DESIGN GROUP
31591 Camino Capistrano
San Juan Capistrano, CA 92675
www.RJMdesigngroup.com
[949] 493-2650 fax
[949] 493-2600 phone

LICENSED LANDSCAPE ARCHITECT — Signature 04-30-2023 Renewal 2-28-2025 — STATE OF CALIFORNIA

REVISIONS			
NO.	DESCRIPTION	DATE	APPROVED
1	90% CD SUBMITTAL	12/15/2022	
2	100% CD SUBMITTAL	05/01/2023	
3	FINAL SUBMITTAL	10/02/2023	

CITY OF GARDENA
DEPARTMENT OF PUBLIC WORKS - ENGINEERING

BUILDING POWER & SIGNAL PLANS

COMMUNITY AQUATICS & SENIOR CENTER
E-3.01

	INITAL	DATE
DESIGNED BY	SR	11/14/2022
DRAWN BY	SR	09/26/2023
CHECKED BY	BZ	09/28/2023

APPROVED BY:

DATE

DIRECTOR OF PUBLIC WORKS

SHT. 156 OF 195 DWG. NO. S-2606

FBA Engineering / Plot Date: 9/26/2023 11:05 AM / Plotted by: Steve Roth / Drawing Location: I:\535\050\E-3.01_535050.dwg

REFERN: I:\535\050\E-3.01_535050.DWG
PLOT TIME: 9/26/2023 11:05:57 AM

PLAN NOTES

1. 3/4"C - 2#12, 1#12 GRD.TO RESPECTIVE INDOOR FANCOIL UNIT. SEE NOTE #8 ON E3.01 FOR CONTINUATION.
2. 3/4"C - 2#10, 1#10 GRD.
3. 3/4"C - 3#10, 1#10 GRD.
4. 3/4"C - 2#8, 1#8 GRD.

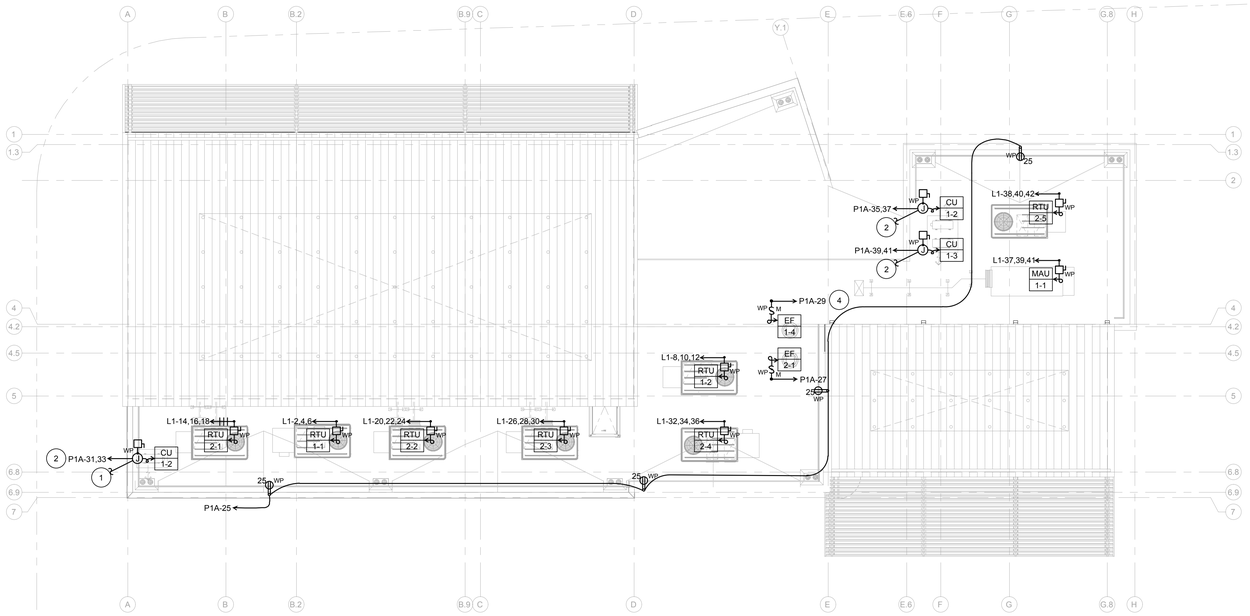

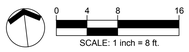

MECHANICAL EQUIPMENT GENERAL NOTES

1. VERIFY EXACT LOCATION OF MECHANICAL EQUIPMENT WITH MECHANICAL CONTRACTOR PRIOR TO INSTALLATION OF CONDUIT.
2. ALL EQUIPMENT, DEVICES, SAFETY SWITCH, JUNCTION BOXES CONNECTIONS, ETC. MOUNTED ON THE ROOF OR EXTERIOR SHALL BE WEATHERPROOF.
3. REFER TO MECHANICAL CONTROL DIAGRAMS FOR ALL SENSORS, TIME CLOCKS, RELAYS, TIMERS, STARTERS, LINE AND LOW VOLTAGE CONDUIT AND PROVIDE AS REQUIRED.
4. SAFETY SWITCHES SHALL BE HORSEPOWER RATED WITH CURRENT LIMITING FUSES, SIZED PER THE MANUFACTURER'S RECOMMENDATION. SWITCHES SHALL HAVE "RK-1" FUSE REJECTION CLIPS.
5. ELECTRICAL PLAN DO NOT INDICATE MECHANICAL AND PLUMBING EQUIPMENT CONTROL. REFER TO MECHANICAL AND PLUMBING PLANS AND SPECIFICATIONS AND PROVIDE ALL CONDUIT, WIRE, J-BOXES, OUTLET BOXES, RELAY SWITCHES, TIME SWITCHES, CONTROL CIRCUITS, ETC. REQUIRED FOR A COMPLETE AND OPERABLE MECHANICAL AND PLUMBING INSTALLATION. ALL WIRE SHALL BE INSTALLED IN CODE SIZED CONDUIT.
6. LOCATIONS OF SAFETY SWITCHES AND CONNECTIONS FOR MECHANICAL AND PLUMBING EQUIPMENT ARE SHOWN DIAGRAMMATICALLY. VERIFY ACTUAL LOCATIONS WITH EQUIPMENT SHOP DRAWINGS AND LOCATE SAFETY SWITCHES AS TO PROVIDE CODE REQUIRED CLEARANCES AND ACCESS. SAFETY SWITCHES LOCATED ON THE ROOF SHALL BE MOUNTED 30" MINIMUM ABOVE THE ROOF.

ROOF ELECTRICAL PLAN | SCALE: 1/4"=1'-0" | 1

DIGALERT
DIAL TOLL FREE
1-800-422-4133
AT LEAST TWO DAYS BEFORE YOU DIG
UNDERGROUND SERVICE ALERT OF SOUTHERN CALIFORNIA

BASIS OF BEARINGS:
BEARINGS SHOWN HEREON ARE BASED ON THE CENTERLINE OF 162 ND STREET (FORMERLY MARKET STREET) BEING N 89° 55' 30" E SHOWN ON TRACT NO. 10901, M.B. 254/31-32

BENCHMARK:
THE CITY OF GARDENA BENCHMARK NO. 5D-15 ELEV. = 43.508

CONSULTANT:
FBA Engineering
Consulting Electrical Engineers
150 Paularino Avenue Suite A120
Costa Mesa, CA 92626
949.852.9995 • 949.852.1657 (fax)
fbaengr.com
FBA Job Number: 535050

REGISTERED PROFESSIONAL ENGINEER — No. 10372 — 09-30-24 — ELECTRICAL — STATE OF CALIFORNIA
05/01/2023

PREPARED UNDER THE SUPERVISION OF:
RJM DESIGN GROUP
31591 Camino Capistrano
San Juan Capistrano, CA 92675
www.RJMdesigngroup.com
(949) 493-2690 fax
(949) 493-2600 phone

LICENSED LANDSCAPE ARCHITECT — Signature — 09-30-2023 Renewal Date — 6-26-2023 Date — STATE OF CALIFORNIA

REVISIONS			
NO.	DESCRIPTION	DATE	APPROVED
1	90% CD SUBMITTAL	12/15/2022	
2	100% CD SUBMITTAL	05/01/2023	
3	FINAL SUBMITTAL	10/02/2023	

CITY OF GARDENA
DEPARTMENT OF PUBLIC WORKS - ENGINEERING
ROOF ELECTRICAL PLAN
COMMUNITY AQUATICS & SENIOR CENTER
E-3.02

	INITAL	DATE
DESIGNED BY	SR	11/14/2022
DRAWN BY	SR	09/26/2023
CHECKED BY	BZ	09/28/2023

APPROVED BY:
DATE
DIRECTOR OF PUBLIC WORKS
SHT. 157 OF 195 DWG. NO. 5-2606

REF FILES: I:\535\050\E-3.02_535050.DWG
PLOT TIME: 9/26/2023 11:05:31 AM

FBA Engineering / Plot Date: 9/26/2023 11:05 AM / Plotted by: Steve Roth / Drawing Location: I:\535\050\E-3.02_535050.dwg

PLAN NOTES

1. ELECTRICAL INSTALLATION SHALL BE SUITABLE FOR A CORROSIVE ENVIRONMENT.

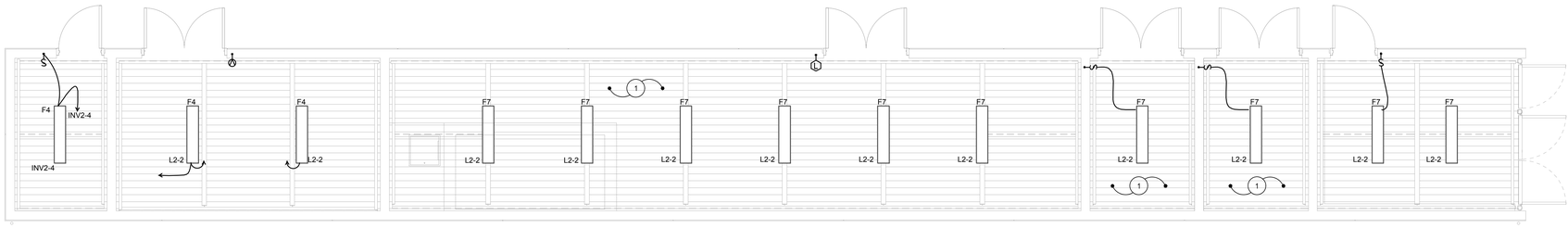

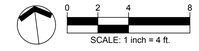

POOL BUILDING LIGHTING PLAN

SCALE: 1/4"=1'-0" | 2

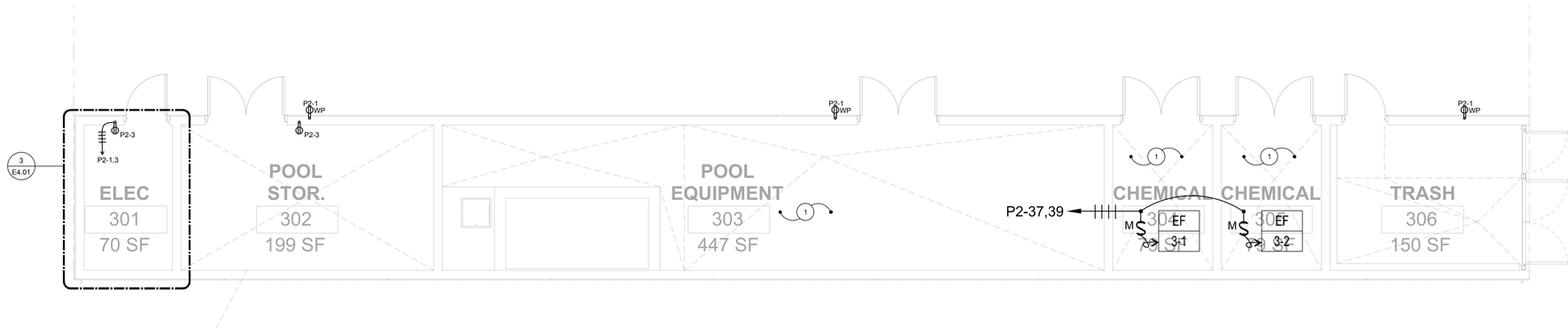



POOL BUILDING POWER & SIGNAL PLAN

SCALE: 1/4"=1'-0" | 1

GENERAL NOTES

1. REFER TO TYPICAL LIGHTING CONTROL DIAGRAMS & NOTES ON E0.02.
2. FOR CLARITY, BRANCH CIRCUIT CONDUIT & CONDUCTOR REQUIREMENTS HAVE NOT BEEN SHOWN ON PLANS FOR NORMAL & EMERGENCY LIGHTING. FOR LIGHTING THROUGHOUT ALL SPACES, PROVIDE CONDUIT AND CONDUCTORS IN ACCORDANCE WITH ELECTRICAL SPECIFICATION . PROVIDE #12 CONDUCTORS UNLESS SPECIFICALLY NOTED OTHERWISE.
3. FOR EMERGENCY LIGHTING "EM" POWER BRANCH CIRCUITS, PROVIDE CONDUIT AND CONDUCTORS, SEPARATE FROM NORMAL POWER LIGHTING BRANCH CIRCUIT CONDUIT & CONDUCTORS. REFER TO NOTE #2 ABOVE. EMERGENCY LIGHTING BRANCH CIRCUITS SHALL HAVE SEPARATE NEUTRAL CONDUCTOR FOR EACH PHASE CONDUCTOR, SHARED NEUTRAL IS NOT ALLOWED. PROVIDE A NON-CONTROLLED (NON-SWITCHED) HOT CONDUCTOR, FROM EMERGENCY POWER SOURCE, FOR CONNECTION TO EXIT SIGNS.
4. COORDINATE WITH POOL ELECTRICAL PLANS, SPECIFICATIONS AND CONTRACTOR FOR ADDITIONAL ITEMS THAT MAY IMPACT THE ELECTRICAL SCOPE OF WORK AND ELECTRICAL INSTALLATION.

POWER & SIGNAL GENERAL NOTES:

1. ALL WALL MOUNTED DEVICE HEIGHTS SHALL BE VERIFIED WITH ARCHITECTURAL ROOM ELEVATIONS PRIOR TO ROUGH-IN.
2. PENETRATIONS THROUGH FIRE RATED WALLS SHALL BE PROTECTED WITH AN APPROVED FIRE STOP SYSTEM EQUAL TO OR GREATER THAN THE RATING OF THE WALL BEING PENETRATED.
3. ALL DEVICES MOUNTED BACK-TO-BACK ON COMMON WALLS SHALL BE INSTALLED IN SEPARATE BOXES OFFSET 24-INCHES MINIMUM OR PROVIDED WITH PUTTY OR ANOTHER APPROVED SOUNDPROOF BACKING.
4. WHEN EXPOSED CEILING OR OPEN GRID CONDITIONS EXIST, CONTRACTOR SHALL PROVIDE:
   - A. ALL BRANCH CIRCUITS TO BE INSTALLED IN EMT.
   - B. ALL BRANCH CIRCUITS SHALL BE ROUTED PARALLEL TO BUILDING STRUCTURES AND RACKED NEATLY IN GROUPS OF MULTIPLE PATHWAYS.
   - C. ALL LOW VOLTAGE CABLES SHALL BE:
     1) INSTALLED IN EMT CONDUIT PATHWAYS OR
     2) INSTALLED NEATLY IN CABLE MANAGEMENT OPEN BASKET OR LADDER TYPE WIREWAY SUPPORTED INDEPENDENTLY FROM STRUCTURE ABOVE.

     EXPOSED LOW VOLTAGE CABLING IN OPEN TYPE CEILING APPLICATIONS INSTALLED ON D-RINGS, J-HOOKS OR SIMILAR APPARATUS WILL NOT BE ACCEPTED UNLESS APPROVED IN WRITING BY ARCHITECT/ENGINEER PRIOR TO ANY ROUGH-IN OR INSTALLATION. CONTRACTOR SHALL INCLUDE AN ALLOWANCE IN HIS BASE BID FOR THE INSTALLATION OF LOW VOLTAGE CABLES IN OPEN CEILING AS DESCRIBED.
5. EXPOSED CABLE/CONDUCTORS INSTALLED IN A PLENUM SPACE SHALL BE LISTED FOR SUCH ENVIRONMENT AND INSTALLATION SHALL CONFORM TO NEC OR CEC WHERE ADOPTED ARTICLE 300.22(C).
6. ALL RECEPTACLES MOUNTED AT 5-FEET-6-INCHES OR LOWER SHALL BE TAMPER-RESISTANT TYPE, EXCEPT RECEPTACLES FOR FIXED APPLIANCES AND/OR EQUIPMENT.
7. COORDINATE LOCATION OF ALL OUTLETS, RECEPTACLES, AND SWITCHES WITH ARCHITECT PRIOR TO ROUGH-IN.
8. GROUNDING AND BONDINGTERMINALS SHALL BE IDENTIFIED FOR USE IN WET AND CORROSIVE ENVIRONMENTS. FIELD-INSTALLED GROUNDING AND BONDING CONNECTIONS IN A DAMP, WET, OR CORROSIVE ENVIRONMENT SHALL BE COMPOSED OF COPPER, COPPER ALLOY, OR STAINLESS STEEL. THEY SHALL BE LISTED FOR DIRECT BURIAL USE." [680.7, 2019 CEC]

BRANCH CIRCUIT POWER GENERAL NOTES:

1. FOR CLARITY, SOME BRANCH CIRCUIT CONDUIT & CONDUCTOR REQUIREMENTS HAVE NOT BEEN SHOWN ON PLANS FOR POWER BRANCH CIRCUITS. FOR POWER THROUGHOUT ALL SPACES, PROVIDE CONDUIT AND CONDUCTORS IN ACCORDANCE WITH ELECTRICAL SPECIFICATIONS. PROVIDE #12 CONDUCTORS UNLESS SPECIFICALLY NOTED OTHERWISE.

SMOKE/FIRE DAMPER (SFD) GENERAL NOTES:

1. ELECTRICAL PLANS DO NOT SHOW ELECTRICAL REQUIREMENTS FOR SMOKE/FIRE DAMPERS (SFD). PROVIDE ALL CONDUIT, WIRE, J-BOXES, OUTLET BOXES, ETC. REQUIRED FOR A COMPLETE AND OPERABLE MECHANICAL INSTALLATION. CONNECT NO MORE THAN TEN DAMPERS PER CIRCUIT. REFER TO DETAIL 1/E-0.01.
2. REFER TO MECHANICAL PLANS FOR SMOKE/FIRE DAMPER LOCATIONS AND QUANTITIES.
3. PROVIDE QUANTITY OF AREA AND/OR DUCT SMOKE DETECTORS AS REQUIRED.
4. POWER FOR SMOKE/FIRE DAMPERS TO BE CONTROLLED BY FIRE ALARM RELAY OPERATED BY FIRE ALARM PANEL. CONTACT OF RELAY TO OPEN WITH FIRE ALARM CONDITION DISCONNECTING POWER FROM DAMPERS.

DIGALERT
DIAL TOLL FREE
1-800-422-4133
AT LEAST TWO DAYS BEFORE YOU DIG
UNDERGROUND SERVICE ALERT OF SOUTHERN CALIFORNIA

BASIS OF BEARINGS:

BEARINGS SHOWN HEREON ARE BASED ON THE CENTERLINE OF 162 ND STREET (FORMERLY MARKET STREET) BEING N 89° 55' 30" E SHOWN ON TRACT NO. 10901, M.B. 254/31-32

BENCHMARK:

THE CITY OF GARDENA BENCHMARK NO. 5D-15 ELEV. = 43.508

CONSULTANT:

FBA Engineering
Consulting Electrical Engineers
150 Paularino Avenue Suite A120
Costa Mesa, CA 92626
949.852.9995 • 949.852.1657 (fax)
fbaengr.com
FBA Job Number: 535050

REGISTERED PROFESSIONAL ENGINEER — No. 10372 — EXP. 09-30-24 — ELECTRICAL — STATE OF CALIFORNIA

05/01/2023

PREPARED UNDER THE SUPERVISION OF:

RJM DESIGN GROUP
31591 Camino Capistrano
San Juan Capistrano, CA 92675
www.RJMdesigngroup.com
[949] 493-2690 fax
[949] 493-2600 phone

REGISTERED LANDSCAPE ARCHITECT — STATE OF CALIFORNIA

REVISIONS			
NO.	DESCRIPTION	DATE	APPROVED
1	90% CD SUBMITTAL	12/15/2022	
2	100% CD SUBMITTAL	05/01/2023	
3	FINAL SUBMITTAL	10/02/2023	

CITY OF GARDENA
DEPARTMENT OF PUBLIC WORKS - ENGINEERING

POOL BUILDING LIGHTING, POWER & SIGNAL PLANS

COMMUNITY AQUATICS & SENIOR CENTER
E-3.03

	INITAL	DATE	APPROVED BY:
DESIGNED BY	SR	11/14/2022	
DRAWN BY	SR	09/26/2023	DATE DIRECTOR OF PUBLIC WORKS
CHECKED BY	BZ	09/28/2023	

SHT. 158 OF 195 DWG. NO. 5-2606

FBA Engineering / Plot Date: 9/26/2023 11:06 AM / Plotted by: Steve Roth / Drawing Location: I:\535\050\E-3.03_535050.dwg

REF FILES: I:\535\050\E-3.03_535050.DWG
PLOT TIME: 9/26/2023 11:06:02 AM

PLAN NOTES

1. LOCATE DEVICES IN ELEVATOR PIT/SHAFT PER ELEVATOR SUPPLIER REQUIREMENTS. LIGHT FIXTURE TO BE WALL MOUNTED, 2-FT, 4,000 LUMEN LED, VAPORTITE WITH HIGH IMPACT LENS AND WET LOCATION LISTED. METALUX #2VT2-LD5-4-DR-UNV-L840-CDI-WL OR EQUAL.
2. CONNECT TO ELEVATOR IN ACCORDANCE WITH THE ELEVATOR MANUFACTURER REQUIREMENTS. VERIFY EXACT LOCATION WITH ELEVATOR SUPPLIER.
3. CONNECT TO ELEVATOR FOR CAR EMERGENCY PHONE. VERIFY EXACT LOCATION WITH ELEVATOR SUPPLIER.
4. 120-VOLT, 20-AMP, SINGLE-PHASE, LOCKABLE, FUSED S.P.S.T. SWITCH FOR ELEVATOR CAR LIGHTS AND BLOWER WITH CONDUIT AND WIRE EXTENDED TO STUDS ON EACH ELEVATOR CONTROLLER. VERIFY EXACT LOCATION WITH ELEVATOR SUPPLIER.
5. HEAT DETECTOR IN ELEVATOR SHAFT LOCATED WITHIN 2'-0" PF SPRINKLER HEAD CONNECT TO FIRE ALARM SYSTEM AND TO SHUNT TRIP CIRCUIT BREAKER TO SHUT-OFF POWER TO ELEVATOR WHEN DETECTOR IS ACTIVATED. PROVIDE ACCESS FROM OUTSIDE SHAFT TO SERVICE DETECTOR.
6. HEAT DETECTOR IN ELEVATOR MACHINE ROOM LOCATED WITHIN 2'-0" OF EVERY SPRINKLER HEAD. VERIFY LOCATIONS AND QUANTITIES WITH FIRE PROTECTION DRAWINGS. CONNECT TO FIRE ALARM SYSTEM AND TO SHUNT TRIP CIRCUIT BREAKER TO SHUT-OFF POWER TO ELEVATOR WHEN DETECTOR IS ACTIVATED.
7. SMOKE DETECTOR LOCATED IN ELEVATOR SHAFT FOR ELEVATOR RECALL. PROVIDE ACCESS TO DETECTOR FROM OUTSIDE SHAFT.
8. REFER TO SINGLE LINE DIAGRAM, SHEET E-0.03 FOR FEEDER REQUIREMENTS.
9. 3/4"C.O. TO TELEPHONE BACKBOARD IN 2nd FLOOR IT CLOSET.
10. UP TO LIGHT FIXTURE IN ROOM. REFER TO E-2.01 FOR CONTINUATION.
11. DOOR SHALL OPEN IN THE DIRECTION OF EGRESS FROM ROOM AND BE PROVIDED WITH PANIC HARDWARE.
12. 3"H. CONCRETE HOUSEKEEPING PAD EXTENDING 3" BEYOND EQUIPMENT FOOTPRINT.
13. 3/4"-1#6 TO UFER GROUND BUS. SEE DETAIL 1/E-0.03.
14. 3/4"-1#6 TO POOL BUILDING GROUND ELECTRODE.
15. CONNECT AS REQUIRED TO TRAP PRIMER. VERIFY LOCATION & REQUIREMENTS WITH PLUMBING.

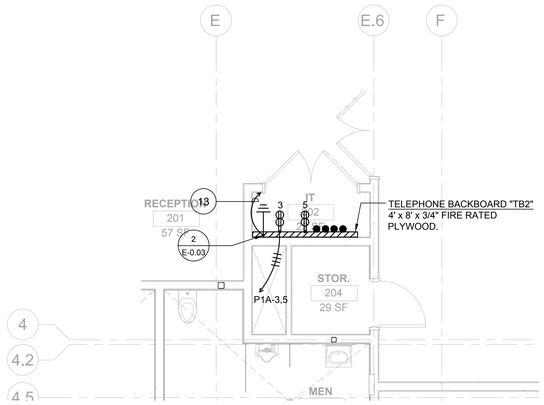

ENLARGED ELECTRICAL IT ROOM PLAN | SCALE: 1/4"=1'-0" | 4

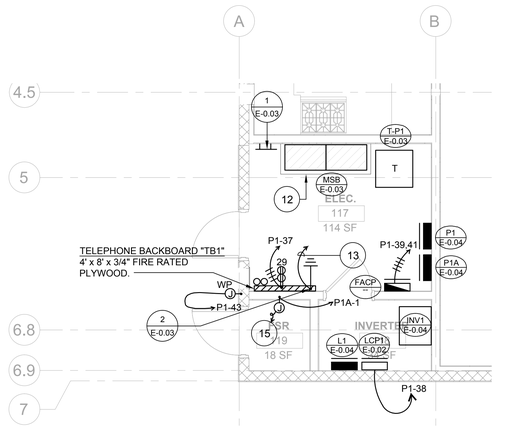

ENLARGED ELECTRICAL ROOM PLAN | SCALE: 1/4"=1'-0" | 1

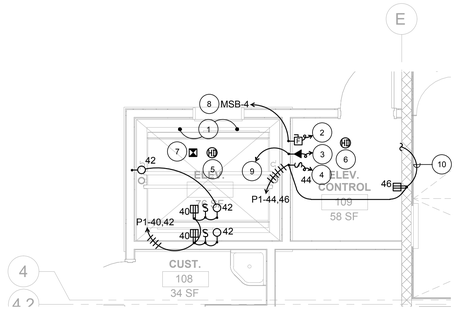

ENLARGED ELEVATOR DETAIL | SCALE: 1/4"=1'-0" | 2

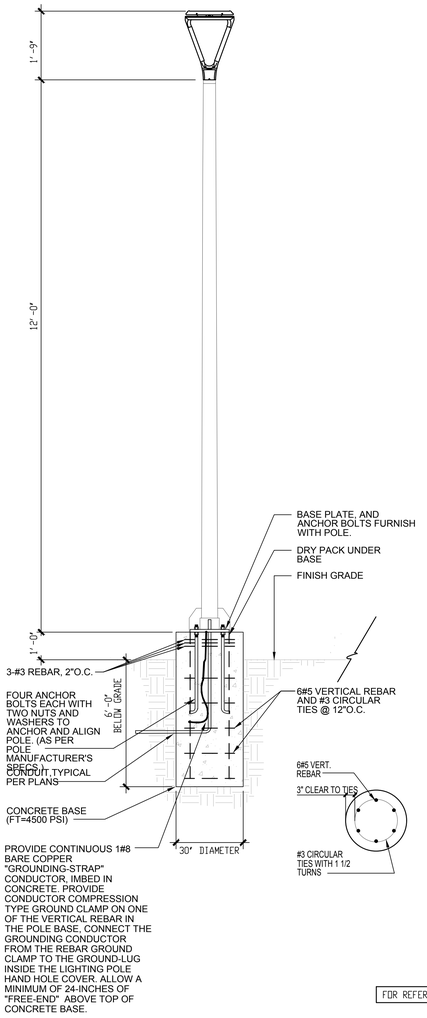

FIXTURE TYPE "S3" POLE BASE DETAIL | SCALE: NONE | 6

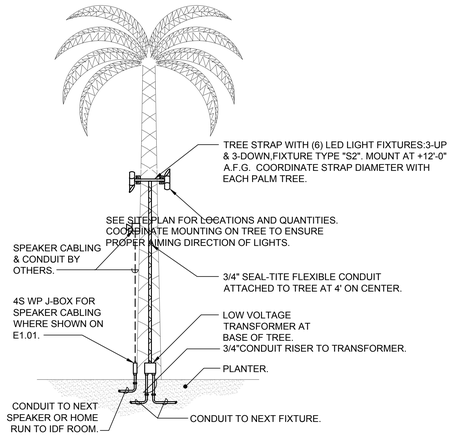

FIXTURE TYPE "S2" MOUNTING DETAIL | SCALE: NONE | 5

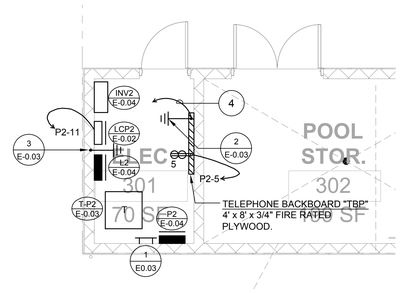

POOL BLDG. ENLARGED ELECTRICAL ROOM PLAN | SCALE: 1/4"=1'-0" | 3

DIGALERT — DIAL TOLL FREE 1-800-422-4133 AT LEAST TWO DAYS BEFORE YOU DIG
UNDERGROUND SERVICE ALERT OF SOUTHERN CALIFORNIA

BASIS OF BEARINGS:
BEARINGS SHOWN HEREON ARE BASED ON THE CENTERLINE OF 162 ND STREET (FORMERLY MARKET STREET) BEING N 89° 55' 30" E SHOWN ON TRACT NO. 10901, M.B. 254/31-32

BENCHMARK:
THE CITY OF GARDENA BENCHMARK NO. 5D-15 ELEV. = 43.508

CONSULTANT:
FBA Engineering
Consulting Electrical Engineers
150 Paularino Avenue Suite A120
Costa Mesa, CA 92626
949.852.9995 • 949.852.1657 (fax)
fbaengr.com
FBA Job Number: 535050

REGISTERED PROFESSIONAL ENGINEER — No. 10372 — 09-30-24 — ELECTRICAL — STATE OF CALIFORNIA
05/01/2023

PREPARED UNDER THE SUPERVISION OF:
RJM DESIGN GROUP
31591 Camino Capistrano
San Juan Capistrano, CA 92675
www.RJMdesigngroup.com
[949] 493-2690 fax
[949] 493-2600 phone

REGISTERED LANDSCAPE ARCHITECT — STATE OF CALIFORNIA

REVISIONS

NO.	DESCRIPTION	DATE	APPROVED
1	90% CD SUBMITTAL	12/15/2022	
2	100% CD SUBMITTAL	06/01/2023	
3	FINAL SUBMITTAL	10/02/2023	

CITY OF GARDENA
DEPARTMENT OF PUBLIC WORKS - ENGINEERING
ELECTRICAL DETAILS
COMMUNITY AQUATICS & SENIOR CENTER
E-4.01

	INITIAL	DATE
DESIGNED BY	SR	11/14/2022
DRAWN BY	SR	09/26/2023
CHECKED BY	BZ	09/28/2023

APPROVED BY:
DATE
DIRECTOR OF PUBLIC WORKS
SHT. 159 OF 195 DWG. NO. 5-2606

FBA Engineering / Plot Date: 9/26/2023 11:06 AM / Plotted by: Steve Roth / Drawing Location: I:\535\050\E-4.01_535050.dwg
XREF PATH: I:\535\050\ E-4.01_535050.DWG
PLOT TIME: 9/26/2023 11:06:05 AM

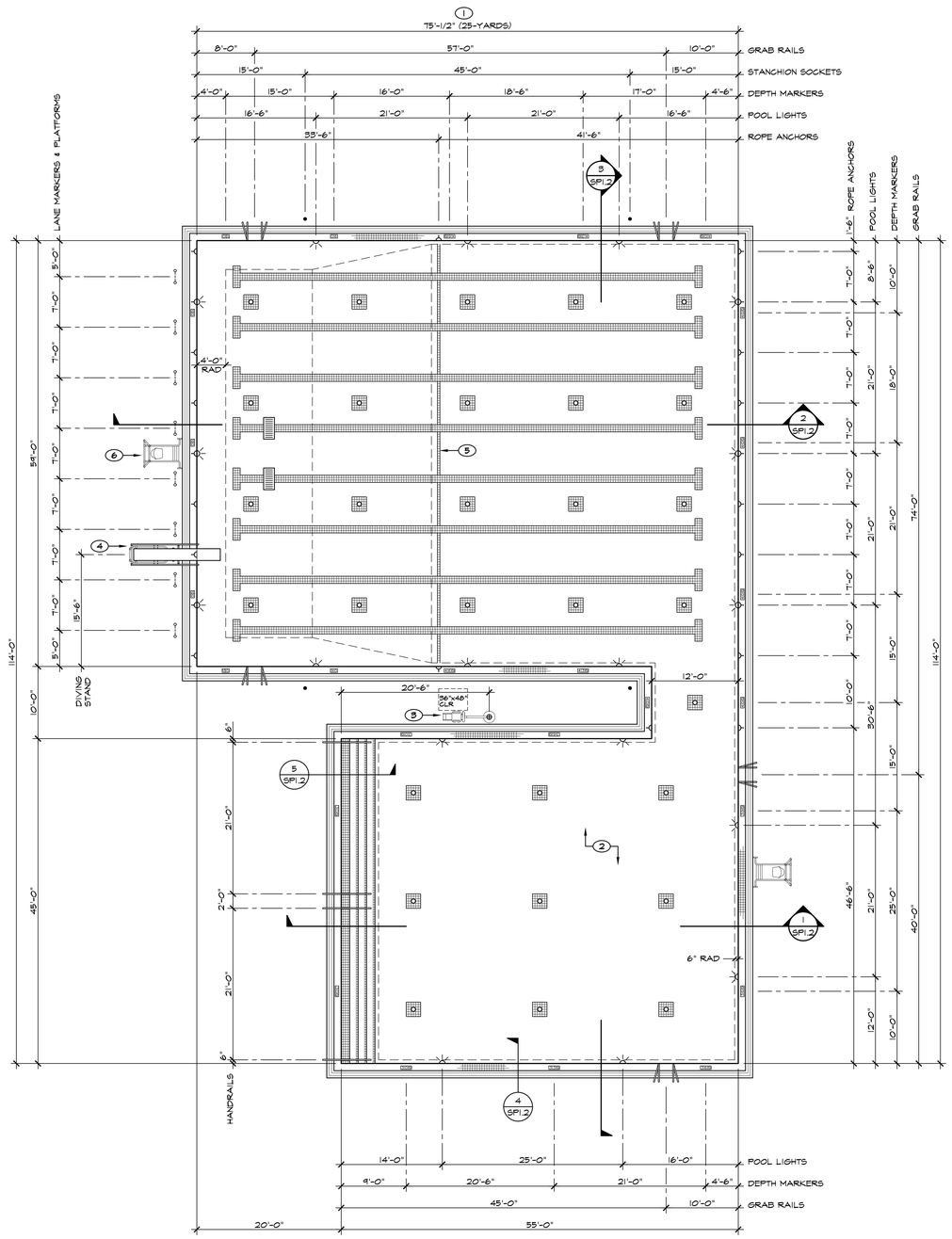

SWIMMING POOL PLAN

SCALE: 1/8" = 1'-0"

NORTH

KEYED NOTES

1. FINISHED DIMENSION OF POOL SHALL BE 75.04' MIN & 75.08' MAX. THIS TOLERANCE APPLIES TO ALL POINTS ON THE TURNING WALL FROM WATERLINE TO 5'-0" BELOW.
2. 1/2" MIN WHITE PLASTER FINISH
3. DISABLED ACCESS LIFT, SEE 5/SP2.1
4. 3/4 METER DIVING STAND, SEE 10/SP2.1
5. 4" WIDE SLIP-RESISTANT RED SLOPE BREAK TILE BAND
6. PORTABLE LIFEGUARD CHAIR (TYP 2)

GENERAL NOTES

1. SET GUTTER CAP TILE LEVEL WITHIN A TOLERANCE OF ± 0.05" AROUND PERIMETER OF POOL.
2. DIMENSIONS ARE TYP FOR OPPOSITE SIDE OF POOL UNO.
3. SEE SHEET SP4.1 FOR FLOOR INLET & MAIN DRAIN DIMENSIONS.
4. SEE SHEET SP4.1 FOR SAFETY SIGNS & SAFETY EQUIPMENT LOCATIONS.

SYMBOLS

SYMBOL	DESCRIPTION	REFERENCE
	DEPTH MARKER (TYP 26)	1/SP2.1
	ROPE ANCHOR (TYP 22)	3/SP2.1
	GRAB RAILS (TYP 5 PR)	4/SP2.1
⊕	DISABLED LIFT SOCKET	5/SP2.1
	STARTING PLATFORM ANCHOR (TYP 8)	6/SP2.1
•	STANCHION SOCKET (TYP 4)	7/SP2.1
	POOL LIGHT (TYP 18)	8/SP2.1
	BLACK TILE LANE MARKER & TURN TARGETS (TYP 8)	9/SP2.1
	FLOOR INLET W/ WHITE TILE (TYP 30)	1/SP4.3
	MAIN DRAIN GRATE (TYP 2)	2/SP4.3

DECK | POOL

POOL DATA

1. SURFACE AREA = 7,020 SQ FT
2. PERIMETER = 464 FT
3. VOLUME = 264,000 GALLONS
4. TURNOVER RATE = 850 GPM (5.2 HOURS)
5. FILTER AREA = 700 SQ FT (1.2 GPM/SQ FT)
6. MAIN DRAIN CAPACITY = 2,480 GPM
7. 10" SUCTION PIPE VELOCITY = 3.8 FT/SEC
8. 8" RETURN PIPE VELOCITY = 5.9 FT/SEC
9. SURGE CAPACITY = 7,200 GALLONS (5,100 GALLONS IN CHAMBER & 2,100 IN GUTTER)
10. UNDERWATER LIGHT LEVEL = 1.3 WATTS / SQ FT
11. BATHER LOAD = 351 PEOPLE

DIGALERT
DIAL TOLL FREE
1-800-422-4133
AT LEAST TWO DAYS BEFORE YOU DIG
UNDERGROUND SERVICE ALERT OF SOUTHERN CALIFORNIA

BASIS OF BEARINGS:

BEARINGS SHOWN HEREON ARE BASED ON THE CENTERLINE OF 162 ND STREET (FORMERLY MARKET STREET) BEING N 89° 55' 30" E SHOWN ON TRACT NO. 10901, M.B. 254/31-32

BENCHMARK:

THE CITY OF GARDENA BENCHMARK NO. SD-15 ELEV. = 43.508

CONSULTANT:

JONES & MADHAVAN
ARCHITECTURE
ENGINEERING
100 EAST THOUSAND OAKS BOULEVARD, SUITE 211
THOUSAND OAKS, CALIFORNIA 91360
TEL 805.777.8449 • FAX 805.777.8489

LICENSED ARCHITECT · MANOHAR M. MADHAVAN · C-25855 · REN. 11-30-25 · STATE OF CALIFORNIA

PREPARED UNDER THE SUPERVISION OF:

RJM DESIGN GROUP
31591 Camino Capistrano
San Juan Capistrano, CA 92675
www.RJMdesigngroup.com
(949) 493-2690 fax
(949) 493-2600 phone

LICENSED LANDSCAPE ARCHITECT · STATE OF CALIFORNIA

REVISIONS

NO.	DESCRIPTION	DATE	APPROVED
1	90% CD SUBMITTAL	12/15/2022	
2	100% CD SUBMITTAL	05/01/2023	
3	FINAL SUBMITTAL	10/02/2023	

CITY OF GARDENA
DEPARTMENT OF PUBLIC WORKS - ENGINEERING

SWIMMING POOL PLAN

COMMUNITY AQUATICS & SENIOR CENTER

SP1.1

	INITIAL	DATE
DESIGNED BY	NM	10/02/2023
DRAWN BY	JMAE	10/02/2023
CHECKED BY	DJ	10/02/2023

APPROVED BY:

DATE DIRECTOR OF PUBLIC WORKS

SHT. 160 OF 195 DWG. NO. 5-2606

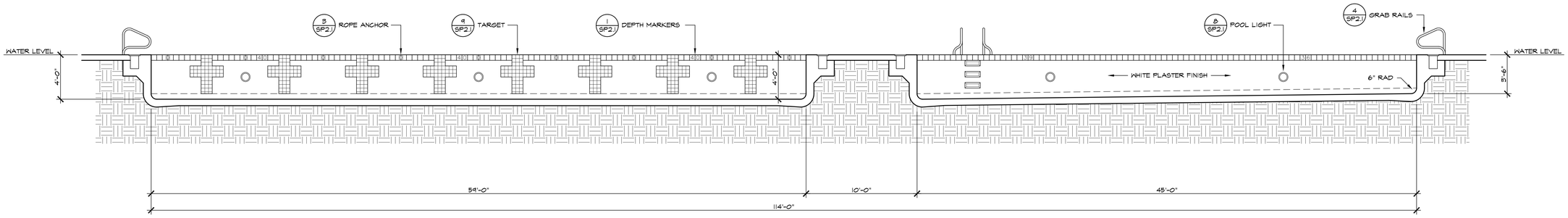

SWIMMING POOL SECTION

SCALE: 1/4" = 1'-0"

3

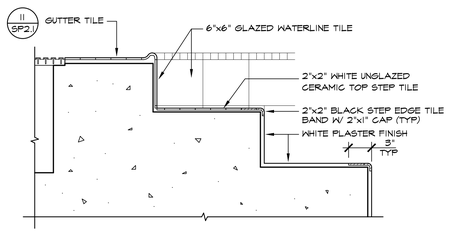

STAIR TILE

SCALE: 1 1/2" = 1'-0"

6

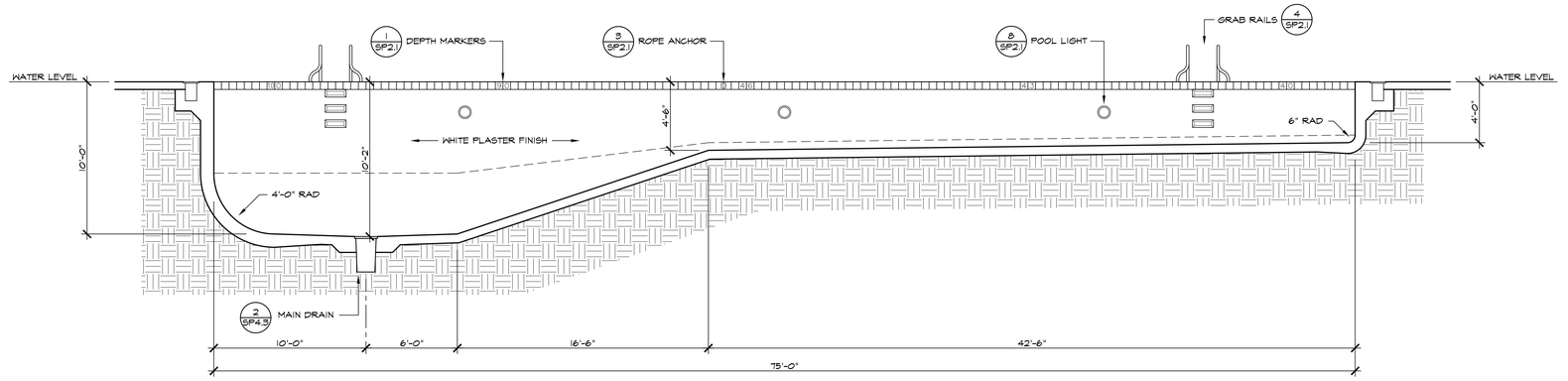

SWIMMING POOL SECTION

SCALE: 1/4" = 1'-0"

2

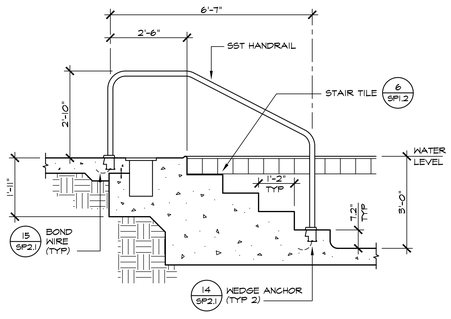

STAIR SECTION

SCALE: 1/2" = 1'-0"

5

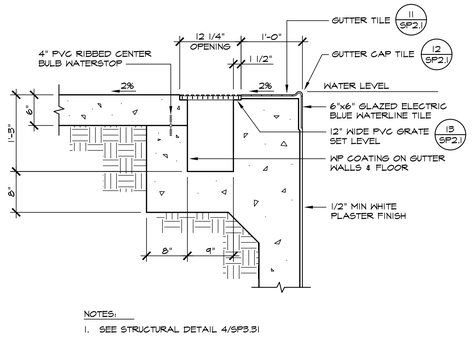

NOTES:

1. SEE STRUCTURAL DETAIL 4/SP3.31

GUTTER SECTION

SCALE: 1" = 1'-0"

4

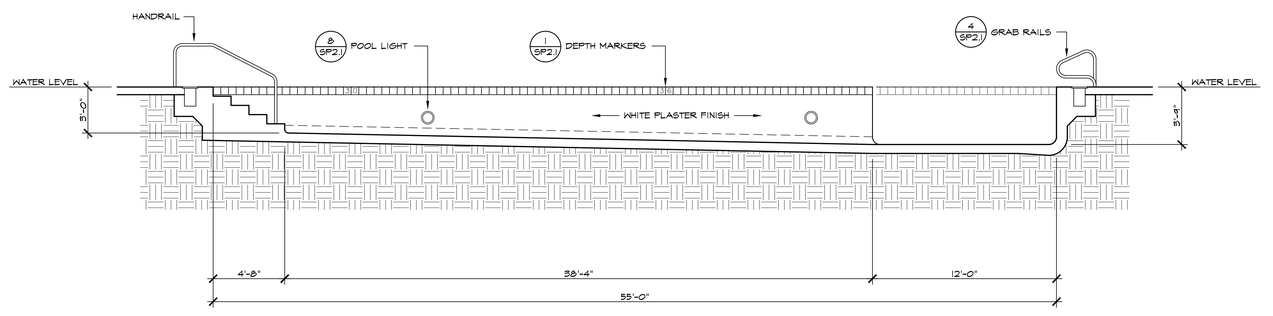

SWIMMING POOL SECTION

SCALE: 1/4" = 1'-0"

1

DIGALERT

DIAL TOLL FREE
1-800-422-4133
AT LEAST TWO DAYS BEFORE YOU DIG

UNDERGROUND SERVICE ALERT OF SOUTHERN CALIFORNIA

BASIS OF BEARINGS:

BEARINGS SHOWN HEREON ARE BASED ON THE CENTERLINE OF 162 ND STREET (FORMERLY MARKET STREET) BEING N 89° 55' 30" E SHOWN ON TRACT NO. 10901, M.B. 254/31-32

BENCHMARK:

THE CITY OF GARDENA BENCHMARK NO. 5D-15 ELEV. = 43.508

CONSULTANT:

JONES & MADHAVAN ARCHITECTURE ENGINEERING

100 EAST THOUSAND OAKS BOULEVARD, SUITE 211
THOUSAND OAKS, CALIFORNIA 91360
TEL 805.777.8449 • FAX 805.777.8489

LICENSED ARCHITECT NARENDRA M. MADHAVAN C-25855 REN. 11-30-25 STATE OF CALIFORNIA

PREPARED UNDER THE SUPERVISION OF:

RJM DESIGN GROUP

31591 Camino Capistrano
San Juan Capistrano, CA 92675
www.RJMdesigngroup.com
[949] 493-2690 fax
[949] 493-2600 phone

LICENSED LANDSCAPE ARCHITECT DAVID JUNG No. 6140 REN. 01-31-2025 STATE OF CALIFORNIA

REVISIONS			
NO.	DESCRIPTION	DATE	APPROVED
1	90% CD SUBMITTAL	12/15/2022	
2	100% CD SUBMITTAL	05/01/2023	
3	FINAL SUBMITTAL	10/02/2023	

CITY OF GARDENA

DEPARTMENT OF PUBLIC WORKS - ENGINEERING

SWIMMING POOL SECTIONS

COMMUNITY AQUATICS & SENIOR CENTER

SP1.2

	INITIAL	DATE
DESIGNED BY	NM	10/02/2023
DRAWN BY	JMAE	10/02/2023
CHECKED BY	DJ	10/02/2023

APPROVED BY:

DATE DIRECTOR OF PUBLIC WORKS

SHT. 161 OF 195 DWG. NO. S-2606

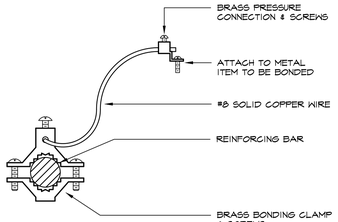

BOND WIRE 15

SCALE: NONE

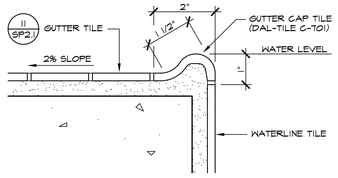

GUTTER CAP TILE 12

SCALE: HALF SIZE

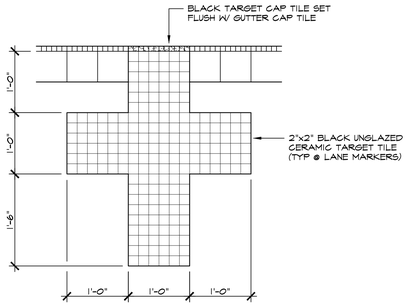

TARGET 9

SCALE: 1" = 1'-0"

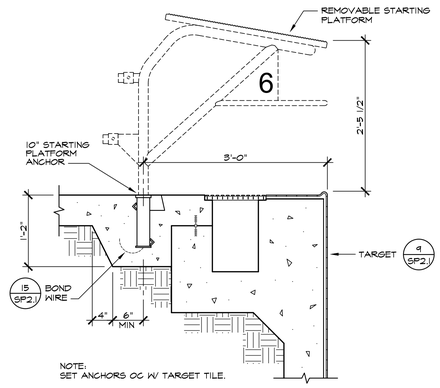

PLATFORM ANCHOR 6

SCALE: 1" = 1'-0"

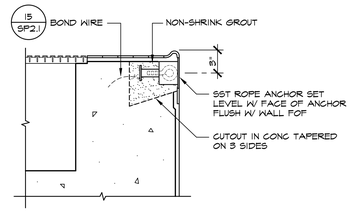

ROPE ANCHOR 3

SCALE: 1 1/2" = 1'-0"

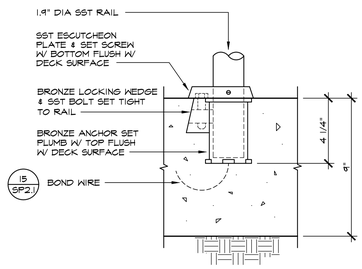

WEDGE ANCHOR 14

SCALE: 3" = 1'-0"

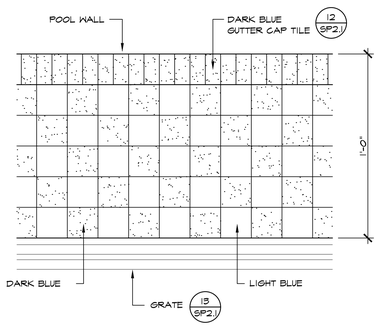

GUTTER TILE 11

SCALE: 3" = 1'-0"

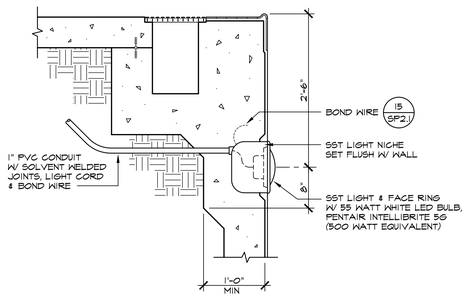

POOL LIGHT 8

SCALE: 1" = 1'-0"

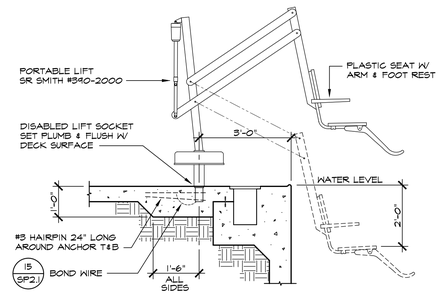

DISABLED LIFT 5

SCALE: 1/2" = 1'-0"

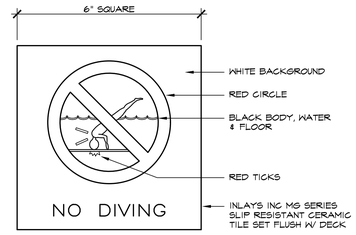

NO DIVING GRAPHIC 2

SCALE: HALF SIZE

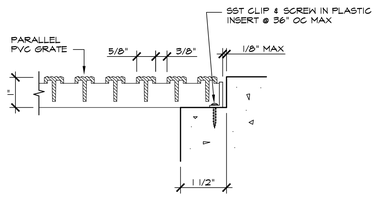

GUTTER GRATE 13

SCALE: HALF SIZE

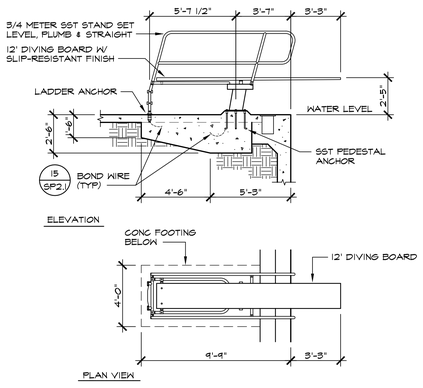

DIVING STAND 10

SCALE: 1/4" = 1'-0"

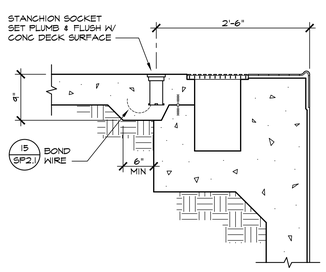

STANCHION SOCKET 7

SCALE: 1" = 1'-0"

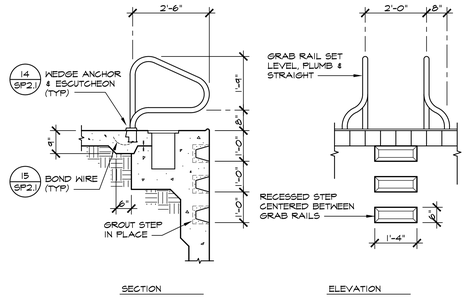

GRAB RAILS 4

SCALE: 1/2" = 1'-0"

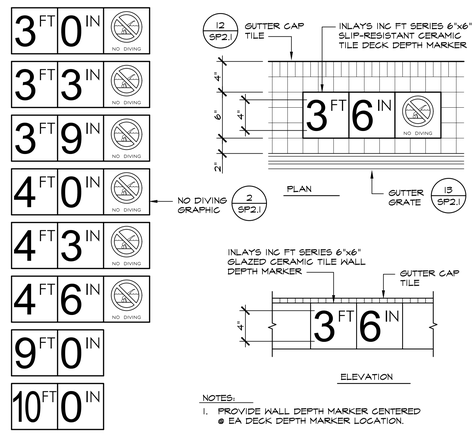

DEPTH MARKERS 1

SCALE: 1 1/2" = 1'-0"

DIGALERT
DIAL TOLL FREE
1-800-422-4133
AT LEAST TWO DAYS BEFORE YOU DIG
UNDERGROUND SERVICE ALERT OF SOUTHERN CALIFORNIA

BASIS OF BEARINGS:

BEARINGS SHOWN HEREON ARE BASED ON THE CENTERLINE OF 162 ND STREET (FORMERLY MARKET STREET) BEING N 89° 55' 30" E SHOWN ON TRACT NO. 10901, M.B. 254/31-32

BENCHMARK:

THE CITY OF GARDENA BENCHMARK NO. SD-15 ELEV. = 43.508

CONSULTANT:

JONES & MADHAVAN ARCHITECTURE ENGINEERING
100 EAST THOUSAND OAKS BOULEVARD, SUITE 211
THOUSAND OAKS, CALIFORNIA 91360
TEL 805.777.8449 - FAX 805.777.8489

LICENSED ARCHITECT MADHAVAN M. MADHAVAN C-25855 REN. 11-30-25 STATE OF CALIFORNIA

PREPARED UNDER THE SUPERVISION OF:

RJM DESIGN GROUP
31591 Camino Capistrano
San Juan Capistrano, CA 92675
www.RJMdesigngroup.com
(949) 493-2690 fax
(949) 493-2600 phone

LICENSED LANDSCAPE ARCHITECT STATE OF CALIFORNIA 07-31-2023 07-31-2025

REVISIONS

NO.	DESCRIPTION	DATE	APPROVED
1	90% CD SUBMITTAL	12/15/2022	
2	100% CD SUBMITTAL	05/01/2023	
3	FINAL SUBMITTAL	10/02/2023	

CITY OF GARDENA
DEPARTMENT OF PUBLIC WORKS - ENGINEERING

SWIMMING POOL DETAILS

COMMUNITY AQUATICS & SENIOR CENTER

SP2.1

	INITIAL	DATE	APPROVED BY:
DESIGNED BY	NM	10/02/2023	
DRAWN BY	JMAE	10/02/2023	DATE
CHECKED BY	DJ	10/02/2023	DIRECTOR OF PUBLIC WORKS

SHT. 162 OF 195 DWG. NO. 5-2606

ABBREVIATIONS

AB	ANCHOR BOLT
ADDL	ADDITIONAL
ALT	ALTERNATE
APA	AMERICAN PLYWOOD ASSOCIATION
ARCH	ARCHITECTURAL
AWPA	AMERICAN WOOD PRESERVERS ASSOCIATION
B	BOTTOM
BLKG	BLOCKING
BM	BEAM
BN	BOUNDARY NAIL
BOF	BOTTOM OF FOOTING
BRG	BEARING
BTN	BETWEEN
BOT	BOTTOM
CBC	CALIFORNIA BUILDING CODE
CIP	CAST-IN-PLACE
CJ	CEILING JOIST
CL	CENTER LINE
CLR	CLEAR
COL	COLUMN
CONC	CONCRETE
CONN	CONNECTION
CONST	CONSTRUCTION
CONT	CONTINUOUS
DBL	DOUBLE
DF	DOUGLAS FIR/LARCH
DL	DEAD LOAD
DP	DEEP
DIA	DIAMETER
DIM	DIMENSION
DO	DITTO (REPEAT)
DWG	DRAWING
DWL	DOWEL
E	EXISTING
EA	EACH
EF	EACH FACE
EL	ELEVATION
ELEC	ELECTRICAL
ELEV	ELEVATOR
EMBED	EMBEDMENT
EN	EDGE NAIL
EQ	EQUAL OR EQUIVALENT
ES	EACH SIDE
EW	EACH WAY
EXT	EXTERIOR
FA	FRAMING/SHEAR CONNECTOR
FDN	FOUNDATION
FF	FINISHED FLOOR
FJ	FLOOR JOIST
FOC	FACE OF CONCRETE
FOM	FACE OF MASONRY
FOS	FACE OF STUD
FRM	FRAMING
FRT	FIRE-RETARDANT TREATED
FS	FAR SIDE
FTG	FOOTING
GA	GAUGE
GALV	GALVANIZED
GLB	GLUED LAMINATED BEAM
GR	GRADE
H	HORIZONTAL
HDR	HEADER
HGR	HANGER
HT	HEIGHT
HORIZ	HORIZONTAL
HSH	HORIZONTALLY SLOTTED HOLES
ID	INSIDE DIAMETER
IF	INSIDE FACE
I JST	I-JOIST
INT	INTERIOR
IOR	INSPECTOR OF RECORD
JST	JOIST
JT	JOINT
LDGR	LEDGER
LL	LIVE LOAD
LSL	TIMBERSTRAND
LTWT	LIGHT WEIGHT
LVL	MICROLLAM
MATL	MATERIAL
MAX	MAXIMUM
MB	MACHINE BOLT
MECH	MECHANICAL
MFR	MANUFACTURER
MIN	MINIMUM
MISC	MISCELLANEOUS
MTL	METAL
NIC	NOT IN CONTRACT
NO	NUMBER
NS	NEAR SIDE
NTS	NOT TO SCALE
OC	ON CENTER
OD	OUTSIDE DIAMETER
OF	OUTSIDE FACE
OH	OPPOSITE HAND
OPNG	OPENING
OPP	OPPOSITE
ORIG	ORIGINAL
OSB	ORIENTED STRAND BOARD
PL	PLATE
PLCS	PLACES
PLYWD	PLYWOOD
PSL	PARALLAM
PT	PRESERVATIVE TREATED
PW	PLATE WASHER
R	RADIUS
REF	REFERENCE
REINF	REINFORCEMENT
REQD	REQUIRED
RF	ROOF
RT	RAFTER CROSSTIE
RR	ROOF RAFTERS
RW	RETAINING WALL
SCHED	SCHEDULE
SECT	SECTION
SEOR	STRUCTURAL ENGINEER OF RECORD
SEP	SEPARATION
SIM	SIMILAR
SN	SHEAR NAIL
SOG	SLAB ON GRADE
SP	SEE PLAN
SPEC	SPECIFICATION
SQ	SQUARE
STD	STANDARD
STGR	STAGGER
STIFF	STIFFENERS
STR	STRUCTURAL
STR I	STRUCTURAL I
T	TOP
T&B	TOP & BOTTOM
T&G	TONGUE & GROOVE
THK	THICKNESS/THICK
THR	THREADED
TN	TOENAIL
TOP	TOP OF PARAPET
TOS	TOP OF SLAB
TOW	TOP OF WALL
TYP	TYPICAL
UBC	UNIFORM BUILDING CODE
UNO	UNLESS NOTED OTHERWISE
V	VERTICAL
VERT	VERTICAL
VSH	VERTICAL SLOTTED HOLES
WD	WOOD
WP	WATERPROOF OR WORK POINT
WPJ	WEAKENED PLANE JOINT
WT	WEIGHT
WWF	WELDED WIRE FABRIC
W/	WITH
W/O	WITH OUT
WO	WHERE OCCURS
XS	EXTRA STRONG (STEEL PIPE)
XXS	DOUBLE EXTRA STRONG (STEEL PIPE)

GENERAL:

THE STRUCTURAL CONTRACT DRAWINGS AND SPECIFICATIONS REPRESENT THE FINISHED STRUCTURE. THEY DO NOT INDICATE THE METHOD OF CONSTRUCTION. THE STRUCTURE IS DESIGNED TO BE A STABLE UNIT AS A COMPLETED WHOLE. IT IS THE CONTRACTOR'S RESPONSIBILITY TO DESIGN, ERECT AND INSPECT TEMPORARY SHORES, BRACES, ETC. TO SUPPORT THE STRUCTURE AGAINST ALL ANTICIPATED LOADS INCLUDING GRAVITY, WIND AND LATERAL EARTH PRESSURE UNTIL ITS COMPLETION. OBSERVATION VISITS TO THE SITE BY THE STRUCTURAL ENGINEER SHALL NOT INCLUDE INSPECTION OF THESE METHODS OF CONSTRUCTION. CONSTRUCTION MATERIAL SHALL BE PLACED ON FRAMED FLOORS AND ROOFS SUCH THAT THE DESIGN LIVE LOADS ARE NOT EXCEEDED.

THE CONTRACTOR SHALL VERIFY ALL DIMENSIONS, ELEVATIONS AND SITE CONDITIONS PRIOR TO STARTING CONSTRUCTION. RESOLVE ANY DISCREPANCY WITH THE ARCHITECT.

WORKMANSHIP AND MATERIALS SHALL COMPLY WITH THE 2019 CALIFORNIA BUILDING CODE AND ALL OTHER APPLICABLE REGULATIONS.

NOTES AND DETAILS ON THE DRAWINGS TAKE PRECEDENCE OVER THE GENERAL STRUCTURAL NOTES AND TYPICAL DETAILS. "TYPICAL" DETAILS ARE NOT FLAGGED ON THE DRAWINGS, BUT APPLY UNLESS NOTED OTHERWISE.

APPROVED FABRICATORS SHALL BE LICENSED BY GARDENA CITY BUILDING DEPARTMENT.

COORDINATION:

ALL DRAWINGS ARE CONSIDERED TO BE PART OF THE CONTRACT DOCUMENTS. THE CONTRACTOR SHALL BE RESPONSIBLE FOR COORDINATING THE DRAWINGS AND SPECIFICATIONS AMONG THE SUBCONTRACTORS PRIOR TO START OF CONSTRUCTION. ANY DISCREPANCIES THAT ARE FOUND SHALL BE BROUGHT TO THE ATTENTION OF THE ARCHITECT PRIOR TO START OF CONSTRUCTION. ANY WORK PERFORMED IN CONFLICT WITH THE CONTRACT DOCUMENTS OR ANY CODE REQUIREMENTS SHALL BE CORRECTED BY THE CONTRACTOR AT HIS OWN EXPENSE AND AT NO EXPENSE TO THE OWNER OR ARCHITECT.

COORDINATION SHALL INCLUDE, BUT NOT BE LIMITED TO, VERIFYING THE LOCATION AND WEIGHT OF ALL MECHANICAL AND ELECTRICAL EQUIPMENT AS WELL AS THE SIZE AND LOCATION OF ALL MECHANICAL OPENINGS IN ROOFS, FLOORS AND WALLS. UNLESS OTHERWISE NOTED ON THE DRAWINGS, DO NOT PENETRATE ANY STRUCTURAL ELEMENTS SUCH AS BEAMS, COLUMNS, WALLS, SLABS, ETC. WITHOUT PRIOR WRITTEN APPROVAL OF THE STRUCTURAL ENGINEER THROUGH THE ARCHITECT.

COORDINATION SHALL INCLUDE, BUT NOT BE LIMITED TO, DETERMINING THE LOCATION OF ALL EXISTING UTILITY LINES THAT MAY INTERFERE WITH THE INSTALLATION OF THE NEW STRUCTURAL ELEMENTS. THE CONTRACTOR SHALL INFORM THE OWNER IF INTERFERENCE IS ENCOUNTERED. THE OWNER WILL DETERMINE IF THE LINES ARE TO BE REMOVED OR RELOCATED.

SHOP DRAWINGS:

SHOP DRAWING SUBMITTAL TO THE ENGINEER ARE REQUIRED FOR ALL STRUCTURAL WORK, UNLESS OTHERWISE AGREED TO BY THE ARCHITECT/ENGINEER. NO WORK SHALL PROCEED WITHOUT THE REVIEW AND APPROVAL OF SHOP/ERECTION/LAYOUT DRAWINGS BY THE ARCHITECT AND ENGINEER. ALL SUBMITTALS SHALL BE MADE IN A TIMELY MANNER ALLOWING ADEQUATE TIME AS NEEDED BY THE ARCHITECT AND ENGINEER FOR REVIEW.

THE CONTRACTOR SHALL REVIEW AND APPROVE ALL SHOP DRAWINGS PRIOR TO ENGINEERING REVIEW. SUBMISSIONS FOR ENGINEERING REVIEW SHALL INCLUDE A REPRODUCIBLE AND ONE COPY; REPRODUCIBLE WILL BE MARKED AND RETURNED.

INSPECTIONS:

THE OWNER SHALL EMPLOY AN INSPECTOR TO PROVIDE INSPECTION PER CBC SECTION 1701 AND LOCAL CODES. ALL SPECIAL INSPECTORS SHALL BE APPROVED BY GARDENA CITY BUILDING DEPARTMENT.

CODE:

2019 CALIFORNIA BUILDING CODE

DESIGN LOADS:
POOL WALLS:

1. AT REST PRESSURE	88 PCF (TRIANGULAR)
2. SURCHARGE (100 PSF x0.30 AT-REST)	30 PSF (UNIFORM AT 8 FT. IN DEPTH)
3. SEISMIC EARTH LOAD	35 PCF (INVERTED TRIANGULAR AT RETAINING GREATER THAN 6 FT.)

SEISMIC:
SITE CLASS .... D
Sds 1.196

FOUNDATION:

GEOTECHNICAL REPORT BY:
SOUTHERN CALIFORNIA GEOTECHNICAL
22885 SAVI RANCH PARKWAY, SUITE E
YORBA LINDA, CA 92887

PROJECT NO. 21G242-1
NOVEMBER 18, 2021

ALLOWABLE SOIL BEARING PRESSURE:
2000 PSF NET ALLOWABLE SOIL BEARING PRESSURE
18" MIN. DEPTH, SBC MAY BE INCREASED BY 1/3 FOR SEISMIC

BACKFILL NOTES:

DO NOT PLACE BACKFILL BEHIND POOL WALLS BEFORE CONCRETE HAS REACHED FULL DESIGN STRENGTH. BACKFILL OPERATION SHALL NOT IMPART LATERAL PRESSURE AGAINST POOL WALLS. USE VERTICAL COMPACTION EQUIPMENT UNDER DIRECTION OF GEOTECHNICAL ENGINEER. WHEEL OR TRACK COMPACTION OF SOIL BEHIND POOL WALL IS NOT ALLOWED WITHOUT ADEQUATE TEMPORARY BRACING. THE CONTRACTOR SHALL PROVIDE FOR DESIGN, PERMITS AND INSTALLATION OF SUCH BRACING.

CONCRETE:

CONCRETE CONSTRUCTION SHALL CONFORM WITH THE LATEST EDITION OF ACI 301, "SPECIFICATIONS FOR STRUCTURAL CONCRETE FOR BUILDINGS" AND ACI 318, "BUILDING CODE REQUIREMENTS FOR REINFORCED CONCRETE". SUBMIT MIX DESIGNS FOR EACH CLASS OF CONCRETE.

CONCRETE CONTAINING SUPERPLASTICIZING ADMIXTURE SHALL HAVE A SLUMP NOT EXCEEDING 3", TO BE FIELD VERIFIED, PRIOR TO ADDING ADMIXTURE, AND NOT EXCEEDING 8" AT PLACEMENT. ADDITION OF WATER TO A MIX WITH INSUFFICIENT SLUMP WILL NOT BE PERMITTED.

MECHANICALLY VIBRATE ALL CONCRETE WHEN PLACED, EXCEPT THAT SLABS ON GRADE NEED BE VIBRATED ONLY AROUND UNDER-FLOOR DUCTS, ETC.

SHOT PINS AT CURBS AND SLAB EDGES ARE NOT ALLOWED. THE USE OF EXPANSION ANCHORS AT CURBS IS NOT ALLOWED.

MINIMUM CONCRETE DESIGN STRENGTH SHALL BE AS FOLLOWS:

FOOTINGS	4000 PSI @ 28 DAYS	HARDROCK (145 PCF)
SLAB-ON-GRADE	4000 PSI @ 28 DAYS	HARDROCK
STRUCTURAL SLAB	4000 PSI @ 28 DAYS	HARDROCK
CONC. WALL	4000 PSI @ 28 DAYS	HARDROCK

REINFORCING STEEL:

DEFORMED BARS:

ASTM A615 GRADE 40 FOR #3 AND GRADE 60 FOR #4 AND LARGER. REINFORCING TO BE WELDED SHALL BE ASTM A706, GRADE 60, LOW ALLOY.

CLEAR CONCRETE COVERAGE (APPLIES UNLESS NOTED OTHERWISE):
CONCRETE CAST AGAINST AND PERMANENTLY EXPOSED TO EARTH --------- 3"
FORMED CONCRETE EXPOSED TO EARTH OR WEATHER ---------------- 2"
FORMED CONCRETE NOT EXPOSED TO EARTH OR WEATHER ------------- 1 1/2"
FROM TOP SURFACE OF SLAB ON GRADE ----------------------- 1 1/2"
CONCRETE FILL OVER METAL DECK -------------------------- 1"

WELDING:

UNLESS NOTED OTHERWISE, WELDING OF REINFORCING STEEL IS PROHIBITED. WHERE WELDING IS NOTED, WELD IN ACCORDANCE WITH AWS D1.1 USING E90 SERIES ELECTRODES. SUBMIT MILL TEST REPORTS ON THE REINFORCING TO BE WELDED AND THE PROPOSED WELDING PROCEDURE. (WPS) IN CONFORMANCE W/ 2001 CBC & AWS D1.4.

LAP SPLICES IN CONCRETE:

SEE TYPICAL DETAIL FOR LAP SPLICES IN CONCRETE BEAMS, WALLS, SLABS AND FOOTINGS. (UNLESS NOTED OTHERWISE, LAP SPLICES IN CONCRETE BEAMS, WALLS, SLABS AND FOOTINGS SHALL BE CLASS "B" TENSION LAP SPLICES AND LAP SPLICES IN CONCRETE COLUMNS SHALL BE STANDARD COMPRESSION LAP SPLICES PER LATEST EDITION OF ACI 318. STAGGER ALTERNATE SPLICES A MINIMUM OF ONE LAP LENGTH.) LAPS IN WELDED WIRE FABRIC SHALL BE MADE SO THAT THE OVERLAP MEASURED BETWEEN OUTERMOST CROSS WIRES OF EACH FABRIC SHEET IS NOT LESS THAN THE SPACING OF CROSS WIRES PLUS 2 INCHES. ALL SPLICE LOCATIONS SUBJECT TO APPROVAL.

PROVIDE BENT CORNER BARS TO MATCH AND LAP WITH HORIZONTAL BARS AT CORNERS AND INTERSECTIONS OF FOOTINGS AND WALLS. SPACING SHOWN FOR REINFORCING BARS ARE MAXIMUM ON CENTERS. ALL BARS PER CRSI SPECIFICATIONS AND HANDBOOK. DOWEL ALL VERTICAL REINFORCING TO THE FOUNDATION. CONCRETE COLUMN DOWEL EMBEDMENT SHALL BE A STANDARD COMPRESSION DOWEL EMBEDMENT LENGTH ACCORDING TO THE LATEST EDITION OF ACI 318. SECURELY TIE ALL BARS IN POSITION PRIOR TO PLACING CONCRETE. SUPPORT SLAB REINFORCEMENT WITH CONCRETE BLOCKS OR SUPPORT CHAIRS. REINFORCING SHALL NOT BE SUPPORTED BY STAKES DRIVEN INTO THE GROUND.

SHOTCRETE NOTES:

1. REINFORCING STEEL SHALL BE SECURELY TIED IN PLACE IN A MANNER THAT PREVENTS ANY MOVEMENT DURING THE WET MIX SHOTCRETING.
2. THE HEIGHT OF A LAYER SHALL BE LIMITED TO NOT MORE THAN THREE FEET AND A SUCCEEDING LAYER SHALL NOT BE PLACED IN LESS THAN THREE HOURS. NO SLOUGHING OR SAGGING SHALL BE PERMITTED.
3. REFER TO DRAWINGS FOR PLACEMENT OF DOWEL AND REINFORCEMENT.
4. REFER TO DRAWINGS FOR SHOTCRETE COLD JOINT DETAIL.
5. THE MINIMUM SLUMP SHALL BE 1½" AND THE MAXIMUM SLUMP SHALL BE 2½". SLUMP SHALL BE MEASURED AT THE POINT OF DISCHARGE FROM THE MIXER, EXCEPT THE BUILDING INSPECTOR MAY REQUIRE SLUMP TESTS AT THE DISCHARGE POINT WHERE WATER MAY HAVE BEEN ADDED.
6. A CAPABLE NOZZLEMAN'S HELPER WITH AN AIR BLOW PIPE SHALL BE PROVIDED TO ASSIST THE NOZZLEMAN IN KEEPING ALL REBOUND BUILD-UP OUT OF THE WORK.
7. ADDITIONAL WORKERS MAY BE REQUIRED TO TAKE THE REBOUND FROM THE WORK IF THE REBOUND CANNOT BE REMOVED BY THE AIR BLOW PIPE.
8. NO KEYWAYS OR EMBEDMENTS SHALL BE PLACED IN FRONT FACE THAT WILL INTERFACE WITH THE STREAM FROM THE NOZZLE.
9. THE CONTRACTOR AGREES TO PROVIDE A DESIGNATED LIAISON BETWEEN HIS CREW, THE DEPUTY INSPECTOR AND THE BUILDING INSPECTOR.
10. THE DEPUTY INSPECTOR SHALL BE INTERVIEWED AND APPROVED BY DEPARTMENT REPRESENTATIVES PRIOR TO INSPECTING THE WORK AT THE JOB SITE AND ONE DEPUTY SHALL BE ASSIGNED TO EACH NOZZLE.
11. RIGID OR OTHER APPROVED BACKING SHALL BE PLACED AGAINST THE EARTH WHERE THERE IS ANY LIKELIHOOD OF SOIL BEING DISLODGED IN SUFFICIENT QUANTITY TO DAMAGE THE CONCRETE DURING THE APPLICATION OF WET MIX SHOTCRETE. RIGID OR OTHER APPROVED BACKING SHALL BE USED WHERE A VOID IN THE EMBANKMENT IS TO BE BRIDGED.
12. IN THE EVENT THAT A PREVIOUSLY PRESUMED SOLID EMBANKMENT SHOULD SLOUGH OR SHED DIRT IN SUFFICIENT QUANTITY TO DAMAGE THE CONCRETE, THE WET MIX SHOTCRETE PLACEMENT WORK IN THAT AREA SHALL CEASE UNTIL A RIGID BACKING IS INSTALLED AND ANY CONTAMINATED SHOTCRETE IS REMOVED.

GENERAL NOTES FOR STRUCTURAL OBSERVATION:

1. STRUCTURAL OBSERVATION IS REQUIRED FOR THE STRUCTURAL SYSTEM IN ACCORDANCE WITH 2019 CBC CHAPTER 17. STRUCTURAL OBSERVATION IS THE VISUAL OBSERVATION OF THE ELEMENTS AND CONNECTIONS OF THE STRUCTURAL SYSTEMS AT SIGNIFICANT CONSTRUCTION STAGES AND THE COMPLETED STRUCTURE FOR GENERAL CONFORMANCE TO THE APPROVED PLANS AND SPECIFICATIONS. STRUCTURAL OBSERVATION DOES NOT WAIVE THE RESPONSIBILITY FOR THE INSPECTIONS REQUIRED OF THE BUILDING INSPECTOR OR THE DEPUTY INSPECTOR.
2. THE OWNER SHALL EMPLOY A CIVIL OR STRUCTURAL ENGINEER OR ARCHITECT TO PERFORM THE STRUCTURAL OBSERVATION. THE ENGINEER OR ARCHITECT SHALL BE REGISTERED OR LICENSED IN THE STATE OF CALIFORNIA. THE DEPARTMENT OF BUILDING AND SAFETY RECOMMENDS THE USE OF THE ENGINEER OR ARCHITECT RESPONSIBLE FOR THE STRUCTURAL DESIGN WHEN THEY ARE INDEPENDENT OF THE CONTRACTOR.
3. THE STRUCTURAL OBSERVER SHALL PROVIDE EVIDENCE OF EMPLOYMENT BY THE OWNER. A LETTER FROM THE OWNER OR A COPY OF THE AGREEMENT FOR SERVICES SHALL BE SENT TO THE BUILDING INSPECTOR BEFORE THE FIRST SITE VISIT. THE STRUCTURAL OBSERVER SHALL ALSO INFORM THE OWNER OF THE REQUIREMENTS FOR A PRECONSTRUCTION MEETING AND SHALL PRESIDE OVER THIS MEETING.
4. THE OWNER OR OWNER'S REPRESENTATIVE SHALL COORDINATE AND CALL FOR A MEETING BETWEEN THE ENGINEER OR ARCHITECT RESPONSIBLE FOR THE STRUCTURAL DESIGN, STRUCTURAL OBSERVER, CONTRACTOR, AFFECTED SUBCONTRACTORS AND DEPUTY INSPECTORS. THE PURPOSE OF THE MEETING SHALL BE IDENTIFY THE MAJOR STRUCTURAL ELEMENTS AND CONNECTIONS THAT AFFECT THE VERTICAL AND LATERAL LOAD SYSTEMS OF THE STRUCTURE AND TO REVIEW SCHEDULING OF THE REQUIRED OBSERVATIONS. A RECORD OF THE MEETING SHALL BE INCLUDED IN THE FIRST OBSERVATION REPORT SUBMITTED TO THE BUILDING INSPECTOR.
5. THE STRUCTURAL OBSERVER SHALL PERFORM SITE VISITS AT THOSE STEPS IN THE PROGRESS OF THE WORK THAT ALLOW FOR CORRECTION OF DEFICIENCIES WITHOUT SUBSTANTIAL EFFORT OR UNCOVERING OF THE WORK INVOLVED. AT A MINIMUM, THE FOLLOWING SIGNIFICANT CONSTRUCTION STAGES REQUIRE A SITE VISIT AND AN OBSERVATION REPORT FROM THE STRUCTURAL OBSERVER.

   CONSTRUCTION STAGES ELEMENTS/CONNECTIONS TO BE OBSERVED

   a) PRIOR TO CONCRETE PLACEMENT/FOUNDATION REINFORCEMENT AND ANCHOR BOLTS (IF ANY)
   b) STRUCTURAL SLAB REINFORCEMENT
6. THE STRUCTURAL OBSERVER SHALL PREPARE A REPORT ON THE DEPARTMENT FOR EACH SIGNIFICANT STAGE OF CONSTRUCTION OBSERVED. THE ORIGINAL OF THE OBSERVATION REPORT SHALL BE SENT TO THE BUILDING INSPECTOR'S OFFICE AND SHALL BE SIGNED AND SEALED (WET STAMP) BY THE RESPONSIBLE STRUCTURAL OBSERVER. ONE COPY OF THE OBSERVATION REPORT SHALL BE ATTACHED TO THE APPROVED PLANS. THE COPY ATTACHED TO THE PLANS NEED NOT BE SEALED BUT SHALL BE SIGNED BY THE RESPONSIBLE STRUCTURAL OBSERVER OR THEIR DESIGNEE. COPIES OF THE REPORT SHALL ALSO BE GIVEN TO THE OWNER, CONTRACTOR, AND DEPUTY INSPECTOR.
7. A FINAL OBSERVATION REPORT MUST BE SUBMITTED WHICH SHOWS THAT ALL OBSERVED DEFICIENCIES WERE RESOLVED AND THE STRUCTURAL SYSTEM GENERALLY CONFORMS WITH THE APPROVED PLANS AND SPECIFICATIONS. THE DEPARTMENT OF BUILDING AND SAFETY WILL NOT ACCEPT THE STRUCTURAL WORK WITHOUT THIS FINAL OBSERVATION REPORT AND THE CORRECTION OF SPECIFIC DEFICIENCIES NOTED DURING NORMAL BUILDING AND DEPUTY INSPECTION.
8. THE STRUCTURAL OBSERVER SHALL SEND THE ORIGINAL OBSERVATION REPORT TO THE FOLLOWING INSPECTION OFFICE:

   INSPECTION GROUP NAME:
   STREET ADDRESS:

   CA, ZIP CODE:
9. WHEN THE OWNER ELECTS TO CHANGE THE STRUCTURAL OBSERVER OF RECORD, THE OWNER SHALL:

   A. NOTIFY THE BUILDING INSPECTOR IN WRITING BEFORE THE NEXT INSPECTION.
   B. CALL AN ADDITIONAL PRECONSTRUCTION MEETING, AND.
   C. FURNISH THE REPLACEMENT STRUCTURAL OBSERVER WITH A COPY OF ALL PREVIOUS OBSERVATION REPORT.

   THE REPLACEMENT STRUCTURAL OBSERVER SHALL APPROVE THE CORRECTION OF THE ORIGINAL OBSERVED DEFICIENCIES UNLESS OTHERWISE APPROVED BY PLAN CHECK SUPERVISION. THE POLICY OF THE DEPARTMENT SHALL BE TO CORRECT ANY PROPERLY NOTED DEFICIENCIES WITHOUT CONSIDERATION OF THEIR SOURCE
10. THE ENGINEER OR ARCHITECT OF RECORD SHALL DEVELOP ALL CHANGES RELATING TO THE STRUCTURAL SYSTEMS. THE BUILDING DEPARTMENT SHALL REVIEW AND APPROVE ALL CHANGES TO THE APPROVED PLANS AND SPECIFICATIONS.

SPECIAL INSPECTIONS:

CONTINUOUS DEPUTY INSPECTION IS REQUIRED PER CHAPTER 17, 2019 CBC, FOR THE FOLLOWING:

1) FOOTING EXCAVATIONS SHALL BE INSPECTED & APPROVED BY GEOTECHNICAL ENGINEER PRIOR TO PLACING ANY FORMWORK, REINF., OR CONCRETE.
2) ALL CONCRETE PLACEMENT & VERIFICATION OF CONCRETE REINFORCEMENT.

ALL SPECIAL INSPECTORS SHALL REPORT TO THE CITY OR AND SHALL BE APPROVED BY GARDENA CITY BUILDING DEPARTMENT.

SUBMITTAL REQUIREMENTS

CATEGORY	REQUIRED DOCUMENTATION
CONCRETE REINF.	SHOP DRAWINGS & MILL CERT.
CONCRETE	MIX DESIGNS

EXPANSION ANCHOR BOLTS - CONCRETE:

ALL NEW EXPANSION BOLTS NOTED IN DRAWINGS ARE TO BE DEWALT POWER-STUD+SD2 AND SHALL BE DESIGNED AND INSTALLED PER ESR-2502 U.N.O.

ALL FIELD INSTALLED CONCRETE EXPANSION ANCHORS SHALL BE APPROVED FOR THE TYPE AND INSTALLATION FOR SPECIFIED APPLICATION AND MATERIALS. ALL BOLTS SHALL HAVE AN APPROVED ICC-ES REPORT NUMBER.

WHEN INSTALLING DRILLED-IN ANCHORS IN EXISTING NON-PRESTRESSED REINFORCED CONCRETE, USE CARE AND CAUTION TO AVOID CUTTING OR DAMAGING THE EXISTING REINFORCING BARS. WHEN INSTALLING ANCHORS INTO EXISTING PRESTRESSED CONCRETE (PRE- OR POST-TENSIONED) LOCATE THE PRESTRESSED TENDONS BY USING A NON-DESTRUCTIVE METHOD PRIOR TO INSTALLATION. EXERCISE EXTREME CARE AND CAUTION TO AVOID CUTTING OR DAMAGING THE TENDONS DURING INSTALLATIOIN. MAINTAIN A MINIMUM CLEARANCE OF ONE INCH BETWEEN THE REINFORCEMENT AND THE DRILLED-IN ANCHOR.

ALL DRILLED HOLES SHALL BE BLOWN OUT WITH COMPRESSED AIR COMPLETELY BEFORE BOLT INSTALLATION.

EXPANSION BOLTS SHALL NOT BE INSTALLED INTO CONCRETE PATCHES, GROUT POCKETS, OR OTHERWISE INADEQUATE CONCRETE SUBSTRATE. WHERE AN ANCHOR IS SHOWN INTO SUCH MATERIALS THE SEOR SHALL BE NOTIFIED AND CONSTRUCTION SHALL WAIT FOR FURTHER INSTRUCTION.

ALL WALL ANCHOR TIES USING EXPANSION BOLT ANCHORS SHALL BE INSTALLED TIGHT TO THE WALL OR LEDGER. THERE SHALL BE NO GAP BETWEEN THE NUT AND STRAP OR STRAP AND WALL/LEDGER.

ALL WALL ANCHORS SHALL BE PROTECTED FROM WEATHER EXPOSURE. ANY EXPOSED EXTERIOR ANCHOR BOLTS SHALL BE STAINLESS STEEL.

PERIODIC SPECIAL INSPECTION IS REQUIRED DURING ANCHOR INSTALLATION TO VERIFY ANCHOR TYPE, ANCHOR DIMENSIONS, CONCRETE TYPE, CONCRETE COMPRESSIVE STRENGTH, ANCHOR SPACING, EDGE DISTANCE, CONCRETE MEMBER THICKNESS, TIGHTENING TORQUE, HOLE DIMENSIONS, ANCHOR EMBEDMENT, AND ADHERENCE TO THE MANUFACTURER'S PRINTED INSTALLATION INSTRUCTIONS.

ANY PANEL JOINTS, COLD JOINTS, OR WALL ENDS THAT OCCUR WITHIN 1.5 X EMBEDMENT OF THE ANCHOR SHALL BE REPORTED TO THE SEOR UNLESS THE MINIMUM EDGE DISTANCE IS SPECIFICALLY DETAILED AND SHOWN IN A DETAIL.

ALL ANCHORS SHALL BE TORQUED AS FOLLOWS FOR PROPER INSTALLATION: (HARDROCK OR LIGHTWEIGHT CONCRETE)

BOLT DIAMETER (IN) -POWER-STUD+SD2	3/8"	1/2"	5/8"	3/4"	-
TORQUE (FT-LBS)	20	40	80	110	-

APPLY PROOF TEST LOADS TO ANCHORS WITHOUT REMOVING THE NUT IF POSSIBLE. IF NOT, REMOVE THE NUT AND INSTALL A THREADED COUPLER NUT TO THE SAME TIGHTNESS OF THE ORIGINAL NUT USING A TORQUE WRENCH AND APPLY LOAD.

MINIMUM ANCHOR EMBEDMENT AND EDGE DISTANCE ARE AS FOLLOWS:

BOLT DIAMETER (IN) -POWER-STUD+SD2	3/8"	1/2"	5/8"	3/4"	-
MIN. EMBEDMENT	2"	2"	3 1/4"	3 3/4"	-
MIN. EDGE DISTANCE	2 1/2"	2 3/4"	4 1/4"	5"	-

TENSION TEST NOTES WHEN APPLICABLE:

REACTION LOADS FROM TEST FIXTURES MAY BE APPLIED CLOSE TO THE ANCHOR BEING TESTED, PROVIDED THE ANCHOR IS NOT RESTRAINED FROM WITHDRAWING BY THE FIXTURE(S).

TEST EQUIPMENT SHALL BE CALIBRATED BY AN APPROVED TESTING LABORATORY IN ACCORDANCE WITH STANDARD RECOGNIZED PROCEDURES.

THE FOLLOWING TEST LOADS SHALL BE USED: FOR 3000 PSI CONCRETE

BOLT DIAMETER (IN) -POWER-STUD+SD2	3/8"	1/2"	5/8"	3/4"	-
TENSION LOAD (LBS)	1401	1605	3325	4120	-

THE FOLLOWING CRITERIA APPLY FOR THE ACCEPTANCE OF INSTALLED ANCHORS: HYDRAULIC RAM METHOD: THE ANCHOR SHOULD HAVE NO OBSERVABLE MOVEMENT AT THE APPLICABLE TEST LOAD. A PRACTICAL WAY TO DETERMINE OBSERVABLE MOVEMENT IS THAT THE WASHER UNDER THE NUT BECOMES LOOSE. TORQUE WRENCH METHOD: THE APPLICABLE TEST TORQUE MUST BE REACHED WITHIN ONE-QUARTER (1/4) TURN FOR 3/8" AND ONE-HALF (1/2) TURN FOR 1/2" EXPANSION ANCHOR AND UP.

TESTING BASED ON THE ICC-ESR SHOULD OCCUR 24 HOURS MINIMUM AFTER INSTALLATION OF THE SUBJECT ANCHORS.

IF ANY ANCHOR FAILS TESTING, NOTIFY THE SEOR FOR FURTHER TESTING FREQUENCY.

SHEET INDEX:

SP3.11 GENERAL NOTES
SP3.12 GENERAL NOTES
SP3.13 TYPICAL CONCRETE DETAILS

SP3.21 POOL FOUNDATION PLAN
SP3.22 POOL SECTIONS

SP3.31 POOL DETAILS
SP3.32 EQUIP ANCHORAGE DETAILS

City of Garden Grove
Code Program

GARDEN GROVE

STRUCTURAL OBSERVATION REPORT FORM

STRUCTURAL OBSERVATION *means the visual observation of the structural system, for general conformance to the approved plans and specifications, at significant construction stages and at completion of the structural system. Structural observation does not include or waive the responsibility for the inspections required by Section 108, 1704 or other sections of the code.*

Report No. ________

This report includes all construction work through __day of ____________, 20___Page No. ____of ____

Project Address: 1654 West 160th St., Gardena, CA 90247		Structural Observer of Record (SOR): Paul Van Benschoten	Phone No. of SOR: 818.285.2650
Building Permit No.:	Structural Observation performed by: Paul Van Benschoten	Professional Lic./Reg. No. of Observer: S-4715	Phone No. of Observer: 818.285.2650

OBSERVED STRUCTURAL ELEMENTS AND THEIR CONNECTIONS

FOUNDATION	WALL	FRAME	FLOOR	ELEMENT/ CONNECTION OBSERVATION LOCATION
☐ Footing, Stem Walls, Piers	☐ Concrete	☐ Steel Moment Frame	☐ Concrete	
☐ Mat Foundation	☐ Modulus of Elasticity* Concrete Shear Wall	☐ Steel Braced Frame	☐ Steel Deck	
☐ Caisson, Piles, Grade Beams	☐ Masonry	☐ Concrete Moment Frame	☐ Wood	
☐ Retaining Foundation Hillside Special Anchors	☐ Wood	☐ Modulus of Elasticity* Seismic Moment Frames	☐ Others:	
☐ Others:	☐ Others:	☐ Others:		

* For concrete buildings more than 160 feet in Structural Height: Concrete mix meets the modulus of elasticity requirements in design for seismic force resisting systems.

NOTED DEFICIENCIES with the proposed corresponding corrective actions with respect to general conformance with the approved plans or in the load path: *(A final report by the structural observer which states that all observed deficiencies have been resolved is required before acceptance of the work by the building officials.)*

I DECLARE THAT THE FOLLOWING STATEMENTS ARE TRUE TO THE BEST OF MY KNOWLEDGE:

1. I AM THE ENGINEER OR ARCHITECT RETAINED BY THE OWNER TO BE IN RESPONSIBLE CHARGE FOR THE STRUCTURAL OBSERVATION IN ACCORDANCE WITH THE REQUIREMENTS OF THE **CITY OF GARDEN GROVE**.
2. I, OR ANOTHER ENGINEER OR ARCHITECT WHO I HAVE DESIGNATED ABOVE AND IS UNDER MY RESPONSIBLE CHARGE, HAS PERFORMED THE REQUIRED SITE VISITS AT EACH SIGNIFICANT CONSTRUCTION STATE TO VERIFY IF THE STRUCTURE IS IN GENERAL CONFORMANCE WITH APPROVED PLANS AND SPECIFICATIONS;
3. ALL NOTED DEFICIENCIES WHICH REMAIN TO BE CORRECTED HAVE BEEN INDICATED ABOVE;
4. I RECOMMEND THAT ACCEPTANCE OF THE STRUCTURAL SYSTEMS BY THE **CITY OF GARDEN GROVE** BE WITHHELD UNTIL ALL OBSERVED DEFICIENCIES ARE CORRECTED.

SIGNATURE OF STRUCTURAL OBSERVER **DATE** **STAMP OF STRUCTURAL**

OBSERVATION REPORT (Part 1) (2/1/18)

Project: *Community Aquatic and Senior Center*
Location: *1654 West 160th Street, Gardena, CA 90247*

Special Requirements for Seismic & Wind Resistance

This Statement of Special Inspections includes the following building systems:

- ☒ Soils and Foundations
- ☒ Cast-in-Place Concrete
- ☐ Precast Concrete
- ☐ Masonry
- ☐ Structural Steel
- ☐ Cold-Formed Steel Framing
- ☐ Spray Fire Resistant Material
- ☐ Wood Construction
- ☐ Exterior Insulation and Finish System
- ☐ Mechanical & Electrical Systems
- ☐ Architectural Systems
- ☐ Special Cases

Approved Agencies	Name of Individual and Firm	Address, Telephone, e-mail
1. **Special Inspection Coordinator**		
2. Inspector		
3. Inspector		
4. Testing Agency		
5. Testing Agency		
6. Other		

Note: The inspectors and testing agencies shall be engaged by the Owner or the Owner's Agent, and not by the Contractor or Subcontractor whose work is to be inspected or tested. Any conflict of interest must be disclosed to the Building Official, prior to commencing work.

Project: *Community Aquatic and Senior Center*
Location: *1654 West 160th Street, Gardena, CA 90247*

Special Requirements for Seismic & Wind Resistance

Quality Assurance for Seismic Resistance

Seismic Design Category *D*
Seismic Requirements Necessary (Y/N) *N*
Structural Observation Required (Y/N) *Y*

Description of seismic force resisting system and designated seismic systems:

N/A

Quality Assurance for Wind Requirements

Basic Wind Speed (3 second gust) *110 MPH*
Wind Exposure Category *C*
Wind Requirements Necessary (Y/N) *N*
Structural Observation Required (Y/N) *N*

Description of wind force resisting system and designated wind resisting components:

N/A

Statement of Responsibility

Each contractor responsible for the construction or fabrication of a system or component designated above must submit a Statement of Responsibility.

Project: *Community Aquatic and Senior Center*
Location: *1654 West 160th Street, Gardena, CA 90247*

Construction Observation

Structural Observation

3.1.1 Structural Observation of construction for Seismic and/or Wind Resistance is required when indicated in the Special Requirements for Seismic and Wind Section above. The structural Observer shall, as a minimum, perform Structural Observation at the following Scheduled Intervals or Stages of Construction, and at the completion of the structural system.

Structural Observer *Paul Van Benschoten, SE (S-4715) Coffman Engineers (818) 285-2650*

Item	Scheduled Interval or Stage of Construction
1	*Footings: excavations, reinforcement, formwork, bolts and embeds*
2	*Structural Slab On Grade reinforcing*
3	*Pool Wall reinforcing*

WORK REQUIRING SPECIAL INSPECTION AND STRUCTURAL OBSERVATION:

CBC 1704 and 1708

			TYPE OF INSPECTION		STRUCT OBSERV
			CONTINUOUS	PERIODIC	
SOILS (TABLE 1704.7)	**1.a**	VERIFY MATERIALS BELOW FOOTINGS FOR DESIGN BEARING CAPACITY	-	x	GEO ENG
	b	VERIFY DEPTH OF EXCAVATION AND TYPE OF MATERIALS REACHED	-	x	GEO ENG
	c	VERIFY THE SUBGRADE AND SITE PREPARATIONS FOR CONTROLLED FILL	-	x	GEO ENG
	d	VERIFY MATERIALS USED, DENSITIES, LAYERED THICKNESS AND COMPACTION OF BACKFILLS	x		
	e	PERFORM CLASSSIFICATION AND TESTING OF CONTROLLED FILL MATERIALS		x	
STEEL (TABLE 1704.3)	**4.a**	VERIFY ID MARKINGS AND MILL CERTIFICATIONS ON STEEL MEMBERS PER APPROVED PLANS	-	x	
	b	VERIFY MARKINGS / CERTIFICATIONS AND TOUGHNESS REQUIREMENTS OF FILLER MATERIALS	-	x	
	c	VERIFY MARKINGS AND CERTIFICATION OF HIGH STRENGTH BOLTS / NUTS & WASHERS	-	x	
	d	INSPECT THE INSTALLATION OF NON-SLIP CRITICAL BOLTED CONNECTIONS		x	
	e	COMPLETE / PARTIAL PENETRATION GROOVE WELDS AND FILLET WELDS >5/16"	x		
	f	SINGLE PASS FILLET WELDS ≤5/16" , FLOOR AND ROOF DECK WELDS	-	x	
	g	STRUCTURAL STEEL ERECTION - BRACING & STIFFENING / JOINT DETAILS AT EACH LOCATION	-	x	
CONCRETE (TABLE 1704.4)	**5.a.**	VERIFY AND INSPECT REINFORCING STEEL	-	x	
	b	VERIFY WELDABILITY AND INSPECT REINFORCING STEEL WELDING (PER AWS D1.4)	x		
	c	INSPECT BOLT INSTALLATION / EMBEDMENTS, BEFORE AND DURING PLACEMENT OF CONCRETE	x		
	d	VERIFY CONCRETE MIX DESIGN AND MOLDING OF COMPRESSION TEST SAMPLES	-	x	
	e	VERIFY THE SLUMP / AIR CONTENT AND TEMPERATURE OF FRESH CONCRETE DELIVERED	x	-	
	f	INSPECT CONCRETE PLACEMENT AND APPLICATION TECHNIQUES	x	-	
	g	VERIFY DIMENSIONS, SHAPE AND LOCATION OF CONCRETE MEMBER BEING FORMED	-	x	
MASONRY (TABLE 1704.5)	**6.a**	VERIFY / CONFIRM PREMIXED MORTAR	-	x	
	b	VERIFY SPECIFICATIONS FOR SIZE/GRADE/ TYPE OF MASONRY UNIT & REINFORCEMENT DETAILS	-	x	
	c	PLACEMENT OF MASONRY UNITS AND CONSTRUCTION OF MASONRY JOINTS	-	x	
	d	PLACEMENT OF REINFORCEMENTS & CONNECTORS	-	x	
	e	VERIFY CLEANOUTS, GROUT SPACE CLEARANCES, CLEANLINESS AND MORTAR PROJECTIONS.	-	x	
	f	VERIFY WELDABILITY AND INSPECT REINFORCING STEEL WELDING (PER AWS D1.4)	x	-	
	g	PREPARING REQUIRED GROUT / MORTAR SPECIMENS AND/OR PRISMS FOR TESTING	x	-	
	h	INSPECT GROUT PLACEMENT	x	-	
LIGHT FRAMED 1704.6	**7.a**	VERIFY LUMBER SPECIES, GRADING, SIZE, MOISTURE CONTENT, SURFACE TREATMENT, CAMBER AND STRUCTURAL PANEL SHEATHING	-	x	
	b	INSPECT CERTIFICATES AND METAL STUD IDENTIFICATION, SECTION PROPERTIES AND FINISH COATING	-	x	
	c	VERIFY NAIL, STAPLE, SCREW, AND BOLT / FASTENER TYPE, GRADE AND LOCATION	-	x	
	d	VERIFY MATERIALS AND INSTALLATION DETAILS FOR HOLD-DOWN, STRAP, TIE ROD, ANCHOR; AND (PREFABRICATED) ENGINEERED SYSTEM / STRUCTURAL PANEL SHEATHING	-	x	
	e	IDENTIFY LATERAL SYSTEM AND LOAD PATH FOR LOCATION OF PLATES, SHEAR WALLS, DIAPHRAGMS, SQUASH BLOCKS, HOLD-DOWN AND STRAPPING BEAMS / COLUMNS		x	
	f	INSPECT AND VERIFY SEISMIC CONNECTIONS OF ITEM 7.e (ABOVE) FOR COMPLIANCE	-	x	
1707.3 & 1707.4	**g**	VERIFY STUD SPACING, BLOCKING, NAILING (FIELD & EDGE); OPENING / PENETRATION TREATMENT AND BOUNDARY ATTACHMENT CONDITIONS	-	x	
SEISMIC RESISTANCE 1707.1	**8.a**	INSTALLATION OF (CHEMICAL / EPOXY) ADHESIVE ANCHORS, RODS AND DOWELS	x		
	b	INSTALLATION AND TORQUE TESTING EXPANSION ANCHORS IN CONCRETE OR MASONRY	-	x	

CONCRETE INSPECTIONS & VERIFICATION

IBC Table 1704.4

VERIFICATION AND INSPECTION		CONTINUOUS	PERIODIC	STRUCT OBSERV
1.	Inspection of reinforcing steel, including prestressing tendons, and placement.	---	X	
2.	Inspection of reinforcing steel welding in accordance with Table 1704.3, Item 5b.	X	---	
3.	Inspect bolts to be installed in concrete prior to and during placement of concrete where allowable loads have been increased.	X	---	
4.	Verifying use of required design mix.	---	X	
5.	At the time fresh concrete is sampled to fabricate specimens for strength tests, perform slump and air content tests, and determine the temperature of the concrete.	X	---	
6.	Inspection of concrete and shotcrete placement for proper application techniques.	X	---	
7.	Inspection for maintenance of specified curing temperature and techniques.	---	X	
8.	Inspection of prestressed concrete:	---	---	
	a. Application of prestressing forces.	X	---	
	b. Grouting of bonded prestressing tendons in the seismic-force-resisting system.	X	---	
9.	Erection of precast concrete members.	---	X	
10.	Verification of in-situ concrete strength, prior to stressing of tendons in posttensioned concrete and prior to removal of shores and forms from beams and structural slabs.	---	X	
11.	Inspect formwork for shape, location and dimensions of the concrete member being formed.	---	X	
12.		---	---	---
13.		---	---	---
14.				
15.				
16.				
17.				

FOUNDATION INSPECTIONS & VERIFICATION

VERIFICATION AND INSPECTION		CONTINUOUS	PERIODIC	*ENGR* OBSERV
	SOILS - IBC Table 1704.7			
1.	Verify subgrade materials below the footing for design bearing capacity.	---	X	
2.	Verify depth of excavation and type of subgrade materials reached.	---	X	
3.	Perform classification and compaction testing of controlled backfill materials.		X	
4.	Verify materials used, layered thicknesses and compaction of back fills.	X		
5.	Verify the subgrade and site preparations for controlled fill.	---	X	
	PILE FOUNDATONS - IBC Table 1704.8			
6.	Verify pile sizes, lengths and material specifications for each location.	X	---	
7.	Determine capacities of test piles and conduct additional load tests, as required.	X	---	
8.	Observe driving operations and maintain complete and accurate records for each pile.	X	---	
9.	Verify placement locations and plumbness, confirm type and size of hammer, record number of blows per foot of penetration, determine required penetrations to achieve design capacity, record tip and butt elevations and document any pile damage.		---	
10.	For steel piles, perform additional inspections in accordance with Section 1704.3.	---	---	
11.	For concrete piles and concrete-filled piles, perform additional inspections in accordance with Section 1704.4.	---	---	
12.	For specialty piles, perform additional inspections as determined by the registered design professional in responsible charge.	---	---	
13.	For augered uncased piles and caisson piles, perform inspections in accordance with Section 1704.9.	---	---	
	PIER FOUNDATIONS - IBC Table 1704.9			
14.	Observe drilling operations to monitor and record - drilled lengths, diameters and bell size (if applicable) for each pier.	X	---	
15.	Verify placement locations and plumbness, confirm pier diameters, bell diameters (if applicable), lengths, embedment into bedrock (if applicable) and adequate end bearing strata capacity.	X	---	
16.	For concrete piers, perform additional inspections in accordance with Section 1704.4.	---	---	
17.	For masonry piers, perform additional inspections in accordance with Section 1704.5.	---	---	
18.				
19.				

DIGALERT
DIAL TOLL FREE
1-800-422-4133
AT LEAST TWO DAYS BEFORE YOU DIG
UNDERGROUND SERVICE ALERT OF SOUTHERN CALIFORNIA

BASIS OF BEARINGS:
BEARINGS SHOWN HEREON ARE BASED ON THE CENTERLINE OF 162 ND STREET (FORMERLY MARKET STREET) BEING N 89° 55' 30" E SHOWN ON TRACT NO. 10901, M.B. 254/31-32

BENCHMARK:
THE CITY OF GARDENA BENCHMARK NO. 5D-15 ELEV. = 43.508

CITY OF GARDENA · FREEWAY CITY · INCORPORATED 1930

PREPARED BY:
COFFMAN ENGINEERS
16133 Ventura Boulevard, Suite 1010
Encino, CA 91436
ph 818.285.2650
www.coffman.com
CEI Job# 222224

REGISTERED PROFESSIONAL ENGINEER · PAUL VAN BENSCHOTEN · No. S-4715 · STRUCTURAL · STATE OF CALIFORNIA

PREPARED UNDER THE SUPERVISION OF:
RJM DESIGN GROUP
31591 Camino Capistrano
San Juan Capistrano, CA 92675
www.RJMdesigngroup.com
[949] 493-2690 *fax*
[949] 493-2600 *phone*

LICENSED LANDSCAPE ARCHITECT · STATE OF CALIFORNIA · Signature · 09/30/2025 Renewal Date · 9/26/2023 Date

REVISIONS

NO.	DESCRIPTION	DATE	APPROVED
1	90% CD SUBMITTAL	10/02/2023	
2	100% CD SUBMITTAL	10/02/2023	
3	FINAL SUBMITTAL	10/02/2023	

CITY OF GARDENA
DEPARTMENT OF PUBLIC WORKS - ENGINEERING

GENERAL NOTES

COMMUNITY AQUATICS & SENIOR CENTER
SP3.12

	INITIAL	DATE
DESIGNED BY	JNP	04/18/23
DRAWN BY	JNP	06/20/23
CHECKED BY	PVB	06/30/23

APPROVED BY:
DATE DIRECTOR OF PUBLIC WORKS

SHT. 164 OF 195 DWG. NO. 5-2606

FILE PATH:
PLOT TIME:

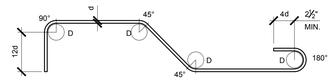

TYPICAL HOOKS & BENDS

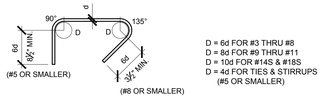

D = 6d FOR #3 THRU #8
D = 8d FOR #9 THRU #11
D = 10d FOR #14S & #18S
D = 4d FOR TIES & STIRRUPS (#5 OR SMALLER)

TIES & STIRRUPS

3 REINFORCING BAR DETAILS

LAP SPLICE SCHEDULE "CLASS B" (STRAIGHT BARS)																	
	CONCRETE STRENGTH f'c	BAR															
		#4		#5		#6		#7		#8		#9		#10		#11	
		TOP	OTHER	TOP	OTHER	TOP	OTHER	TOP	OTHER	TOP	OTHER	TOP	OTHER	TOP	OTHER	TOP	OTHER
CLEAR COVER ≥ d AND CLEAR SPACING ≥ 2d	3000 PSI	37	29	47	36	56	43	81	63	93	72	105	81	118	91	131	101
	4000 PSI	33	25	41	31	49	37	71	54	81	62	91	70	102	79	113	87
	5000 PSI	29	23	36	28	43	34	63	49	72	56	81	63	92	70	102	78
OTHER CASES	3000 PSI	56	43	70	54	84	65	122	94	139	107	157	121	177	136	196	151
	4000 PSI	49	37	61	47	73	56	106	81	121	93	136	105	153	118	170	131
	5000 PSI	43	32	54	42	65	50	95	73	108	83	122	94	137	106	152	117

DEVELOPMENT LENGTH SCHEDULE "CLASS A" (STRAIGHT & HOOKED BARS)																	
		CONCRETE STRENGTH f'c	BAR														
			#4		#5		#6		#7		#8		#9		#10		#11	
			TOP	OTHER	TOP	OTHER	TOP	OTHER	TOP	OTHER	TOP	OTHER	TOP	OTHER	TOP	OTHER	TOP	OTHER
STRAIGHT	CLEAR COVER ≥ d AND CLEAR SPACING ≥ 2d	3000 PSI	29	22	36	28	43	33	63	48	72	55	81	62	91	70	101	78
		4000 PSI	25	19	31	24	37	29	54	42	62	48	70	54	79	61	87	67
		5000 PSI	23	17	28	22	34	26	49	38	56	43	63	48	70	54	78	60
	OTHER CASES	3000 PSI	43	33	54	42	65	50	94	72	107	83	121	93	136	105	151	116
		4000 PSI	37	29	47	36	56	43	81	63	93	72	105	81	118	91	131	101
		5000 PSI	34	26	42	32	50	39	73	56	83	64	94	72	106	81	117	90
HOOK	STANDARD	3000 PSI	11		14		17		20		22		25		28		31	
		4000 PSI	10		12		15		17		19		22		25		27	
		5000 PSI	9		11		13		15		17		20		22		24	

NOTE:
1. T=TOP BAR, L=LAP SPLICE LENGTH
2. "d" INDICATES BAR DIAMETER.
3. ALL DIMENSIONS SHOWN IN TABLE ABOVE ARE IN INCHES.

NOTES:
1. TABULATED VALUES AND NOTES ARE PER ACI318-14.
2. SPLICES SHALL BE CONTACT TENSION LAP SPLICES U.N.O.
3. LENGTHS SHOWN ARE FOR GRADE 60 UNCOATED BARS.
4. ALL LAP SPLICES SHALL BE CLASS B, UNLESS CLASS A IS SPECIFICALLY APPROVED BY THE ENGINEER.
5. THE SCHEDULES SHOWN ON THIS DETAIL APPLY TO NORMAL WEIGHT CONCRETE.
6. FOR LIGHTWEIGHT CONCRETE, INCREASE LAP SPLICE LENGTH BY 33%.
7. ALL HORIZONTAL AND VERITICAL SPLICES SHALL BE STAGGERED AS SHOWN BELOW WHERE POSSIBLE U.N.O. WHERE SPLICES ARE NOT STAGGERED THE LAP SPLICE LENGTH SHALL BE INCREASED BY 30%.
8. THE SMALLER BAR LAP LENGTH SHALL BE USED WHEN SPLICING BARS OF DIFFERENT SIZES.
9. TOP BARS ARE HORIZONTAL BARS PLACED SO THAT MORE THAN 12" OF CONCRETE IS CAST IN THE MEMBER BELOW THE BAR.
10. LAP LENGTHS SPECIFICALLY DETAILED ON DRAWINGS SHALL GOVERN IN LIEU OF THE LAP LENGTHS SCHEDULED. OTHERWISE, ALL DETAILING AND PLACEMENT OF REINFORCING SHALL COMPLY WITH THE LAP SPLICE SCHEDULES AND DETAILS.
11. BUNDLED BAR SPLICES:
    a) INDIVIDUAL BAR SPLICES WITHIN THE BUNDLE SHALL NOT OVERLAP EACH OTHER.
    b) INCREASE LAP LENGTH 20% AT THREE BAR BUNDLES.
    c) INCREASE LAP LENGTH 33% AT FOUR BAR BUNDLES.
12. FOR #14 AND #18 BARS, USE MECHANICAL SPLICE IN ACCORDANCE WITH ACI-318 REQUIREMENTS.
13. EPOXY COATED BAR DEVELOPMENT & SPLICES:
    HOOKS: INCREASE DEVELOPMENT & LAP LENGTH 20%.
13. CONT.
    STRAIGHT BARS:
    a) WHEN CONCRETE COVER IS LESS THAN 3d OR CLEAR SPACING IS LESS THAN 6d, INCREASE DEVELOPMENT & LAP LENGTH 50%.
    b) FOR OTHER CASES, INCREASE LAP LENGTH 20%.
14. HOOK PORTION OF SCHEDULE ASSUMES A STANDARD 90° HOOK.
15. SEISMIC CONDITIONS:
    a) SEISMIC DIAPHRAGM AND COLLECTOR BARS REQUIRE NO INCREASE TO HOOK OR LAP SPLICE LENGTHS.
    b) VERTICAL BARS OF SPECIAL REINFORCED CONCRETE WALLS SHALL HAVE A BOTTOM BAR LAP SPLICE INCREASED BY 25%.
    c) DEVELOPMENT LENGTHS AND LAP SPLICES FOR CONCRETE SPECIAL MOMENT RESISTING FRAMES ARE NOT COVERED BY THIS DETAIL AND MUST MEET ALL ACI 318 CHAPTER 18 REQUIREMENTS.

9 TYPICAL NORMAL WEIGHT CONCRETE REINFORCING LAP SPLICE SCHEDULE

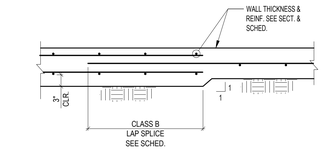

8 DOUBLE TO SINGLE WALL REINFORCING TRANSITION PLAN

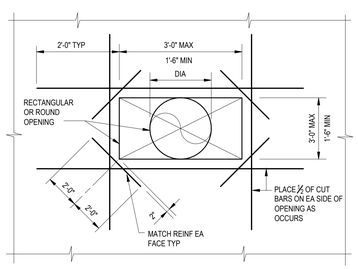

PLAN

13 POOL CONC WALL OPENING DETAIL

DIGALERT
DIAL TOLL FREE
1-800-422-4133
AT LEAST TWO DAYS BEFORE YOU DIG
UNDERGROUND SERVICE ALERT OF SOUTHERN CALIFORNIA

BASIS OF BEARINGS:
BEARINGS SHOWN HEREON ARE BASED ON THE CENTERLINE OF 162 ND STREET (FORMERLY MARKET STREET) BEING N 89° 55' 30" E SHOWN ON TRACT NO. 10901, M.B. 254/31-32

BENCHMARK:
THE CITY OF GARDENA BENCHMARK NO. 5D-15 ELEV. = 43.508

PREPARED BY:
COFFMAN ENGINEERS
16133 Ventura Boulevard, Suite 1010
Encino, CA 91436
ph 818.285.2650
www.coffman.com
CEI Job# 222224

PREPARED UNDER THE SUPERVISION OF:
RJM DESIGN GROUP
31591 Camino Capistrano
San Juan Capistrano, CA 92675
www.RJMdesigngroup.com
[949] 493-2690 fax
[949] 493-2600 phone

REVISIONS

NO.	DESCRIPTION	DATE	APPROVED
1	90% CD SUBMITTAL	10/02/2023	
2	100% CD SUBMITTAL	10/02/2023	
3	FINAL SUBMITTAL	10/02/2023	

CITY OF GARDENA
DEPARTMENT OF PUBLIC WORKS - ENGINEERING
TYPICAL CONCRETE DETAILS
COMMUNITY AQUATICS & SENIOR CENTER
SP3.13

	INITIAL	DATE
DESIGNED BY	JNP	04/18/23
DRAWN BY	JNP	04/20/23
CHECKED BY	FVS	04/30/23

APPROVED BY:
DATE
DIRECTOR OF PUBLIC WORKS

SHT. 165 OF 195 DWG. NO. 5-2606

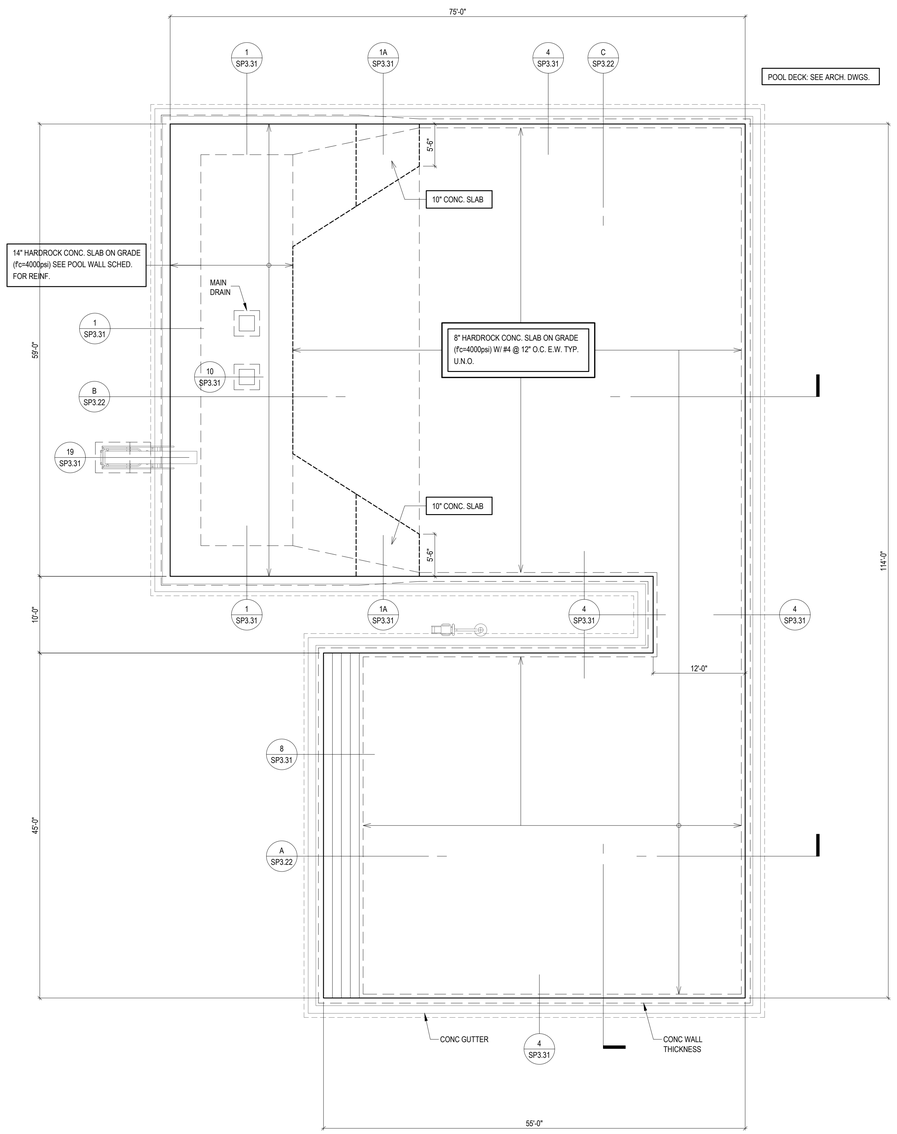

NOTES:

1. FOR GENERAL STRUCTURAL NOTES, SEE SHEET SP3.11 THRU SP3.12.
2. FOR TYPICAL DETAILS SEE SHEET SP3.13.
3. ~~1'-0" MIN OVER-EXCAVATION BELOW BOTTOM OF FOOTING.~~ SEE GEOTECHNICAL REPORT FOR REQUIREMENTS.
4. SEE ARCHITECTURAL DRAWINGS FOR POOL APPURTENANCES & OTHER INFORMATION.

LEGEND:

1. _ _ _ _ _ _ _ _ INDICATES SWIMMING POOL CONC. WALL ALONG PERIMETER.

POOL FOUNDATION PLAN

SCALE: 1/8"=1'-0"

DIGALERT
DIAL TOLL FREE
1-800-422-4133
AT LEAST TWO DAYS BEFORE YOU DIG
UNDERGROUND SERVICE ALERT OF SOUTHERN CALIFORNIA

BASIS OF BEARINGS:

BEARINGS SHOWN HEREON ARE BASED ON THE CENTERLINE OF 162 ND STREET (FORMERLY MARKET STREET) BEING N 89° 55' 30" E SHOWN ON TRACT NO. 10901, M.B. 254/31-32

BENCHMARK:

THE CITY OF GARDENA BENCHMARK NO. 5D-15 ELEV. = 43.508

PREPARED BY:

COFFMAN ENGINEERS
16133 Ventura Boulevard, Suite 1010
Encino, CA 91436
ph 818.285.2650
www.coffman.com
CEI Job# 222224

PREPARED UNDER THE SUPERVISION OF:

RJM DESIGN GROUP
31591 Camino Capistrano
San Juan Capistrano, CA 92675
www.RJMdesigngroup.com
[949] 493-2690 fax
[949] 493-2600 phone

REVISIONS

NO.	DESCRIPTION	DATE	APPROVED
1	90% CD SUBMITTAL	10/02/2023	
2	100% CD SUBMITTAL	10/02/2023	
3	FINAL SUBMITTAL	10/02/2023	

CITY OF GARDENA
DEPARTMENT OF PUBLIC WORKS - ENGINEERING

POOL FOUNDATION PLAN

COMMUNITY AQUATICS & SENIOR CENTER
SP3.21

	INITIAL	DATE
DESIGNED BY	JNP	04/18/23
DRAWN BY	JNP	04/20/23
CHECKED BY	PVS	04/20/23

APPROVED BY:

DATE DIRECTOR OF PUBLIC WORKS

SHT. 166 OF 195 DWG. NO. S-2606

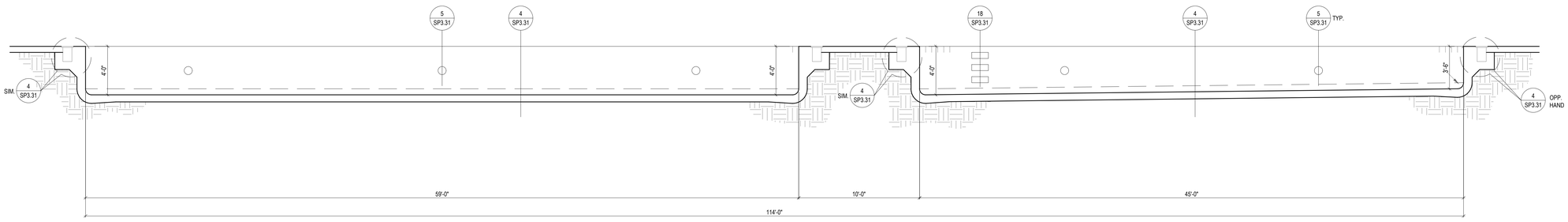

C POOL SECTION

1/4"=1'-0"

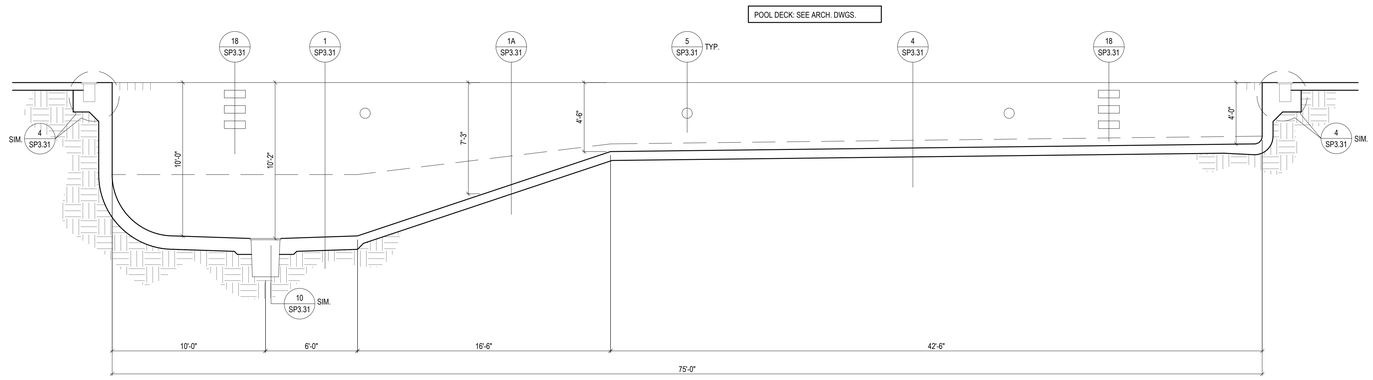

B POOL SECTION

1/4"=1'-0"

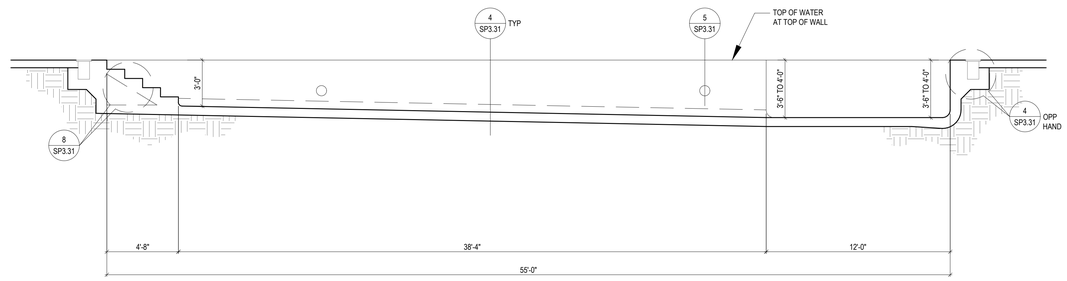

A POOL SECTION

1/4"=1'-0"

DIGALERT
DIAL TOLL FREE
1-800-422-4133
AT LEAST TWO DAYS
BEFORE YOU DIG
UNDERGROUND SERVICE ALERT OF SOUTHERN CALIFORNIA

BASIS OF BEARINGS:

BEARINGS SHOWN HEREON ARE BASED ON THE CENTERLINE OF 162 ND STREET (FORMERLY MARKET STREET) BEING N 89° 55' 30" E SHOWN ON TRACT NO. 10901, M.B. 254/31-32

BENCHMARK:

THE CITY OF GARDENA BENCHMARK NO. 5D-15 ELEV. = 43.508

PREPARED BY:

COFFMAN ENGINEERS
16133 Ventura Boulevard, Suite 1010
Encino, CA 91436
ph 818.285.2650
www.coffman.com
CEI Job# 222224

PREPARED UNDER THE SUPERVISION OF:

RJM DESIGN GROUP
31591 Camino Capistrano
San Juan Capistrano, CA 92675
www.RJMdesigngroup.com
[949] 493-2690 fax
[949] 493-2600 phone

REVISIONS

NO.	DESCRIPTION	DATE	APPROVED
1	90% CD SUBMITTAL	10/02/2023	
2	100% CD SUBMITTAL	10/02/2023	
3	FINAL SUBMITTAL	10/02/2023	

CITY OF GARDENA
DEPARTMENT OF PUBLIC WORKS - ENGINEERING

POOL SECTIONS

COMMUNITY AQUATICS & SENIOR CENTER

SP3.22

	INITIAL	DATE
DESIGNED BY	JNP	04/18/23
DRAWN BY	JNP	04/20/23
CHECKED BY	PVS	04/30/23

APPROVED BY:

DATE DIRECTOR OF PUBLIC WORKS

SHT. 167 OF 195 DWG. NO. S-2606

PLOT DATE: 10/2/2023

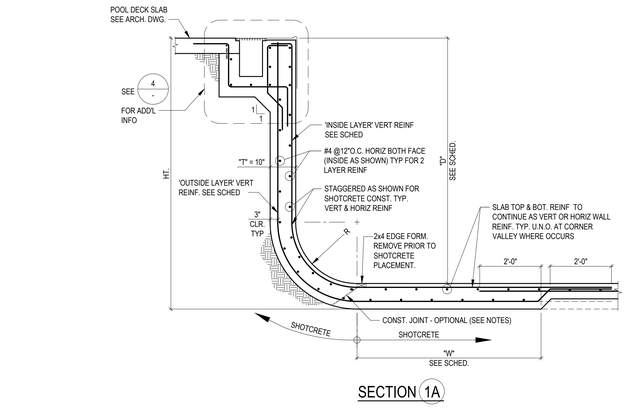

SECTION 1A

SHOTCRETE POOL WALL SCHEDULE						
MAX. DEPTH OF WATER "D" (FT)	WALL THICKNESS "T" (IN.)	BENT RADIUS (FT)	FTG WIDTH "W" (FT)	VERT WALL REINF		
				OUTSIDE LAYER	CENTER	INSIDE LAYER
3.0	8	0.5	1	-	#5 @ 12"	-
3.5	8	0.5	2	-	#5 @ 12"	-
4.5	8	0.5	3	-	#5 @ 12"	-
7.25	10	2	8	#7 @ 6"	-	#5 @ 12"
10	14	4	12	#7 @ 4" ●	-	#5 @ 12"

● FULL HT. BARS @ 12" O.C.
SEE SECTION 1 & 11

3 POOL WALL SCHEDULE

NO SCALE

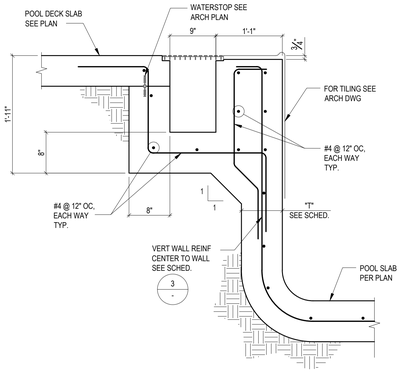

4 POOL GUTTER/WALL SECTION

1"=1'-0"

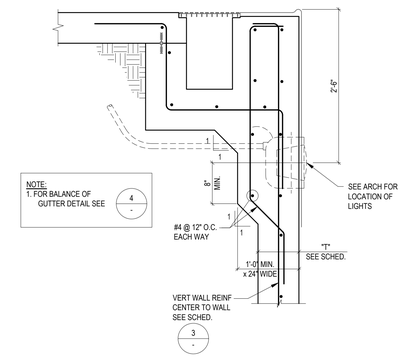

5 SECTION AT POOL LIGHT

1"=1'-0"

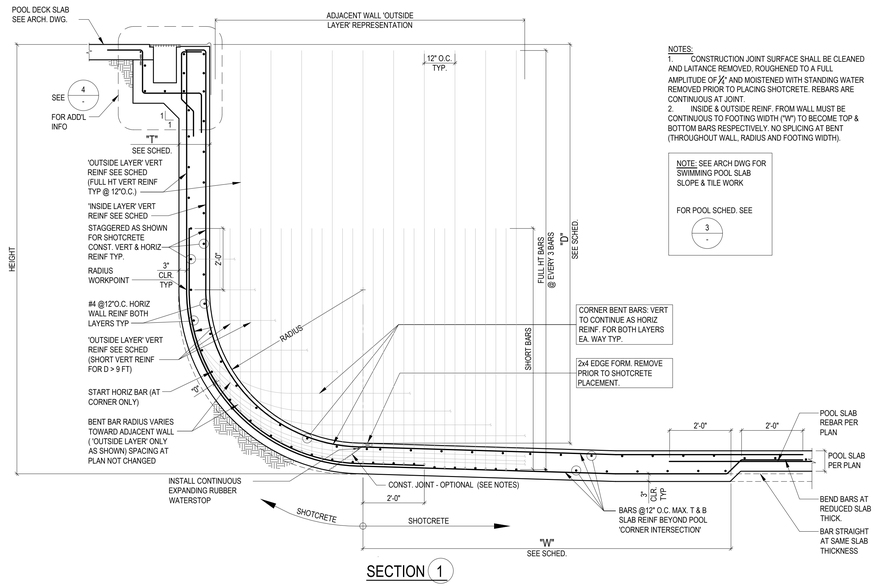

SECTION 1

NOTES:
1. CONSTRUCTION JOINT SURFACE SHALL BE CLEANED AND LAITANCE REMOVED, ROUGHENED TO A FULL AMPLITUDE OF ¼" AND MOISTENED WITH STANDING WATER REMOVED PRIOR TO PLACING SHOTCRETE. REBARS ARE CONTINUOUS AT JOINT.
2. INSIDE & OUTSIDE REINF. FROM WALL MUST BE CONTINUOUS TO FOOTING WIDTH ("W") TO BECOME TOP & BOTTOM BARS RESPECTIVELY. NO SPLICING AT BENT (THROUGHOUT WALL, RADIUS AND FOOTING WIDTH).

NOTE: SEE ARCH DWG FOR SWIMMING POOL SLAB SLOPE & TILE WORK.

FOR POOL SCHED. SEE 3 -

1 MAIN POOL WALL SECTION

1/2"=1'-0"

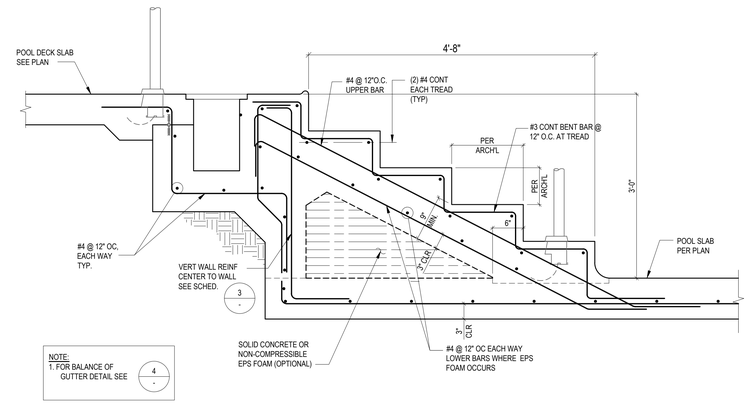

8 POOL STAIRS SECTION

1"=1'-0"

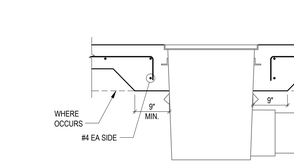

NOTE: SEE ARCH DWGS FOR DRAIN, GRATING AND DIMS.

10 MAIN DRAIN DETAIL

3/4"=1'-0"

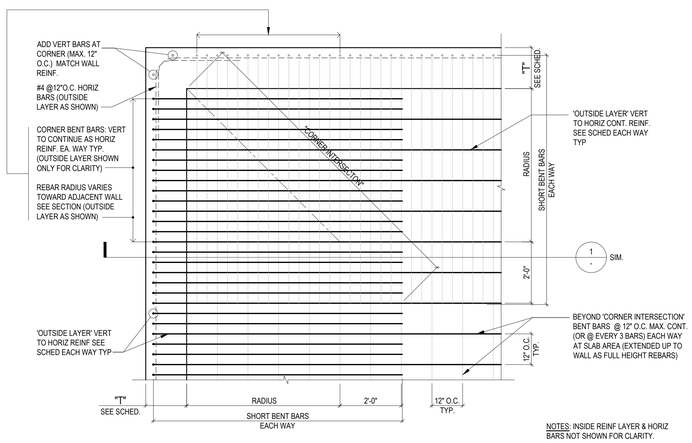

NOTES: INSIDE REINF LAYER & HORIZ BARS NOT SHOWN FOR CLARITY.

11 PLAN AT CORNER DEEP END OF POOL OUTSIDE LAYER BENT EA WAY AS SHOWN

1/2"=1'-0"

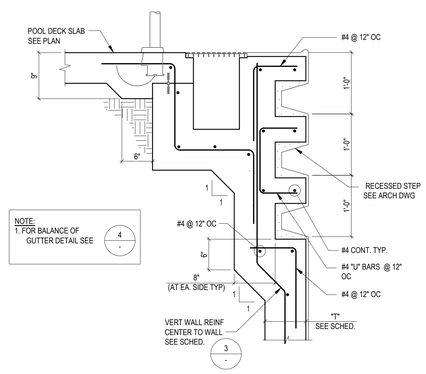

18 SECTION @ EMBED STEPS

1"=1'-0"

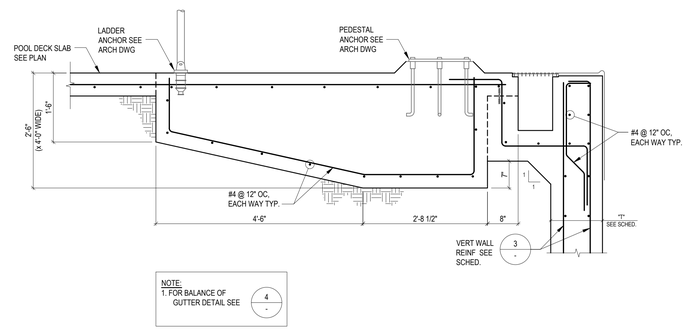

NOTE:
SEE ARCH'L FOR DIVING STAND DETAILS

19 DIVING STAND PAD DETAIL

3/4"=1'-0"

DIGALERT
DIAL TOLL FREE
1-800-422-4133
AT LEAST TWO DAYS
BEFORE YOU DIG
UNDERGROUND SERVICE ALERT OF SOUTHERN CALIFORNIA

BASIS OF BEARINGS:
BEARINGS SHOWN HEREON ARE BASED ON THE CENTERLINE OF 162 ND STREET (FORMERLY MARKET STREET) BEING N 89° 55' 30" E SHOWN ON TRACT NO. 10901, M.B. 254/31-32

BENCHMARK:
THE CITY OF GARDENA BENCHMARK NO. 5D-15 ELEV. = 43.508

PREPARED BY:
COFFMAN ENGINEERS
16133 Ventura Boulevard, Suite 1010
Encino, CA 91436
ph 818.285.2650
www.coffman.com
CEI Job# 222224

PREPARED UNDER THE SUPERVISION OF:
RJM DESIGN GROUP
31591 Camino Capistrano
San Juan Capistrano, CA 92675
www.RJMdesigngroup.com
[949] 493-2690 fax
[949] 493-2600 phone

REVISIONS

NO.	DESCRIPTION	DATE	APPROVED
1	90% CD SUBMITTAL	10/02/2023	
2	100% CD SUBMITTAL	10/02/2023	
3	FINAL SUBMITTAL	10/02/2023	

CITY OF GARDENA
DEPARTMENT OF PUBLIC WORKS - ENGINEERING
POOL DETAILS
COMMUNITY AQUATICS & SENIOR CENTER
SP3.31

	INITIAL	DATE
DESIGNED BY	JNP	04/18/23
DRAWN BY	JNP	04/20/23
CHECKED BY	PVB	04/20/23

APPROVED BY:
DATE
DIRECTOR OF PUBLIC WORKS
SHT. 168 OF 195
DWG. NO. S-2606

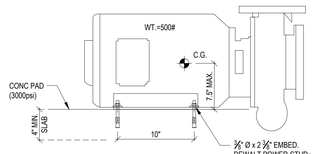

ELEVATION

3 PUMP ANCHORAGE (TYP)

1 1/2"=1'-0"

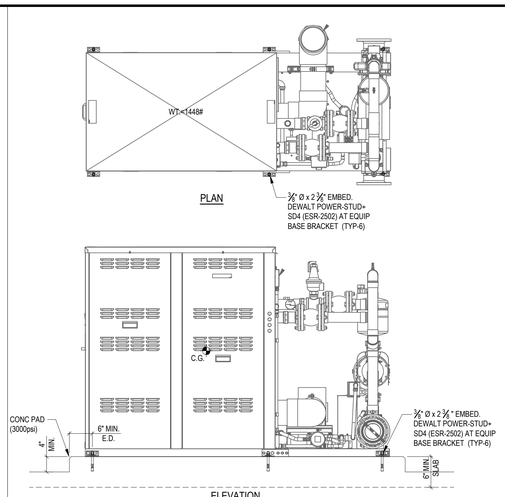

PLAN

ELEVATION

4 POOL HEATER ANCHORAGE

3/4"=1'-0"

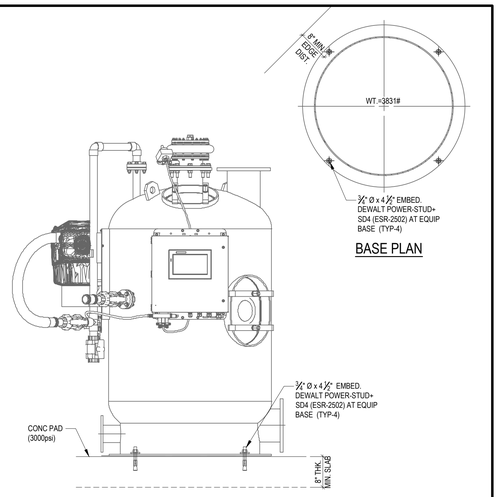

BASE PLAN

5 FILTER TANK ANCHORAGE

3/4"=1'-0"

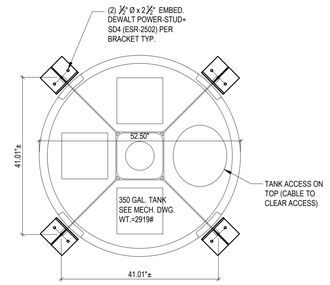

PLAN - ACID TANK

NOTES:
1. FOR BALANCE OF INFO SEE
500 GAL. TANK PLAN

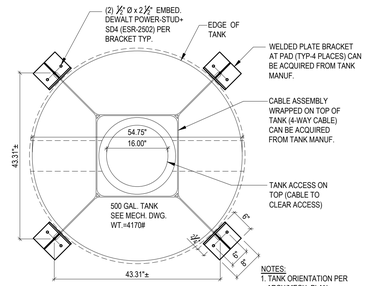

NOTES:
1. TANK ORIENTATION PER
ARCH/MECH. PLAN.

PLAN - CHLORINE TANK

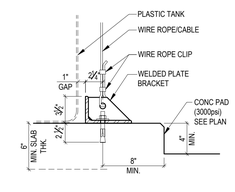

TIE DOWN DETAIL

1½"=1'-0"

9 CHEM STORAGE TANK ANCHORAGE

3/4"=1'-0"

DIGALERT
DIAL TOLL FREE
1-800-422-4133
AT LEAST TWO DAYS
BEFORE YOU DIG
UNDERGROUND SERVICE ALERT OF SOUTHERN CALIFORNIA

BASIS OF BEARINGS:

BEARINGS SHOWN HEREON ARE BASED ON THE CENTERLINE OF 162 ND STREET (FORMERLY MARKET STREET) BEING N 89° 55' 30" E SHOWN ON TRACT NO. 10901, M.B. 254/31-32

BENCHMARK:

THE CITY OF GARDENA BENCHMARK NO. SD-15 ELEV. = 43.508

PREPARED BY:

COFFMAN ENGINEERS
16133 Ventura Boulevard, Suite 1010
Encino, CA 91436
ph 818.285.2650
www.coffman.com
CEI Job# 222224

PREPARED UNDER THE SUPERVISION OF:

RJM DESIGN GROUP
31591 Camino Capistrano
San Juan Capistrano, CA 92675
www.RJMdesigngroup.com
[949] 493-2690 fax
[949] 493-2600 phone

REVISIONS

NO.	DESCRIPTION	DATE	APPROVED
1	90% CD SUBMITTAL	10/02/2023	
2	100% CD SUBMITTAL	10/02/2023	
3	FINAL SUBMITTAL	10/02/2023	

CITY OF GARDENA
DEPARTMENT OF PUBLIC WORKS - ENGINEERING

EQUIP. ANCHORAGE DETAILS

COMMUNITY AQUATICS & SENIOR CENTER

SP3.32

	INITIAL	DATE
DESIGNED BY	JNP	04/18/23
DRAWN BY	JNP	06/20/23
CHECKED BY	FVS	06/30/23

APPROVED BY:

DATE DIRECTOR OF PUBLIC WORKS

SHT. 169 OF 195 DWG. NO. S-2606

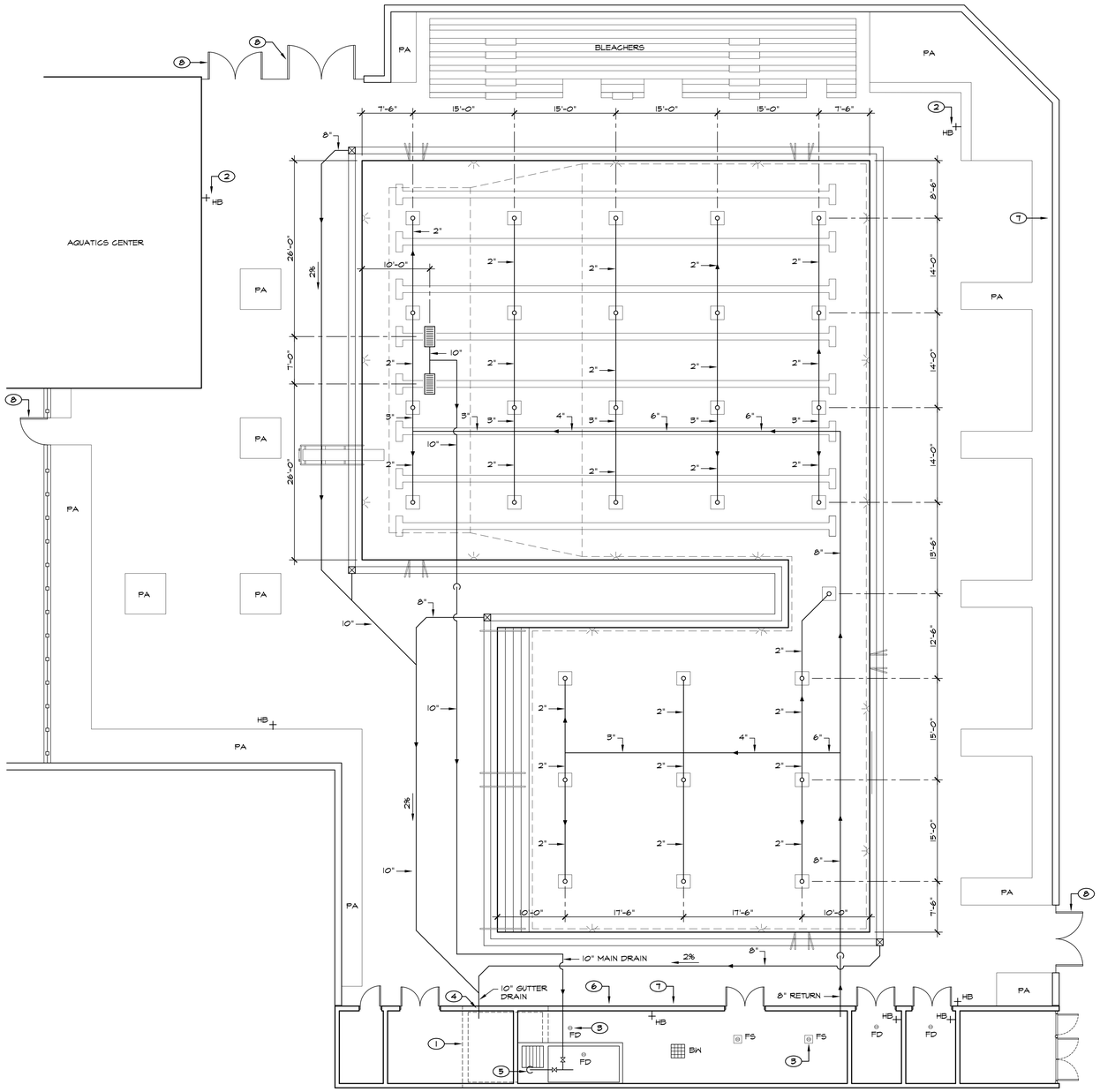

POOL PLUMBING PLAN

SCALE: 1/8" = 1'-0"

NORTH

KEYED NOTES

1. SURGE CHAMBER
2. POTABLE WATER HOSE BIBB W/ VACUUM BREAKER AROUND DECK PERIMETER & INSIDE EQUIPMENT ROOM SPACED SO ALL PARTS OF THE DECK CAN BE REACHED W/ A 75' HOSE, SEE BLDG PLUMBING DWGS & LANDSCAPE DWGS
3. SLOPE CONC EQUIPMENT ROOM FLOOR SLAB 2% TO DRAINS, SEE BLDG PLUMBING DWGS
4. SURGE CHAMBER PIPE PENETRATION (TYP), SEE 4/SP4.3
5. ANCHOR 10" SURGE CHAMBER SUCTION PIPE @ FLOOR, SEE 5/SP4.3
6. MOUNT REQ'D POOL SAFETY SIGNS ON WALL INCLUDING POOL CAPACITY, DIARRHEA, ARTIFICIAL RESPIRATION W/ CPR & EMERGENCY PHONE NUMBER SIGN W/ FACILITY ADDRESS
7. MOUNT RING BUOY W/ THROW LINE & 16' RESCUE POLE W/ BODY HOOK ON WALL (TYP 2 LOCATIONS)
8. MOUNT KEEP CLOSED SIGN ON EXTERIOR SIDE OF ALL GATES

GENERAL NOTES

1. ALL POOL PIPING SHALL BE SCH 80 PVC W/ SOLVENT WELDED JOINTS UNO.
2. LOCATE BURIED PIPING IN TRENCHES W/ SAND BEDDING PER DETAIL 6/SP4.3
3. HYDROSTATICALLY PRESSURE TEST ALL BURIED PIPING @ 80 PSI PRIOR TO BACKFILLING & MAINTAIN 40 PSI PRESSURE THROUGHOUT CONSTRUCTION.
4. USE 45° ELBOWS & WYES IN GUTTER DRAIN LINES AS INDICATED & SLOPE PIPING 2% MIN TO SURGE CHAMBER.

SYMBOLS

SYMBOL	DESCRIPTION	REFERENCE
o	FLOOR INLET (TYP 30)	1/SP4.3
	MAIN DRAIN GRATE (TYP 2)	2/SP4.3
⊠	GUTTER DRAIN (TYP 4)	3/SP4.3

DIGALERT
DIAL TOLL FREE
1-800-422-4133
AT LEAST TWO DAYS BEFORE YOU DIG
UNDERGROUND SERVICE ALERT OF SOUTHERN CALIFORNIA

BASIS OF BEARINGS:
BEARINGS SHOWN HEREON ARE BASED ON THE CENTERLINE OF 162 ND STREET (FORMERLY MARKET STREET) BEING N 89° 55' 30" E SHOWN ON TRACT NO. 10901, M.B. 254/31-32

BENCHMARK:
THE CITY OF GARDENA BENCHMARK NO. 5D-15 ELEV. = 43.508

CITY OF GARDENA
FREEWAY CITY
INCORPORATED 1930

CONSULTANT:
JONES & MADHAVAN
ARCHITECTURE
ENGINEERING
100 EAST THOUSAND OAKS BOULEVARD, SUITE 211
THOUSAND OAKS, CALIFORNIA 91360
TEL 805.777.8449 • FAX 805.777.8489

REGISTERED PROFESSIONAL ENGINEER
JOHN R. JONES
NO. M25446
EXP. 9-30-24
MECHANICAL
STATE OF CALIFORNIA

PREPARED UNDER THE SUPERVISION OF:
RJM DESIGN GROUP
31591 Camino Capistrano
San Juan Capistrano, CA 92675
www.RJMdesigngroup.com
[949] 493-2690 fax
[949] 493-2600 phone

LICENSED LANDSCAPE ARCHITECT
STATE OF CALIFORNIA

REVISIONS

NO.	DESCRIPTION	DATE	APPROVED
1	90% CD SUBMITTAL	12/15/2022	
2	100% CD SUBMITTAL	05/01/2023	
3	FINAL SUBMITTAL	10/02/2023	

CITY OF GARDENA
DEPARTMENT OF PUBLIC WORKS - ENGINEERING

POOL PLUMBING PLAN

COMMUNITY AQUATICS & SENIOR CENTER
SP4.1

	INITIAL	DATE
DESIGNED BY	DJ	10/02/2023
DRAWN BY	JMAE	10/02/2023
CHECKED BY	NM	10/02/2023

APPROVED BY:

DATE DIRECTOR OF PUBLIC WORKS

SHT. 170 OF 195 DWG. NO. 5-2606

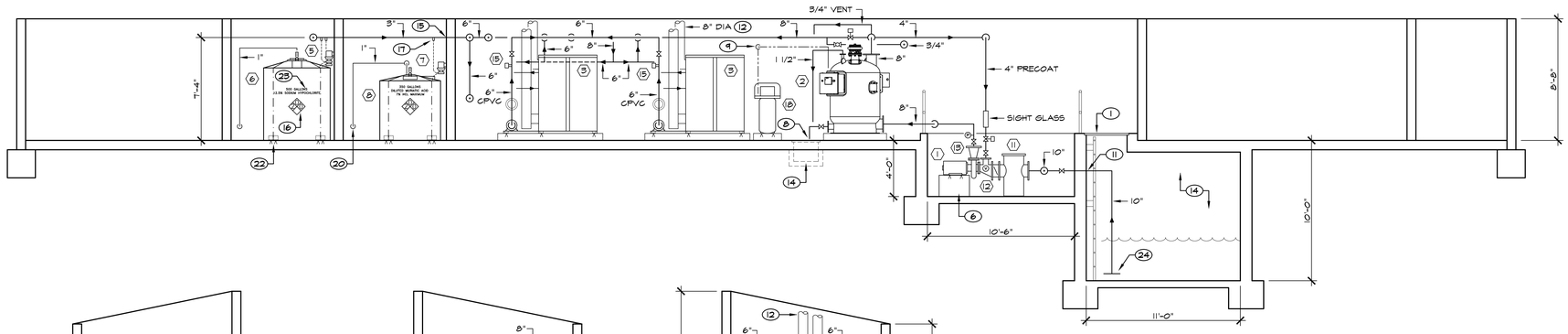

ELEVATION C

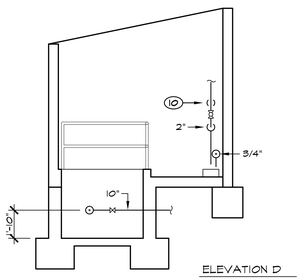

ELEVATION D

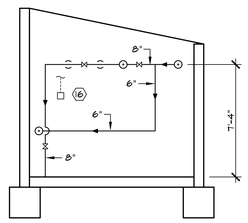

ELEVATION B @ WALL

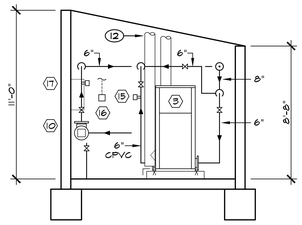

ELEVATION B

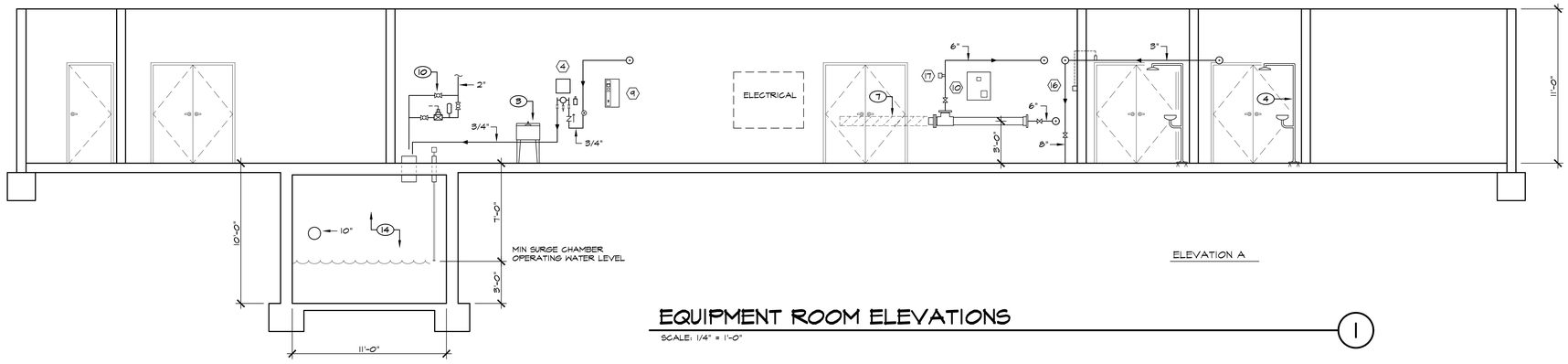

ELEVATION A

EQUIPMENT ROOM ELEVATIONS

SCALE: 1/4" = 1'-0"

(1)

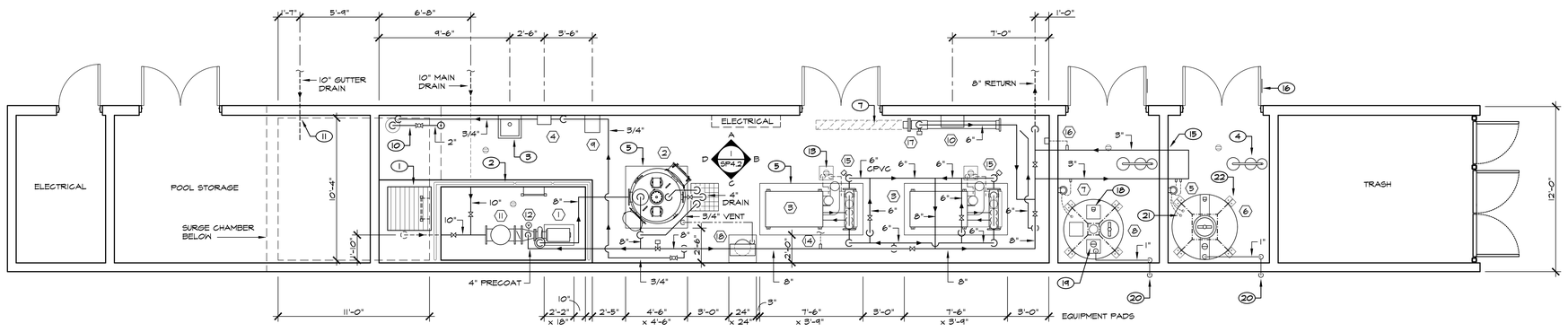

EQUIPMENT ROOM PLAN

SCALE: 1/4" = 1'-0"

NORTH

KEYED NOTES

1. SURGE CHAMBER ACCESS HATCH & LADDER, SEE 10/SP4.3
2. PUMP PIT GUARDRAIL & LADDER, SEE ARCHITECTURAL DWGS
3. UTILITY SINK, SEE BLDG PLUMBING DWGS
4. EYEWASH & SHOWER, SEE BLDG PLUMBING DWGS
5. 6" HIGH CONC EQUIPMENT PAD (TYP)
6. 18" HIGH CONC PUMP PAD
7. MAINTAIN CLEARANCE FOR UV LAMP REMOVAL
8. 1" MIN AIR GAP ON 4" FILTER DRAIN PIPE @ 21" x 21" x 18" DEEP BACKWASH PIT W/ GRATING, SEE 13/SP4.3
9. 1/2" TYPE L COPPER COMPRESSED AIR PIPING W/ BALL VALVE @ FILTER
10. POOL FILL SYSTEM MANIFOLD, SEE 7/SP4.3
11. SURGE CHAMBER PIPE PENETRATION, SEE 4/SP4.3
12. HEATER EXHAUST & COMBUSTION AIR VENTS, SEE 9/SP4.3
13. RUN 3/4" COPPER PRESSURE RELIEF VALVE DISCHARGE & 3/4" PVC CONDENSATE DRAIN LINE TO FLOOR SINK
14. INSTALL XYPEX WATERPROOF COATING ON ALL INTERIOR SURFACES OF SURGE CHAMBER & BACKWASH PIT
15. 1 HOUR PIPE SLEEVE @ CHEMICAL ROOM WALL PENETRATIONS, SEE 12/SP4.3
16. CHEMICAL HAZARD SIGN ON DOOR & TANKS, SEE 1/SP4.4
17. CHEMICAL PUMP INJECTION, SEE 2/SP4.4
18. TANK FILL PORT W/ CAM ACTION COUPLER, SEE 3/SP4.4
19. TANK LEVEL GAUGE, SEE 4/SP4.4
20. 1" TANK VENT LINE TO OUTSIDE OF BLDG, SEE 5/SP4.4
21. 3/8" SUCTION TUBING THROUGH BULKHEAD FITTING, SEE 6/SP4.4
22. CHEMICAL TANK ANCHOR BRACKETS & CABLE
23. PLASTIC LABEL W/ 1 1/2" HIGH LETTERS ON EA TANK
24. ANCHOR 10" SURGE CHAMBER SUCTION PIPE @ FLOOR, SEE 5/SP4.3

GENERAL NOTES

1. ALL POOL PIPING SHALL BE SCH 80 PVC W/ SOLVENT WELDED JOINTS UNO.
2. ALL PVC FITTINGS IN EQUIPMENT ROOM SHALL BE MOLDED TO MEET DIMENSIONAL REQUIREMENTS.
3. ALL PIPING SHALL BE RESTRAINED PER SMACNA SEISMIC GUIDELINES W/ LATERAL SEISMIC BRACING. PROVIDE PIPE HANGERS OR SUPPORTS ADJACENT TO MECHANICAL EQUIPMENT & @ 8' MAX INTERVALS, SEE 8/SP4.3
4. PROVIDE 6'-8" MIN CLEARANCE UNDER OVERHEAD PIPING.
5. BOND PUMP, HEATERS & UV SYSTEM TO POOL SHELL REINFORCING GRID, SEE 15/SP2.1
6. PROVIDE 15 DIA MIN OF STRAIGHT PIPE BEFORE FLOW SENSORS & 5 DIA AFTER.
7. PLUMB EA POOL HEATER W/ BYPASS LOOP & ISOLATION VALVES AS SHOWN.
8. INSTALL SHUT-OFF VALVE, SERVICE UNION & DRIP LEG ON GAS LINE @ HEATERS.
9. INSTALL EQUIPMENT LABELS, PIPE FLOW ARROWS, PIPE LABELS, VALVE TAGS & VALVE CHART.
10. RESTRICT MAIN DRAIN BUTTERFLY VALVE TO PROVIDE 80% FLOW OVER GUTTER.
11. RESTRICT POOL RETURN VALVE TO APPLY BACK PRESSURE ON MECHANICAL SYSTEMS.
12. CIRCULATION PUMP VFD SHALL MAINTAIN CONSTANT FLOW RATE BASED ON 4-20 MILLIAMP SIGNAL FROM FLOW SENSOR W/ INTERLOCK TO FILTER CONTROL PANEL FOR BUMPING OPERATION.
13. THE REQUIRED TURNOVER RATE OF 850 GPM SHALL BE PERMANENTLY LABELED ON VFD CONTROL PANEL.
14. CHEMICAL CONTROLLER SHALL CONTROL CHLORINE & ACID PUMPS W/ SAFETY FLOW SWITCH TO DISABLE FEED PUMPS UPON LOSS OF FLOW. UNIT SHALL ALSO CONTROL POOL WATER LEVEL.
15. INTERLOCK HEATERS W/ CIRCULATION PUMP TO ONLY FIRE WHEN PUMP IS RUNNING.
16. INTERLOCK UV SYSTEM TO OPERATE CONTINUOUSLY W/ CIRCULATION PUMP.
17. TIME CLOCK IN FILTER CONTROL PANEL SHALL OPERATE CIRCULATION PUMP W/ FIREMAN SWITCH FOR HEATER COOL DOWN.
18. RUN 1 1/2" FILTER TANK VENT & 3/4" SYSTEM VENT LINES TO BACKWASH PIT PER MFR'S INSTRUCTIONS.
19. INSTALL POLYETHYLENE TUBING FROM FILTER CONTROLLER TO PNEUMATIC VALVES PER MFR'S INSTRUCTIONS.
20. SEE STRUCTURAL DWGS FOR EQUIPMENT ANCHORING DETAILS.

EQUIPMENT SCHEDULE

1. CIRCULATION PUMP - 20 HP, 480V, 3Ø, 1,760 RPM W/ 850 GPM @ 65', 5"x4", PACO #40457 LC
2. FILTER SYSTEM - 700 SQ FT, PERLITE MEDIA, FIBERGLASS TANK, 120V CONTROLLER, AQUIFY #PMF-42-700-FRP
3. HEATER - 1,500,000 BTU W/ 120V, 1Ø PUMPS, 360 GPM, RAYPAK XTHERM INDIRECT #1505A (TYP 2)
4. CHEMICAL CONTROLLER & SENSOR CELL - 120V, 1Ø, CHEMTROL #PC3000
5. CHLORINE PUMP - 120 GPD, 120V, 1Ø, STENNER #170DM4
6. CHLORINE STORAGE TANK - 500 GALLON DOUBLE WALL W/ 16" NON-VENTED MANWAY, CHEM-TAINER #TC597IDC
7. ACID PUMP - 85 GPD, 120V, 1Ø, STENNER #85M5
8. ACID STORAGE TANK - 350 GALLON DOUBLE WALL W/ 16" NON-VENTED MANWAY, CHEM-TAINER #TC5256DC
9. VARIABLE FREQUENCY DRIVE - 480V, 20 HP W/ FUSED DISCONNECT, PENTAIR ACU DRIVE X5
10. UV SYSTEM - 566 GPM CAPACITY, 1.28 KW, 240V, 1Ø, PENTAIR #CLP64AB-XN
11. STRAINER - 10"x10" FIBERGLASS W/ SST BASKET, AQUIFY #STR-1010-FRP
12. PRECOAT TEE - 10"x5"x4" ECCENTRIC FIBERGLASS TEE W/ 10" CHECK VALVE, AQUIFY #TEE-100504-FRP
13. CONCENTRIC REDUCER - 8"x4" FIBERGLASS, AQUIFY #RDC-0804-FRP
14. FLOW SENSOR - 8" MAGNETIC SENSOR, 24V W/ DISPLAY & 4 TO 20 mA OUTPUT, SIGNET #2551
15. HEATER FLOW METER - 6" DIGITAL PIPE MOUNT METER & SENSOR FOR 360 GPM, SIGNET #8150 & 515 (TYP 2)
16. CHEMICAL BYPASS FLOW METER - 3" DIGITAL WALL MOUNT METER & SENSOR FOR 100 GPM, SIGNET #8150 & 515
17. UV FLOW METER - 6" DIGITAL PIPE MOUNT METER & SENSOR FOR 550 GPM, SIGNET #8150 & 515
18. AIR COMPRESSOR - 2 HP, 120V, 1Ø, 20 GAL TANK, INGERSOLL RAND #P1.5IU-A9

FIRE CODE DATA

CHEMICAL STORAGE COMPLIANCE: MAXIMUM ALLOWABLE AMOUNT PER CFC TABLE 5003.1.1(2)

	ACID ROOM	CHLORINE ROOM
a. CHEMICAL	7% HYDROCHLORIC ACID HCl	12.5% SODIUM HYPOCHLORITE NaOCl
b. FORM	LIQUID	LIQUID
c. CAS NUMBER	7647-01-0	7681-52-9
d. HEALTH HAZARD	IRRITANT	IRRITANT
e. PHYSICAL HAZARD	NONE	NONE
f. ALLOWABLE AMOUNT IN USE & STORAGE	NO LIMIT CLOSED SYSTEM	NO LIMIT CLOSED SYSTEM
g. PROPOSED AMOUNT IN USE & STORAGE	350 GALLONS	500 GALLONS

SYMBOLS

- M – BUTTERFLY VALVE
- N – CHECK VALVE
- BALL VALVE
- BUTTERFLY VALVE W/ ACTUATOR
- PRESSURE GAUGE
- VACUUM GAUGE
- Y-STRAINER
- RISER DOWN
- RISER UP
- TEE DOWN
- DIRECTION OF FLOW

DIGALERT
DIAL TOLL FREE 1-800-422-4133
AT LEAST TWO DAYS BEFORE YOU DIG
UNDERGROUND SERVICE ALERT OF SOUTHERN CALIFORNIA

BASIS OF BEARINGS:

BEARINGS SHOWN HEREON ARE BASED ON THE CENTERLINE OF 162 ND STREET (FORMERLY MARKET STREET) BEING N 89° 55' 30" E SHOWN ON TRACT NO. 10901, M.B. 254/31-32

BENCHMARK:

THE CITY OF GARDENA BENCHMARK NO. 5D-15 ELEV. = 43.508

CONSULTANT:

JONES & MADHAVAN ARCHITECTURE ENGINEERING
100 EAST THOUSAND OAKS BOULEVARD, SUITE 211
THOUSAND OAKS, CALIFORNIA 91360
TEL 805.777.8449 + FAX 805.777.8489

REGISTERED PROFESSIONAL ENGINEER — DONALD R. KOHLS — NO. M25446 — EXP. 9-30-24 — MECHANICAL — STATE OF CALIFORNIA

PREPARED UNDER THE SUPERVISION OF:

RJM DESIGN GROUP
31591 Camino Capistrano
San Juan Capistrano, CA 92675
www.RJMdesigngroup.com
[949] 493-2690 fax
[949] 493-2690 phone

REGISTERED LANDSCAPE ARCHITECT — STATE OF CALIFORNIA — 07-31-2023 RENEWAL DATE — 07-31-2023 EXPIRATION DATE

REVISIONS

NO.	DESCRIPTION	DATE	APPROVED
1	90% CD SUBMITTAL	12/15/2022	
2	100% CD SUBMITTAL	05/01/2023	
3	FINAL SUBMITTAL	10/02/2023	

CITY OF GARDENA
DEPARTMENT OF PUBLIC WORKS - ENGINEERING

EQUIPMENT ROOM PLAN & ELEVATIONS

COMMUNITY AQUATICS & SENIOR CENTER

SP4.2

	INITIAL	DATE
DESIGNED BY	DJ	10/02/2023
DRAWN BY	JMAE	10/02/2023
CHECKED BY	NM	10/02/2023

APPROVED BY:

DATE

DIRECTOR OF PUBLIC WORKS

SHT. 171 OF 195 DWG. NO. 5-2606

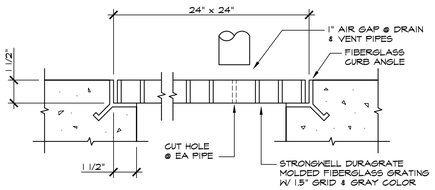

BACKWASH PIT GRATING 13

SCALE: 3" = 1'-0"

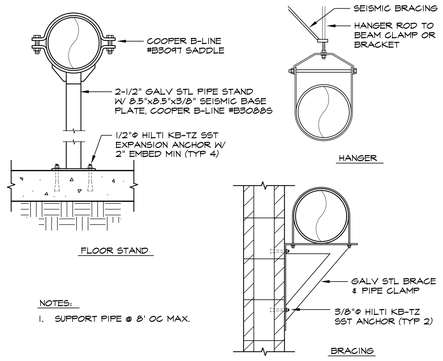

PIPE SUPPORT 8

SCALE: 1" = 1'-0"

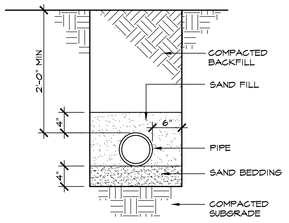

PIPE TRENCH 6

SCALE: 1" = 1'-0"

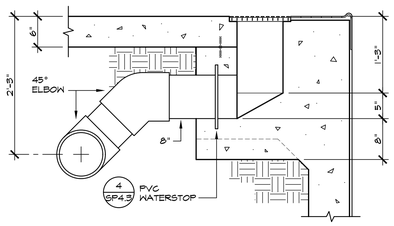

GUTTER DRAIN 3

SCALE: 1" = 1'-0"

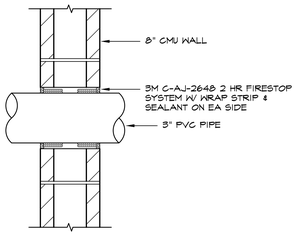

PIPE WALL PENETRATION 12

SCALE: 1 1/2" = 1'-0"

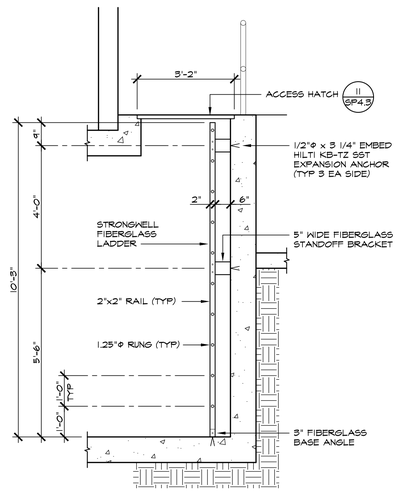

LADDER 10

SCALE: 1/2" = 1'-0"

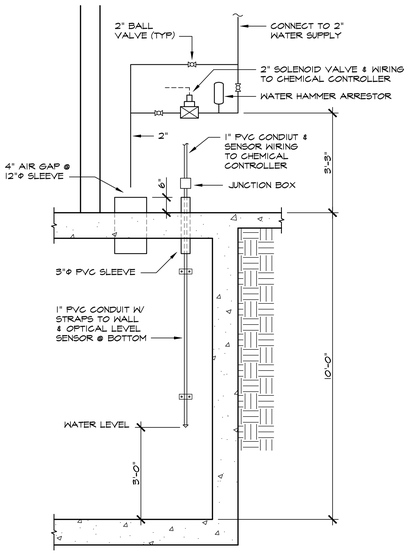

FILL SYSTEM 7

SCALE: 1/2" = 1'-0"

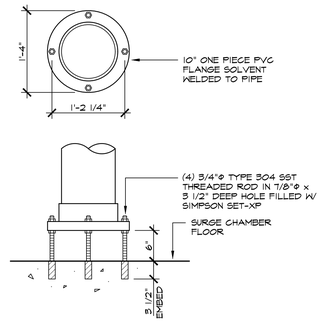

PIPE ANCHOR 5

SCALE: 1" = 1'-0"

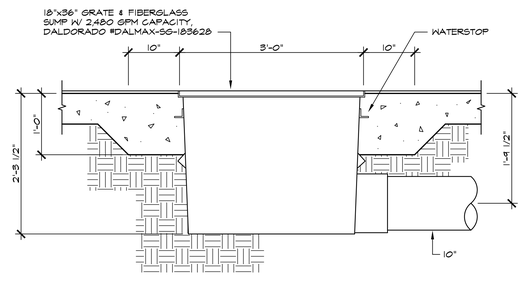

MAIN DRAIN SUMP 2

SCALE: 1" = 1'-0"

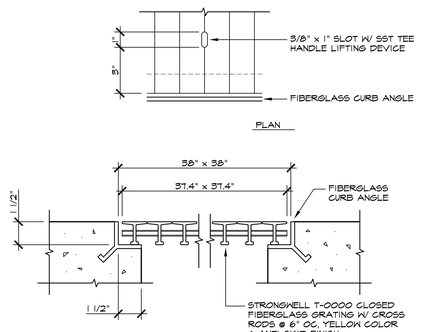

ACCESS HATCH 11

SCALE: 3" = 1'-0"

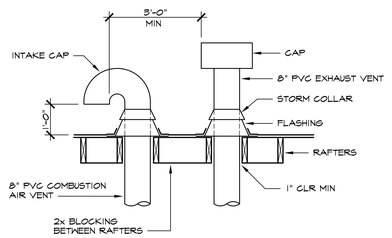

HEATER VENT 9

SCALE: NTS

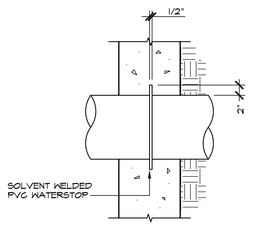

PVC WATERSTOP 4

SCALE: 1" = 1'-0"

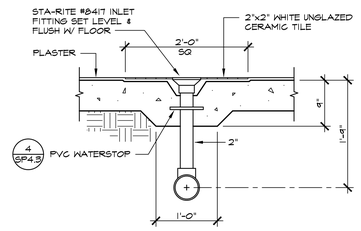

NOTE:

SET INLET CAPS TO 3/4 TURNS OPEN & ADJUST IN 1/4 TURN INCREMENTS FOR EVEN FLOW AFTER STARTING SYSTEM. LOCK IN PLACE W/ SST SCREW.

FLOOR INLET 1

SCALE: 1" = 1'-0"

DIGALERT
DIAL TOLL FREE 1-800-422-4133
AT LEAST TWO DAYS BEFORE YOU DIG
UNDERGROUND SERVICE ALERT OF SOUTHERN CALIFORNIA

BASIS OF BEARINGS:

BEARINGS SHOWN HEREON ARE BASED ON THE CENTERLINE OF 162 ND STREET (FORMERLY MARKET STREET) BEING N 89° 55' 30" E SHOWN ON TRACT NO. 10901, M.B. 254/31-32

BENCHMARK:

THE CITY OF GARDENA BENCHMARK NO. 5D-15 ELEV. = 43.508

CONSULTANT:

JONES & MADHAVAN ARCHITECTURE ENGINEERING
100 EAST THOUSAND OAKS BOULEVARD, SUITE 211
THOUSAND OAKS, CALIFORNIA 91360
TEL 805.777.8449 • FAX 805.777.8489

REGISTERED PROFESSIONAL ENGINEER — RICHARD R. KNOX — No. M25446 — EXP. 9-30-24 — MECHANICAL — STATE OF CALIFORNIA

PREPARED UNDER THE SUPERVISION OF:

RJM DESIGN GROUP
31591 Camino Capistrano
San Juan Capistrano, CA 92675
www.RJMdesigngroup.com
(949) 493-2690 fax
(949) 493-2600 phone

REGISTERED LANDSCAPE ARCHITECT — 2484 — 01/31/2023 — STATE OF CALIFORNIA

REVISIONS			
NO.	DESCRIPTION	DATE	APPROVED
1	90% CD SUBMITTAL	12/15/2022	
2	100% CD SUBMITTAL	05/01/2023	
3	FINAL SUBMITTAL	10/02/2023	

CITY OF GARDENA
DEPARTMENT OF PUBLIC WORKS - ENGINEERING

POOL PLUMBING DETAILS

COMMUNITY AQUATICS & SENIOR CENTER

SP4.3

	INITIAL	DATE
DESIGNED BY	DJ	10/02/2023
DRAWN BY	JAAZ	10/02/2023
CHECKED BY	NM	10/02/2023

APPROVED BY:

DATE DIRECTOR OF PUBLIC WORKS

SHT. 172 OF 195 DWG. NO. 5-2606

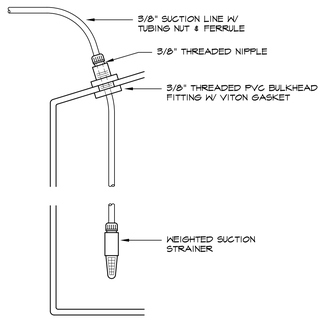

SUCTION LINE

SCALE: 3" = 1'-0" — 6

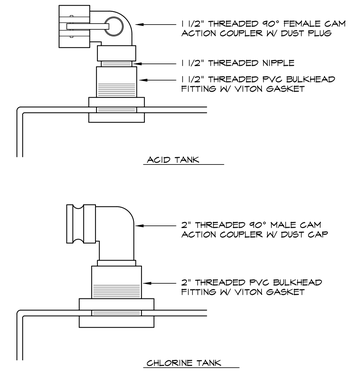

TANK FILL PORT

SCALE: 3" = 1'-0" — 3

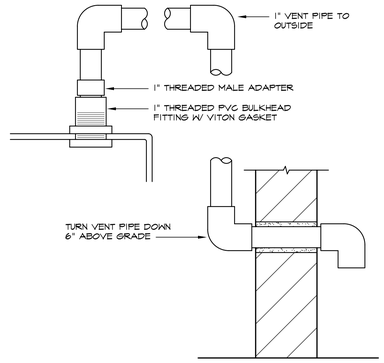

TANK VENT

SCALE: 3" = 1'-0" — 5

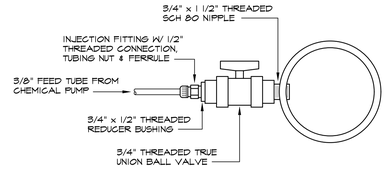

CHEMICAL INJECTION

SCALE: 3" = 1'-0" — 2

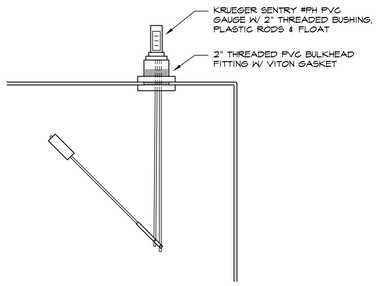

TANK LEVEL GAUGE

SCALE: 1 1/2" = 1'-0" — 4

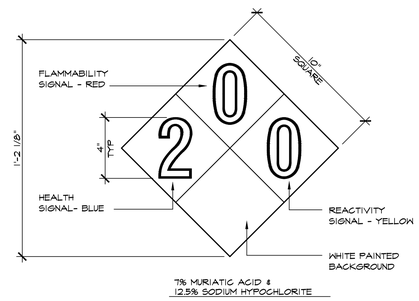

NOTE:
MOUNT ALUMINUM SIGNS 60" AFF ON DOOR & MOUNT SELF-ADHESIVE VINYL SIGNS ON CHEMICAL STORAGE TANKS.

CHEMICAL SIGNS

SCALE: 3" = 1'-0" — 1

DIGALERT
DIAL TOLL FREE
1-800-422-4133
AT LEAST TWO DAYS
BEFORE YOU DIG
UNDERGROUND SERVICE ALERT OF SOUTHERN CALIFORNIA

BASIS OF BEARINGS:

BEARINGS SHOWN HEREON ARE BASED ON THE CENTERLINE OF 162 ND STREET (FORMERLY MARKET STREET) BEING N 89° 55' 30" E SHOWN ON TRACT NO. 10901, M.B. 254/31-32

BENCHMARK:

THE CITY OF GARDENA BENCHMARK NO. 5D-15 ELEV. = 43.508

CONSULTANT:

JONES & MADHAVAN ARCHITECTURE ENGINEERING
100 EAST THOUSAND OAKS BOULEVARD, SUITE 211
THOUSAND OAKS, CALIFORNIA 91360
TEL 805.777.8449 = FAX 805.777.8489

REGISTERED PROFESSIONAL ENGINEER — DAVID R. ROSS — NO. M25446 — EXP. 9-30-24 — MECHANICAL — STATE OF CALIFORNIA

PREPARED UNDER THE SUPERVISION OF:

RJM DESIGN GROUP
31591 Camino Capistrano
San Juan Capistrano, CA 92675
www.RJMdesigngroup.com
(949) 493-2690 fax
(949) 493-2600 phone

REGISTERED LANDSCAPE ARCHITECT — STATE OF CALIFORNIA — 07/31/2025

REVISIONS			
NO.	DESCRIPTION	DATE	APPROVED
1	90% CD SUBMITTAL	12/15/2022	
2	100% CD SUBMITTAL	05/01/2023	
3	FINAL SUBMITTAL	10/02/2023	

CITY OF GARDENA
DEPARTMENT OF PUBLIC WORKS - ENGINEERING

POOL PLUMBING DETAILS

COMMUNITY AQUATICS & SENIOR CENTER

SP4.4

	INITIAL	DATE
DESIGNED BY	DJ	10/02/2023
DRAWN BY	JMAE	10/02/2023
CHECKED BY	NM	10/02/2023

APPROVED BY:

DATE — DIRECTOR OF PUBLIC WORKS

SHT. 173 OF 195 — DWG. NO. 5-2606

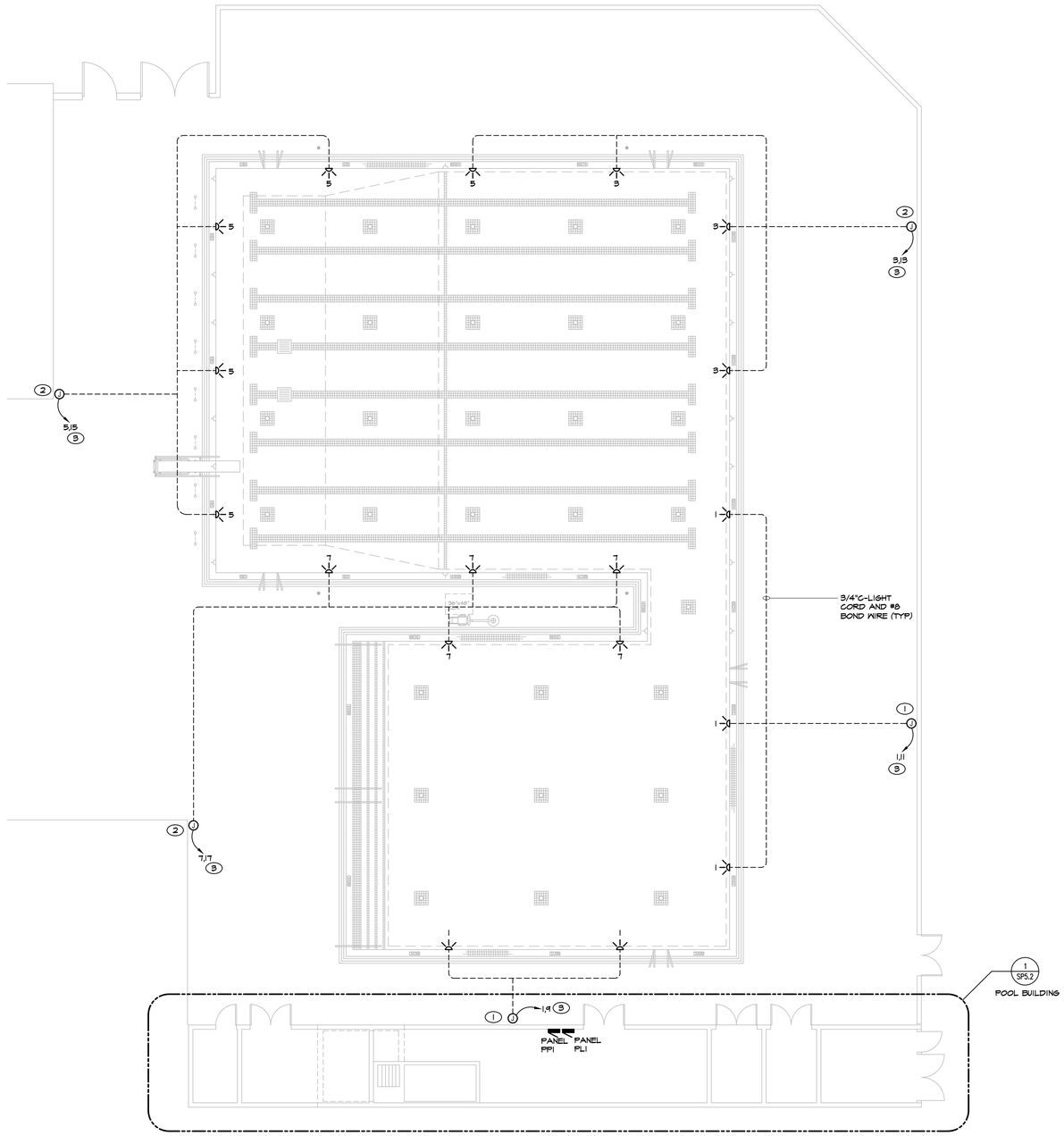

ELECTRICAL POOL PLAN

SCALE: 1/8" = 1'-0"

NORTH

GENERAL NOTES

1. ALL CIRCUITS SHOWN ARE TO PANEL PP1.
2. GROUNDING AND BONDING TERMINALS SHALL BE IDENTIFIED FOR USE IN WET AND CORROSIVE ENVIRONMENTS. FIELD-INSTALLED GROUNDING AND BONDING CONNECTIONS IN A DAMP, WET OR CORROSIVE ENVIRONMENT SHALL BE COMPOSED OF COPPER, COPPER ALLOY, OR STAINLESS STEEL. THEY SHALL BE LISTED FOR DIRECT BURIAL USE.
3. HOMERUNS FOR UNDERWATER LIGHTS AND DECK RECEPTACLES SHALL BE 1"C WITH #10 CONDUCTORS UNLESS NOTED OTHERWISE.
4. EXTERIOR CONDUIT SHALL BE SCH.40 PVC.
5. CONDUCTORS SHALL BE COPPER TYPE THAN/THHN TERMINATED AT 60°C

KEYED NOTES

(1) POOL LIGHT J-BOX. SEE DETAIL 1/SP5.3

(2) POOL LIGHT J-BOX. SEE DETAIL 6/SP5.3

(3) ROUTE POOL LIGHT CIRCUIT THROUGH LIGHTING CONTACTOR. SEE DETAIL 2/SP5.3

SYMBOLS

SYMBOL	DESCRIPTION
	POOL LIGHT
	PANELBOARD
1	JUNCTION BOX
X,#	HOME RUN X=PANELBOARD #=BRANCH CIRCUIT NUMBER

0 10 20 40

SCALE: 1 inch = 20 ft.

DIGALERT
DIAL TOLL FREE
1-800-422-4133
AT LEAST TWO DAYS
BEFORE YOU DIG
UNDERGROUND SERVICE ALERT OF SOUTHERN CALIFORNIA

BASIS OF BEARINGS:

BEARINGS SHOWN HEREON ARE BASED ON THE CENTERLINE OF 162 ND STREET (FORMERLY MARKET STREET) BEING N 89° 55' 30" E SHOWN ON TRACT NO. 10901, M.B. 254/31-32

BENCHMARK:

THE CITY OF GARDENA BENCHMARK NO. 5D-15 ELEV. = 43.508

CONSULTANT:

REGISTERED PROFESSIONAL ENGINEER
KURT J. NIEMAN
No. 13103
ELECTRICAL
STATE OF CALIFORNIA

EXPIRES 6-30-25

COFFMAN ENGINEERS
10 N. Post Street,
Suite 500
Spokane, WA 99201
ph 509.328.2994
www.coffman.com

PREPARED UNDER THE SUPERVISION OF:

RJM DESIGN GROUP
31591 Camino Capistrano
San Juan Capistrano, CA 92675
www.RJMdesigngroup.com
(949) 493-2690 fax
(949) 493-2600 phone

LICENSED LANDSCAPE ARCHITECT
RICHARD J. MICHEL
No. 2500
STATE OF CALIFORNIA
06/30/2025
RENEWAL DATE
5/6/2021
DATE

REVISIONS			
NO.	DESCRIPTION	DATE	APPROVED
1	90% CD SUBMITTAL	12/15/2022	
2	100% CD SUBMITTAL	05/01/2023	
3	FINAL SUBMITTAL	10/02/2023	

CITY OF GARDENA
DEPARTMENT OF PUBLIC WORKS - ENGINEERING

ELECTRICAL POOL PLAN
SP5.1

	INITAL	DATE
DESIGNED BY	KJN	10/02/2023
DRAWN BY	RGS	10/02/2023
CHECKED BY	KJN	10/02/2023

APPROVED BY:

DATE DIRECTOR OF PUBLIC WORKS

SHT. 174 OF 195 DWG. NO. 5-2606

FILE PATH: P:\PCI\137\051\170000 SWIMMING POOL PROJECTS\0 B DWGS\ PHASE 008 GARDENA CASC\ 1\170000-008 - SP5.1.DWG
PLOT DATE & TIME: 10/2/2023 8:11:08 AM

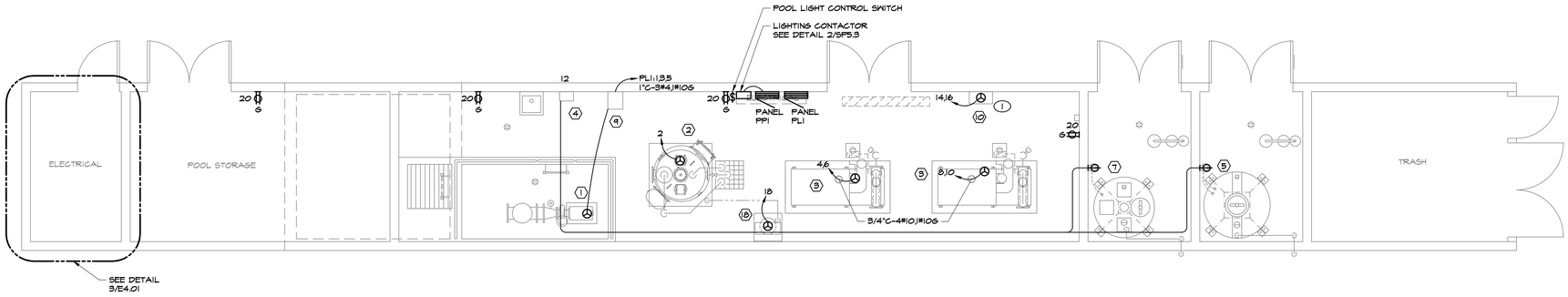

ELECTRICAL POOL EQUIPMENT ROOM PLAN

SCALE: 1/4" = 1'-0"

NORTH

GENERAL NOTES

1. CIRCUIT NUMBERS SHOWN ARE FROM PP1 PANEL UNLESS NOTED OTHERWISE.
2. ALL CIRCUITS ARE 3/4"C-2#12, 1#12G UNLESS NOTED OTHERWISE.
3. GROUNDING AND BONDING TERMINALS SHALL BE IDENTIFIED FOR USE IN WET AND CORROSIVE ENVIRONMENTS. FIELD-INSTALLED GROUNDING AND BONDING CONNECTIONS IN A DAMP, WET, OR CORROSIVE ENVIRONMENT SHALL BE COMPOSED OF COPPER, COPPER ALLOY, OR STAINLESS STEEL. THEY SHALL BE LISTED FOR DIRECT BURIAL USE.
4. INTERIOR CONDUIT SHALL BE RMC OR IMC CONDUIT.
5. CONDUCTORS SHALL BE COPPER TYPE THWN/THHN TERMINATED AT 60°C
6. POOL MOTORS SHALL BE WIRED PER CEC 680.21.

KEYED NOTES

(1) INTERLOCK UV SYSTEM WITH CIRCULATION PUMP

(2) CONTROL WIRING

POOL EQUIPMENT SCHEDULE

(1) CIRCULATION PUMP - 20 HP, 480V, 3PH, 1,760 RPM W/ 850 GPM @ 65', 5"x4", PACO #40457 LC

(2) FILTER SYSTEM - 700 SQ FT, PERLITE MEDIA, FIBERGLASS TANK, 120V CONTROLLER, AQUIFY #PMF-42-700-FRP

(3) HEATER - 1,500,000 BTU W/ 120V, 1PH PUMPS, 360 GPM, RAYPAK XTHERM INDIRECT #1505A (TYP 2)

(4) CHEMICAL CONTROLLER & SENSOR CELL - 120V, 1PH, CHEMTROL #PC3000

(5) CHLORINE PUMP - 120 GPD, 120V, 1PH, STENNER #170DM4

(7) ACID PUMP - 85 GPD, 120V, 1PH, STENNER #85M3

(9) VARIABLE FREQUENCY DRIVE - 480V, 20 HP W/ FUSED DISCONNECT, PENTAIR ACU DRIVE X3

(10) UV SYSTEM - 566 GPM CAPACITY, 1.28 KW, 240V, 1PH, PENTAIR #CLP64A8-XN

(18) AIR COMPRESSOR - 2 HP, 120V, 1PH, 20 GAL TANK, INGERSOLL RAND #P1.5IU-A9

SYMBOLS

- ⊙ – EQUIPMENT CONNECTION
- ⊖ – DUPLEX RECEPTACLE;
  X = AS FOLLOWS;
  G = GROUND FAULT CIRCUIT INTERRUPTER
- ⊖ – SINGLE RECEPTACLE
- (X) – POOL EQUIPMENT TAG
- X:# – HOME RUN
  X=PANELBOARD
  #=BRANCH CIRCUIT NUMBER

SCALE: 1 inch = 20 ft.

PROJECT: GARDENA CASC POOL — PP1
Location: Feed-Thru to: Date: 5/1/2023

Ckt	Description	Phase	Amp	Poles	Notes	Ckt Totals
1	SOUTH POOL LIGHTS	A	20	1	1	0.25
3	NORTH POOL LIGHTS	B	20	1	1	0.25
5	NORTHWEST POOL LIGHTS	C	20	1	1	0.20
7	CENTER POOL LIGHTS	A	20	1	1	0.20
9	SE DECK RECEPTACLE	B	20	1	1	1.00
11	EAST DECK RECEPTACLE	C	20	1		1.00
13	NE DECK RECEPTACLE	A	20	1		1.00
15	NW DECK RECEPTACLE	B	20	1		1.00
17	SW DECK RECEPTACLE	C	20	1		1.00
19	SPARE	A	20	1		
21	SPARE	B	20	1		
23	SPARE	C	20	1		
25	SPARE	A	20	1		
27	SPARE	B	20	1		
29	SPARE	C	20	1		
31	SPACE	A				
33	SPACE	B				
35	SPACE	C				
37	SPACE	A				
39	SPACE	B				
41	SPACE	C				
2	POOL FILTER	A	20	1		0.50
4	POOL HEATER 1 CIRCUIT 1	B	25	1		1.90
6	POOL HEATER 1 CIRCUIT 2	C	25	1		1.40
8	POOL HEATER 2 CIRCUIT 1	A	25	1		1.90
10	POOL HEATER 2 CIRCUIT 2	B	25	1		1.40
12	CHEM CONTROLLER	C	20	1		0.50
14	UV SYSTEM	A	20	2		0.65
16	-	B	-	-		0.65
18	AIR COMPRESSOR	C	20	1		1.80
20	POOL BUILDING RECEPTACLES	A	20	1		0.72
22	SPARE	B	20	1		
24	SPARE	C	20	1		
26	SPARE	A	20	1		
28	SPARE	B	20	1		
30	SPARE	C	20	1		
32	SPACE	A				
34	SPACE	B				
36	SPACE	C				
38	SPACE	A				
40	SPACE	B				
42	SPACE	C				

Specifications

Voltage (L-L):	208
Phase/Wire:	3PH / 4W
Bus Current Rating (Amps):	125
Bus Material:	CU/AL
Short Circuit Current Rating (Amps)	14kAIC
Main Type:	MCB
Main Rating:	125
Neutral Type:	FULL
Mounting/Encl.:	SURFACE NEMA 1

2019 CEC Sections Used in Demand Calculations

Factor #	NEC Reference	Notes
1	TBL 220.44 Receptacles ND	1st 10k @100%, Remainder @50%
2	TBL 220.42 Apartments General Lighting	1st 20k@50%, 20-100k @40%, >100k @30%
3	430.24 Motors	Largest @125% Remainder @100%
4	210.19(A)1 Cont Loads	125%
5	Non-Cont Loads	100%
6	Z20.51 Heating	100%

Feeder Load Breakdown	Conn(KVA)	Dmd Fact
Non-Dwelling Receptacles	5.72	1.00
Dwelling General Illumination	0.00	0.00
Non-Continuous Lighting	0.00	1.00
Continuous Lighting	0.00	1.25
Exterior Lighting	0.90	1.25
Kitchen Appliances	0.00	1.00
Motors	8.90	1.00
Largest Motor (per phase)	1.90	0.25
Fixed Heating	0.00	1.00
Fixed Cooling	0.00	1.00
Non-Diversity Loads	0.00	1.00
Other	1.80	1.00

Connected Feeder Load Summary

	CONN KVA	CONN AMPS	NEC KVA	NEC AMPS
PHASE A:	5.22	43.47	5.81	48.36
PHASE B:	6.20	51.63	6.74	56.10
PHASE C:	5.90	49.13	6.43	53.50
TOTAL:	17.32	48.08	18.97	52.66

Notes: 1. GFI TYPE BREAKER.

Panel Loading: ACCEPTABLE

PROJECT: GARDENA CASC POOL — PL1
Location: Feed-Thru to: Date: 5/1/2023

Ckt	Description	Phase	Amp	Poles	Notes	Ckt Totals
1	POOL CIRC PUMP	A	60	3		7.50
3	20HP	B	-	-		7.50
5	-	C	-	-		7.50
7		A				
9		B				
11		C				
13		A				
15		B				
17		C				
19		A				
21		B				
23		C				
25		A				
27		B				
29		C				
31		A				
33		B				
35		C				
37						
39						
41						
2		A				
4		B				
6		C				
8		A				
10		B				
12		C				
14		A				
16		B				
18		C				
20		A				
22		B				
24		C				
26		A				
28		B				
30		C				
32		A				
34		B				
36		C				
38		A				
40		B				
42		C				

Specifications

Voltage (L-L):	480
Phase/Wire:	3PH / 4W
Bus Current Rating (Amps):	200
Bus Material:	CU/AL
Short Circuit Current Rating (Amps)	10kAIC
Main Type:	MCB
Main Rating:	200
Neutral Type:	FULL
Mounting/Encl.:	SURFACE NEMA 1

2019 CEC Sections Used in Demand Calculations

Factor #	NEC Reference	Notes
1	TBL 220.44 Receptacles ND	1st 10k @100%, Remainder @50%
2	TBL 220.42 Apartments General Lighting	1st 20k@50%, 20-100k @40%, >100k @30%
3	430.24 Motors	Largest @125% Remainder @100%
4	210.19(A)1 Cont Loads	125%
5	Non-Cont Loads	100%
6	220.51 Heating	100%

Feeder Load Breakdown	Conn(KVA)	Dmd Fact
Non-Dwelling Receptacles	0.00	0.00
Dwelling General Illumination	0.00	0.00
Non-Continuous Lighting	0.00	1.00
Continuous Lighting	0.00	1.25
Exterior Lighting	0.00	1.25
Kitchen Appliances	0.00	1.00
Motors	22.50	1.00
Largest Motor (per phase)	7.50	0.25
Fixed Heating	0.00	1.00
Fixed Cooling	0.00	1.00
Non-Diversity Loads	0.00	1.00
Other	0.00	1.00

Connected Feeder Load Summary

	CONN KVA	CONN AMPS	NEC KVA	NEC AMPS
PHASE A:	7.50	27.06	9.38	33.83
PHASE B:	7.50	27.06	9.38	33.83
PHASE C:	7.50	27.06	9.38	33.83
TOTAL:	22.50	27.06	28.13	33.83

Notes:

Panel Loading: ACCEPTABLE

DIGALERT
DIAL TOLL FREE
1-800-422-4133
AT LEAST TWO DAYS BEFORE YOU DIG
UNDERGROUND SERVICE ALERT OF SOUTHERN CALIFORNIA

BASIS OF BEARINGS:

BEARINGS SHOWN HEREON ARE BASED ON THE CENTERLINE OF 162 ND STREET (FORMERLY MARKET STREET) BEING N 89° 55' 30" E SHOWN ON TRACT NO. 10901, M.B. 254/31-32

BENCHMARK:

THE CITY OF GARDENA BENCHMARK NO. 5D-15 ELEV. = 43.508

CONSULTANT:

REGISTERED PROFESSIONAL ENGINEER — KURT A. NIEMAN — No. 13103 — ELECTRICAL — STATE OF CALIFORNIA

EXPIRES 6-30-25

COFFMAN ENGINEERS
10 N. Post Street, Suite 500
Spokane, WA 99201
ph 509.328.2994
www.coffman.com

PREPARED UNDER THE SUPERVISION OF:

RJM DESIGN GROUP
31591 Camino Capistrano
San Juan Capistrano, CA 92675
www.RJMdesigngroup.com
[949] 493-2690 fax
[949] 493-2600 phone

LICENSED LANDSCAPE ARCHITECT — STATE OF CALIFORNIA — 5.31.2023

REVISIONS			
NO.	DESCRIPTION	DATE	APPROVED
1	90% CD SUBMITTAL	12/15/2022	
2	100% CD SUBMITTAL	05/01/2023	
3	FINAL SUBMITTAL	10/02/2023	

CITY OF GARDENA
DEPARTMENT OF PUBLIC WORKS - ENGINEERING

ELECTRICAL POOL EQUIPMENT ROOM PLAN
SP5.2

	INITAL	DATE
DESIGNED BY	KJN	10/02/2023
DRAWN BY	RGS	10/02/2023
CHECKED BY	KJN	10/02/2023

APPROVED BY:

DATE DIRECTOR OF PUBLIC WORKS

SHT. 175 OF 195 DWG. NO. 5-2606

PLOT PATH: P:\JOBS\23\5851\10000 SWIMMING POOL PROJECTS\0 DWGS\PHASE 008 GARDENA CASC\L1\170000-008 - SP5.2.DWG

NOTES:

1. PROVIDE STRAIN RELIEF ON LIGHT CORDS ENTERING JUNCTION BOX.
2. INSTALL IN CONCRETE BENCH OR WALL. SEE LANDSCAPE PLANS.

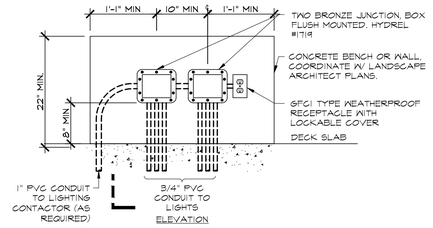

ELEVATION

POOL LIGHT MULTI J-BOX

NOT TO SCALE

6

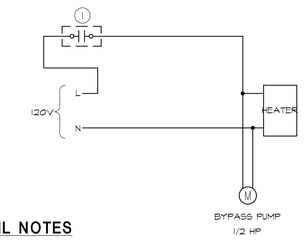

DETAIL NOTES

(1) CIRCULATION PUMP RUN RELAY CONTACT

HEATER CONTROL DIAGRAM (TYP.)

NOT TO SCALE

3

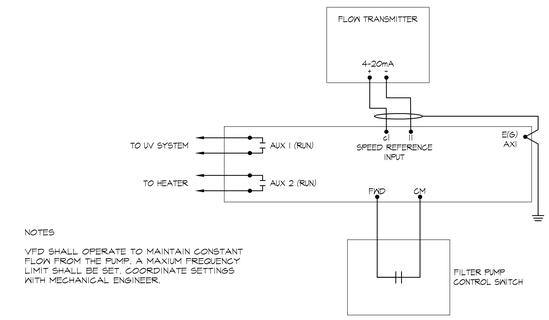

NOTES

VFD SHALL OPERATE TO MAINTAIN CONSTANT FLOW FROM THE PUMP. A MAXIUM FREQUENCY LIMIT SHALL BE SET. COORDINATE SETTINGS WITH MECHANICAL ENGINEER.

CONTROL SCHEMATIC

VARIABLE SPEED DIRVE (VFD)

NOT TO SCALE

5

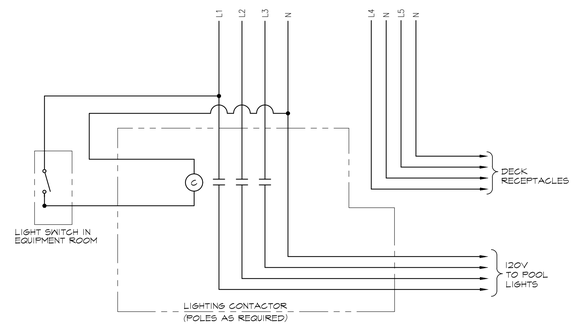

LIGHTING WIRING DIAGRAM

NOT TO SCALE

2

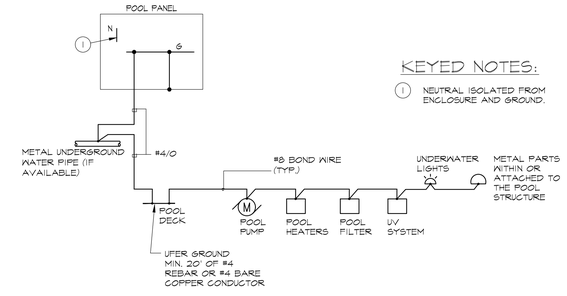

KEYED NOTES:

(1) NEUTRAL ISOLATED FROM ENCLOSURE AND GROUND.

POOL GROUNDING AND BONDING DETAIL

NOT TO SCALE

4

NOTES:

1. PROVIDE STRAIN RELIEF ON LIGHT CORDS ENTERING JUNCTION BOX.
2. INSTALL IN CONCRETE BENCH OR WALL. SEE LANDSCAPE PLANS.

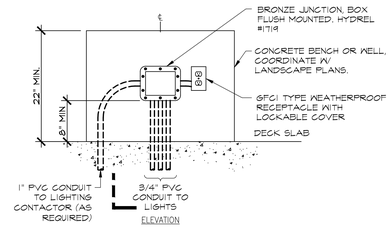

ELEVATION

POOL LIGHT SINGLE J-BOX

NOT TO SCALE

1

0 10 20 40

SCALE: 1 inch = 20 ft.

DIGALERT

DIAL TOLL FREE 1-800-422-4133 AT LEAST TWO DAYS BEFORE YOU DIG

UNDERGROUND SERVICE ALERT OF SOUTHERN CALIFORNIA

BASIS OF BEARINGS:

BEARINGS SHOWN HEREON ARE BASED ON THE CENTERLINE OF 162 ND STREET (FORMERLY MARKET STREET) BEING N 89° 55' 30" E SHOWN ON TRACT NO. 10901, M.B. 254/31-32

BENCHMARK:

THE CITY OF GARDENA BENCHMARK NO. 5D-15 ELEV. = 43.508

CONSULTANT:

REGISTERED PROFESSIONAL ENGINEER KURT J. NINCK No. 13103 ELECTRICAL STATE OF CALIFORNIA

EXPIRES 6-30-25

COFFMAN ENGINEERS

10 N. Post Street, Suite 500
Spokane, WA 99201
ph 509.328.2994

www.coffman.com

PREPARED UNDER THE SUPERVISION OF:

RJM DESIGN GROUP

31591 Camino Capistrano
San Juan Capistrano, CA 92675
www.RJMdesigngroup.com
(949) 493-2690 fax
(949) 493-2600 phone

LICENSED LANDSCAPE ARCHITECT — STATE OF CALIFORNIA

REVISIONS			
NO.	DESCRIPTION	DATE	APPROVED
1	90% CD SUBMITTAL	12/15/2022	
2	100% CD SUBMITTAL	05/01/2023	
3	FINAL SUBMITTAL	10/02/2023	

CITY OF GARDENA
DEPARTMENT OF PUBLIC WORKS - ENGINEERING

ELECTRICAL DETAILS
SP5.3

	INITAL	DATE
DESIGNED BY	KJN	10/02/2023
DRAWN BY	RGS	10/02/2023
CHECKED BY	KJN	10/02/2023

APPROVED BY:

DATE

DIRECTOR OF PUBLIC WORKS

SHT. 176 OF 195 DWG. NO. 5-2606

REF FILES: P:\JOY\21585\1 PROD\SWIMMING POOL PROJECTS\5.0 SWGS\PHASE 008 GARDENA CASC\E1\15000-008 - SP5.3.DWG

FIRE DEPARTMENT PREVENTION REQUIEMENTS

FIRE DEPARTMENT PREVENTION REQUIREMENTS

PHOTOVOLTAIC SYSTEMS (SOLAR POWER) REQUIREMENTS

MAIN SERVICE DISCONNECT:
MARKING SHALL BE PLACED ADJACENT TO THE MAIN SERVICE DISCONNECT IN A LOCATION CLEARLY VISIBLE FROM THE LOCATION WHERE THE LEVEL IS OPERATED.

MARKING CONTENT AND FORMAT: (REFER TO PV-0.03 FOR ADDITIONAL REQUIREMENTS)
- CAUTION: SOLAR ELECTRIC SYSTEM CONNECTED
- RED BACKGROUND
- WHITE LETTERING
- MINIMUM ¾" LETTER HEIGHT
- ALL CAPITAL LETTERS
- ARIAL OR SIMILAR FONT, NON-BOLD
- REFLECTIVE, WEATHER RESISTANT MATERIAL SUITABLE FOR THE ENVIRONMENT

CAUTION: SOLAR ELECTRIC SYSTEM

PV SYSTEM MUST BE MARKED. ALL ELECTRICAL PANELS SHUT-OFFS SHALL BE DESIGNED TO SHUT OFF ALL POWER (SOLAR AND DOMESTIC) AFTER THE PANEL. MARKING IS REQUIRED ON ALL INTERIOR AND EXTERIOR DC CONDUIT, RACEWAYS, ENCLOSURES, CABLE ASSEMBLIES, AND JUNCTION BOXES TO ALERT THE FIRE SERVICES TO AVOID CUTTING THEM. THESE MARKINGS SHALL BE PLACED EVERY 10', AT TURNS AND ABOVE AND/OR BELOW PENETRATIONS AND ALL DC COMBINER AND JUNCTION BOXES. NO MARKINGS ARE REQUIRED FOR AN INVERTER.

- CAUTION: SOLAR ELECTRIC SYSTEM CONNECTED
- RED BACKGROUND
- WHITE LETTERING
- MINIMUM ¾" LETTER HEIGHT
- ALL CAPITAL LETTERS
- ARIAL OR SIMILAR FONT, NON-BOLD
- REFLECTIVE, WEATHER RESISTANT MATERIAL SUITABLE FOR THE ENVIRONMENT

CAUTION: SOLAR CIRCUIT

ACCESS PATHWAYS AND SMOKE VENTILATION.
ACCESS AND SPACING REQUIREMENTS SHOULD BE OBSERVED IN ORDER TO:
- ENSURE ACCESS TO ROOF
- PROVIDE PATHWAYS TO SPECIFIC AREAS OF THE ROOF
- PROVIDE FOR SMOKE VENTILATION OPPORTUNITIES AREA
- PROVIDE EMERGENCY EGRESS FROM THE ROOF

EXCEPTIONS TO THESE REQUIREMENTS MAY BE ALLOWED ON CASE-BY-CASE BASIS.
COMMERCIAL BUILDINGS AND RESIDENTIAL HOUSING COMPRISED OF THREE (3) OR MORE UNITS.

ACCESS:
THERE SHOULD BE A MINIMUM 6-FOOT-WIDE CLEAR PERIMETER AROUND THE EDGES OF THE ROOF.
EXCEPTION: IF EITHER AXIS OF THE BUILDING IS 250' OR LESS, THERE SHOULD BE A MINIMUM OF 4-FEET WIDE CLEAR PERIMETER AROUND THE EDGES OF THE ROOF.

PATHWAYS:
PATHWAYS SHOULD BE ESTABLISHED IN THE DESIGN OF THE SOLAR INSTALLATION. PATHWAYS SHOULD MEET THE FOLLOWING REQUIREMENTS:
- A. SHALL BE OVER STRUCTURAL MEMBER.
- B. CENTERLINE AXIS PATHWAYS SHALL BE PROVIDED IN BOTH AXIS OF THE ROOF. CENTERLINE AXIS PATHWAYS SHOULD RUN ON STRUCTURAL MEMBERS OR OVER THE NEXT CLOSEST STRUCTURALLY MEMBER NEAREST TO THE CENTERLINES OF THE ROOF.
- C. SHALL BE STRAIGHT-LINE NOT LESS THAN 4-FEET CLEAR TO SKYLIGHTS AND/OR VENTILATION HATCHES.
- D. SHALL BE STRAIGHT-LINE NOT LESS THAN 4-FEET CLEAR TO ROOF STANDPIPES.
- E. SHOULD PROVIDE NOT LESS THAN 4-FEET CLEAR PATHWAY TO PARAPET OR ROOF EDGE.

SMOKE VENTILATION:
- A. ARRAYS SHOULD BE NO GREATER THAN 150 FEET BY 150 FEET IN DISTANCE IN EITHER AXIS.
- B. VENTILATION OPTIONS BETWEEN ARRAY SECTIONS SHOULD BE EITHER:
  1. A PATHWAY 8-FEET OR GREATER IN WIDTH.
  2. 4-FEET OR GREATER IN WIDTH PATHWAY AND BORDERING ON THE EXISTING ROOF SKYLIGHTS OR VENTILATION HATCHES.
  3. 4-FEET OR GREATER IN WIDTH PATHWAY AND BORDERING 4-FEET X 8-FEET "VENTING HATCHES" EVERY 20 FEET ON ALTERNATING SIDES OF THE PATHWAY.

LOCATION OF DIRECT CURRENT (DC) CONDUCTORS:
CONDUIT, WIRING SYSTEMS, AND RACEWAYS FOR PHOTOVOLTAIC CIRCUITS SHOULD BE LOCATED AS CLOSE AS POSSIBLE TO THE RIDGE OR HIP OR VALLEY AND FROM THE HIP OR VALLEY AS DIRECTED AS POSSIBLE TO AN OUTSIDE WALL TO REDUCE TRIP HAZARDS AND MAXIMIZE VENTILATION OPPORTUNITIES.

CONDUIT RUNS BETWEEN SUB ARRAYS AND TO DC COMBINER BOXES SHOULD USE DESIGN GUIDELINES THAT MAXIMIZE TOTAL AMOUNT OF CONDUIT ON THE ROOF BY TAKING THE SHORTEST PATH FROM THE ARRAY TO THE DC COMBINER BOX. THE DC COMBINER BOXES ARE TO BE LOCATED SUCH THAT CONDUIT RUNS ARE MINIMIZED IN THE PATHWAYS BETWEEN ARRAYS.

TO LIMIT THE HAZARD OF CUTTING LIVE CONDUIT IN VENTING OPERATIONS, DC WIRING SHALL BE RUN IN METALLIC CONDUIT OR RACEWAYS WHEN LOCATED WITHIN ENCLOSED SPECS IN A BUILDING AND SHOULD BE RUN, TO THE MAXIMUM EXTENT POSSIBLE, ALONG THE BOTTOM OF LOAD BEARING MEMBERS.

PV SYSTEM GENERAL NOTES

1. THESES DRAWINGS AND SPECIFICATIONS ARE INTENDED TO COVER A COMPLETE INSTALLATION OF THE PV SYSTEM. THE OMISSION OR EXPRESSED REFERENCE TO ANY ITEM OF LABOR OR MATERIALS REQUIRED FOR THE PROPER EXECUTION OF THE WORK IN ACCORDANCE WITH PRESENT PRACTICE OF THE TRADE SHALL NOT RELIEVE THE CONTRACTOR FROM PROVIDING SUCH ADDITIONAL LABOR AND MATERIALS.
2. THE PV CONTRACTOR SHALL PROVIDE AND INSTALL ALL EQUIPMENT SHOWN THESE DRAWINGS UNLESS NOTED ON THESE PLANS AND SPECIFICATIONS THAT SUCH WORK IS TO BE PROVIDED BY OTHERS.
3. THE PV CONTRACTOR SHALL BE A LICENSED (C-46) SOLAR CONTRACTOR OR A LICENSED (C-10) ELECTRICAL CONTRACTOR.
4. THESE PLANS AND SPECIFICATIONS AND ALL WORK AND MATERIALS SHALL BE IN FULL ACCORDANCE WITH ALL LEGAL AND INDUSTRY REQUIREMENTS AND STANDARDS INCLUDING WITHOUT LIMITATION THE FOLLOWING:
   a. CALIFORNIA CODE OF REGULATIONS TITLE 24, PARTS 1 AND 2 (CALIFORNIA BUILDING CODE), 2019 EDITION.
   b. CALIFORNIA CODE OF REGULATIONS TITLE 24, PART 3 (CALIFORNIA ELECTRICAL CODE), 2019 EDITION.
   c. CALIFORNIA CODE OF REGULATIONS TITLE 24, PART 6 (CALIFORNIA ENERGY CODE), 2019 EDITION.
   d. CALIFORNIA CODE OF REGULATIONS TITLE 24, PART 9 (CALIFORNIA FIRE CODE), 2019 EDITION.
   e. OTHER REGULATING AGENCIES WHICH MAY HAVE AUTHORITY OVER ANY PORTION OF THE WORK, INCLUDING THE STATE OF CALIFORNIA DIVISION OF INDUSTRIAL SAFETY, AND THOSE CODES AND STANDARDS LISTED IN THESE NOTES AND SPECIFICATIONS.
   f. THE ELECTRICAL SYSTEMS FUNCTIONALITY STANDARDS SET FORTH IN TITLE 7 OF THE CALIFORNIA CIVIL CODE (THE "RIGHT TO REPAIR ACT").
   g. THE MANUFACTURER'S REQUIREMENTS OR RECOMMENDATIONS FOR ANY INCORPORATED PRODUCTS.
   h. THE MOST CURRENT APPROVED ISSUES OF ANY NOTED SPECIFICATIONS, CODES AND STANDARDS, INCLUDING SUPPLEMENTS, UNLESS NOTED OTHERWISE.
   i. FOR PROJECTS WITHIN THE CITY OF LOS ANGELES ALL ELECTRICAL EQUIPMENT SHALL BE LISTED BY A CITY OF LOS ANGELES RECOGNIZED ELECTRICAL TESTING LABORATORY.
9. CEC ART. 690.9 (A). ALL CIRCUITS CONNECTED TO MORE THAN ONE SOURCE SHALL HAVE OVERCURRENT DEVICES LOCATED SO AS TO PROVIDE OVERCURRENT PROTECTION FROM ALL SOURCES.
10. CEC ART. 690.14. EACH DC DISCONNECT SHALL BE LABELED "SOLAR PHOTOVOLTAIC POWER SYSTEM EMERGENCY DC CONNECT". LABEL SHALL BE 2" X 4" MINIMUM WITH UV RESISTANT RED LETTERS ON WHITE BACKGROUND.
11. CEC ART. 690.14. EACH AC DISCONNECT SHALL BE LABELED "SOLAR PHOTOVOLTAIC POWER SYSTEM AC DISCONNECT". LABEL SHALL BE 2" X 4" MINIMUM WITH UV RESISTANT RED LETTERS ON WHITE BACKGROUND.
12. CEC ART. 690.17. EACH AC DISCONNECT SHALL ALSO BE LABELED WITH: "WARNING! - ELECTRIC SHOCK HAZARD - DO NOT TOUCH TERMINALS. TERMINALS ON BOTH LINE AND LOAD SIDES MAY BE ENERGIZED IN OPEN POSITION". LABEL SHALL BE 2" X 4" MINIMUM WITH UV RESISTANT RED LETTERS ON WHITE BACKGROUND.
13. CEC ART. 690.18. DUE TO THE FACT THAT PV MODULES ARE ENERGIZED WHENEVER THEY ARE EXPOSED TO LIGHT, PV CONTRACTOR SHALL DISABLE THE ARRAY DURING INSTALLATION AND SERVICE BY SHORT CIRCUITING, OPEN CIRCUITING OR COVERING THE ARRAY WITH AN OPAQUE COVERING.
14. CEC ART. 690.35(F). THE PHOTOVOLTAIC POWER SOURCE SHALL BE LABELED WITH THE FOLLOWING WARNING AT EACH JUNCTION BOX, COMBINER BOX, DISCONNECT, AND DEVICE WHERE THE UNGROUNDED CIRCUITS MAY BE EXPOSED DURING SERVICE: "WARNING: ELECTRIC SHOCK HAZARD. THE DC CONDUCTORS OF THIS PHOTOVOLTAIC SYSTEM ARE UNGROUNDED AND MAY BE ENERGIZED".
15. CEC ART. 690.49 REMOVAL OF UTILITY-INTERACTIVE INVERTER OR OTHER EQUIPMENT SHALL NOT DISCONNECT THE BONDING CONNECTION GROUNDING ELECTRODE CONDUCTOR AND THE PHOTOVOLTAIC SOURCE AND/OR OUTPUT CIRCUIT GROUNDING CONDUCTOR.
16. CEC ART. 690.56(B). BUILDING OR STRUCTURES WITH BOTH UTILITY SERVICE AND A PHOTOVOLTAIC SYSTEM SHALL HAVE A PERMANENT PLAQUE OR DIRECTORY PROVIDING THE LOCATION OF THIS SERVICE DISCONNECTING MEANS AND THE PHOTOVOLTAIC SYSTEM DISCONNECTING MEANS, IF NOT LOCATED AT THE SAME LOCATION.
17. PHOTOVOLTAIC SYSTEM SHALL BACKFEED THE DISTRIBUTION SYSTEM ON SITE PER THE REQUIREMENTS OF CEC ART. 690.64 (B). ALL BACKFEED BREAKERS SHALL BE IDENTIFIED AS SUCH AND SHALL BE SECURED IN PLACE BY AN ADDITIONAL FASTENER PER THE REQUIREMENTS OF CEC 408.36.
18. CEC ART. 690.53. A PLACARD, MINIMUM 3" X 6", UV RESISTANT AND INCLUDING RED LETTERS, WHITE BACKGROUND SHALL BE PROVIDED BESIDE THE DC DISCONNECT WITH THE FOLLOWING "CAUTION SOLAR CIRCUIT DISCONNECT".
19. CIRCUIT BREAKERS THAT ARE MARKED "LINE" AND "LOAD" ARE NOT PERMITTED TO BE BACK-FED (690.10(E)).
20. PV CONTRACTOR SHALL PROVIDE A PERMANENT PLAQUE OR DIRECTORY DENOTING ALL ELECTRIC POWER SOURCES ON OR IN THE PREMISES SHALL BE INSTALLED AT EACH SERVICE EQUIPMENT LOCATION AND AT LOCATIONS OF ALL ELECTRIC POWER PRODUCTION SOURCES CAPABLE OF BEING INTERCONNECTED.
21. ALL PV SYSTEM CONDUITS SHALL BE PERMANENTLY LABELED WITH FADE RESISTANT MATERIAL AS FOLLOWS: "CAUTION: SOLAR PV WIRING MAY REMAIN ENERGIZED AFTER DISCONNECTION DURING DAYLIGHT HOURS". INSTALL LABELS EVERY 20' AND ONE AT EYE LEVEL FOR VERTICAL CONDUIT.
22. ALL CONDUCTORS AND TERMINATIONS SHALL BE RATED FOR 75°C MINIMUM. EXPOSED CONDUCTORS SHALL BE SUNLIGHT RESISTANT.
23. ALL NEW WIRING FROM COMBINER BOXES TO SE SHALL BE COPPER 600-VOLT INSULATION TYPE "THWN-2" - U.O.N.
24. ALL NEW WIRING FROM ARRAY TO COMBINER BOXES SHALL BE COPPER USE-2. EXPOSED CONDUCTORS SHALL BE SUNLIGHT RESISTANT.
25. MOUNTING HEIGHTS OF ALL CONDUCTORS IS A MINIMUM 2 INCHES OFF THE ROOF.
26. UNLESS OTHERWISE NOTED ALL EQUIPMENT IS EXTERIOR.
27. ALL ELECTRICAL WORK AND EQUIPMENT SHALL BE GUARANTEED IN WRITING FOR A PERIOD OF TEN (10) YEARS AFTER FINAL ACCEPTANCE OF WORK.
28. THE PLANS REPRESENT ONLY THE FINISHED PHOTOVOLTAIC (PV) SYSTEMS, AND THEY ARE NOT INTENDED TO INDICATE OR REQUIRE ANY CONSTRUCTION MEANS, METHODS, TECHNIQUES, SEQUENCES OR PROCEDURES.
29. IN USING THE PLANS FOR BIDDING OR CONSTRUCTION PURPOSES, THE CONTRACTOR IS REQUIRED TO REVIEW ALL OF THE PROJECTS CONSTRUCTION DOCUMENTS AS A WHOLE IN ORDER TO IDENTIFY ALL REQUIREMENTS THAT DIRECTLY OR INDIRECTLY AFFECT ITS PORTION OF THE PHOTOVOLTAIC WORK, EVEN REQUIREMENTS LOCATED IN SECTIONS DESIGNATED AS APPLICABLE TO OTHER TRADES. IN CASE OF CONFLICTS, THE CONTRACTOR SHALL EITHER OBTAIN DIRECTION FROM AN APPROPRIATE OWNER REPRESENTATIVE OR OTHERWISE APPLY THE MORE STRINGENT REQUIREMENT.
30. PRIOR TO BID, CONTRACTOR SHALL VISIT THE SITE TO VERIFY ALL EXISTING CONDITIONS TO BE ENCOUNTERED IN THE INSTALLATION OF THE ELECTRICAL WORK. INSTALLATION METHOD OF ALL ELECTRICAL WORK SHALL BE VERIFIED AND DETERMINED PRIOR TO BID DATE. CONTRACTOR SHALL NOTIFY THIS ENGINEER OF ANY REQUIRED MODIFICATIONS WHICH ARE NOT SHOWN ON THESE DRAWINGS. SUBMITTAL OF BID INDICATES CONTRACTOR IS AWARE OF ALL JOB SITE CONDITIONS AND THE WORK TO BE PERFORMED.
31. PV CONTRACTOR SHALL CHECK AND VERIFY ALL DIMENSIONS AND CONDITIONS AT JOB SITE AND REPORT ANY DISCREPANCIES BEFORE COMMENCING WORK.
32. IN INTERPRETING THE PLANS, THE FOLLOWING GENERAL RULES APPLY:
   a. WRITTEN DIMENSIONS SHALL TAKE PRECEDENCE OVER SCALED DRAWINGS.
   b. SCALED DIMENSIONS AND GRAPHICALLY SHOWN LOCATIONS ARE TO BE CONSIDERED ONLY APPROXIMATE, FIELD VERIFY DIMENSIONS PRIOR TO BID.
   c. BECAUSE THE PLANS ARE INTENDED TO SET FORTH THE REQUIREMENTS FOR CONSTRUCTION IN ONLY AN INDUSTRY-STANDARD LEVEL OF QUALITY AND DETAIL, AND THEREFORE ARE INTENDED TO BE SUPPLEMENTED BY APPROPRIATE REQUESTS FOR CLARIFICATION AND INFORMATION, ERRORS AND OMISSIONS AND TO BRING THESE ERRORS AND OMISSIONS TO THE ATTENTION OF AN APPROPRIATE OWNER REPRESENTATIVE IN A TIMELY MANNER AND ASSUMES THE RISK OF THE CONSEQUENCES OF FAILING TO DO SO BEFORE BIDDING OR OTHERWISE PROCEEDING.
   d. THE CONTRACTOR SHALL REVIEW AND VERIFY ALL DIMENSIONS PRIOR TO STARTING CONSTRUCTION, AND NOTIFY THE ELECTRICAL ENGINEER IMMEDIATELY OF ANY DISCREPANCIES OR INCONSISTENCIES.
33. SUBMITTALS WILL BE REVIEWED BY THE ELECTRICAL ENGINEER, IF AT ALL, ONLY PURSUANT TO THE INDUSTRY-STANDARD PROTOCOL SET FORTH IN AIA DOCUMENT A201, AND IN NO EVENT WILL THE THE SUBMITTAL REVIEW PROCESS RELIEVE OR LESSEN THE SUBMITTING CONTRACTOR'S RESPONSIBILITY FOR AN INAPPROPRIATE SUBMITTAL.
34. IN NO EVENT WILL ANY SITE VISITS BY THE ELECTRICAL ENGINEER CONCERN CONSTRUCTION MEANS AND METHODS OR CONSTRUCTION SAFETY, AND ALL SUCH MATTERS SHALL REMAIN THE SOLE RESPONSIBILITY OF THE CONTRACTOR.
35. COPIES OF THE THE PLANS PROVIDED IN ANY ELECTRONIC FORM ARE SUBJECT TO THE SAME PROVISIONS AS THE OTHER INSTRUMENTS OF SERVICE PREPARED BY OR ON BEHALF OF THE ELECTRICAL ENGINEER FOR THE PROJECT, INCLUDING WITHOUT LIMITATION THE ENGINEER'S COMMON LAW, STATUTORY OR OTHER RESERVED RIGHTS, INCLUDING COPYRIGHTS. A RECIPIENT IS GRANTED AT MOST A TRANSFERABLE NONEXCLUSIVE LICENSE TO REUSE THE PLANS SOLELY FOR PROJECT PURPOSES; AND NO RECIPIENT IS AUTHORIZED TO USE OR TO ALLOW THE USE OF ALL OR ANY PORTION OF THESE PLANS FOR ANY OTHER PURPOSE, AND ANY USE FOR ANY OTHER PURPOSE WOULD CONSTITUTE ACTIONABLE PLAGIARISM. ELECTRICAL ENGINEER PROVIDES DOCUMENTS IN AN ELECTRONIC FORM ONLY IN ITS STANDARD FORMATS AND CONVENTIONS AND WITH NO GUARANTEE OF COMPATIBILITY WITH ANY RECIPIENT'S SOFTWARE OR HARDWARE AND ANY USE WITH OR CONVERSION TO OTHER FORMATS OR CONVENTIONS, OR THE USE WITH ANY PARTICULAR SOFTWARE OR HARDWARE, IS AT THE RECIPIENT'S SOLE RISK.
36. THE DRAWINGS INDICATE, IN A DIAGRAMMATIC MANNER, THE DESIRED LOCATIONS AND ARRANGEMENT OF THE COMPONENTS OF PHOTOVOLTAIC WORK. DETERMINE EXACT PV EQUIPMENT, CONDUIT AND WIRING ROUTING, CONDUIT BENDS, AUXILIARY JUNCTION BOXES, SUPPORTS AND UNDEFINED CONSTRUCTION DETAILS AS A JOB CONDITION TO BE INSTALLED IN ACCORDANCE WITH THE APPLICABLE CODE REQUIREMENTS. PROPER JUDGEMENT MUST BE EXERCISED IN EXECUTING THE WORK SO AS TO SECURE THE BEST POSSIBLE INSTALLATION IN THE AVAILABLE SPACE AND TO OVERCOME LOCAL DIFFICULTIES DUE TO SPACE LIMITATIONS OR INTERFERENCE OF CONDITIONS ENCOUNTERED.
37. IN THE EVENT CHANGES IN THE INDICATED LOCATIONS OR ARRANGEMENTS ARE NECESSARY, DUE TO DEVELOPED CONDITIONS IN THE BUILDING CONSTRUCTION OR REARRANGEMENT OF EQUIPMENT, SUCH CHANGES SHALL BE MADE WITHOUT COST PROVIDING THE CHANGE IS ORDERED BEFORE THE CONDUIT RUNS, ETC;, AND WORK DIRECTLY CONNECTED TO SAME IS INSTALLED AND NO EXTRA MATERIALS ARE REQUIRED.
38. PROVIDE ALL EQUIPMENT WITH ENCLOSURES LISTED OR LABELED FOR USE AND LOCATION WHERE SUCH EQUIPMENT IS INSTALLED.
39. PROVIDE UL LISTED FIRE STOP FOR ALL PENETRATIONS THROUGH FIRE RATED WALLS, PARTITIONS, FLOORS, CEILINGS AND ROOF TO MAINTAIN ALL FIRE RATINGS PER CEC 300.21.
40. GROUNDING SHALL BE EXECUTED IN ACCORDANCE WITH ALL APPLICABLE CODES AND REGULATIONS, BOTH OF THE STATE OF CALIFORNIA AND LOCAL AUTHORITIES HAVING JURISDICTION.
41. CONDUIT FOR ROOF MOUNTED EQUIPMENT SHALL BE ROUTED BELOW ROOF AND WITHIN BUILDING.
42. ALL ELECTRICAL EQUIPMENT SHALL BE NEW AND BE U.L. LISTED AND LABELED.

SYMBOL LIST

(ALL SYMBOLS NOT NECESSARILY USED ON THESE DRAWINGS)
ALL SYMBOL DESCRIPTIONS ARE SUBJECT TO MODIFICATION AS NOTED ON THE DRAWINGS. VERIFY EXACT LOCATIONS AND HEIGHTS OF OUTLETS WITH ARCHITECTURAL INTERIOR ELEVATIONS PRIOR TO ROUGH-IN.

- S1M1 — SOLAR MODULE. MODULE IDENTIFIER S1M1. S1 = STRING 1, M1 = MODULE 1.
- FUSED SAFETY SWITCH (DISCONNECT), HORSE POWER RATED. MOUNT ON WALL +45", OR ON EQUIPMENT +36".PROVIDE SWITCH AND FUSES SIZED PER EQUIPMENT MANUFACTURER REQUIREMENTS.
- CONDUIT, INSTALLED CONCEALED IN OR UNDER FLOOR OR BELOW GRADE, 3/4" CONDUIT MINIMUM.
- CONDUIT, INSTALLED EXPOSED.
- B-5,7,9 — HOMERUN TO PANEL "B" FOR CIRCUITS 5, 7, 9 WITH SEPERATE NEUTRALS.
- UNDERGROUND CONDUIT STUBOUT, STUB 5'-0" FROM BUILDING OR WALKWAY, CAP, MARK AND RECORD.
- CONNECTED TO SOLID GROUND REFERENCE POINT
- A / E-1 — PANELBOARD, ADJACENT LINE INDICATES PANEL FRONT. ADJACENT BALLOON INDICATES PANEL DESIGNATION "A", SEE DRAWING E-1 FOR PANEL SCHEDULE.
- 1 — PLAN NOTE CALLOUT. REFER TO CORRESPONDING NOTE ON DRAWING WHERE CALLOUT OCCURS.

PV ABBREVIATIONS

A	AMPERE
AC	ALTERNATING CURRENT
AFCI	ARC FAULT CURRENT INTERRUPTER
AZIM	AZIMUTH
COMP	COMPOSITION
DC	DIRECT CURRENT
EXT	EXTERIOR
FRM	FRAMING
INT	INTERIOR
LBW	LOAD BEARING WALL
MAG	MAGNETIC
NTS	NOT TO SCALE
OC	ON CENTER
PSF	POUNDS PER SQUARE FOOR
PV	PHOTOVOLTAIC
TL	TRANSFORMERLESS
TYP	TYPICAL
V	VOLTS
W	WATTS

PERMITTING/PLANNING NOTES

1. THIS PV SYSTEM INSTRUCTION IS SUBJECT TO INSPECTION BY THE AUTHORITY HAVING JURISDICTION
2. THIS PROJECT SHALL CONFORM TO THE FOLLOWING CODE VERSIONS
   - 2.1. 2019 CALIFORNIA BUILDING CODE
   - 2.2. 2019 ELECTRIC CODE
   - 2.3. 2019 CALIFORNIA FIRE CODE
   - 2.4. 2019 CALIFORNIA ENERGY CODE
   - 2.5. 2019 CALIFORNIA GREEN BUILDING STANDARDS CODE
   - 2.6. 2019 CALIFORNIA PLUMBING CODE
   - 2.7. 2019 CALIFORNIA MECHANICAL CODE
   - 2.8. AUTHORITY HAVING JURISDICTION
3. ROOFTOP MOUNTED PV SYSTEM MEETS FIRE CLASSIFICATION PER CBC 1505.9 CLASS 'A'. PV SYSTEM AND ASSOCIATED RACKING SYSTEM ARE LISTED AND IDENTIFIED WITH FIRE CLASSIFICATION IN ACCORDANCE WITH UL 1703
4. SYSTEM UTILIZES SOLAREDGE INVERTERS AND OPTIMIZERS WHICH MEET 690.12 RAPID SHUTDOWN REQUIREMENTS.
5. 110.2 APPROVAL: ALL ELECTRICAL EQUIPMENT SHALL BE LABELED, LISTED OR CERTIFIED BY A NATIONALLY RECOGNIZED TESTING LABORATORY ACCREDITED BY THE UNITED STATES OCCUPATIONAL SAFETY HEALTH ADMINISTRATION

SCOPE OF WORK

GENERAL

PROVIDE UTILITY INTERACTIVE ROOF MOUNTED PHOTOVOLTAIC SYSTEM CONSISTING OF PV MODULES, MOUNTING RAILS AND HARDWARE, INVERTERS, UTILITY GRADE METER ASSEMBLY, DISCONNECT GROUNDING , AC SERVICE CONNECTION CONDUIT, WIRING (AC AND DC) FOR COMPLETE AND OPERABLE SYSTEM.

ONLY THE PHOTOVOLTAIC SYSTEM IS INCLUDED IN THIS SCOPE OF WORK. ALL OTHER ELECTRICAL WORK IS UNDER SEPARATE PERMITS AS INDICATED BELOW.

- ENERGY STORAGE SYSTEM CONFORMS TO AND IS LISTED UNDER UL 9540.
- RAPID SHUTDOWN REQUIREMENTS MET WHEN INVERTERS AND ALL CONDUCTORS ARE WITHIN ARRAY BOUNDARIES PER NEC690.71(B)(1)
- ADDITIONAL DISCONNECTING MEANS SHALL BE INSTALLED WHERE ENERGY STORAGE DEVICE INPUT AND OUTPUT TERMINALS ARE MORE THAN 5FT FROM CONNECTED EQUIPMENT, OR WHERE THE CIRCUITS FROM THESE TERMINALS PASS THROUGH A WALL OR PARTITION PER NEC 6690.71(H).
- LISTED, COMBINATION TYPE AFCI SHALL BE INSTALLED WHERE BACKED UP CIRCUIT WIRING IS EXTENDED MORE THAN 6FT AND DOES NOT INCLUDE ANY ADDITIONAL OUTLETS OR DEVICES PER NEC 201.12(B)

- **SYSTEM SIZE**: 19.36KW DC
- **MODULES**: (44) LG NeON 2 #LG440QAC
- **INVERTERS**: (1) 27.0KW DC IN / 20.0 KW AC OUTPUT SOLAR EDGE SE20KUS
- **COMBINER BOX**: SOLAREDGE ACSW-DCJB-V2
- **RACKING**: UNIRAC SOLARMOUNT
- **BATTERY**: NONE

PV SHEET INDEX

PV-0.01	PV GENERAL NOTES & DETAILS
PV-0.02	PV SINGLE LINE DIAGRAM
PV-0.03	PV LABELS AND PLACARDS
PV-0.04	PV DETAILS
PV-0.05	PV DETAILS
PV-1.01	PHOTOVOLTAIC ELECTRICAL PLANS
PV-2.01	PHOTOVOLTAIC ROOF ELECTRICAL PLAN

DIGALERT — DIAL TOLL FREE 1-800-422-4133 — AT LEAST TWO DAYS BEFORE YOU DIG
UNDERGROUND SERVICE ALERT OF SOUTHERN CALIFORNIA

BASIS OF BEARINGS:
BEARINGS SHOWN HEREON ARE BASED ON THE CENTERLINE OF 162 ND STREET (FORMERLY MARKET STREET) BEING N 89° 55' 30" E SHOWN ON TRACT NO. 10901, M.B. 254/31-32

BENCHMARK:
THE CITY OF GARDENA BENCHMARK NO. 5D-15 ELEV. = 43.508

CONSULTANT:

FBA Engineering
Consulting Electrical Engineers
150 Paularino Avenue Suite A120
Costa Mesa, CA 92626
949.852.9995 • 949.852.1657 (fax)
fbaengr.com
FBA Job Number: 535050

REGISTERED PROFESSIONAL ENGINEER — No. 10372 — Exp. 09-30-24 — ELECTRICAL — STATE OF CALIFORNIA
05/01/2023

PREPARED UNDER THE SUPERVISION OF:

RJM DESIGN GROUP
31591 Camino Capistrano
San Juan Capistrano, CA 92675
www.RJMdesigngroup.com
[949] 493-2650 fax
[949] 493-2600 phone

LICENSED LANDSCAPE ARCHITECT — Signature — 09.30.2023 Renewal Date — 5.10.2023 Date — STATE OF CALIFORNIA

REVISIONS			
NO.	DESCRIPTION	DATE	APPROVED
1	90% CD SUBMITTAL	12/15/2022	
2	100% CD SUBMITTAL	05/01/2023	
3	FINAL SUBMITTAL	10/02/2023	

CITY OF GARDENA
DEPARTMENT OF PUBLIC WORKS - ENGINEERING
PV NOTES & SYMBOLS LIST
COMMUNITY AQUATICS & SENIOR CENTER
PV-0.01

	INITAL	DATE
DESIGNED BY	SR	11/14/2022
DRAWN BY	SR	09/26/2023
CHECKED BY	BZ	09/28/2023

APPROVED BY:
DATE
DIRECTOR OF PUBLIC WORKS
SHT. 177 OF 195 DWG. NO. 5-2606

FBA Engineering / Plot Date: 9/26/2023 11:20 AM / Plotted by: Steve Roth / Drawing Location: I:\535\050\PV-0.01_535050.dwg
FILE PATH: I:\535\050\PV-0.01_535050.DWG
PLOT TIME: 11/6/2023 11:28:08 AM

PV SYSTEM SHORT CIRCUIT AND VOLTAGE DROP CALCULATIONS

FEEDERS

DESIGNATION	FEEDER LENGTH (ft)	PHASE ϕ	CONDUCTORS AI/Cu	CONDUCTORS SIZE	CONDUCTORS PARALLEL RUNS	CONDUIT MAG=1 NON=2	L-L VOLTAGE	L-N VOLTAGE	STARTING Isc	CONNECTED LOAD AMPACITY	BUS AVAILABLE Isc 3 ϕ	VOLTAGE DROP %
FEEDER "PV"	130	3	Cu	#10	1	1	480	277	65,000	22	2,026	1.14
PV INVERTER 1 - STRING 1	40	1	Cu	#6	1	1		400 DC		10		0.03
PV INVERTER 1 - STRING 2	50	1	Cu	#6	1	1		400 DC		10		0.11
PV INVERTER 1 - STRING 3	60	1	Cu	#6	1	1		400 DC		10		0.26
PV INVERTER 2 - STRING 4	70	1	Cu	#6	1	1		400 DC		10		0.26
PV INVERTER 2 - STRING 5	60	1	Cu	#6	1	1		400 DC		7		0.21

NOTE:

ALL WORK SHOWN LIGHT AND DASHED IS INSTALLED BY THE ELECTRICAL CONTRACTOR UNDER THE ELECTRICAL PERMIT.

ALL WORK SHOWN SOLID IS FOR THE PV SYSTEM.

PV SYSTEM SUMMARY

TOTAL # OF PANELS	44
WATTAGE OF PANELS	445
TOTAL DC RATING OF SYSTEM	19,580 W DC
TOTAL # OF INVERTERS	1
INVERTER EFFICIENCY	98.5%

SINGLE LINE DIAGRAM NOTES

1. ROOF MOUNTED PHOTOVOLTAIC MODULE, LG NeON 2 #LG440QAC, 440W, MONOCRYSTALLINE/N-TYPE, 66 CELLS.
2. SOLAR EDGE POWER OPTIMIZER (#P401) 1x1 DISTRIBUTION MOUNTED TO RACKING SYSTEM, BONDED TO MODULE AND RACKING SYSTEM WITH 1#6 AWG SOLID CU GROUND CONDUCTOR.
3. PHOTOVOLTAIC MODULE LEAD CONNECTION TO POWER OPTIMIZER (+/-)
4. "PV" AC DISCONNECT 30A, 3P WITH VIEWING WINDOW. PROVIDE REJECTION TYPE FUSE HOLDERS.
5. 3/4"C - 1#6 G TO UFER GROUND BUS IN MAIN ELECTRICAL ROOM.
6. CIRCUIT BREAKER SHALL BE RATED FOR BACK FEED APPLICATION.
7. ELECTRICAL DISTRIBUTION SYSTEM IS FULLY RATED FOR 65K AIC. SERIES RATING IS NOT ALLOWED.
8. TO PV PANEL MODULES 2-9. SEE STRING 1 ABOVE FOR EXAMPLE.

PV MODULE SCHEDULE							
MANUFACTURER	MODEL	DIMENSIONS	QUANTITY	WEIGHT	POWER (in Wp)	POWER OPTIMIZER	SUPPORTING MEANS
Phone Solar	PS445M4-24/TH	83" x 41" x 1.4"	44	55.12 LBS	440	SOLAREDGE	UNIRAC SOLARMOUNT

INVERTER SCHEDULE 1						
INVERTER #	MANUFACTURER	MODEL	# OF STRINGS	# PV MODULES	TILT	CEC EFFICIENCY
1	Solar Edge	SE20KUS	5	44	10	98.5
DC VOLTS RANGE	MAX INPUT VOLT	MAX SHORT CIRC.	MAX CURRENT IN	MAX DC INPUT PWR	NOM/MAX AC OUTPUT PWR	OPERATING RANGE
840-1000 VDC	1000 VDC	33 A	26.5 A	27 KW	20.0 KVA	244 - 305 VAC
MAX OUT CURRENT	MAX FAULT CURRENT	UL LISTING	FREQUENCY RANGE	THD	OPERATING TEMP RANGE	MAX ALLOWABLE O.C.P.
24 A	92 A	1741/1699B	59.3 - 60.5 Hz	<3% THD	- 40 to +140 F	30

BUS CALCULATION PER CEC 705

PV = 20,000W AC / 831 = 24A
24 AMPS X 1.25 (CEC 705) = 30A

30A (PV) + 400A (BUS RATING) = 430A

400A BUS X 1.20 (CEC 705) = 480A.

"MSB" 400A BUS IS ADEQUATE.

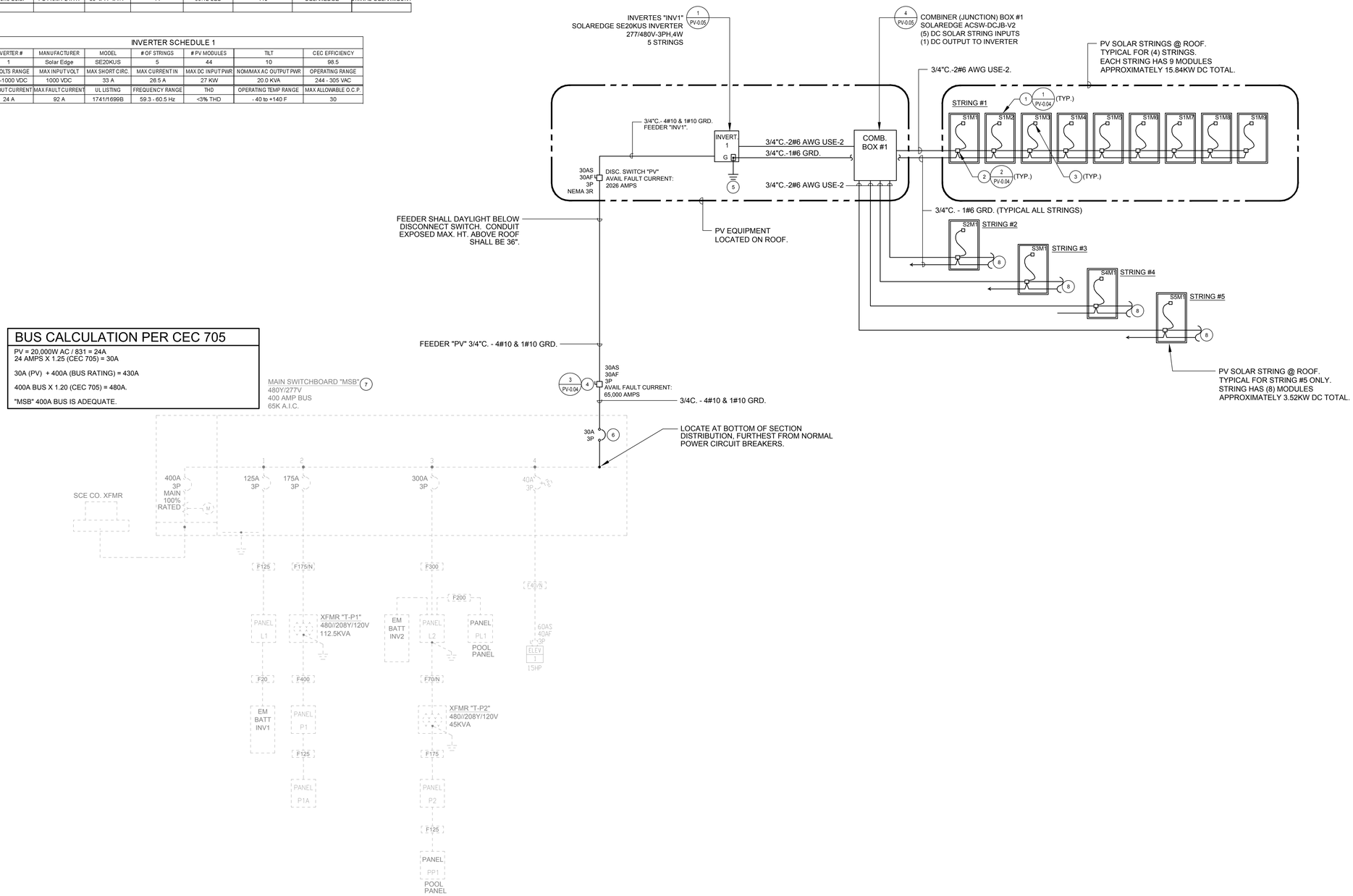

BASIS OF BEARINGS:

BEARINGS SHOWN HEREON ARE BASED ON THE CENTERLINE OF 162 ND STREET (FORMERLY MARKET STREET) BEING N 89° 55' 30" E SHOWN ON TRACT NO. 10901, M.B. 254/31-32

BENCHMARK:

THE CITY OF GARDENA BENCHMARK NO. 5D-15 ELEV. = 43.508

DIGALERT
DIAL TOLL FREE
1-800-422-4133
AT LEAST TWO DAYS BEFORE YOU DIG
UNDERGROUND SERVICE ALERT OF SOUTHERN CALIFORNIA

CONSULTANT:

FBA Engineering
Consulting Electrical Engineers
150 Paularino Avenue Suite A120
Costa Mesa, CA 92626
949.852.9995 • 949.852.1657 (fax)
fbaengr.com
FBA Job Number: 535050

REGISTERED PROFESSIONAL ENGINEER
No. 10372
Ex. 09-30-24
ELECTRICAL
STATE OF CALIFORNIA

05/01/2023

PREPARED UNDER THE SUPERVISION OF:

RJM DESIGN GROUP
31591 Camino Capistrano
San Juan Capistrano, CA 92675
www.RJMdesigngroup.com
[949] 493-2850 fax
[949] 493-2600 phone

LICENSED LANDSCAPE ARCHITECT
Signature
09/30/2023
Renewal Date
10/15/2023
Date
STATE OF CALIFORNIA

REVISIONS			
NO.	DESCRIPTION	DATE	APPROVED
1	90% CD SUBMITTAL	12/15/2022	
2	100% CD SUBMITTAL	05/01/2023	
3	FINAL SUBMITTAL	10/02/2023	

CITY OF GARDENA
DEPARTMENT OF PUBLIC WORKS - ENGINEERING

PV SINGLE LINE DIAGRAM

COMMUNITY AQUATICS & SENIOR CENTER
PV-0.02

	INITAL	DATE
DESIGNED BY	SR	11/14/2022
DRAWN BY	SR	09/26/2023
CHECKED BY	BZ	09/28/2023

APPROVED BY:

DATE DIRECTOR OF PUBLIC WORKS

SHT. 178 OF 195 DWG. NO. 5-2606

FBA Engineering / Plot Date: 10/12/2023 12:07 PM / Plotted by: Steve Roth / Drawing Location: I:\535\050\PV-0.02_535050.dwg

REF FILES: I:\535\050\P-V-0.02_535050.DWG
PLOT TIME: 10/12/2023 12:07:13 PM

WARNING

Arc Flash Hazard

Appropriate personal protection equipment (PPE) required to work on or near energized parts.

Failure to comply may result in shocks, burns, injury or death.

* NOTE: PROVIDE ARC-FLASH HAZARD WARNING PER CEC 110.16 AND APPLIED PER CEC 110.21(B)

PROVIDE 3.5"H. x 5"W. LABEL RED WITH WHITE LETTERS.

PHOTOVOLTAIC SYSTEM
DC DISCONNECT

-WARNING-
ELECTRIC SHOCK HAZARD

*TO BE MOUNTED ON EACH DC DISCONNECT

DC DISCONNECT LABEL

2"x4"
RED WITH WHITE LETTERS

INV#

*TO BE MOUNTED ON EACH INVERTER, NUMBERED AS INDICATED ON PLANS.

INVERTER LABEL

2"x4"
RED WITH WHITE LETTERS

PHOTOVOLTAIC
PANELBOARD

-WARNING-
ELECTRIC SHOCK HAZARD
DO NOT ADD ADDITIONAL LOADS

*TO BE MOUNTED ON "PV"

PANELBOARD LABEL

2"x4"
RED WITH WHITE LETTERS

SOLAR PV SYSTEM EQUIPPED WITH RAPID SHUTDOWN

TURN RAPID SHUTDOWN SWITCH TO THE "OFF" POSITION TO SHUT DOWN CONDUCTORS OUTSIDE THE ARRAY. CONDUCTORS WITHIN THE ARRAY REMAIN ENERGIZED IN SUNLIGHT.

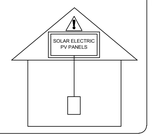

* NOTE: PROVIDE RAPID SHUT DOWN LABEL PER CEC 690.56(C) AND APPLIED PER CEC 110.21(B).

PROVIDE 3.5"H. x 5"W. LABEL RED WITH WHITE LETTERS.

-WARNING-
ELECTRIC SHOCK HAZARD.
DO NOT TOUCH TERMINALS. TERMINALS ON BOTH THE LINE AND LOAD SIDES MAY BE ENERGIZED IN THE OPEN POSITION.

*TO BE MOUNTED ON EACH DC DISCONNECT

DC DISCONNECT LABEL

2"x4"
RED WITH WHITE LETTERS

PHOTOVOLTAIC SYSTEM
INVERTER

-WARNING-
ELECTRIC SHOCK HAZARD

*TO BE MOUNTED ON EACH INVERTER

INVERTER

2"x4"
RED WITH WHITE LETTERS

MAIN
DISCONNECT

*TO BE MOUNTED ON "MS"

PV DISCONNECT LABEL

3"x6"
RED WITH WHITE LETTERS

ELECTRICAL POWER SOURCE DISCONNECT DIRECTORY

PROVIDE PERMANENT PLAQUE OR DIRECTORY DENOTING THE LOCATION OF ALL POWER SOURCE ELECTRICAL DISCONNECTING MEAN PER CEC 705.10 AND PER CEC 110.21(B).

* NOTE: PROVIDE ELECTRICAL POWER SOURCE DISCONNECT LOCATION LABEL PER CEC 705.10 AND APPLIED PER CEC 110.21(B).

PROVIDE 3.5"H. x 5"W. LABEL RED WITH WHITE LETTERS.

CAUTION
SOLAR ELECTRIC
SYSTEM CONNECTED

* PLACED ADJACENT TO THE MAIN SERVICE DISCONNECT IN A LOCATION CLEARLY VISIBLE FROM THE LOCATION WHERE THE LEVER IS OPERATED PER CODE

MAIN SERVICE DISCONNECT LABEL

3"x6"
RED WITH WHITE LETTERS

-WARNING-
ELECTRIC SHOCK HAZARD.
IF A GROUND FAULT IS INDICATED, NORMALLY GROUNDED CONDUCTORS MAY BE UNDERGROUND AND ENERGIZED

*TO BE MOUNTED ON EACH INVERTER

INVERTER GROUND-FAULT PROTECTION LABEL

2"x4"
RED WITH WHITE LETTERS

PHOTOVOLTAIC SYSTEM
COMMUNICATION
EQUIPMENT

*TO BE MOUNTED ON EACH COMMUNICATIONS EQUIPMENT BOX

COMMUNICATIONS BOX LABEL

2"x4"
RED WITH WHITE LETTERS

WARNING: PHOTOVOLTAIC
POWER SOURCE

*MARKING IS REQUIRED ON ALL INTERIOR AND EXTERIOR DC CONDUIT, RACEWAYS, ENCLOSURES, CABLE ASSEMBLIES, AND JUNCTION BOXES, EVERY 10' AT TURNS, AT TURNS, AND ABOVE AND/OR BELOW PENETRATIONS AND ALL DC COMBINER BOXES, PER CODE

SOLAR DC CIRCUIT LABEL
6.875"x0.625"
RED WITH WHITE LETTERS

-WARNING-
ELECTRIC SHOCK HAZARD.
THE DC CONDUCTORS OF THIS PHOTOVOLTAIC SYSTEM ARE UNDERGROUND AND MAY BE ENERGIZED.

*TO BE MOUNTED ON EACH ENCLOSURE BETWEEN THE AC DISCONNECT AND THE MAIN SERVICE DISCONNECT IF SUPPLY SIDE TAP

SUPPLY SIDE TAP DISCONNECT LABEL

2"x4"
RED WITH WHITE LETTERS

-WARNING-
ELECTRIC SHOCK HAZARD.
THE DC CONDUCTORS OF THIS PHOTOVOLTAIC SYSTEM ARE UNDERGROUND AND MAY BE ENERGIZED.

*TO BE MOUNTED ON EACH JUNCTION BOX, COMBINER BOX, DISCONNECT AND DEVICE WHERE ENERGIZED, UNDERGROUND CIRCUITS MAY BE EXPOSED DURING SERVICE

UNDERGROUND PV POWER LABEL

2"x4"
RED WITH WHITE LETTERS

SOLAR DISCONNCT

*MARKING REQUIRED ON SOLAR AC DISCONNECT SWITCH IN MAIN ELECTRICAL ROOM.

SOLAR DISCONNECT LABEL
6.875"x0.625"
RED WITH WHITE LETTERS

DIGALERT
DIAL TOLL FREE
1-800-422-4133
AT LEAST TWO DAYS BEFORE YOU DIG
UNDERGROUND SERVICE ALERT OF SOUTHERN CALIFORNIA

BASIS OF BEARINGS:

BEARINGS SHOWN HEREON ARE BASED ON THE CENTERLINE OF 162 ND STREET (FORMERLY MARKET STREET) BEING N 89° 55' 30" E SHOWN ON TRACT NO. 10901, M.B. 254/31-32

BENCHMARK:

THE CITY OF GARDENA BENCHMARK NO. 5D-15 ELEV. = 43.508

CONSULTANT:

FBA Engineering
Consulting Electrical Engineers
150 Paularino Avenue Suite A120
Costa Mesa, CA 92626
949.852.9995 • 949.852.1657 (fax)
fbaengr.com
FBA Job Number: 535050

REGISTERED PROFESSIONAL ENGINEER No. 10372 EXP. 09-30-24 ELECTRICAL STATE OF CALIFORNIA

05/01/2023

PREPARED UNDER THE SUPERVISION OF:

RJM DESIGN GROUP
31591 Camino Capistrano
San Juan Capistrano, CA 92675
www.RJMdesigngroup.com
[949] 493-2690 fax
[949] 493-2600 phone

REGISTERED LANDSCAPE ARCHITECT — STATE OF CALIFORNIA — 05/01/2023

REVISIONS			
NO.	DESCRIPTION	DATE	APPROVED
1	90% CD SUBMITTAL	12/15/2022	
2	100% CD SUBMITTAL	05/01/2023	
3	FINAL SUBMITTAL	10/02/2023	

CITY OF GARDENA
DEPARTMENT OF PUBLIC WORKS - ENGINEERING

PV LABELS & PLACARDS

COMMUNITY AQUATICS & SENIOR CENTER
PV-0.03

	INITAL	DATE	APPROVED BY:
DESIGNED BY	SR	11/14/2022	
DRAWN BY	SR	09/26/2023	DATE DIRECTOR OF PUBLIC WORKS
CHECKED BY	BZ	09/28/2023	

SHT. 179 OF 195 DWG. NO. 5-2606

FBA Engineering / Plot Date: 9/26/2023 11:20 AM / Plotted by: Steve Roth / Drawing Location: I:\535\050\PV-0.03_535050.dwg

PLT FILE: I:\535\050\PV-0.03_535050.DWG
PLOT TIME: 11/3/2023 11:28:54 AM

Rooftop DC Junction Box for SolarEdge Systems

SPECIFICATION SHEET

For commercial & residential SolarEdge systems
SKU: ACSW-DCJB-V2
ID: 1416



Commercial & residential solar systems made easy

The Rooftop DC Junction box for SolarEdge systems is a pre-assembled weather-proof enclosure used to combine DC circuits on the roof. The Rooftop DC junction box allows a single DC circuit to be run to the inverter from the roof, reducing DC cabling and the need for additional DC isolators at the inverter.

- Slim design to allow clearance above the roof
- Ability to rotate enclosure on the bracket to position cable entry points where required
- Inbuilt pressure equalisation valve
- Combine up to 5 strings without any additional glands
- Reduces DC cabling, additional DC isolators adjacent to the inverter and multiple HD conduits through roof spaces
- Suitable for all SolarEdge inverters
- IP 66 rated, suitable for mounting outdoors in various weather conditions
- Includes stainless steel universal bracket, conduits glands and labels and pre-assembled for ease of installation

To be installed in compliance with AS/NZS5033

acsolarwarehouse.com ACSolar Warehouse

Typical system installation

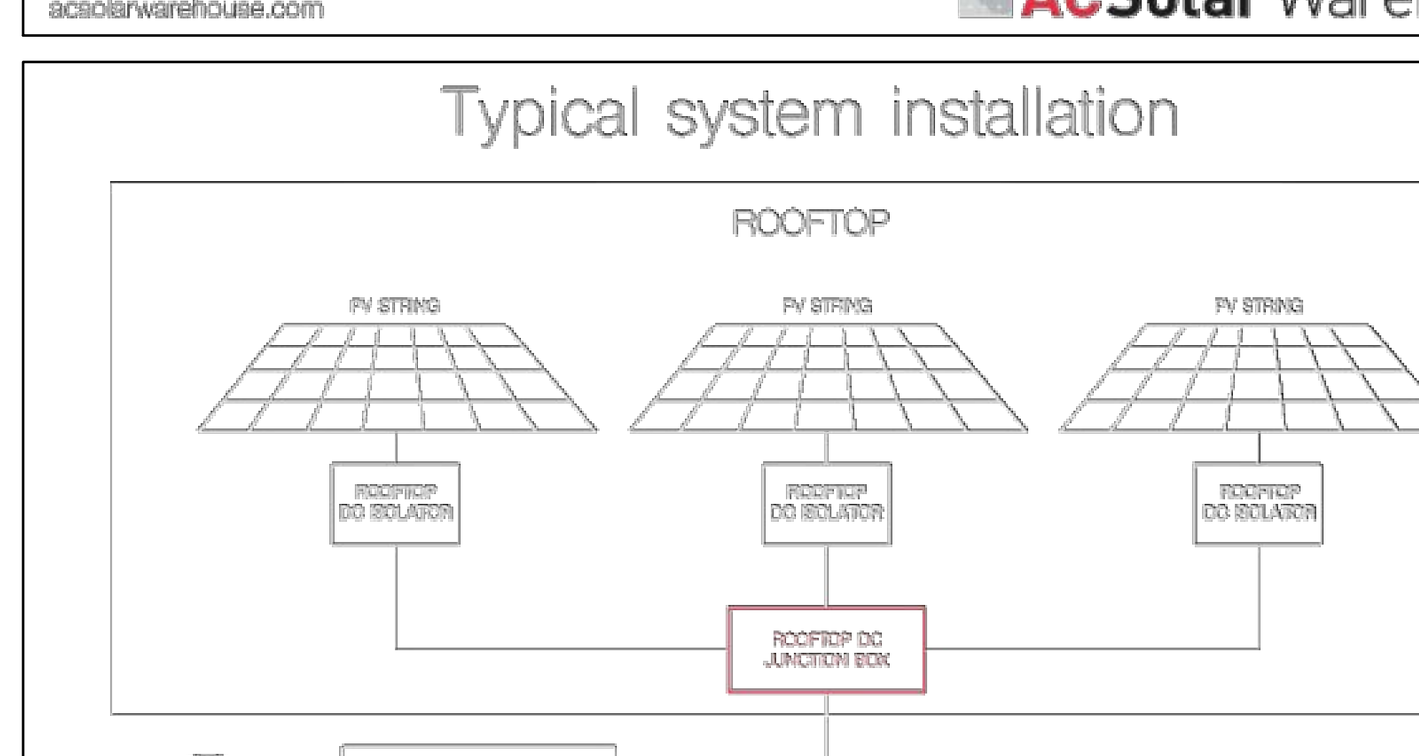

Mechanical specifications

Enclosure dimensions	185 x 185 x 58mm
Conduit gland	1 x 25mm
5 Hole gland - *Suitable for 4-6mm² DC cable	2 x 25mm with 6 blanking plugs
IP rating	IP 66
Weight	1kg

Electrical specifications

Dual entry negative terminals	3 x 10mm² (MAX)
Dual entry positive terminals	3 x 10mm² (MAX)
Terminal max current	57A (10mm² cable rated at 54A)
Terminal max voltage with suitable separation	1000V
Max cable size	10mm² with boot lace or 16mm² bare

This product comes with glands suitable for 5x string inputs and 1x output. There are enough gland entries and terminals to accomodate 5x inputs and 1x output.

*Some uncommon insulation thicknesses may not be suitable - if larger hole glands are required, contact AC Solar Warehouse to purchase.

acsolarwarehouse.com ACSolar Warehouse

COMBINER BOX | SCALE: NO SCALE | 4

SIEMENS



Product Guide

Type VBII Heavy Duty Switches with Viewing Window



- More visibility, less exposure
- Available in NEMA Type 3R, 12 and 4X stainless steel enclosures
- 30-400 Amp (amperages vary depending on enclosure) switches allow viewing of both visible blade position and of indication type fuses
- Rugged installer-friendly enclosure design features a gasket flange with continuously welded seams
- Tool-free cover latches
- Two, three and four point mounting
- Metal handle with large insulating grip features a positive stop in both ON and OFF position
- Ground lugs provided as standard
- Type 12 enclosures are fabricated from galvanized steel and are also rated for 3R/3S outdoor applications
- Type 4X stainless steel switches (30-400 Amp) are provided with stainless steel interior parts
- The widest range of accessories available including 200% neutrals, gold plated PLC auxiliary contacts and isolated ground kits
- Viewing window kit available as a replacement

usa.siemens.com/switches

Heavy duty safety switches with viewing window

Ordering information[1]

System	Ampere rating	Catalog number	Ship wt. (lbs.)	Max. HP ratings[2] 240V AC 1-phase, 2-wire	240V AC 3-phase, 3-wire	480V AC 3-phase, 3-wire	600V AC 3-phase, 3-wire	250V DC	600V DC
NEW 3-pole, 3-wire fusible, Type 3R[4] — 600 Volt AC / 250 Volt DC[1]									
	30	HF361RW	17	3	7½	15	20	5	—
	60	HF362RW	22	10	15	30	50	10	30[5]
NEW 3-pole, 3-wire non-fusible, Type 3R[4] — 600 Volt AC / 250 Volt DC[1]									
	30	HNF361RW	14	3	10	20	30	5	—
	60	HNF362RW	21	10	20	50	60	10	30[5]
3-pole, 3-wire fusible, Type 12[3][4] — 600 Volt AC / 250 Volt DC[1]									
	30	HF361JW	17	3	7½	15	20	5	—
	60	HF362JW	22	10	15	30	50	10	30[5]
	100	HF363JW	26	15	30	60	75	20	50[5]
	200	HF364JW	53	—	60	125	150	40	50
	400	HF365JW	166	—	125	250	350	50	—
	600	HF366JW	168	—	200	400	500	50	—
3-pole, 3-wire non-fusible, Type 12[3][4] — 600 Volt AC / 250 Volt DC[1]									
	30	HNF361JW	14	3	10	20	30	5	—
	60	HNF362JW	21	10	20	50	60	10	30[5]
	100	HNF363JW	25	15	40	75	100	20	50[5]
	200	HNF364JW	51	15	60	125	150	40	50
	400	HNF365JW	133	15	125	250	350	50	—
3-pole, 3-wire fusible, Type 4X Stainless Steel[4][6] — 600 Volt AC / 250 Volt DC[1]									
	30	HF361SW	17	3	7½	15	20	5	—
	60	HF362SW	23	10	15	30	50	10	30[5]
	100	HF363SW	28	15	30	60	75	20	50[5]
	200	HF364SW	55	—	60	125	150	40	50
	400	HF365SW	168	15	125	250	350	50	—
3-pole, 3-wire non-fusible, Type 4X Stainless Steel[4][6] — 600 Volt AC / 250 Volt DC[1]									
	30	HNF361SW	15	3	10	20	30	5	—
	60	HNF362SW	23	10	20	50	60	10	30[5]
	100	HNF363SW	27	15	40	75	100	20	50[5]
	200	HNF364SW	54	15	60	125	150	40	50
	400	HNF365SW	143	15	125	350	350	50	—

1) 200A switches are also rated 600V DC.
2) Maximum HP ratings listed apply only when time delay fuses are used.
3) Also rated 3S/3R for outdoor use.
4) All switches are suitable for use as service entrance equipment. Use outside poles of 3-pole switch for 2-pole application.
5) 600V DC and 600V DC horsepower rating shown requires (2) poles to be connected in series.
6) 304 grade stainless steel. For switches with enclosures constructed from 316 grade stainless steel, see page 4-16.

Lugs

30-100A switches are suitable for use with 60° or 75°C wire.
200-600 are suitable for use with 75°C wire.

Wire ranges (Line, load and standard neutral)

Switch ampere rating	Wire range with wire bending space per NEC Table 373-6	Lug wire range
30	#12-6 AWG (Al) or #14-6 AWG (Cu/Al)	#14-2 AWG (Cu/Al)
60	#12-2 AWG (Al) or #14-2 AWG (Cu/Al)	#14-2 AWG (Cu/Al)
100	#14-1/0 AWG (Cu/Al)	#14-1/0 AWG (Cu/Al)
200	#6 AWG-300 Kcmil (Cu/Al)	#6 AWG-300 Kcmil (Cu/Al)
400	1/0 AWG-750 Kcmil (Cu/Al) or (2) 1/0 AWG-250 Kcmil (Cu/Al)	(1) 1/0 AWG-750 Kcmil (Cu/Al) or (2) 1/0 AWG-250 Kcmil (Cu/Al)

DISCONNECT SWITCH | SCALE: NO SCALE | 3

Power Optimizer
For North America
P370 / P400 / P401 / P485 / P505

Optimizer model (typical module compatibility)	P370 (for higher-power 60 and 72-cell modules)	P400 (for 72 & 96-cell modules)	P401 (for high power 60 and 72 cell modules)	P485 (for high-voltage modules)	P505 (for higher current modules)	
INPUT						
Rated Input DC Power[1]	370	400	430	485	505	W
Absolute Maximum Input Voltage (Voc at lowest temperature)	60	80	60	125[2]	83[2]	Vdc
MPPT Operating Range	8 - 60	8 - 80	8-60	12.5 - 105	12.5 - 83	Vdc
Maximum Short Circuit Current (Isc)	11	10.1	12.5	11	14	Adc
Maximum DC Input Current	13.75	12.5	14.65	12.5	17.5	
Maximum Efficiency	99.5					%
Weighted Efficiency	98.8					%
Overvoltage Category	II					
OUTPUT DURING OPERATION (POWER OPTIMIZER CONNECTED TO OPERATING SOLAREDGE INVERTER)						
Maximum Output Current	15					Adc
Maximum Output Voltage	60			80		Vdc
OUTPUT DURING STANDBY (POWER OPTIMIZER DISCONNECTED FROM SOLAREDGE INVERTER OR SOLAREDGE INVERTER OFF)						
Safety Output Voltage per Power Optimizer	1 ± 0.1					Vdc
STANDARD COMPLIANCE						
EMC	FCC Part 15 Class B, IEC61000-6-2, IEC61000-6-3					
Safety	IEC62109-1 (class II safety), UL1741, NEC/PVRSS					
Material	UL94 V-0 , UV Resistant					
RoHS	Yes					
INSTALLATION SPECIFICATIONS						
Maximum Allowed System Voltage	1000					Vdc
Compatible inverters	All SolarEdge Single Phase and Three Phase inverters					
Dimensions (W x L x H)	129 x 153 x 27.5 / 5.1 x 6 x 1.1	129 x 153 x 33.5 / 5.1 x 6 x 1.3	129 x 153 x 29.5 / 5.1 x 6 x 1.16	129 x 159 x 49.5 / 5.1 x 6.3 x 1.9	129 x 162 x 59 / 5.1 x 6.4 x 2.3	mm / in
Weight (including cables)	630 / 1.4	750 / 1.7	655 / 1.5	845 / 1.9	1064 / 2.3	gr / lb
Input Connector	MC4[3]			MC4[3]	MC4[3]	
Input Wire Length	0.16 / 0.5					m / ft
Output Wire Type / Connector	Double Insulated / MC4					
Output Wire Length	1.2 / 3.9					m / ft
Operating Temperature Range[4]	-40 to +85 / -40 to +185					°C / °F
Protection Rating	IP68 / Type68					
Relative Humidity	0 - 100					%

(1) Rated power of the module at STC will not exceed the optimizer "Rated Input DC Power". Modules with up to +5% power tolerance are allowed
(2) NEC 2017 requires max input voltage be not more than 80V
(3) For other connector types please contact SolarEdge
(4) Longer inputs wire lengths are available for use. For 0.9m input wire length order P401-xxxLxxx
(5) For ambient temperature above +85°C / +185°F power de-rating is applied. Refer to Power Optimizers Temperature De-Rating Technical Note for more details: https://www.solaredge.com/sites/default/files/se-temperature-derating-note-na.pdf

PV System Design Using a SolarEdge Inverter[6][7]		Single Phase HD-Wave	Single phase	Three Phase for 208V grid	Three Phase for 277/480V grid	
Minimum String Length (Power Optimizers)	P370, P400, P401	8		10	18	
	P485, P505	6		8	14	
Maximum String Length (Power Optimizers)		25		25	50	
Maximum Power per String		5700[8] (6000 with SE7600-US - SE11400-US)	5250[8]	6000[9]	12750[10]	W
Parallel Strings of Different Lengths or Orientations		Yes				

(6) For detailed string sizing information refer to: http://www.solaredge.com/sites/default/files/string_sizing_na.pdf
(7) It is not allowed to mix P485/P505 with P370/P400/P401 in one string
(8) A string with more than 30 optimizers does not meet NEC rapid shutdown requirements; safety voltage will be above the 30V requirement
(9) For 208V grid: it is allowed to install up to 6,500W per string when the maximum power difference between each string is 1,000W
(10) For 277/480V grid: it is allowed to install up to 15,000W per string when the maximum power difference between each string is 2,000W

© SolarEdge Technologies Ltd. All rights reserved. SOLAREDGE, the SolarEdge logo, OPTIMIZED BY SOLAREDGE are trademarks or registered trademarks of SolarEdge Technologies, Inc. All other trademarks mentioned herein are trademarks of their respective owners. Date: February 10, 2022 DS-000044-NA. Subject to change without notice.

Intertek RoHS

Power Optimizer
For North America
P370 / P400 / P401 / P485 / P505

POWER OPTIMIZER



PV power optimization at the module-level

- Specifically designed to work with SolarEdge inverters
- Up to 25% more energy
- Superior efficiency (99.5%)
- Mitigates all types of module mismatch losses, from manufacturing tolerance to partial shading
- Flexible system design for maximum space utilization
- Fast installation with a single bolt
- Next generation maintenance with module-level monitoring
- Meets NEC requirements for arc fault protection (AFCI) and Photovoltaic Rapid Shutdown System (PVRSS)
- Module-level voltage shutdown for installer and firefighter safety

solaredge.com solaredge

POWER OPTIMIZER | SCALE: NO SCALE | 2

Phono Solar

TWINPLUS MODULE SERIES

HIGH EFFICIENCY MONO-PERC M4-9B-R

445-465W

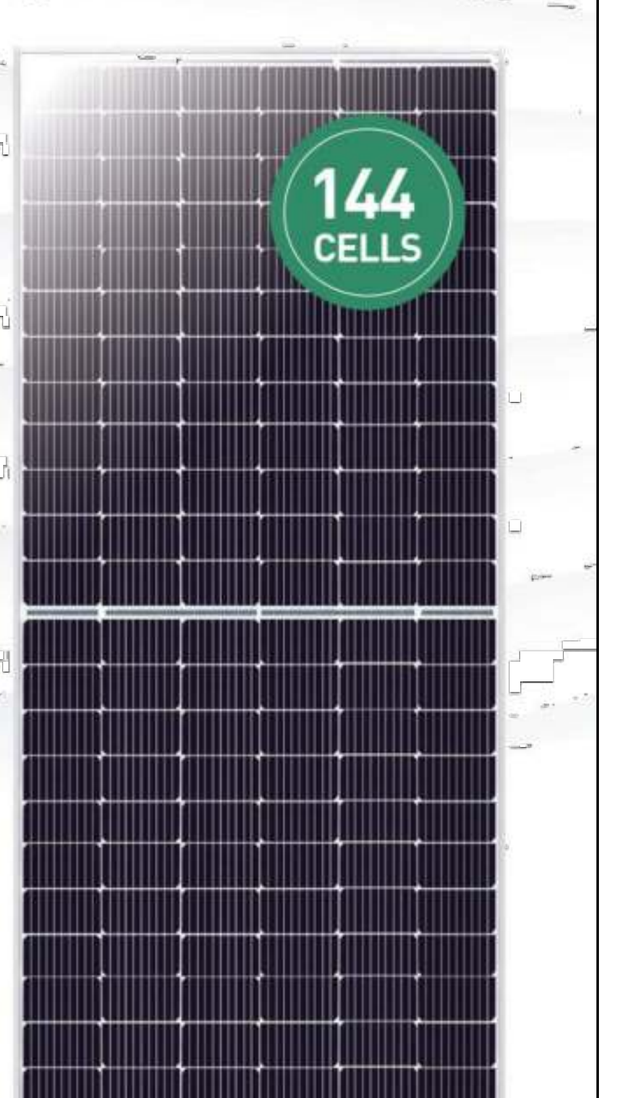

OUTSTANDING PRODUCT PERFORMANCE

- Competitive high-temperature performance with ameliorated temperature coefficient
- Minimized power loss in cell connection
- Better performance under shading effect
- Decreased nominal operating cell temperature to 45 ± 2°C
- Higher power generation with multi-busbar and half-cut technology

TRUSTWORTHY QUALITY AND RELIABILITY

- Guaranteed 0~+5W positive tolerance secures reliable power output
- 5400Pa maximum snow load, 2400Pa maximum wind load
- Optimized electrical design lowers hot spot risk and operating current

PID RESISTANT

- Industry-leading cell processing technology and electrical design ensure solid PID resistance

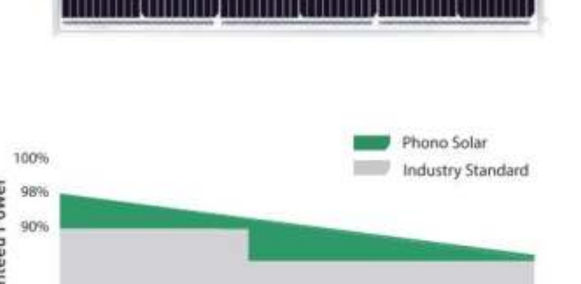

MANAGEMENT SYSTEM CERTIFICATES

IEC 61215, IEC 61730
ISO 9001:2015 / Quality management system
ISO 14001:2015 / Standards for environmental management system
ISO 45001:2018 / International standards for occupational health & safety

Bloomberg NEW ENERGY FINANCE Tier1

TOP PERFORMER 2022 PVEL PV MODULE RELIABILITY SCORECARD

GL-EN-Version 2022.09.20 © Phono Solar Co., Ltd All Rights Reserved

www.phonosolar.com info@phonosolar.com

ELECTRICAL TYPICAL VALUES

Model		PS445M4-24/TH		PS450M4-24/TH		PS455M4-24/TH		PS460M4-24/TH		PS465M4-24/TH	
	1500V	PS445M4H-24/TH		PS450M4H-24/TH		PS455M4H-24/TH		PS460M4H-24/TH		PS465M4H-24/TH	
Testing Condition		STC	NOCT	STC	NOCT	STC	NOCT	STC	NOCT	STC	NOCT
Rated Power (Pmpp)		445	331	450	335	455	339	460	342	465	346
Rated Current (Impp)		10.80	8.73	10.87	8.78	10.94	8.84	11.01	8.90	11.08	8.95
Rated Voltage (Vmpp)		41.21	37.94	41.40	38.12	41.60	38.30	41.79	38.47	41.97	38.64
Short Circuit Current (Isc)		11.29	9.12	11.38	9.20	11.47	9.27	11.58	9.36	11.69	9.45
Open Circuit Voltage (Voc)		49.11	46.36	49.24	46.48	49.37	46.61	49.52	46.75	49.65	46.87
Module Efficiency (%)		20.39		20.61		20.84		21.07		21.30	

(Model row 1: 1000V)

STC(Standard Testing Conditions):Irradiance 1000W/m², AM 1.5, Cell Temperature 25°C
NOCT (Nominal Operation Cell Temperature): Irradiance 800W/m², Ambient Temperature 20°C, Spectra at AM1.5, Wind at 1m/S

MECHANICAL CHARACTERISTICS

Cell Type	Monocrystalline 166mm x 83mm
Dimension (L× W × H)	Length: 2101mm (82.72 inch) Width: 1039mm (40.91 inch) Height: 35mm (1.38 inch)
Weight	25.0kg (55.12 lbs)
Front Glass	3.2mm Toughened Glass
Frame	Anodized Aluminium Alloy
Cable (Including Connector)	4mm² (IEC), (+):450mm,(-):250mm or Customized Length
Junction Box	IP 68 Rated

ELECTRICAL CHARACTERISTICS

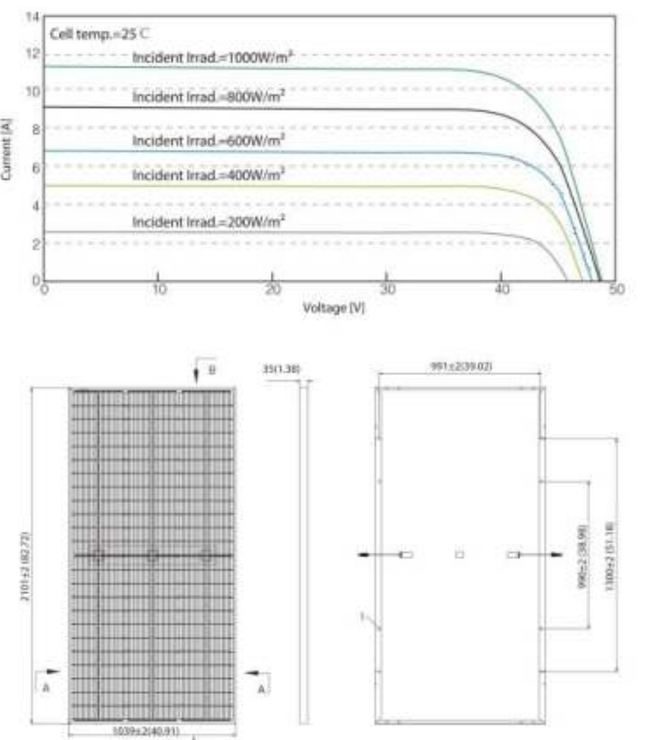

TEMPERATURE RATINGS

Voltage Temperature Coefficient	-0.28%/°C
Current Temperature Coefficient	+0.05%/°C
Power Temperature Coefficient	-0.35%/°C
Tolerance	0~+5w
NOCT	45±2°C

ABSOLUTE MAXIMUM RATING

Operating Temperature	From -40 to +85°C
Hail Diameter @ 80km/h	Up to 25mm
Front Side Maximum Static Loading	5400Pa
Rear Side Maximum Static Loading	2400Pa
Maximum Series Fuse Rating	20A
PV Module Classification	II
Fire Rating (IEC 61730)	C
Maximum System Voltage	DC 1500V/1000V

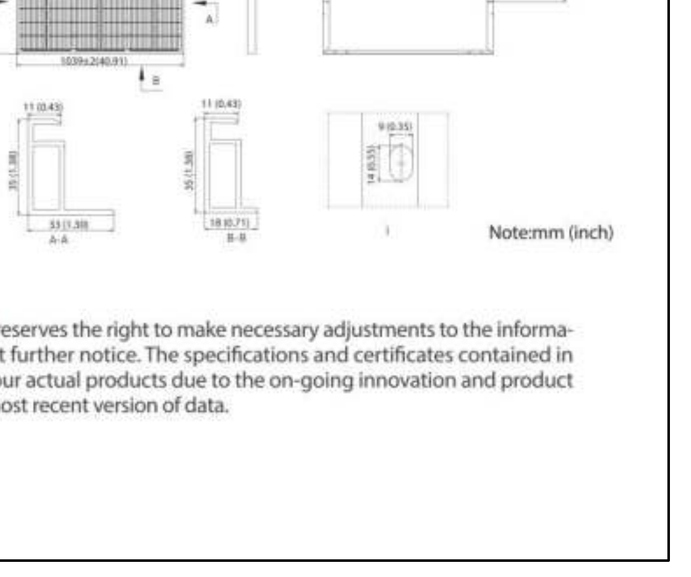

PACKING CONFIGURATION

Container	20' GP	40' HQ
Pieces/Container	255	682

Phono Solar

PHONO SOLAR TECHNOLOGY CO.,LTD reserves the right to make necessary adjustments to the information described herein at any time without further notice. The specifications and certificates contained in this datasheet may deviate slightly from our actual products due to the on-going innovation and product enhancement. Please be sure to use the most recent version of data.

LG NeON2 405 CUTSHEET | SCALE: NO SCALE | 1

FBA Engineering / Plot Date: 10/12/2023 12:01 PM / Plotted by: Steve Roth / Drawing Location: I:\535\050\PV-0.04_535005.dwg

DIGALERT
DIAL TOLL FREE 1-800-422-4133
AT LEAST TWO DAYS BEFORE YOU DIG
UNDERGROUND SERVICE ALERT OF SOUTHERN CALIFORNIA

BASIS OF BEARINGS:
BEARINGS SHOWN HEREON ARE BASED ON THE CENTERLINE OF 162 ND STREET (FORMERLY MARKET STREET) BEING N 89° 55' 30" E SHOWN ON TRACT NO. 10901, M.B. 254/31-32

BENCHMARK:
THE CITY OF GARDENA BENCHMARK NO. 5D-15 ELEV. = 43.508

CITY OF GARDENA FREEWAY CITY INCORPORATED 1930

CONSULTANT:
FBA Engineering
Consulting Electrical Engineers
150 Paularino Avenue Suite A120
Costa Mesa, CA 92626
949.852.9995 • 949.852.1657 (fax)
fbaengr.com
FBA Job Number: 535050

REGISTERED PROFESSIONAL ENGINEER STEVEN R. ... No. E 10372 Exp. 09-30-24 ELECTRICAL STATE OF CALIFORNIA
05/01/2023

PREPARED UNDER THE SUPERVISION OF:
RJM DESIGN GROUP
31591 Camino Capistrano
San Juan Capistrano, CA 92675
www.RJMdesigngroup.com
[949] 493-2690 *fax*
[949] 493-2600 *phone*

LICENSED LANDSCAPE ARCHITECT LARRY P. RYAN LICENSE NO. 2502 STATE OF CALIFORNIA
Signature
09/30/2023 Renewal Date
10/12/2023 Date

REVISIONS

NO.	DESCRIPTION	DATE	APPROVED
1	90% CD SUBMITTAL	12/15/2022	
2	100% CD SUBMITTAL	05/01/2023	
3	FINAL SUBMITTAL	10/02/2023	

CITY OF GARDENA
DEPARTMENT OF PUBLIC WORKS - ENGINEERING
PV DETAILS
COMMUNITY AQUATICS & SENIOR CENTER
PV-0.04

	INITAL	DATE
DESIGNED BY	SR	11/14/2022
DRAWN BY	SR	09/26/2023
CHECKED BY	BZ	09/28/2023

APPROVED BY:
DATE DIRECTOR OF PUBLIC WORKS
SHT. 180 OF 195 DWG. NO. 5-2606

FILE PATH: I:\535\050\PV-0.04_535005.DWG
PLOT TIME: 10/12/2023 12:01:36 PM

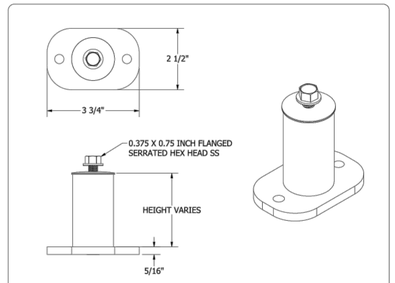

PART # TABLE	
P/N	DESCRIPTION
004300M	3" 2 PIECE STANDOFF MILL
004300D	3" 2 PIECE STANDOFF DARK
004400M	4" 2 PIECE STANDOFF MILL
004400D	4" 2 PIECE STANDOFF DARK
004600M	6" 2 PIECE STANDOFF MILL
004600D	6" 2 PIECE STANDOFF DARK
004700M	7" 2 PIECE STANDOFF MILL
004700D	7" 2 PIECE STANDOFF DARK

UNIRAC
1411 BROADWAY BLVD. NE
ALBUQUERQUE, NM 87102 USA
PHONE: 505.242.6411
WWW.UNIRAC.COM

PRODUCT LINE:	SM
DRAWING TYPE:	ASSEMBLY DETAIL
DESCRIPTION:	STANDOFF
REVISION DATE:	5/19/2020

DRAWING NOT TO SCALE ALL DIMENSIONS ARE NOMINAL

PRODUCT PROTECTED BY ONE OR MORE US PATENTS

LEGAL NOTICE

SM-A12

SHEET

NOTES:
1. SEE SM TIH INSTALLATION GUIDE FOR ASSEMBLY INSTRUCTIONS.

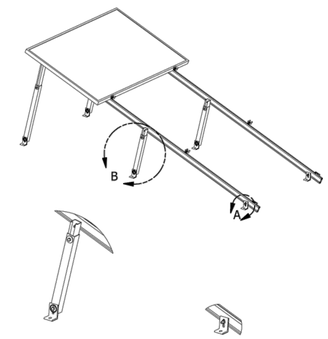

DETAIL B
REAR TILT LEG

DETAIL A
L FOOT

UNIRAC
1411 BROADWAY BLVD. NE
ALBUQUERQUE, NM 87102 USA
PHONE: 505.242.6411
WWW.UNIRAC.COM

PRODUCT LINE:	SOLARMOUNT TILT
DRAWING TYPE:	ASSEMBLY
DESCRIPTION:	HIGH PROFILE TILT
REVISION DATE:	9/27/2017

DRAWING NOT TO SCALE ALL DIMENSIONS ARE NOMINAL

PRODUCT PROTECTED BY ONE OR MORE US PATENTS

LEGAL NOTICE

SM-A08

SHEET

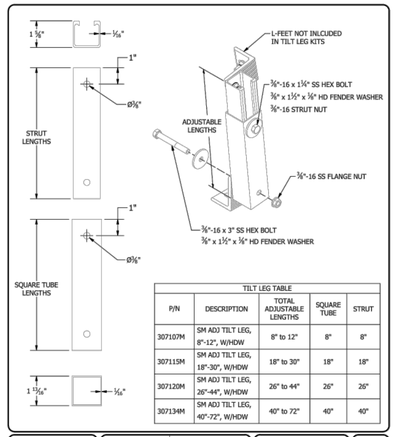

TILT LEG TABLE				
P/N	DESCRIPTION	TOTAL ADJUSTABLE LENGTHS	SQUARE TUBE	STRUT
307107M	SM ADJ TILT LEG, 8"-12", W/HDW	8" to 12"	8"	8"
307115M	SM ADJ TILT LEG, 18"-30", W/HDW	18" to 30"	18"	18"
307120M	SM ADJ TILT LEG, 26"-44", W/HDW	26" to 44"	26"	26"
307134M	SM ADJ TILT LEG, 40"-72", W/HDW	40" to 72"	40"	40"

UNIRAC
1411 BROADWAY BLVD. NE
ALBUQUERQUE, NM 87102 USA
PHONE: 505.242.6411
WWW.UNIRAC.COM

PRODUCT LINE:	SOLARMOUNT TILT
DRAWING TYPE:	ASSEMBLY
DESCRIPTION:	ADJUSTABLE TILT LEG
REVISION DATE:	9/27/2017

DRAWING NOT TO SCALE ALL DIMENSIONS ARE NOMINAL

PRODUCT PROTECTED BY ONE OR MORE US PATENTS

LEGAL NOTICE

SM-A09

SHEET

NOTES:
1. SEE SM TIH INSTALLATION GUIDE FOR ASSEMBLY INSTRUCTIONS.

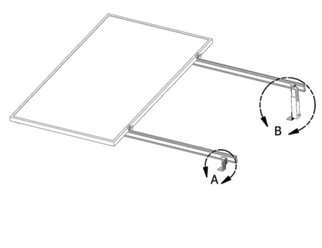



DETAIL A
FRONT L-FOOT HINGE



DETAIL B
REAR TILT LEG

UNIRAC
1411 BROADWAY BLVD. NE
ALBUQUERQUE, NM 87102 USA
PHONE: 505.242.6411
WWW.UNIRAC.COM

PRODUCT LINE:	SOLARMOUNT TILT
DRAWING TYPE:	ASSEMBLY
DESCRIPTION:	LOW PROFILE TILT
REVISION DATE:	9/27/2017

DRAWING NOT TO SCALE ALL DIMENSIONS ARE NOMINAL

PRODUCT PROTECTED BY ONE OR MORE US PATENTS

LEGAL NOTICE

SM-A07

SHEET

UNIRAC SOLARMOUNT DETAILS

SCALE: NO SCALE

2

Three Phase Inverters for the 277/480V Grid(1)
For North America

SE20KUS / SE30KUS / SE33.3KUS / SE40KUS

MODEL NUMBER	SE20KUS	SE30KUS	SE33.3KUS	SE40KUS	UNITS
APPLICABLE TO INVERTERS WITH PART NUMBER	SE[XXX]-USXX[XXXXX]	SE[XXX]-USX[XXXXX]			
OUTPUT					
Rated AC Power Output	20000	30000	33300	40000	W
Maximum apparent AC output power	20000	30000	33300	40000	VA
AC Output Line Connections	4W + PE	3W + PE, 4W + PE			
AC Output Voltage Minimum-Nominal-Maximum(2) (L-N)	244 - 277 - 305				Vac
AC Output Voltage Minimum-Nominal-Maximum(2) (L-L)	423.3 - 480 - 529				Vac
AC Frequency Min-Nom-Max(2)	59.3 - 60 - 60.5				Hz
Maximum Continuous Output Current (per Phase)	24	36.25	40	48.25	Aac
GFDI Threshold	1				A
Utility Monitoring, Islanding Protection, Country Configurable Set Points	Yes				
Total Harmonic Distortion	≤ 3				%
Power Factor Range	+/- 0.85 to 1				
INPUT					
Maximum DC Power (Module STC)	27000	40000	50000	60000	W
Transformer-less, Ungrounded	Yes				
Maximum Input Voltage DC+ to DC-	1000				Vdc
Operating Voltage Range	840 - 1000				Vdc
Maximum Input Current	26.5	36.25	40	48.25	Adc
Maximum Input Short Circuit Current	33		55		Adc
Reverse-Polarity Protection	Yes				
Ground-Fault Isolation Detection	1MΩ Sensitivity		167kΩ Sensitivity(3)		
CEC Weighted Efficiency	98		99.5		%
Night-time Power Consumption	<3		<4		W
ADDITIONAL FEATURES					
Supported Communication Interfaces	2 x RS485, Ethernet, Cellular (optional)				
Inverter Commissioning	With the SetApp mobile application using built-in access point for local connection				
Arc Fault Protection	Integrated, User Configurable (according to UL1699B)				
Rapid Shutdown	NEC2014, NEC2017 and NEC2020 compliant/certified				
RS485 Surge Protection Plug-in	Supplied with the Inverter, Built-in				
DC Surge Protection	Type II, field replaceable, Built-in				
AC Surge Protection	Type II, field replaceable, Built-in				
DC Fuses (Single Pole)	30A, Built-in				
Smart Energy Management	Export Limitation				
DC SAFETY SWITCH					
DC Disconnect	Integrated				
STANDARD COMPLIANCE					
Safety	UL1741, UL1741 SA, UL1699B, CSA C22.2, Canadian AFCI according to T.I.L. M-07				
Grid Connection Standards	IEEE1547, Rule 21, Rule 14 (HI)				
Emissions	FCC part15 class A				
INSTALLATION SPECIFICATIONS					
AC output conduit size / AWG range	3/4" minimum / 12-6 AWG	3/4" or 1" / 6 - 10 AWG			
DC input conduit size / AWG range	3/4" or 1" / 6 - 12 AWG				
Number of DC inputs pairs	3	4			
Dimensions with Safety Switch (H x W x D)	30.5 x 12.5 x 10.5 / 775 x 315 x 260	31.0 x 12.5 x 11.8 / 808 x 317 x 300			in / mm
Weight with Safety Switch	74.2 / 33.7	78.2 / 35.5			lb / kg
Cooling	Fans (user replaceable)				
Noise	< 50	< 60			dBA
Operating Temperature Range	-40 to +140 / -40 to +60(4)				°F / °C
Protection Rating	NEMA 3R				
Mounting	Bracket provided				

(1) For 120/208V inverters refer to: https://www.solaredge.com/sites/default/files/se-three-phase-us-inverters-208V-ratings-datasheet.pdf
(2) For other regional settings please contact SolarEdge support
(3) Where permitted by local regulations
(4) For power de-rating information refer to: https://www.solaredge.com/sites/default/files/se-temperature-derating-note-na.pdf

© SolarEdge Technologies, Inc. All rights reserved. SOLAREDGE, the SolarEdge logo, OPTIMIZED BY SOLAREDGE are trademarks or registered trademarks of SolarEdge Technologies, Inc.
All other trademarks mentioned herein are trademarks of their respective owners. Date: 05/2022/ V1.1/ EN. Subject to change without notice.

CE

Three Phase Inverters for the 277/480V Grid
For North America

SE20KUS / SE30KUS / SE33.3KUS / SE40KUS

INVERTERS

12-20 YEAR WARRANTY

The best choice for SolarEdge enabled systems

- Specifically designed to work with power optimizers
- Quick and easy inverter commissioning directly from a smartphone using the SolarEdge SetApp
- Fixed voltage inverter for superior efficiency (98.5%) and longer strings
- Built-in type 2 DC and AC Surge Protection, to better withstand lightning events
- Small, lightest in its class, and easy to install outdoors or indoors on provided bracket
- Integrated arc fault protection and rapid shutdown for NEC 2014 and 2017, per article 690.11 and 690.12
- Built-in module-level monitoring with Ethernet, wireless or cellular communication for full system visibility
- Integrated Safety Switch
- UL1741 SA certified, for CPUC Rule 21 grid compliance

solaredge.com

solaredge

INVERTERS

SCALE: NO SCALE

1

DIGALERT
DIAL TOLL FREE
1-800-422-4133
AT LEAST TWO DAYS
BEFORE YOU DIG
UNDERGROUND SERVICE ALERT OF SOUTHERN CALIFORNIA

BASIS OF BEARINGS:

BEARINGS SHOWN HEREON ARE BASED ON THE CENTERLINE OF 162 ND STREET (FORMERLY MARKET STREET) BEING N 89° 55' 30" E SHOWN ON TRACT NO. 10901, M.B. 254/31-32

BENCHMARK:

THE CITY OF GARDENA BENCHMARK NO. 5D-15 ELEV. = 43.508

CONSULTANT:

FBA Engineering
Consulting Electrical Engineers
150 Paularino Avenue Suite A120
Costa Mesa, CA 92626
949.852.9905 • 949.852.1657 (fax)
fbaengr.com
FBA Job Number: 535050

REGISTERED PROFESSIONAL ENGINEER No. 10372 Exp. 09-30-24 ELECTRICAL STATE OF CALIFORNIA

05/01/2023

PREPARED UNDER THE SUPERVISION OF:

RJM DESIGN GROUP
31591 Camino Capistrano
San Juan Capistrano, CA 92675
www.RJMdesigngroup.com
[949] 493-2690 fax
[949] 493-2600 phone

REGISTERED LANDSCAPE ARCHITECT — Signature — 09-30-2023 Renewal Date — 1-16-2024 Date — STATE OF CALIFORNIA

REVISIONS

NO.	DESCRIPTION	DATE	APPROVED
1	90% CD SUBMITTAL	12/15/2022	
2	100% CD SUBMITTAL	05/01/2023	
3	FINAL SUBMITTAL	10/02/2023	

CITY OF GARDENA
DEPARTMENT OF PUBLIC WORKS - ENGINEERING

PV DETAILS

COMMUNITY AQUATICS & SENIOR CENTER
PV-0.05

	INITAL	DATE
DESIGNED BY	SR	11/14/2022
DRAWN BY	SR	09/26/2023
CHECKED BY	BZ	09/28/2023

APPROVED BY:

DATE DIRECTOR OF PUBLIC WORKS

SHT. 181 OF 195 DWG. NO. 5-2606

FBA Engineering / Plot Date: 9/26/2023 11:21 AM / Plotted by: Steve Roth / Drawing Location: I:\535\050\PV-0.05_535050.dwg

FILE PATH: I:\535\050\PV-0.05_535050.DWG
PLOT TIME: 9/26/2023 11:21:01 AM

PLAN NOTES

1. REFER TO PV-0.02 FOR FEEDER REQUIREMENTS.
2. FEEDER "PV". RISE UP THROUGH WALL TO ROOF. REFER TO PV-2.01 FOR CONTINUATION.

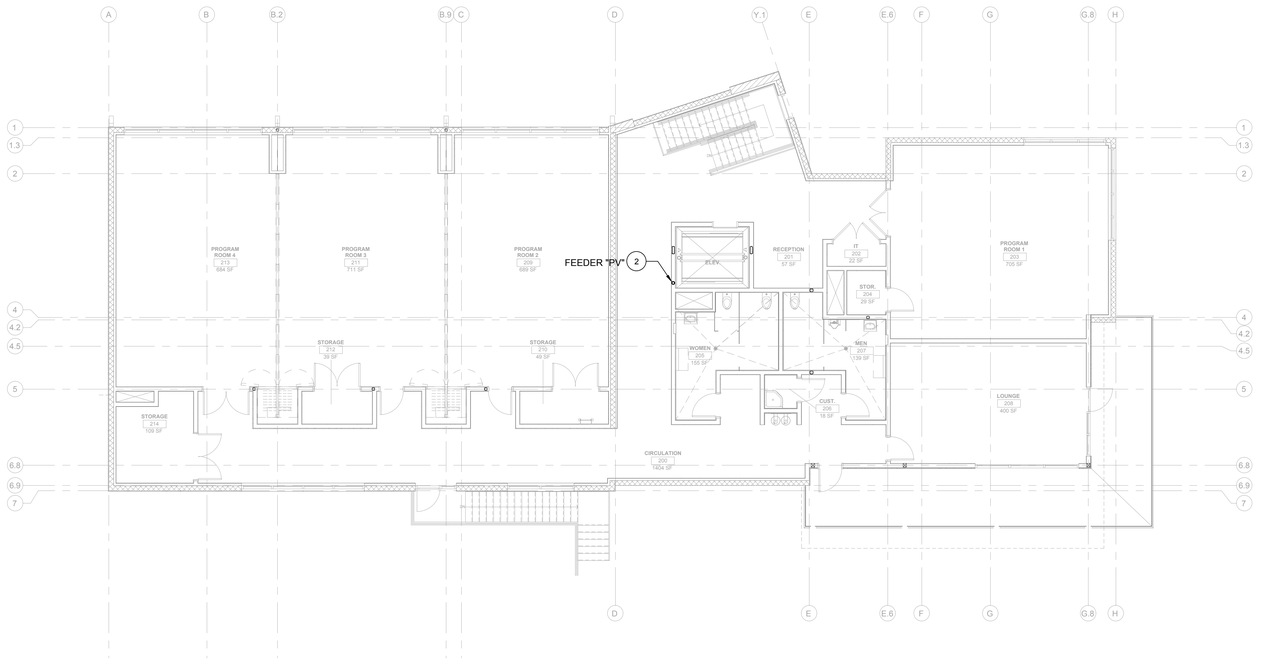

0 4 8 16

SCALE: 1 inch = 8 ft.

SECOND FLOOR PHOTOVOLTAIC ELECTRICAL PLAN | SCALE: 1/8"=1'-0" | 2

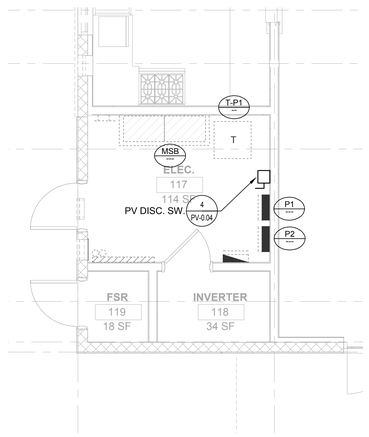

ENLARGED ELECTRICAL ROOM | SCALE: 1/4"=1'-0" | 3

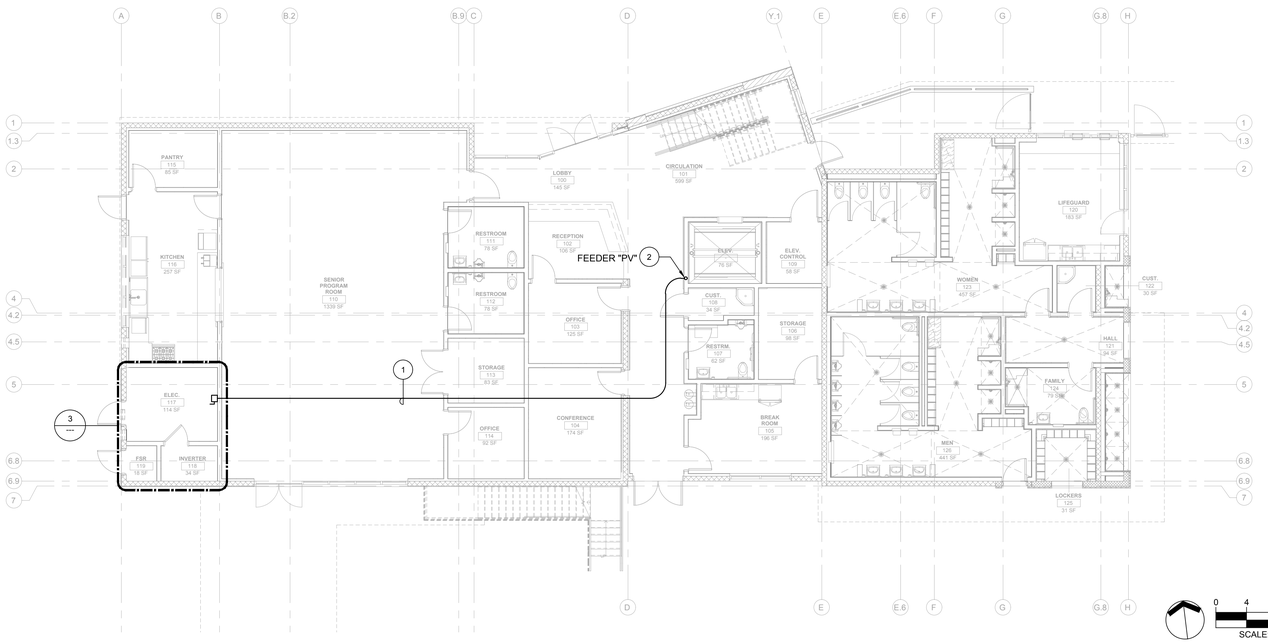

0 4 8 16

SCALE: 1 inch = 8 ft.

FIRST FLOOR PHOTOVOLTAIC ELECTRICAL PLAN | SCALE: 1/8"=1'-0" | 1

DIGALERT
DIAL TOLL FREE 1-800-422-4133
AT LEAST TWO DAYS BEFORE YOU DIG
UNDERGROUND SERVICE ALERT OF SOUTHERN CALIFORNIA

BASIS OF BEARINGS:

BEARINGS SHOWN HEREON ARE BASED ON THE CENTERLINE OF 162 ND STREET (FORMERLY MARKET STREET) BEING N 89° 55' 30" E SHOWN ON TRACT NO. 10901, M.B. 254/31-32

BENCHMARK:

THE CITY OF GARDENA BENCHMARK NO. 5D-15 ELEV. = 43.508

CONSULTANT:

FBA Engineering
Consulting Electrical Engineers
150 Paularino Avenue Suite A120
Costa Mesa, CA 92626
949.852.9995 • 949.852.1657 (fax)
fbaengr.com
FBA Job Number: 535050

REGISTERED PROFESSIONAL ENGINEER No. 10372 Exp. 09-30-24 ELECTRICAL STATE OF CALIFORNIA

05/01/2023

PREPARED UNDER THE SUPERVISION OF:

RJM DESIGN GROUP
31591 Camino Capistrano
San Juan Capistrano, CA 92675
www.RJMdesigngroup.com
[949] 493-2650 fax
[949] 493-2600 phone

LICENSED LANDSCAPE ARCHITECT Signature 09-30-2023 Renewal Date STATE OF CALIFORNIA

REVISIONS			
NO.	DESCRIPTION	DATE	APPROVED
1	90% CD SUBMITTAL	12/15/2022	
2	100% CD SUBMITTAL	05/01/2023	
3	FINAL SUBMITTAL	10/02/2023	

CITY OF GARDENA
DEPARTMENT OF PUBLIC WORKS - ENGINEERING

PHOTOVOLTAIC ELECTRICAL PLANS

COMMUNITY AQUATICS & SENIOR CENTER

PV-1.01

	INITIAL	DATE
DESIGNED BY	SR	11/14/2022
DRAWN BY	SR	09/26/2023
CHECKED BY	BZ	09/28/2023

APPROVED BY:

DATE

DIRECTOR OF PUBLIC WORKS

SHT. 182 OF 195 DWG. NO. 5-2606

FILE PATH: I:\535\050\PV-1.01_535050.DWG
PLOT TIME: 9/26/2023 11:21:04 AM

FBA Engineering / Plot Date: 9/26/2023 11:21 AM / Plotted by: Steve Roth / Drawing Location: I:\535\050\PV-1.01_535050.dwg

GENERAL NOTES:

1. SOLAR PHOTOVOLTAIC POWER SYSTEMS SHALL BE INSTALLED IN ACCORDANCE WITH SECTIONS 1204.2 THROUGH 1204.5, THE CALIFORNIA BUILDING CODE OR CALIFORNIA RESIDENTIAL CODE, AND CALIFORNIA ELECTRICAL CODE. FIRE CODE 1204.1.

2. CONDUIT, WIRING SYSTEMS, AND REACEWAYS FOR PHOTOVOLTAIC CIRCUITS SHALL BE LOCATED AS CLOSE AS POSSIBLE TO THE RIDGE OR HIP OR VALLEY AND FROM THE HIP OR VALLEY AS DIRECTLY AS POSSIBLE TO AN OUTSIDE WALL TO REDUCE TRIP HAZARDS AND MAXIMIZE VENTILATION OPPORTUNITIES. CONDUIT RUNS BETWEEN SUB ARRAYS AND TO DC COMBINER BOXES SHALL BE INSTALLED IN A MANNER THAT MINIMIZES THE TOTAL AMOUNT OF CONDUIT ON THE ROOF BY TAKING THE SHORTEST PATH FROM THE ARRAY TO THE DC COMBINER BOX. THE DC COMBINER BOX SHALL BE LOCATED SUCH THAT CONDUIT RUNS ARE MINIMIZED IN THE PATHWAY BETWEEN ARRAYS. DC WIRING SHALL BE INSTALLED IN METALLIC CONDUIT OR RACEWAYS WHEN LOCATED WITHIN ENCLOSED SPACES IN A BUILDING. CONDUIT SHALL RUN ALONG THE BOTTOM OF LOAD BEARING MEMBERS. FIRE CODE 1204.3.4.

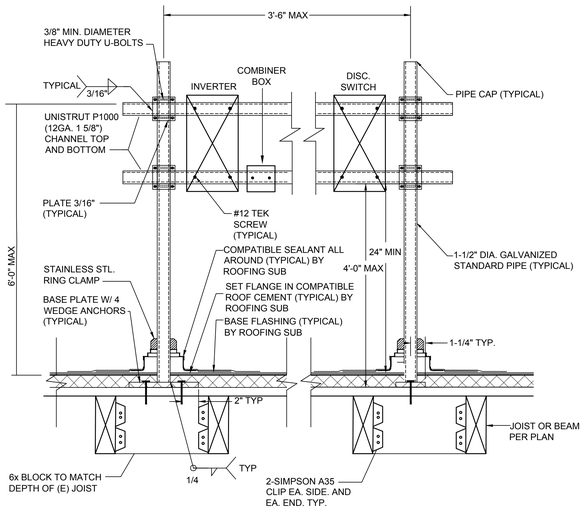

ROOF INVERTER & DISC. SWITCH ANCHORAGE DETAIL | SCALE: N.T.S. | 2

PLAN NOTES

1. (1) 3/4"C. FROM FLOOR BELOW. SEE PV-1.01 FOR CONTINUATION.
2. PROPOSED LOCATION OF PV DISC. SWITCH AND INVERTER.
3. REFER TO PV-0.02 FOR CONDUIT/CONDUCTOR REQUIREMENTS. ROUTE IN CEILING SPACE BELOW.
4. DC CONDUIT/CONDUCTORS. REFER TO GENERAL NOTES THIS SHEET FOR ADDITIONAL REQUIREMENTS. ROUTE IN CEILING SPACE BELOW.

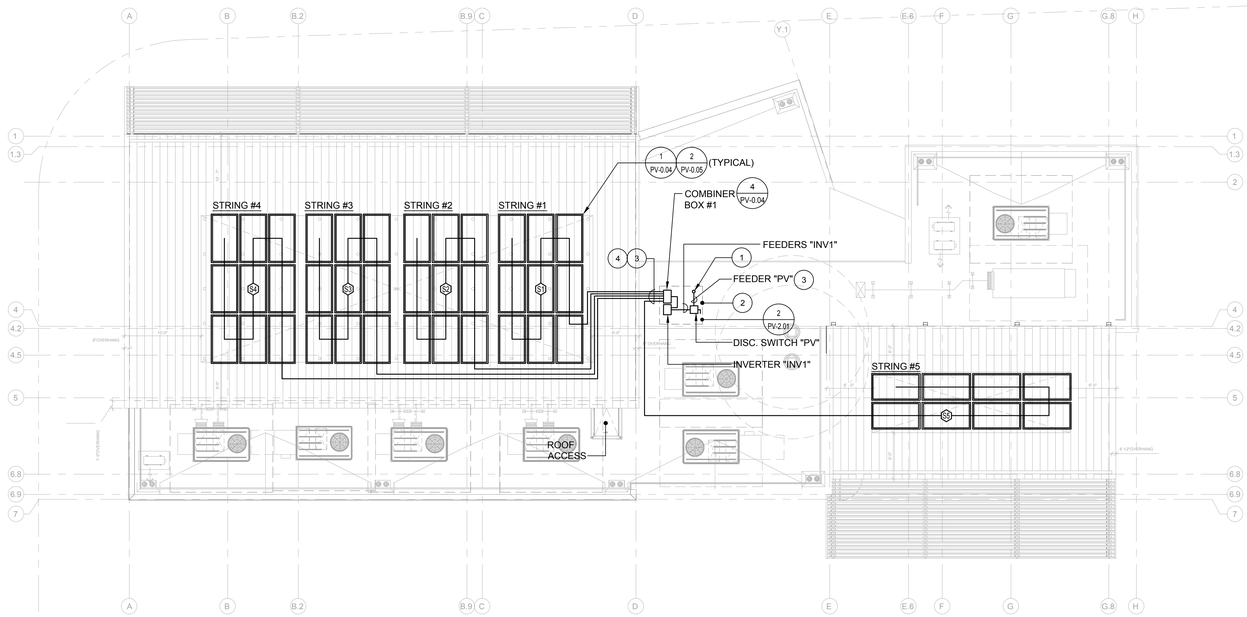

0 4 8 16
SCALE: 1 inch = 8 ft.

PHOTOVOLTAIC ROOF ELECTRICAL PLAN | SCALE: 1/4"=1'-0" | 1

DIGALERT
DIAL TOLL FREE 1-800-422-4133
AT LEAST TWO DAYS BEFORE YOU DIG
UNDERGROUND SERVICE ALERT OF SOUTHERN CALIFORNIA

BASIS OF BEARINGS:

BEARINGS SHOWN HEREON ARE BASED ON THE CENTERLINE OF 162 ND STREET (FORMERLY MARKET STREET) BEING N 89° 55' 30" E SHOWN ON TRACT NO. 10901, M.B. 254/31-32

BENCHMARK:

THE CITY OF GARDENA BENCHMARK NO. 5D-15 ELEV. = 43.508

CONSULTANT:
FBA Engineering
Consulting Electrical Engineers
150 Paularino Avenue Suite A120
Costa Mesa, CA 92626
949.852.9995 • 949.852.1657 (fax)
fbaengr.com
FBA Job Number: 535050
REGISTERED PROFESSIONAL ENGINEER 10372 EXP. 09-30-24 ELECTRICAL STATE OF CALIFORNIA
05/01/2023

PREPARED UNDER THE SUPERVISION OF:
RJM DESIGN GROUP
31591 Camino Capistrano
San Juan Capistrano, CA 92675
www.RJMdesigngroup.com
[949] 493-2690 fax
[949] 493-2600 phone
LICENSED LANDSCAPE ARCHITECT STATE OF CALIFORNIA
Signature 05/26/2023 5:56:25PM

REVISIONS			
NO.	DESCRIPTION	DATE	APPROVED
1	90% CD SUBMITTAL	12/15/2022	
2	100% CD SUBMITTAL	05/01/2023	
3	FINAL SUBMITTAL	10/02/2023	

CITY OF GARDENA
DEPARTMENT OF PUBLIC WORKS - ENGINEERING
PHOTOVOLTAIC ROOF ELECTRICAL PLAN
COMMUNITY AQUATICS & SENIOR CENTER
PV-2.01

	INITAL	DATE	APPROVED BY:
DESIGNED BY	SR	11/14/2022	
DRAWN BY	SR	09/26/2023	DATE
CHECKED BY	BZ	09/28/2023	DIRECTOR OF PUBLIC WORKS

SHT. 183 OF 195 DWG. NO. 5-2606

FBA Engineering / Plot Date: 9/26/2023 11:21 AM / Plotted by: Steve Roth / Drawing Location: I:\535\050\PV-2.01_535050.dwg
REF FILES: I:\535\050\PV-2.01_535050.DWG
PLOT TIME: 9/26/2023 11:21:07 AM

FBA Engineering / Plot Date: 9/26/2023 11:12 AM / Plotted by: Steve Roth / Drawing Location: I:\535\050\SEC001.dwg

SECURITY SYSTEM GENERAL NOTES

1. THESE DRAWINGS AND SPECIFICATIONS ARE INTENDED TO COVER A COMPLETE INSTALLATION OF THE SECURITY SYSTEM (ACCESS CONTROL, BUILDING INTRUSION & CONDUIT ONLY & OUTLET BOXES FOR FUTURE CLOSED CIRCUIT TELEVISION). THE OMISSION OR EXPRESSED REFERENCE TO ANY ITEM OF LABOR OR MATERIALS REQUIRED FOR THE PROPER EXECUTION OF THE WORK IN ACCORDANCE WITH PRESENT PRACTICE OF THE TRADE SHALL NOT RELIEVE THE CONTRACTOR FROM PROVIDING SUCH ADDITIONAL LABOR AND MATERIALS.

2. THE DESIGN-BUILD SECURITY SYSTEMS CONTRACTOR IS RESPONSIBLE FOR THE DESIGN AND CONSTRUCTION OF A COMPLETE SECURITY SYSTEM BASED ON THESE CONCEPTUAL PLANS AND SPECIFICATIONS.

3. THE SECURITY SYSTEMS CONTRACTOR IS REQUIRED TO REVIEW ALL OF THE PROJECT'S CONSTRUCTION DOCUMENTS AS A WHOLE IN ORDER TO IDENTIFY ALL REQUIREMENTS THAT DIRECTLY OR INDIRECTLY AFFECT ITS PORTION OF THE SECURITY SYSTEMS WORK, EVEN REQUIREMENTS LOCATED IN SECTIONS DESIGNATED AS APPLICABLE TO OTHER TRADES. IN CASE OF CONFLICTS, THE CONTRACTOR SHALL EITHER OBTAIN DIRECTION FROM THE OWNER'S REPRESENTATIVE OR OTHERWISE APPLY THE MORE STRINGENT REQUIREMENT

4. REFER TO THE ELECTRICAL PLANS AND SPECIFICATIONS FOR ADDITIONAL INFORMATION AND REQUIREMENTS. ALL APPLICABLE PORTIONS SHALL APPLY TO THE SECURITY SYSTEMS SCOPE OF WORK.

5. THE SECURITY SYSTEMS AS SHOWN ON THESE PLANS IS CONCEPTUAL ONLY AND IS BASED ON INITIAL OWNER AND DESIGN TEAM INPUT RECEIVED. THE SECURITY SYSTEMS CONTRACTOR IS RESPONSIBLE FOR MODIFYING THE SECURITY SYSTEMS AND DESIGN INTENT TO THE ACTUAL CONDITIONS OF THIS PROJECT AND THE OWNER'S FINAL NEEDS. COORDINATE, CONFIRM AND FINALIZE THE SYSTEMS EQUIPMENT, FEATURES, COVERAGE AND PROGRAMMING WITH THE OWNER'S REPRESENTATIVE. VERIFY WITH THE OWNER'S REPRESENTATIVE THE LEVEL OF INTEGRATION WITH OTHER SYSTEMS.

6. THE SECURITY SYSTEMS CONTRACTOR SHALL DEVELOP A COMPLETE SET OF CONSTRUCTION DOCUMENTS, PLANS AND SPECIFICATIONS AND SUBMIT TO THE OWNER'S REPRESENTATIVE FOR APPROVAL BEFORE THE START OF CONSTRUCTION.

7. PROVIDE ALL REQUIRED MATERIALS INCLUDING BUT NOT LIMITED TO EQUIPMENT, HARDWARE, DEVICES, RACKS, TERMINAL CABINETS, CONTROLLERS, POWER SUPPLIES, WIRING AND CABLING, WIRE/CABLING MANAGEMENTS SYSTEMS AND SUPPORTS, CONDUITS AND RACEWAYS, ETC. FOR A COMPLETE AND OPERABLE SECURITY SYSTEMS.

8. WIRELESS DEVICES AND/OR COMPONENTS ARE NOT ALLOWED AS PART OF THE BASE BID UNLESS OTHERWISE NOTED. APPROVAL OF WIRELESS SYSTEMS SHALL BE AT THE DISCRETION OF THE OWNER'S REPRESENTATIVE.

9. ALL SYSTEM SOFTWARE PLATFORMS AND QUANTITY OF LICENSES SHALL BE PROVIDED FOR ALL FURNISHED EQUIPMENT AS PART OF THE SECURITY SYSTEMS CONTRACTORS COMPLETE AND OPERABLE SYSTEMS. ALL SOFTWARE PLATFORMS INSTALLED SHALL BE THE FULL AND COMPLETE VERSION OF THE MOST RECENT SOFTWARE PACKAGES AVAILABLE AT THE TIME OF THE INSTALLATION. THE OWNER'S REPRESENTATIVE SHALL BE PROVIDED WITH THE FORMAL COPIES OF ALL LICENSES AND FURNISHED WITH ALL USERNAMES AND PASSWORDS FOR THE SYSTEM AS PART OF THE CLOSE-OUT DOCUMENTATION.

10. THE SECURITY SYSTEMS CONTRACTOR SHALL BE A LICENSED (C-7) LOW VOLTAGE SYSTEMS CONTRACTOR AND A LICENSED (C-10) ELECTRICAL CONTRACTOR AND SHALL HAVE BEEN IN BUSINESS FURNISHING AND INSTALLING SIMILAR SYSTEMS IN SCOPE AND SIZE FOR A MINIMUM OF FIVE (5) YEARS.

11. THE SECURITY SYSTEMS CONTRACTOR SHALL BE A FACTORY AUTHORIZED DISTRIBUTOR, INSTALLER AND WARRANTY PROVIDER FOR THE MANUFACTURER OF THE EQUIPMENT TO BE INSTALLED. PROVIDE LETTER FROM THE SYSTEMS MANUFACTURERS CERTIFYING THAT THE CONTRACTOR IS AN AUTHORIZED DISTRIBUTOR AND INSTALLER OF THE EQUIPMENT. PROVIDE CERTIFICATES OF TRAINING FOR PERSONNEL PERFORMING THE WORK.

12. THE SECURITY SYSTEMS CONTRACTOR SHALL MAINTAIN A FULLY EQUIPPED SERVICE DEPARTMENT CAPABLE OF FURNISHING ADEQUATE REPAIR SERVICES FOR THE WARRANTED EQUIPMENT WITH RESPONSE TIMES TO THE PROJECT SITE WITHIN 4-HOURS.

13. ALL WORK AND EQUIPMENT SHALL BE GUARANTEED IN WRITING FOR A PERIOD OF 1-YEAR AFTER FINAL ACCEPTANCE OF WORK. PROVIDE AN EXTENDED 1-YEAR WARRANTY FOR A TOTAL OF 2-YEARS FROM FINAL ACCEPTANCE OF WORK.

14. THE CONSTRUCTION DOCUMENTS, PLANS AND SPECIFICATIONS AND ALL WORK AND MATERIALS SHALL BE IN FULL ACCORDANCE WITH ALL LEGAL AND INDUSTRY REQUIREMENTS AND STANDARDS INCLUDING WITHOUT LIMITATION THE FOLLOWING:

    A. CALIFORNIA CODE OF REGULATIONS TITLE 24, PARTS 1 AND 2 (CALIFORNIA BUILDING CODE), 2022 EDITION.
    B. CALIFORNIA CODE OF REGULATIONS TITLE 24, PART 3 (CALIFORNIA ELECTRICAL CODE), 2022 EDITION.
    C. CALIFORNIA CODE OF REGULATIONS TITLE 24, PART 9 (CALIFORNIA FIRE CODE), 2022 EDITION.
    D. OTHER REGULATING AGENCIES WHICH MAY HAVE AUTHORITY OVER ANY PORTION OF THE WORK, INCLUDING THE STATE OF CALIFORNIA DIVISION OF INDUSTRIAL SAFETY, AND THOSE CODES AND STANDARDS LISTED IN THESE NOTES AND SPECIFICATIONS.
    E. THE ELECTRICAL SYSTEMS FUNCTIONALITY STANDARDS SET FORTH IN TITLE 7 OF THE CALIFORNIA CIVIL CODE (THE "RIGHT TO REPAIR ACT").
    F. THE MANUFACTURER'S REQUIREMENTS OR RECOMMENDATIONS FOR ANY INCORPORATED PRODUCTS.
    G. THE MOST CURRENT APPROVED ISSUES OF ANY NOTED SPECIFICATIONS, CODES AND STANDARDS, INCLUDING SUPPLEMENTS, UNLESS NOTED OTHERWISE.

15. IN INTERPRETING THESE PLANS, THE FOLLOWING GENERAL RULES APPLY:

    A. WRITTEN DIMENSIONS SHALL TAKE PRECEDENCE OVER SCALED DRAWINGS.
    B. SCALED DIMENSIONS AND GRAPHICALLY SHOWN LOCATIONS ARE TO BE CONSIDERED ONLY APPROXIMATE, FIELD VERIFY DIMENSIONS PRIOR TO BID.
    C. BECAUSE THE PLANS ARE INTENDED TO SET FORTH THE REQUIREMENTS FOR CONSTRUCTION IN ONLY AN INDUSTRY-STANDARD LEVEL OF QUALITY AND DETAIL, AND THEREFORE ARE INTENDED TO BE SUPPLEMENTED BY APPROPRIATE REQUESTS FOR CLARIFICATION AND INFORMATION, ERRORS AND OMISSIONS AND TO BRING THESE ERRORS AND OMISSIONS TO THE ATTENTION OF AN APPROPRIATE OWNER REPRESENTATIVE IN A TIMELY MANNER AND ASSUMES THE RISK OF THE CONSEQUENCES OF FAILING TO DO SO BEFORE BIDDING OR OTHERWISE PROCEEDING.
    D. THE CONTRACTOR SHALL REVIEW AND VERIFY ALL DIMENSIONS PRIOR TO STARTING CONSTRUCTION AND NOTIFY THE ELECTRICAL ENGINEER IMMEDIATELY OF ANY DISCREPANCIES OR INCONSISTENCIES.

16. SUBMIT COMPLETE CONSTRUCTION DOCUMENTS, PLANS, SPECIFICATIONS AND CATALOG DATA SHEETS FOR THE SECURITY SYSTEMS TO THE OWNER'S REPRESENTATIVE FOR APPROVAL. SUBMITTALS SHALL AT THE MINIMUM INCLUDE THE FOLLOWING:

    A. COPIES OF CONTRACTORS CURRENT C-7 LOW VOLTAGE CONTRACTOR LICENSE AND C-10 ELECTRICAL CONTRACTORS LICENSE.
    B. COPY OF THE EQUIPMENT MANUFACTURERS AUTHORIZATION LETTERS CERTIFYING THE CONTRACTOR AS AN AUTHORIZED DISTRIBUTOR AND INSTALLER.
    C. COPIES OF CERTIFICATES OF TRAINING FOR THE INSTALLING PERSONNEL AND PROOF THAT THEY ARE LOCATED AT THE CONTRACTOR'S LOCAL FACILITY.
    D. LIST OF PROJECTS SIMILAR IN SCOPE AND SIZE THAT HAVE BEEN COMPLETED IN THE LAST FIVE (5) YEARS.
    E. MANUFACTURERS AND CONTRACTORS' WARRANTIES.
    F. PLANS FOR THE SITE AND BUILDING AT THE SAME SCALE AS THE CONTRACT DRAWINGS. PLANS SHALL SHOW WALLS, DOORS, WINDOWS, ROOM NUMBERS, ROOM NAMES. THE PLANS SHALL INCLUDE THE TYPE AND LOCATION OF ALL EQUIPMENT, HARDWARE, DEVICES, RACKS, TERMINAL CABINETS, CONTROLLERS, WIRING AND CABLING, CONDUIT AND RACEWAYS, ETC.
    G. PLANS SHALL INCLUDE LEGENDS, DEVICE AND BACKBOX MOUNTING REQUIREMENTS AND HEIGHTS. THE MOUNTING HEIGHTS SHALL BE SYMMETRICAL FOR ALL TYPES OF DEVICES.
    H. PLANS SHALL INCLUDE RISER DIAGRAMS, SINGLE LINE DIAGRAMS, WIRING DIAGRAMS CALCULATIONS FOR THE COMPLETE SYSTEM.
    I. PLANS SHALL SHOW INTERFACE WITH OTHER SYSTEMS THAT ARE REQUIRED TO BE INTEGRATED.
    J. MANUFACTURERS CATALOG DATA AND CUT SHEETS FOR ALL EQUIPMENT.
    K. TESTING AND COMMISSIONING PROCEDURES COORDINATED WITH THE OWNER'S REQUIREMENTS AND MANUFACTURE'S STANDARDS INCLUDING ANSI/TIS-568-C.0, C.1, C.2 AND C.3.

17. SUBMITTALS WILL BE REVIEWED BY THE ELECTRICAL ENGINEER, IF AT ALL, ONLY PURSUANT TO THE INDUSTRY-STANDARD PROTOCOL SET FORTH IN AIA DOCUMENT A201, AND IN NO EVENT WILL THE SUBMITTAL REVIEW PROCESS RELIEVE OR LESSEN THE SUBMITTING CONTRACTOR'S RESPONSIBILITY FOR AN INAPPROPRIATE SUBMITTAL.

18. TRAINING - PROVIDE OWNER TRAINING FOR UP TO (2) 4 HOUR TRAINING SESSIONS. TRAINING SHALL BE SCHEDULED WITH THE OWNER'S REPRESENTATIVE AND SHALL BE AT TIMES CONVENIENT TO THE OWNER.

19. IN THE EVENT CONFLICTS BETWEEN THE CONSTRUCTION BID DOCUMENTS, CRITERIA AND SPECIFICATIONS THE MOST STRINGENT OF REQUIREMENTS SHALL APPLY.

20. IN NO EVENT WILL ANY SITE VISITS BY THE ELECTRICAL ENGINEER CONCERN CONSTRUCTION MEANS AND METHODS OR CONSTRUCTION SAFETY, AND ALL SUCH MATTERS SHALL REMAIN THE SOLE RESPONSIBILITY OF THE CONTRACTOR.

21. COPIES OF THE PLANS PROVIDED IN ANY ELECTRONIC FORM ARE SUBJECT TO THE SAME PROVISIONS AS THE OTHER INSTRUMENTS OF SERVICE PREPARED BY OR ON BEHALF OF THE ELECTRICAL ENGINEER FOR THE PROJECT, INCLUDING WITHOUT LIMITATION THE ENGINEER'S COMMON LAW, STATUTORY OR OTHER RESERVED RIGHTS, INCLUDING COPYRIGHTS. A RECIPIENT IS GRANTED AT MOST A TRANSFERABLE NONEXCLUSIVE LICENSE TO REUSE THE PLANS SOLELY FOR PROJECT PURPOSES, AND NO RECIPIENT IS AUTHORIZED TO USE OR TO ALLOW THE USE OF ALL OR ANY PORTION OF THESE PLANS FOR ANY OTHER PURPOSE, AND ANY USE FOR ANY OTHER PURPOSE WOULD CONSTITUTE ACTIONABLE PLAGIARISM. ELECTRICAL ENGINEER PROVIDES DOCUMENTS IN AN ELECTRONIC FORM ONLY IN ITS STANDARD FORMATS AND CONVENTIONS AND WITH NO GUARANTEE OF COMPATIBILITY WITH ANY RECIPIENT'S SOFTWARE OR HARDWARE AND ANY USE WITH OR CONVERSION TO OTHER FORMATS OR CONVENTIONS, OR THE USE WITH ANY PARTICULAR SOFTWARE OR HARDWARE, IS AT THE RECIPIENT'S SOLE RISK.

22. THE DRAWINGS INDICATE, IN A DIAGRAMMATIC MANNER, THE DESIRED LOCATIONS AND ARRANGEMENT OF THE COMPONENTS OF SECURITY SYSTEMS WORK. DETERMINE EXACT SECURITY SYSTEMS EQUIPMENT, CONDUIT AND WIRING ROUTING, CONDUIT BENDS, AUXILIARY JUNCTION BOXES, SUPPORTS AND UNDEFINED CONSTRUCTION DETAILS AS A JOB CONDITION TO BE INSTALLED IN ACCORDANCE WITH THE APPLICABLE CODE REQUIREMENTS. PROPER JUDGEMENT MUST BE EXERCISED IN EXECUTING THE WORK SO AS TO SECURE THE BEST POSSIBLE INSTALLATION IN THE AVAILABLE SPACE AND TO OVERCOME LOCAL DIFFICULTIES DUE TO SPACE LIMITATIONS OR INTERFERENCE OF CONDITIONS ENCOUNTERED.

23. IN THE EVENT CHANGES IN THE INDICATED LOCATIONS OR ARRANGEMENTS ARE NECESSARY, DUE TO DEVELOPED CONDITIONS IN THE BUILDING CONSTRUCTION OR REARRANGEMENT OF EQUIPMENT, SUCH CHANGES SHALL BE MADE WITHOUT COST PROVIDING THE CHANGE IS ORDERED BEFORE THE CONDUIT RUNS, ETC., AND WORK DIRECTLY CONNECTED TO SAME IS INSTALLED AND NO EXTRA MATERIALS ARE REQUIRED.

24. PROVIDE ALL EQUIPMENT WITH ENCLOSURES LISTED OR LABELED FOR USE AND LOCATION WHERE SUCH EQUIPMENT IS INSTALLED.

25. PROVIDE UL LISTED FIRE STOP FOR ALL PENETRATIONS THROUGH FIRE RATED FLOORS, WALLS, AND CEILINGS TO MAINTAIN ALL FIRE RATINGS.

26. GROUNDING SHALL BE EXECUTED IN ACCORDANCE WITH ALL APPLICABLE CODES AND REGULATIONS, BOTH OF THE STATE OF CALIFORNIA AND LOCAL AUTHORITIES HAVING JURISDICTION.

27. CONDUIT FOR ROOF MOUNTED EQUIPMENT SHALL BE ROUTED BELOW ROOF AND WITHIN BUILDING.

28. ALL SECURITY SYSTEMS EQUIPMENT SHALL BE NEW AND BE U.L. OR ETL LISTED AND LABELED.

INTRUSION DETECTION SYSTEM SYMBOLS

IDKP	INTRUSION DETECTION KEY PAD.
PB	INTRUSION DETECTION PANIC BUTTON.
ID	INTRUSION DETECTION SYSTEM MOTION SENSOR, WALL MOUNTED.
ID	INTRUSION DETECTION SYSTEM MOTION SENSOR, CEILING MOUNTED.
BG	INTRUSION DETECTION SYSTEM BREAK GLASS SENSOR, WALL MOUNTED.
DC	INTRUSION DETECTION SYSTEM DOOR CONTACT - (COORDINATE DOOR CONTACT TYPE PER DOOR).
—ID—	INTRUSTION DETECTION SYSTEM CONDUIT WITH CONDUCTORS PER MANUFACTURER'S REQUIREMENTS. REFERENCE RISER DIAGRAM AND SPECIFICATIONS FOR ADDITIONAL INFORMATION. MINIMUM 3/4"C.

CLOSED CIRCUIT TV (CCTV) SYSTEM SYMBOLS

NOTE: PROVIDE CONDUIT ONLY AND OUTLET BOXES FOR ALL CCTV SYSTEM DEVICES DEPICTED BELOW. ACTUAL EQUIPMENT IS TO PROVIDED IN THE FUTURE BY OTHERS.

C / C	SURFACE MOUNTED (CEILING OR WALL), CLOSED CIRCUIT TELEVISION DOME TYPE CAMERA. PROVIDE WITH FLUSH 4S BACKBOX AND 3/4" CONDUIT HOMERUN TO NEAREST TEL. BACKBOARD. WALL MOUNTED LOCATIONS SHALL BE @+8'-0", OR AS DIRECTED BY ARCHITECT. "WP" INDICATES OUTDOOR MOUNTED CAMERA. PROVIDE WITH OUTDOOR RATED BACKBOX. PROVIDE BLANK COVER PLATE ON ALL BACKBOXES.
WS	CLOSED CIRCUIT TELEVISION WORKSTATION LOCATION. PROVIDE FLUSH 4S JUNCTION BOX @+18" WITH BLANK COVER PLATE & 3/4" CONDUIT HOMERUN CONTROL NEAREST TEL. BACKBOARD. WORKSTATION LOCATION TO BE VERIFIED WITH OWNER.
M	CLOSED CIRCUIT TELEVISION REMOTE MONITOR LOCATION. PROVIDE FLUSH 4S JUNCTION BOX @+18" WITH BLANK COVER PLATE & 3/4" CONDUIT HOMERUN TO NEAREST TEL. BACKBOARD. REMOTE MONITOR LOCATION TO BE VERIFIED WITH OWNER.

ACCESS CONTROL SYSTEM SYMBOLS

ACKP	ACCESS CONTROL SYSTEM KEY PAD
CR	ACCESS CONTROL SYSTEM CARD READER
PR	ACCESS CONTROL SYSTEM PROXIMITY READER - (KEY TAG OR CARD TYPE PROXY CARD)
RE	ACCESS CONTROL SYSTEM REQUEST EXIT
EL	ACCESS CONTROL SYSTEM ELECTRIFIED LOCK = (LOCK HARDWARE, SYSTEMS AND CONNECTIONS TO BE COORDINATED PER DOOR TYPE WITH ARCHITECT AND CONTRACTOR.)
MH	ACCESS CONTROL SYSTEM MAGNETIC DOOR HOLD - (HOLD TYPE, SYSTEMS AND CONNECTIONS TO BE COORDINATED PER DOOR TYPE WITH ARCHITECT AND CONTRACTOR.)
DC	ACCESS CONTROL SYSTEM DOOR CONTACT - (COORDINATE TYPE PER DOOR)
AC	ACCESS CONTROL SYSTEM AUDIBLE SOUNDER, WALL MOUNTED
AC	ACCESS CONTROL SYSTEM AUDIBLE SOUNDER, CEILING MOUNTED
C2E	"CLICK TO ENTER" SYSTEM DEVICE. PROVIDE BACKBOX & 3/4"C. HOMERUN TO IT ROOM.
—AC—	ACCESS CONTROL SYSTEM CONDUIT WITCH CONDUCTORS PER MANUFACTURER'S REQUIREMENTS. REFERENCE RISER DIAGRAM AND SPECIFICATIONS FOR ADDITIONAL INFORMATION. MINIMUM 3/4"C.

GENERAL SYMBOLS LIST

NOTE: REFERENCE ELECTRICAL SHEETS FOR ADDITIONAL GENERAL ELECTRICAL SYMBOLS. ALL APPLICABLE PORTIONS SHALL APPLY TO THIS SCOPE OF WORK AS THOUGH WRITTEN HEREIN.

J	JUNCTION BOX, FLUSH WALL MOUNTED, +18".
J	JUNCTION BOX CONCEALED ABOVE ACCESSIBLE CEILING.
J	INDICATES CONNECTION TO EQUIPMENT AS REQUIRED, TYPICAL.
	CONTROL PANEL OR TERMINAL CABINET AS INDICATED ON PLANS.
	INDICATES CONDUIT DROP WITHIN BUILDING WALL.
	INDICATES CONDUIT RISER WITHIN BUILDING WALL.
C / E-2	DETAIL CALLOUT, "C" INDICATES DETAIL, "E-2" INDICATES DRAWING WHERE DETAIL OCCURS.
1	PLAN NOTE CALLOUT. REFER TO CORRESPONDING NOTE ON DRAWING WHERE CALLOUT OCCURS.

SHEET INDEX

SEC-0.01 SYMBOLS LIST, GENERAL NOTES & SCHEDULES
SEC-0.02 ACCESS CONTROL NOTES, RISER DIAGRAM & DETAILS
SEC-0.03 INTRUSION DETECTION NOTES, RISER DIAGRAM & DETAILS
SEC-0.04 CCTV SYSTEM NOTES, RISER DIAGRAM & DETAILS

SEC-1.01 SECURITY SITE PLAN

SEC-3.01 BUILDING SECURITY PLANS
SEC-3.03 POOL BUILDING SECURITY PLAN

TE-0.01 SYMBOLS LIST, GENERAL NOTES & SCHEDULES
TE-0.02 TELECOM. RISER DIAGRAM & DETAILS

TE-1.01 SITE TELECOM PLAN

TE-3.01 BUILDING TELECOM. PLANS
TE-3.03 POOL BUILDING TELECOM. PLAN

ABBREVIATIONS

A	AMPS	FLA	FULL LOAD AMPS
AFC	ABOVE FINISHED COUNTER	G	GROUND
AFF	ABOVE FINISH FLOOR	GFI	GROUND FAULT INTERRUPTER
AFG	ABOVE FINISH GRADE	GRC/RGC	GALVANIZED RIGID CONDUIT
BDF	BUILDING DISTRIBUTION FRAME	IDF	INTERMEDIATE DISTRIBUTION FRAME
C	CONDUIT	IMC	INTERMEDIATE METALLIC TUBING
CB	CIRCUIT BREAKER	MCB	MAIN CIRCUIT BREAKER
CBC	CALIFORNIA BUILDING CODE	MDF	MAIN DISTRIBUTION FRAME
CCTV	CLOSED CIRCUIT TELEVISION	MFGR/MFR	MANUFACTURER
CFC	CALIFORNIA FIRE CODE	MIN	MINIMUM
CKT	CIRCUIT	MLO	MAIN LUGS ONLY
CO	CONDUIT ONLY W/ PULL STRING	MOCP	MAXIMUM OVER CURRENT PROTECTION
CU	COPPER	NEC	NATIONAL ELECTRIC CODE
(D)	DEMOLISH OR REMOVE	NIC	NOT IN CONTRACT
DIA	DIAMETER	NL	NIGHT LIGHT
DISC	DISCONNECT	OC	ON CENTER
EMT	ELECTRIC METALLIC TUBING	PTZ	PAN-TILT-ZOOM
(E)	EXISTING TO REMAIN	OFCI	OWNER FURNISHED, CONTRACTOR INSTALLED
EC	ELECTRICAL CONTRACTOR	UON	UNLESS OTHERWISE NOTED
EF	EXHAUST FAN	V	VOLTS
EM	EMERGENCY	VL	VERIFY LOCATION
EMS	ENERGY MANAGEMENT SYSTEM	WP	WEATHERPROOF
(ER)	EXISTING TO BE REMOVED	XFMR	TRANSFORMER
		IDCP	INTRUSION DETECTION CONTROL PANEL
		IDTC	INTRUSION DETECTION TERMINAL CABINET
		ACCP	ACCESS CONTROL CONTROL PANEL
		ACTC	ACCESS CONTROL TERMINAL CABINET
		CTVCP	CLOSED CIRCUIT TELEVISION CONTROL PANEL
		CTVTC	CLOSED CIRCUIT TELEVISION TERMINAL CABINET

CONDUIT FILL SCHEDULE

CONDUIT (EMT, TRADE SIZE)	MAXIMUM NUMBER OF CONDUCTORS/CABLES (BASED ON 40% MAX FILL RATIO)			
	UTP CAT7 (0.27" O.D.)	FIBER OPTIC (0.27" O.D.)	4#22 WEST PENN 240 (0.142" O.D.)	RG-6/U WEST PENN 841 (0.254" O.D.)
3/4"	3	3	11	3
1"	6	6	19	6
1 1/4"	10	10	30	9
1 1/2"	13	13	44	13
2"	22	22	78	24

DIVISION OF RESPONSIBILITY

	TELEVISION & ASSOCIATED AUDIO/VISUAL DEVICES	J-BOXES, CONDUIT, ROUGH-IN, 120V TO SUPPLY POWER	DEVICES AND CABLING	HEAD END UNIT	SYSTEMS INTEGRATION	DEVICE PLACEMENT LOCATIONS AND AIMING	TESTING AND COMMISSIONING	DOOR HARDWARE SPEC TO ARCHITECT/OWNER	TELEPHONE & DATA SYSTEM PROCUREMENT, INSTALLATION, AND PROGRAMMING
AUDIO/VISUAL CONTRACTOR			X	X	X	X	X		
ELECTRICAL CONTRACTOR		X	CABLING ONLY						
FIRE ALARM CONTRACTOR			X	X			X		
GENERAL CONTRACTOR		X	CABLING ONLY						
OWNER	(OFCI)					X			
OWNER'S I.T.									X
SECURITY CONTRACTOR			X	X			X		
SECURITY SYSTEMS INTEGRATOR			DEVICES ONLY	X	X			X	

LOW VOLTAGE SYSTEMS CABLING MATRIX

APPLICATION	TYPE	CABLE COLOR	SYSTEM
VOICE / DATA	CAT 7	RED/BLUE	VOIP / NETWORK DATA SYSTEMS
VOICE	CAT 7	RED	VOIP
DATA	CAT 7	BLUE	NETWORK DATA SYSTEMS
TELEVISION	CAT 7	GRAY	VIDEO
TELEVISION	RG11 / RG6	BLACK	VIDEO
CAMERAS	NA	NA	FUTURE
CAMERAS	NA	NA	FUTURE
FIBER BACKBONE MULTI-MODE	50μc/12S	ORANGE	VOICE / DATA SURVEILLANCE
COPPER BACKBONE (25 PAIR COUNT)	CAT 7	BROWN	VOICE / DATA
WIRELESS ACCESS	CAT 7	PURPLE	VIDEO

DIGALERT
DIAL TOLL FREE 1-800-422-4133
AT LEAST TWO DAYS BEFORE YOU DIG
UNDERGROUND SERVICE ALERT OF SOUTHERN CALIFORNIA

BASIS OF BEARINGS:

BEARINGS SHOWN HEREON ARE BASED ON THE CENTERLINE OF 162 ND STREET (FORMERLY MARKET STREET) BEING N 89° 55' 30" E SHOWN ON TRACT NO. 10901, M.B. 254/31-32

BENCHMARK:

THE CITY OF GARDENA BENCHMARK NO. 5D-15 ELEV. = 43.508

CITY OF GARDENA · FREEWAY CITY · INCORPORATED 1930

CONSULTANT:

FBA Engineering
Consulting Electrical Engineers
150 Paularino Avenue Suite A120
Costa Mesa, CA 92626
949.852.9995 • 949.852.1657 (fax)
fbaengr.com
FBA Job Number: 535050

REGISTERED PROFESSIONAL ENGINEER · STEPHEN R. ... · No. E 10372 · Exp. 09-30-24 · ELECTRICAL · STATE OF CALIFORNIA

05/01/2023

PREPARED UNDER THE SUPERVISION OF:

RJM DESIGN GROUP
31591 Camino Capistrano
San Juan Capistrano, CA 92675
www.RJMdesigngroup.com
[949] 493-2690 fax
[949] 493-2600 phone

LICENSED LANDSCAPE ARCHITECT · LARRY P. RYAN · LICENSE NO. 2502 · Signature · 09/30/2023 Renewal Date · 9/26/2023 Date · STATE OF CALIFORNIA

REVISIONS

NO.	DESCRIPTION	DATE	APPROVED
1	90% CD SUBMITTAL	12/15/2022	
2	100% CD SUBMITTAL	05/01/2023	
3	FINAL SUBMITTAL	10/02/2023	

CITY OF GARDENA
DEPARTMENT OF PUBLIC WORKS - ENGINEERING

SYMBOLS LIST, GENERAL NOTES, & SCHEDULES

COMMUNITY AQUATICS & SENIOR CENTER

SEC-0.01

	INITAL	DATE
DESIGNED BY	SR	11/14/2022
DRAWN BY	SR	09/26/2023
CHECKED BY	BZ	09/28/2023

APPROVED BY:
DATE DIRECTOR OF PUBLIC WORKS

SHT. 184 OF 195 DWG. NO. 5-2606

FILE PATH: I:\535\050\SEC001.DWG
PLOT TIME: 9/26/2023 11:12:01 AM

ACCESS CONTROL SYSTEM GENERAL NOTES

1.1 GENERAL

1. **SECURITY CONTRACTOR SHALL PROVIDE, PROGRAM, AND INSTALL A FULLY FUNCTIONAL, COMPLETE AND OPERATIONAL ACCESS CONTROL SYSTEM. PROVIDE ALL ENGINEERING, DESIGN, TESTING, EQUIPMENT, MATERIALS, COMPONENTS AND INSTALLATION NECESSARY AS PART OF THIS WORK.**

2. **ACCESS CONTROL SYSTEM, AT A MINIMUM, SHALL INCLUDE A DIGITAL ALARM COMMUNICATOR, BUILT-IN TELEPHONE LINE MONITOR, MEMORY LOGGER (500 EVENT MINIMUM), REAL TIME CLOCK, CALENDAR, TEST TIMER, BATTERY CHARGING/VOLTAGE SUPERVISION CIRCUITRY, BATTERY LEAD SUPERVISION, DIAGNOSTICS, TIME/EVENT BASED SCHEDULING AND ALL MODULES AND COMPONENTS FOR A COMPLETE AND OPERABLE SYSTEM.**

3. **SYSTEM SHALL:**

   A. **BE SCALABLE TO SUPPORT INDEPENDENT DEVICE ZONES (SINGLE DEVICE OR GROUP OF DEVICES GROUPED TOGETHER), EACH WITH INTERIOR AND PERIMETER PARTITIONING. QUANTITY OF ZONES AND DEVICES DEPENDENT ON PROJECT AND TO BE COORDINATED WITH OWNER.**

   B. **PROVIDE IDENTIFICATION, ANNUNCIATION AND COMMUNICATION OF ALL DEVICES ON A POINT-BY-POINT BASIS, INCLUDING EACH ACCESS CONTROL BY USER NUMBER.**

   C. **BE CAPABLE OF LOCALLY OR REMOTE PROGRAMMING.**

   D. **BE PROVIDED WITH SECONDARY POWER BACK-UP**

      1) **VIA BATTERIES. BATTERIES TO BE SIZED FOR MINIMUM 60-HOUR SUPERVISION AND 15-MINUTES OF ALARM. BATTERY CHARGER TO BE SIZED BASED ON BATTERY CAPACITIES.**
      2) **VIA EMERGENCY GENERATOR OR BUILDING BATTERY INVERTER.**

   E. **ALLOW REAL-TIME STATUS MONITORING/VIEWING OF DEVICES AND UNIT AND AREA EVENTS (AC FAIL, BATTERY FAIL, UNIT CONNECTED/LOST, AREA ARM/DISARM, INPUT TROUBLE, ETC.)**

4. **ALL FIELD DEVICES SHALL BE INDIVIDUALLY HOMERUN TO ACCP OR ACTC. DAISY CHAINING OF DEVICES IS NOT ACCEPTABLE UNLESS WRITTEN APPROVAL IS PROVIDED PRIOR TO SYSTEM SHOP DRAWINGS AND INSTALLATION OF ANY DEVICES.**

1.2 ACCESS CONTROL SYSTEM BASIS OF DESIGN

1. **THE INTENT AND PURPOSE OF THE ACCESS CONTROL SYSTEM IS TO PROVIDE ACCESS TO SECURED AREAS OF THE BUILDING AS INDICATED ON PLANS AND DEFINED BY THE OWNER, THROUGH THE ACCESS CONTROL SYSTEM. THE SYSTEM WILL ENABLE THE OWNER TO CONTROL ACCESS FOR DOORS AND/OR AREAS THROUGH THE PROGRAMMING OF THE RESTRICTED DATABASE ON SYSTEM SOFTWARE, AND TO PROVIDE THE CAPABILITY OF REMOTE ACCESS DATABASE MANAGEMENT. GRAPHICAL AND CONTROL INTEGRATION SOFTWARE SHALL BE PROVIDED FOR REMOTE ACCESS AND MANAGEMENT, INCLUDING REQUIRED SERVER COMPUTER AND DISPLAY.**

2. **THE ACCESS CONTROL SYSTEM SHALL INTEGRATE WITH THE INTRUSION DETECTION SYSTEM AND FUTURE CCTV SYSTEM. INTEGRATION WITH THE INTRUSION DETECTION SYSTEM SHALL PROVIDE A MOMENTARY CONTACT CLOSURE SIGNAL FOR THE PROGRAMMED DISARMING OF THE INTRUSION DETECTION ZONES AS MAY BE REQUIRED.**

3. **ACCESS TO SECURED AREAS SHALL BE PROVIDED THROUGH THE INSTALLATION OF DEDICATED AND SPECIFIC DEVICES, CONSISTING OF, BUT NOT LIMITED TO, PROXIMITY CARD READERS (WITH PROXIMITY CARDS), MAGNETIC DOOR CONTACTS, ELECTRIFIED HINGES, MORTISED LOCKS, ELECTRIFIED DOOR STRIKES, PANIC BARS, POWER SUPPLIES, REQUEST TO EXIT DEVICES, ETC. ALL DOOR HARDWARE REQUIREMENTS TO BE PART OF AND COORDINATED WITH PROJECT DOOR SCHEDULES AND DOOR INSTALLING CONTRACTOR.**

4. **ACCESS TO INDIVIDUAL UNITS SHALL BE CENTRALLY MANAGED THROUGH WIRELESS SMART CONTROL LOCKSETS AND CEILING MOUNTED GATEWAYS, THROUGHOUT PROPERTY BUILDINGS.**

5. **THE INTENT OF THE PLAN DRAWINGS IS TO GUIDE THE SECURITY CONTRACTOR IN THE BASIC INTENT OF THE SYSTEM DESIGN AND SHALL NOT BE CONSIDERED A FINAL OR COMPLETE SET OF PLANS. THE SECURITY CONTRACTOR SHALL INCLUDE AS PART OF HIS BID, AND SUBSEQUENT INSTALLATION, ALL REQUIRED MATERIALS AND LABOR, INCLUDING BUT NOT LIMITED TO ALL DEVICES, CABLING, CONNECTIONS, PATHWAYS, FIRESTOPPING, HARDWARE, SOFTWARE, UPS/BATTERY BACKUP, INTERFACES, WARRANTIES, ETC. FOR A COMPLETE AND OPERABLE SYSTEM.**

6. **THE FOLLOWING SHALL BE UTILIZED AS AN ACCESS CONTROL SYSTEM EQUIPMENT BASIS OF DESIGN. THE LIST DOES NOT CONSTITUTE COMPLETE PARTS OR MATERIALS, BUT A GUIDE OF EQUIPMENT FROM OWNER'S ACCESS CONTROL STANDARDS OF ACCEPTABLE MANUFACTURER FOR COMPONENTS. CONTRACTOR SHALL AUGMENT AND PROVIDE ALL COMPONENTS NECESSARY FOR A COMPLETE AND OPERABLE SYSTEM. THE FOLLOWING LIST OF ITEMS ARE IDENTIFIED FROM RS2 TECHNOLOGIES, AND ALLEGION, UNLESS OTHERWISE NOTED:**

   A. **RS2 TECHNOLOGIES SYSTEM CONTROLLER WITH ENTERPRISE-WIDE "ACCESS IT!" SOFTWARE AND WEB LICENSE "ACCESS IT!" UNIVERSAL BROWSER INTERFACE**

      PROXIMITY CARD - HID PROX 13.56mHz CARD OR 125kHz CARD (CONFIRM FREQUENCY WITH OWNER'S IT)
      PROXIMITY READER - HID MULTICLASS SE READER (13.56mHz AND 125kHz). HID RP10, RP15, RP40. PROVIDE WITH OPTIONAL IP65GSKT GASKET FOR EXTERIOR DEVICE LOCATIONS.
      ACCESS KEYPAD - HID RPK40
      ALTRONIX AL600 SERIES POWER SUPPLIES
      APC SMART UPS FOR SYSTEM BACK UP (4-HOURS MINIMUM)
      VON DUPRIN PANIC HARDWARE WITH ELECTRIFIED TRIM - SERIES #99 OR #33
      MAGNETIC DOOR CONTACTS - SENTROL 1078CT

      T-REX REQUEST TO EXIT MOTION DETECTORS - BOSCH DS160
      ACCESS CONTROL COMPOSITE CABLE:
      1) **ONE (1) 14-2C - LOCK POWER**
      2) **ONE (1) 18-2C AND ONE (1) 18-4C - CARD READER**
      3) **ONE (1) 18-4C - DOOR SWITCH**
      4) **ONE (1) 18-4C - REX/PIR**

      ADDITIONAL ACCESS CONTROL CABLE - 18-2C AND 18-4C SHIELDED CMP CALE AS REQUIRED. ALLEGION DOOR SECURITY SYSTEM:

      1) **KASTLE SYSTEMS V6 PANEL & MANAGEMENT**
      2) **NETWORK POE SWITCHES: 12 PORT CISCO CATALYST 3560CX (WS-C3560CX-12PD-S), 24 PORT CISCO CATALYST 3650 (WS-C3650-24PD-S), 48 PORT CISCO CATALYST 3650 (WS-C3560CX-12PD-S)**
      3) **WIRELESS GATEWAY WITH CAT6 HOMERUN TO IDF/POE SWITCH**
      4) **NDE SERIES WIRELESS LOCKS**
      5) **SCHLAGE CONTROL SMART LOCKS**

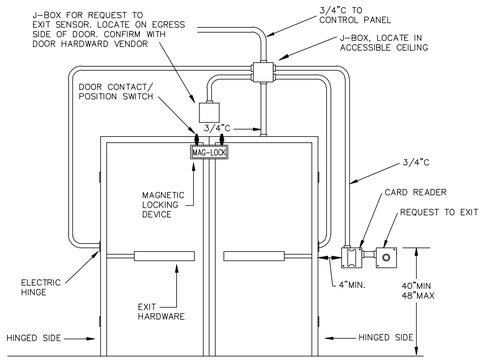

DOUBLE DOOR WITH READER

SCALE: NONE | 3

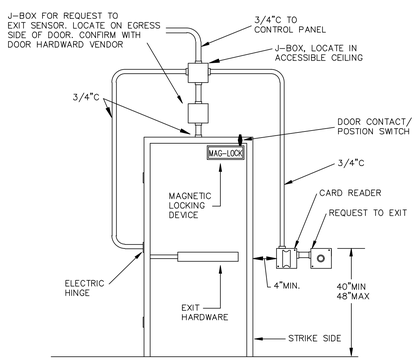

SINGLE DOOR WITH READER

SCALE: NONE | 2

KEY NOTES

1. ACCESS CONTROL SYSTEM CONTROL PANEL COMPLETE WITH KEYED LOCKABLE ENCLOSURE, DIGITAL ALARM COMMUNICATOR, 120 VOLT CONNECTION, POWER SUPPLY AND TRANSFORMER, SECONDARY BATTERIES (OR CONNECTION TO SUPPLEMENTAL EMERGENCY POWER) AND CHARGER, OWNERS MANUAL, WARRANTY CARD, AND ALL MODULES AND ACCESSORIES AS REQUIRED FOR A COMPLETE AND OPERABLE SYSTEM.
2. TELEPHONE SYSTEM BACKUP INTERFACE. PROVIDE 1" CONDUIT WITH TELEPHONE CABLE FROM CONTROL PANEL DIGITAL ALARM COMMUNICATOR TO TELEPHONE SYSTEM/BACKBOARD LOCATION. COORDINATE PHONE LINE REQUIREMENTS WITH OWNER.
3. PRIMARY ETHERNET SYSTEM INTERFACE CONNECTION WITH REQUIRED MODULES AND CABLING HOMERUN TO NEAREST BUILDING DATA CABINET/ENCLOSURE. COORDINATE WITH OWNER FOR ALL REQUIRED CABLING STANDARDS IN PLACE.
4. ACCESS CONTROL SYSTEM TOUCH SCREEN TYPE KEYPAD. PROVIDE MANUFACTURER'S RECOMMENDED BACKBOX AND 3/4" CONDUIT HOMERUN WITH CABLE PER MANUFACTURERS RECOMMENDATIONS TO ACCESS CONTROL SYSTEM PANEL.
5. REQUEST TO EXIT BUTTON. PUSH BUTTON SHALL SIGNAL THROUGH ACCESS CONTROL PANEL NORMALLY OCCUPIED SPACE FOR MANUAL OPERATION OF DOOR ACCESS. SURFACE MOUNT OVER FLUSH BACKBOX LOCATED WITHIN 6" OF DOOR EDGE ON LATCH SIDE ADJACENT TO WALL SWITCHES UNLESS OTHERWISE NOTED. SEE DOOR DETAILS FOR ADDITIONAL INFORMATION. PROVIDE J-BOX ABOVE DOOR JAMB/HEADER AND 3/4" CONDUIT WITH HOMERUN CABLE PER MANUFACTURER'S RECOMMENDATION TO ACCESS CONTROL PANEL.
6. ACCESS CONTROL TERMINAL CABINET COMPLETE WITH LOCKABLE ENCLOSURE (KEYED TO MATCH CONTROL PANEL), 120 VOLT POWER SUPPLY AND TRANSFORMER, SECONDARY BATTERIES (OR CONNECTION TO SUPPLEMENTAL EMERGENCY POWER) AND ALL MODULES TERMINAL BLOCKS AND ACCESSORIES FOR A COMPLETE AND OPERABLE SYSTEM.
7. ACCESS CONTROL SYSTEM CARD READER. CARD READER SHALL BE UNIVERSAL TYPE WITH HID OR TOKEN CARDS PER OWNER'S SELECTION. SURFACE MOUNT OVER FLUSH BACKBOX LOCATED WITHIN 6" OF DOOR EDGE ON LATCH SIDE ADJACENT TO WALL SWITCHES UNLESS OTHERWISE NOTED. SEE DOOR DETAILS FOR ADDITIONAL INFORMATION. PROVIDE J-BOX ABOVE DOOR JAMB / HEADER AND 3/4" CONDUIT WITH HOMERUN CABLE PER MANUFACTURER'S RECOMMENDATION TO ACCESS CONTROL PANEL.
8. ACCESS CONTROL SYSTEM PROXIMITY READER. READER SHALL BE UNIVERSAL TYPE WITH HID OR TOKEN CARDS PER OWNER 'S SELECTION. SURFACE MOUNT OVER FLUSH BACKBOX LOCATED WITHIN 6" OF DOOR EDGE ON LATCH SIDE ADJACENT TO WALL SWITCHES UNLESS OTHERWISE NOTED. SEE DOOR DETAILS FOR ADDITIONAL INFORMATION. PROVIDE J-BOX ABOVE DOOR JAMB/HEADER AND 3/4" CONDUIT WITH HOMERUN CABLE PER MANUFACTURER'S RECOMMENDATION TO ACCESS CONTROL PANEL.
9. ELECTRIFIED DOOR HARDWARE. PROVIDE CONDUIT AND CABLING/CONDUCTORS TO DOOR HARDWARE INCLUDING CONNECTIONS TO ALL ELECTRIFIED EQUIPMENT AS IDENTIFIED ON PLAN AND COORDINATED WITH ARCHITECTURAL DOOR SCHEDULES. COORDINATE ROUTING OF CONDUIT AND CABLIN/CONDUCTORS FOR CONNECTIONS WITH DOOR INSTALLER CONTRACTOR PRIOR TO INSTALLATION. SEE DOOR DETAILS FOR ADDITIONAL INFORMATION. PROVIDE J-BOX ABOVE DOOR JAMB / HEADER AND 3/4" CONDUIT WITH HOMERUN CABLE PER MANUFACTURER'S RECOMMENDATION TO ACCESS CONTROL PANEL.
10. ACCESS CONTROL SYSTEM MAGNETIC DOOR HOLD. PROVIDE CONDUIT AND CONDUCTORS TO DOOR HOLD DEVICES, INCLUDING CONNECTIONS TO EQUIPMENT AS IDENTIFIED ON PLAN AND COORDINATED WITH ARCHITECTURAL DOOR SCHEDULES. COORDINATE ROUTING OF CONDUIT AND CONDUCTORS FOR CONNECTIONS WITH DOOR INSTALLER CONTRACTOR PRIOR TO INSTALLATION. SEE DOOR DETAILS FOR ADDITIONAL INFORMATION. PROVIDE J-BOX ABOVE DOOR JAMB / HEADER AND 3/4" CONDUIT WITH HOMERUN CABLE PER MANUFACTURER'S RECOMMENDATION TO ACCESS CONTROL PANLEL.
11. ACCESS CONTROL SYSTEM DOOR CONTACT/POSITION SWITCH. CONTACTS TO BE FLUSH MOUNTED IN NEW DOOR FRAMES / CONSTRUCTION LOCATED WITHIN 6" OF DOOR EDGE ON LATCH SIDE. SEE DOOR DETAILS FOR ADDITIONAL INFORMATION. PROVIDE J-BOX ABOVE DOOR JAMB/HEADER AND 3/4" CONDUIT WITH HOMERUN CABLE PER MANUFACTURER'S RECOMMENDATION TO ACCESS CONTROL PANEL.
12. PROVIDE 2" CONDUIT RISER WITH SYSTEM CONDUCTORS PER MANUFACTURER'S RECOMMENDATIONS FROM ACCESS CONTROL PANEL TO ACCESS CONTROL CABINETS ON FLOORS ABOVE.
13. UNDERGROUND ACCESS CONTROL SYSTEM CONDUIT AND SYSTEM CONDUCTORS PER MANUFACTURER'S RECOMMENDATIONS FROM ACCESS CONTROL PANEL LOCATION TO OTHER SITE BUILDING STRUCTURES. CONDUIT SIZE, ROUTING PER SITE PLAN DRAWINGS. CABLING TO BE PROVIDED IN A "STAR TOPOLOGY" CONFIGURATION. ROUTING OF SYSTEM CONDUCTORS' DAISY CHAINED THROUGH BUILDINGS IS NOT ACCEPTABLE.
14. PROVIDE CONDUIT SLEEVES BETWEEN FLOORS FOR ACCESS CONTROL SYSTEM CONDUCTOR PATHWAYS. WHERE FLOOR IS RATED, PROVIDE FIRESTOP SYSTEM ASSEMBLY WITH RATING EQUAL TO OR GREATER THAN PENETRATED STRUCTURE FOR A UL LISTED PENETRATION SYSTEM. (STI EZ-PATH OR APPROVED EQUAL).
15. FLUSH CEILING OR WALL MOUNTED ACCESS CONTROL SYSTEM AUDIBLE SOUNDER. PROVIDE 3/4" CONDUIT WITH HOMERUN CABLE PER MANUFACTURER'S RECOMMENDATION TO ACCESS CONTROL PANEL.
16. CONDUIT PROVIDED BY ELECTRICAL CONTRACTOR, REFER TO NOTE #8 ON E-3.01 FOR SIZES AND QUANTITIES.
17. TYPICAL PULLBOX, IF REQUIRED. PROVIDE SERVICE LOOP IN ALL CABLES.
18. CONDUIT PROVIDED BY ELECTRICAL CONTRACTOR, REFER TO NOTE #5 ON E-1.01 FOR SIZES AND QUANTITIES.

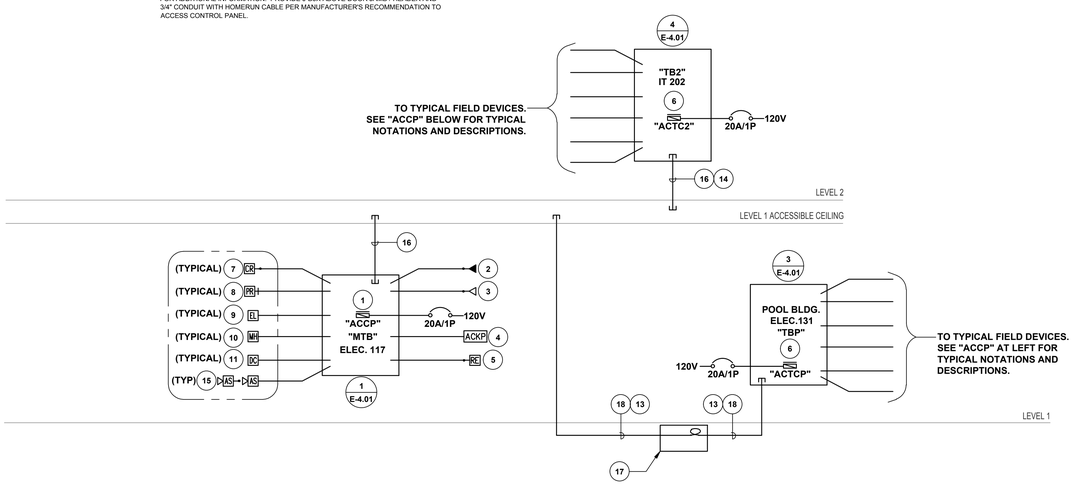

ACCESS CONTROL RISER DIAGRAM

SCALE: NONE | 1

DIGALERT
DIAL TOLL FREE 1-800-422-4133
AT LEAST TWO DAYS BEFORE YOU DIG
UNDERGROUND SERVICE ALERT OF SOUTHERN CALIFORNIA

BASIS OF BEARINGS:

BEARINGS SHOWN HEREON ARE BASED ON THE CENTERLINE OF 162 ND STREET (FORMERLY MARKET STREET) BEING N 89° 55' 30" E SHOWN ON TRACT NO. 10901, M.B. 254/31-32

BENCHMARK:

THE CITY OF GARDENA BENCHMARK NO. 5D-15 ELEV. = 43.508

CONSULTANT:

FBA Engineering
Consulting Electrical Engineers
150 Pasarino Avenue Suite A120
Costa Mesa, CA 92626
949.852.9995 • 949.852.1657 (fax)
fbaengr.com
FBA Job Number: 535050

REGISTERED PROFESSIONAL ENGINEER 10372 09-30-24 ELECTRICIAN STATE OF CALIFORNIA

05/01/2023

PREPARED UNDER THE SUPERVISION OF:

RJM DESIGN GROUP
31591 Camino Capistrano
San Juan Capistrano, CA 92675
www.RJMdesigngroup.com
[949] 493-2650 fax
[949] 493-2600 phone

LICENSED LANDSCAPE ARCHITECT — Signature 04/30/2023 Renewal Date 4/30/2023 — STATE OF CALIFORNIA

REVISIONS			
NO.	DESCRIPTION	DATE	APPROVED
1	90% CD SUBMITTAL	12/16/2022	
2	100% CD SUBMITTAL	05/01/2023	
3	FINAL SUBMITTAL	10/02/2023	

CITY OF GARDENA
DEPARTMENT OF PUBLIC WORKS - ENGINEERING

ACCESS CONTROL NOTES, RISER DIAGRAM & DETAILS

COMMUNITY AQUATICS & SENIOR CENTER

SEC-0.02

	INITAL	DATE
DESIGNED BY	SR	11/14/2022
DRAWN BY	SR	09/26/2023
CHECKED BY	BZ	09/28/2023

APPROVED BY:

DATE

DIRECTOR OF PUBLIC WORKS

SHT. 185 OF 195 DWG. NO. 5-2606

FBA Engineering / Plot Date: 9/26/2023 11:12 AM / Plotted by: Steve Roth / Drawing Location: I:\535\050\SEC002.dwg

REF.FILES: I:\535\050\SEC002.DWG
PLOT TIME: 9/26/2023 11:12:03 AM

INTRUSION DETECTION SYSTEM GENERAL NOTES

1.1 GENERAL

1. SECURITY CONTRACTOR SHALL PROVIDE, PROGRAM AND INSTALL A FULLY FUNCTIONAL, COMPLETE AND OPERATIONAL INTRUSION DETECTION SYSTEM. PROVIDE ALL ENGINEERING, DESIGN, TESTING, EQUIPMENT, MATERIALS, COMPONENTS AND INSTALLATION NECESSARY AS PART OF THIS WORK.

2. INTRUSION DETECTION SYSTEM, AT A MINIMUM, SHALL INCLUDE A DIGITAL ALARM COMMUNICATOR, BUILT-IN TELEPHONE LINE MONITOR, MEMORY LOGGER (500 EVENT MINIMUM), REAL TIME CLOCK, CALENDAR, TEST TIMER, BATTERY CHARGING/VOLTAGE SUPERVISION CIRCUITRY, BATTERY LEAD SUPERVISION, DIAGNOSTICS, TIME/EVENT BASED SCHEDULING AND ALL MODULES AND COMPONENTS FOR A COMPLETE AND OPERABLE SYSTEM.

3. SYSTEM SHALL:

   A. BE SCALABLE TO SUPPORT INDEPENDENT DEVICE ZONES (SINGLE DEVICE OR GROUP OF DEVICES GROUPED TOGETHER), EACH WITH INTERIOR AND PERIMETER PARTITIONING. QUANTITY OF ZONES DEPENDENT ON PROJECT AND TO BE COORDINATED WITH OWNER.

   B. PROVIDE IDENTIFICATION, ANNUNCIATION AND COMMUNICATION OF ALARMED DETECTORS ON A POINT-BY-POINT BASIS, INCLUDING EACH ACCESS CONTROL BY USER NUMBER.

   C. BE CAPABLE OF LOCALLY OR REMOTE PROGRAMMING. BE CAPABLE OF LOCALLY OR REMOTE PROGRAMMING.

   D. BE PROVIDED WITH SECONDARY POWER BACK-UP:

      1) VIA BATTERIES. BATTERIES TO BE SIZED FOR MINIMUM 60-HOUR SUPERVISION AND 15-MINUTES OF ALARM. BATTERY CHARGER TO BE SIZED BASED ON BATTERY CAPACITIES.

   E. ALLOW REAL-TIME STATUS MONITORING/VIEWING OF DEVICES AND UNIT AND AREA EVENTS (AC FAIL, BATTERY FAIL, UNIT CONNECTED/LOST, AREA ARM/DISARM, INPUT TROUBLE, ETC.)

4. ALL FIELD DEVICES SHALL BE INDIVIDUALLY HOMERUN TO IDCP OR IDTC. DAISY CHAINING OF DEVICES IS NOT ACCEPTABLE UNLESS WRITTEN APPROVAL IS PROVIDED PRIOR TO SYSTEM SHOP DRAWINGS AND INSTALLATION OF ANY DEVICES.

1.2 INTRUSION DETECTION AND ALARM SYSTEM BASIS OF DESIGN

1. THE INTENT AND PURPOSE OF THE INTRUSION DETECTION AND ALARM SYSTEM IS TO PROVIDE SECURITY/INTRUSION DETECTION TO THE AREAS INDICATED ON PLAN, BY THE INSTALLATION OF DEDICATED AND SPECIFIC DEVICES TO COVER SUCH AREAS. PERIMETER DOORS, ROOF HATCHES, OR OTHER POTENTIAL ENTRY POINTS SHALL BE EQUIPPED WITH DEDICATED, CONCEALED MAGNETIC CONTACT SWITCHES AND INTERIOR AREA PROTECTION SHALL BE PROVIDED VIA A COMBINATION OF PASSIVE INFRARED / MICROWAVE TYPE, WALL OR CEILING MOUNTED DETECTORS, AND/OR GLASS BREAK SENSORS AS LOCATED PER PLANS. THE ARMING AND DISARMING OR THE INTRUSION DETECTION AND ALARM SYSTEM SHALL BE ACHIEVED LOCALLY WITH A DEDICATED KEYPAD OR REMOTELY ACCESSED VIA WEB/ETHERNET CONNECTION FROM A REMOTE LOCATION.

2. THE INTENT OF THE SECURITY PLAN DRAWINGS IS TO GUIDE THE SECURITY CONTRACTOR IN THE BASIC INTENT OF THE SYSTEM DESIGN AND SHALL NOT BE CONSIDERED A FINAL A COMPLETE SET OF PLANS. THE SECURITY CONTRACTOR SHALL INCLUDE AS PART OF HIS BID, AND SUBSEQUENT INSTALLATION, ALL REQUIRED MATERIALS AND LABOR, INCLUDING BUT NOT LIMITED TO ALL DEVICES, CABLING, CONNECTIONS, PATHWAYS, FIRESTOPPING, HARDWARE, SOFTWARE, UPS/BATTERY BACKUP, INTERFACES, WARRANTIES, ETC. FOR A COMPLETE AND OPERABLE SYSTEM.

3. THE FOLLOWING SHALL BE UTILIZED AS AN INTRUSION DETECTION AND ALARM SYSTEM EQUIPMENT BASIS OF DESIGN. THE LIST DOES NOT CONSTITUTE COMPLETE PARTS OR MATERIALS, BUT A GUIDE OF EQUIPMENT FROM AN ACCEPTABLE MANUFACTURER FOR COMPONENTS. CONTRACTOR SHALL AUGMENT AND PROVIDE ALL COMPONENTS NECESSARY FOR A COMPLETE AND OPERABLE SYSTEM. THE FOLLOWING LIST OF ITEMS ARE IDENTIFIED FROM BOSCH SECURITY SYSTEMS UNLESS OTHERWISE NOTED:

   A. ALARM PANEL - BOSCH D9412 GV4
   B. DIGITAL KEYPAD - BOSCH D1260
   C. PASSIVE INFRARED/MICROWAVE DETECTORS
      BOSCH DS970 (LONG RANGE, SURFACE MTD.)
      BOSCH DS950 (MEDIUM RANGE, SURFACE MTD.)
      BOSCH DS9360 (360 DEGREE, SURFACE MTD.)
      HONEYWELL 995 (LONG/WIDE RANGE, FLUSH MTD.)
      HONEYWELL IS-280CM (360 DEGREE, FLUSH/SURFACE MTD.)
      HONEYWELL DT6360STC (360 DEGREE, HIGH CEILING OF 8 FEET TO 16 FEET)
   D. GLASS BREAK SENSOR - HONEYWELL FG1625F
   E. SIREN/SPEAKER - SENTROL MPI36
   F. MAGNETIC DOOR CONTACTS
      SENTROL 1078CT (FLUSH)
      SENTROL 1042TW (SURFACE)
      SENTROL 2505 (SURFACE, EXPOSED WIRE)
      SENTROL 2707A (HEAVY DUTY)
      GE 2202 (OVERHEAD DOOR)
   G. OCTOPOPIT 8-ZONE EXPANDER - D8128D
   H. OCTORELAY - D8129
   I. POWER SUPPLY - ALTRONIX AL300ULX
   J. ALARM CABLE - PLENUM RATED (UON), STRANDED, PVC, 18GA MIN, 2PR TWISTED

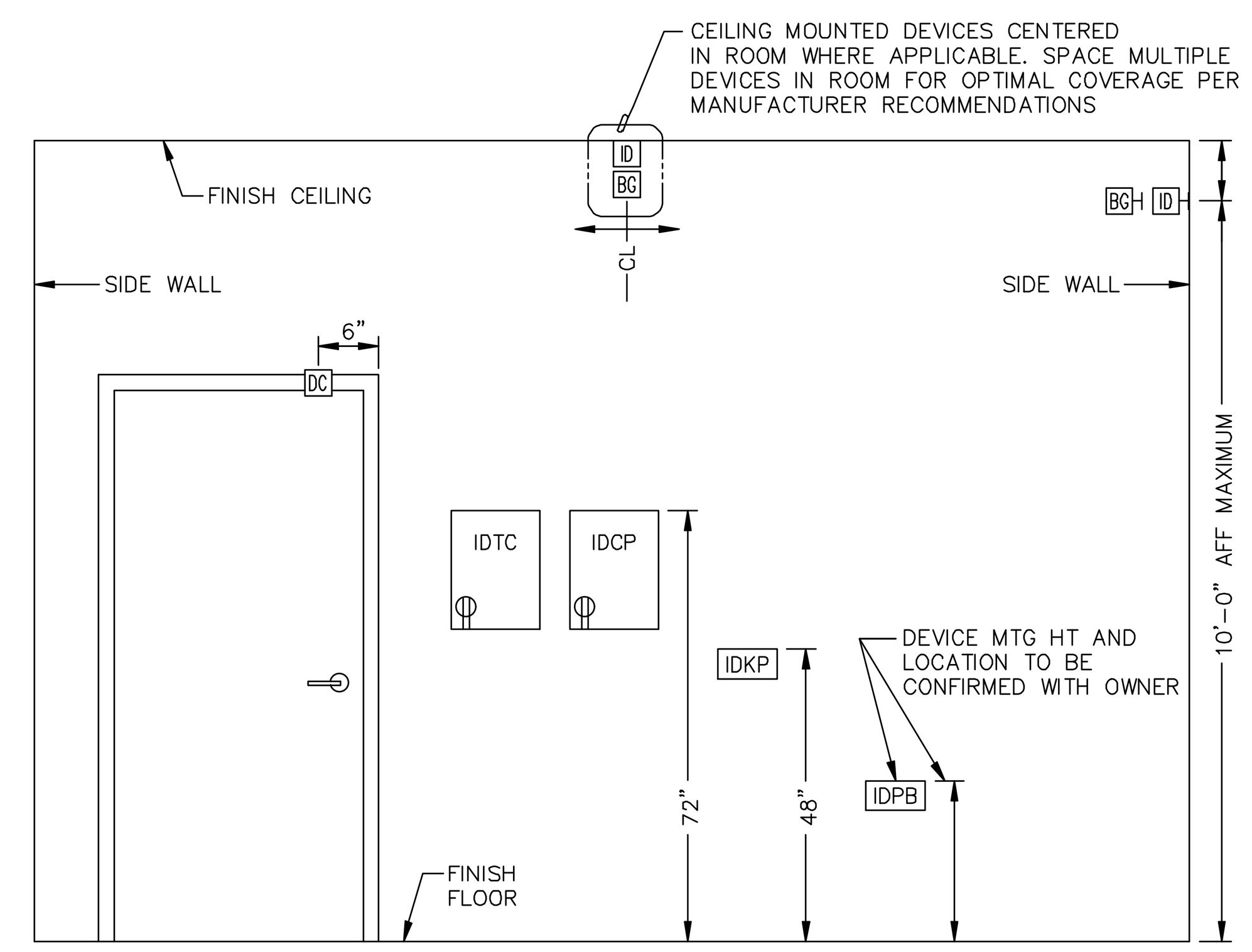

TYPICAL DEVICE MOUNTING DETAIL

SCALE: NONE — 2

KEY NOTES

1. INTRUSION DETECTION SYSTEM CONTROL PANEL COMPLETE WITH KEYED LOCKABLE ENCLOSURE, DIGITAL ALARM COMMUNICATOR, 120 VOLT CONNECTION, POWER SUPPLY AND TRANSFORMER, SECONDARY BATTERIES (OR CONNECTION TO SUPPLEMENTAL EMERGENCY POWER) AND CHARGER, OWNER'S MANUAL, WARRANTY CARD, AND ALL MODULES AND ACCESSORIES AS REQUIRED FOR A COMPLETE AND OPERABLE SYSTEM.
2. TELEPHONE SYSTEM BACKUP INTERFACE. PROVIDE 1"CONDUIT WITH TELEPHONE CABLE FROM CONTROL PANEL DIGITAL ALARM COMMUNICATOR TO TELEPHONE SYSTEM/BACKBOARD LOCATION. COORDINATE PHONE LINE REQUIREMENTS WITH OWNER.
3. PRIMARY ETHERNET SYSTEM INTERFACE CONNECTION WITH REQUIRED MODULES AND CABLING HOMERUN TO NEAREST BUILDING DATA CABINET/ENCLOSURE. COORDINATE WITH OWNER FOR ALL REQUIRED CABLING STANDARDS IN PLACE.
4. INTRUSION DETECTION SYSTEM TOUCH SCREEN TYPE KEYPAD. PROVIDE MANUFACTURER'S RECOMMENDED BACKBOX AND 3/4" CONDUIT HOMERUN WITH CABLE PER MANUFACTURERS RECOMMENDATIONS TO IDCP (OR IDTC).
5. INTRUSION DETECTION SYSTEM PANIC BUTTON. EXACT LOCATIONS AND FINAL QUANTITIES AS COORDINATED WITH OWNER. PROVIDE BACKBOX TO MATCH DEVICE FACEPLATE AND 3/4"C HOMERUN WITH CABLE PER MANUFACTURER'S RECOMMENDATIONS TO IDCP (OR IDTC).
6. INTRUSION DETECTION TERMINAL CABINET COMPLETE WITH LOCKABLE ENCLOSURE (KEYED TO MATCH CONTROL PANEL), 120 VOLT POWER SUPPLY AND TRANSFORMER, SECONDARY BATTERIES (OR CONNECTION TO SUPPLEMENTAL EMERGENCY POWER) AND ALL MODULES TERMINAL BLOCKS AND ACCESSORIES FOR A COMPLETE AND OPERABLE SYSTEM.
7. INTRUSION DETECTION BREAK GLASS SENSOR (CEILING OR WALL MOUNTED PER PLAN) WITH SPECIFIC FREQUENCY MICROPROCESSOR BASED SOUND ANALYSIS TECHNOLOGY. EXACT MOUNTING LOCATIONS (RELATIVE TO ROOM CONSTRUCTION AND ACOUSTICS, MOUNTING HEIGHTS, QUANTITY OF DEVICES PER SPACE, WINDOW SIZE COVERAGE, ETC.) SHALL BE PER MANUFACTURER'S RECOMMENDATIONS. PROVIDE MANUFACTURER'S RECOMMENDED BACKBOX WITH 3/4" CONDUIT HOMERUN WITH CABLE PER MANUFACTURER'S RECOMMENDATIONS TO IDCP (OR IDTC).
8. INTRUSION DETECTION MOTION SENSOR, CEILING MOUNTED, PANORAMIC 360 DEGREE COVERAGE, MULTI-TECHNOLOGY TYPE (PIR & MICROWAVE TYPE) WITH SELF TEST SUPERVISION. DETECTORS, QUANTITIES AND LOCATIONS SHALL BE LISTED FOR ENVIRONMENT AND MOUNTING HEIGHTS FOR WHICH THEY ARE BEING INSTALLED. PROVIDE MANUFACTURER'S RECOMMENDED BACKBOX WITH 3/4" CONDUIT HOMERUN WITH CABLE PER MANUFACTURER'S RECOMMENDATION TO IDCP (OR IDTC).
9. INTRUSION DETECTION MOTION SENSOR, WALL MOUNTED, MULTI-TECHNOLOGY TYPE (PIR & MICROWAVE TYPE) WITH SELF TEST SUPERVISION. DETECTORS, QUANTITIES AND LOCATIONS SHALL BE LISTED FOR ENVIRONMENT AND MOUNTING HEIGHTS FOR WHICH THEY ARE BEING INSTALLED. PROVIDE MANUFACTURER'S RECOMMENDED BACKBOX WITH 3/4" CONDUIT HOMERUN WITH CABLE PER MANUFACTURER'S RECOMMENDATION TO IDCP (OR IDTC).
10. INTRUSION DETECTION SYSTEM DOOR CONTACT/POSITION SWITCH. CONTACTS TO BE FLUSH MOUNTED IN NEW DOOR FRAMES/CONSTRUCTION LOCATED WITHIN 6" OF DOOR EDGE ON LATCH SIDE. SEE DOOR DETAILS FOR ADDITIONAL INFORMATION. PROVIDE J-BOX ABOVE DOOR JAMB/HEADER AND 3/4" CONDUIT HOMERUN WITH CABLE PER MANUFACTURER'S RECOMMENDATION TO IDCP (OR IDTC).
11. CONDUIT PROVIDED BY ELECTRICAL CONTRACTOR, REFER TO NOTE #8 ON E-3.01 FOR SIZES AND QUANTITIES.
12. UNDERGROUND INTRUSION SYSTEM CONDUIT AND SYSTEM CONDUCTORS PER MANUFACTURER'S RECOMMENDATIONS FROM IDCP LOCATION TO OTHER SITE BUILDING STRUCTURES. CONDUIT SIZE, ROUTING AND PULL BOXES PER SITE PLAN DRAWINGS. SITE CONDUIT SYSTEM DISTRIBUTION AND IDTC TERMINAL CABINET CABLING TO BE PROVIDED IN A "STAR TOPOLOGY" CONFIGURATION. ROUTING OF SYSTEM CONDUCTORS' DAISY CHAINED THROUGH BUILDINGS IS NOT ACCEPTABLE.
13. PROVIDE CONDUIT SLEEVES BETWEEN FLOORS FOR ACCESS CONTROL SYSTEM CONDUCTOR PATHWAYS. WHERE FLOOR IS RATED, PROVIDE FIRESTOP SYSTEM ASSEMBLY WITH RATING EQUAL TO OR GREATER THAN PENETRATED STRUCTURE FOR A UL LISTED PENETRATION SYSTEM. (STI EZ-PATH OR APPROVED EQUAL).
14. TO OTHER INTEGRATED SECURITY SYSTEM HEAD END EQUIPMENT FOR ACCESS CONTROL AND/OR CCTV. CONTRACTOR SHALL PROVIDE ALL COMPONENTS NECESSARY FOR COMPLETE INTEGRATION, INCLUDING ALL PATHWAYS, CABLES, MODULES, HARDWARE, PROGRAMMING, ETC. FOR A COMPLETE AND OPERABLE SYSTEM.
15. CONDUIT PROVIDED BY ELECTRICAL CONTRACTOR, REFER TO NOTE #5 ON E-1.01 FOR SIZES AND QUANTITIES.
16. TYPICAL PULLBOX, IF REQUIRED. PROVIDE SERVICE LOOP IN ALL CABLES.

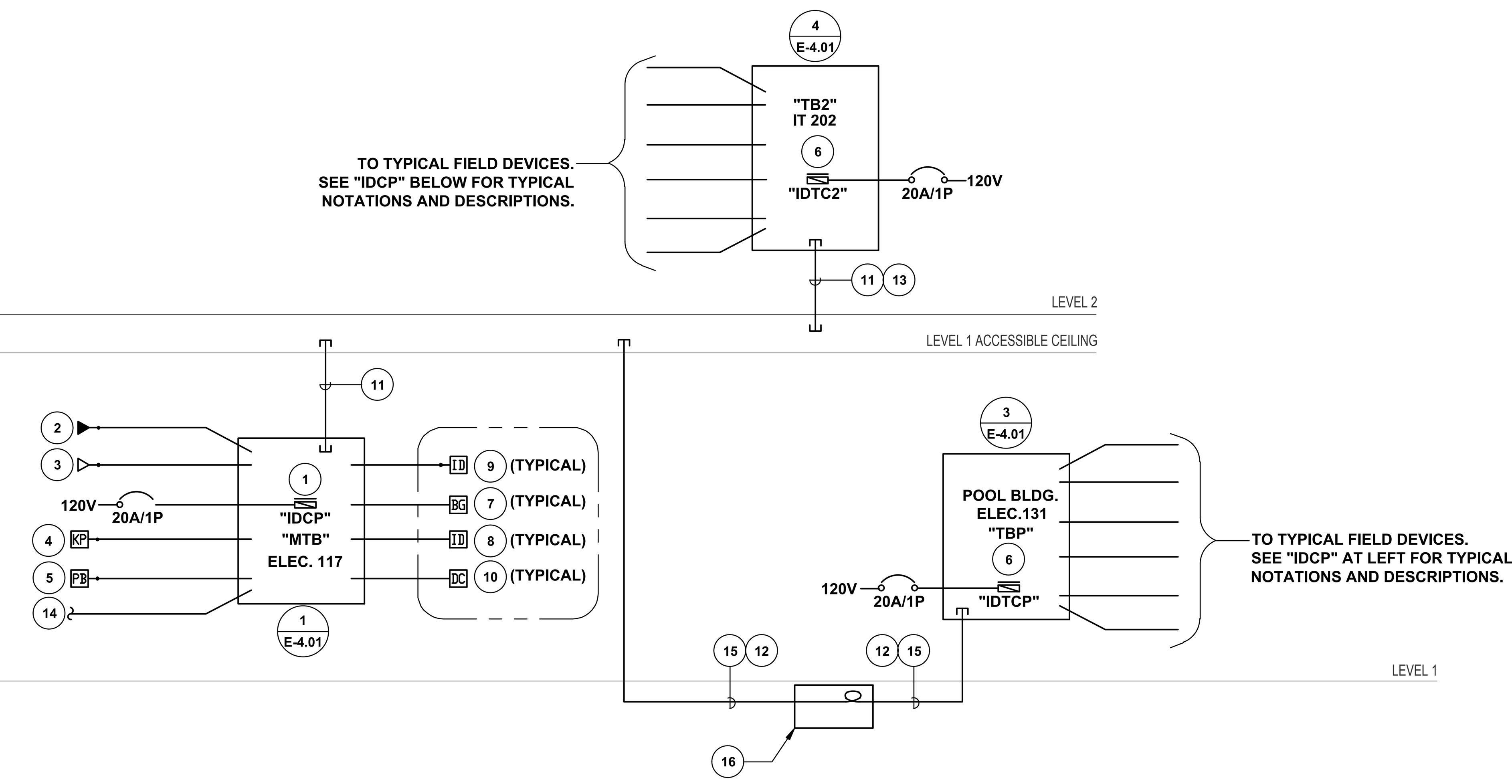

INTRUSION DETECTION RISER DIAGRAM

SCALE: NONE — 1

DIGALERT
DIAL TOLL FREE 1-800-422-4133
AT LEAST TWO DAYS BEFORE YOU DIG
UNDERGROUND SERVICE ALERT OF SOUTHERN CALIFORNIA

BASIS OF BEARINGS:

BEARINGS SHOWN HEREON ARE BASED ON THE CENTERLINE OF 162 ND STREET (FORMERLY MARKET STREET) BEING N 89° 55' 30" E SHOWN ON TRACT NO. 10901, M.B. 254/31-32

BENCHMARK:

THE CITY OF GARDENA BENCHMARK NO. 5D-15 ELEV. = 43.508

CITY OF GARDENA — FREEWAY CITY — INCORPORATED 1930

CONSULTANT:
FBA Engineering
Consulting Electrical Engineers
150 Paularino Avenue Suite A120
Costa Mesa, CA 92626
949.852.9995 • 949.852.1657 (fax)
fbaengr.com
FBA Job Number: 535050

REGISTERED PROFESSIONAL ENGINEER — STEPHEN R. RUCICEK — No. E 10372 — Exp. 09-30-24 — ELECTRICAL — STATE OF CALIFORNIA
05/01/2023

PREPARED UNDER THE SUPERVISION OF:
RJM DESIGN GROUP
31591 Camino Capistrano
San Juan Capistrano, CA 92675
www.RJMdesigngroup.com
[949] 493-2690 fax
[949] 493-2600 phone

LICENSED LANDSCAPE ARCHITECT — LARRY P. RYAN — LICENSE NO. 2502 — Signature — 09/30/2023 Renewal Date — 9/26/2023 Date — STATE OF CALIFORNIA

REVISIONS

NO.	DESCRIPTION	DATE	APPROVED
1	90% CD SUBMITTAL	12/15/2022	
2	100% CD SUBMITTAL	05/01/2023	
3	FINAL SUBMITTAL	10/02/2023	

CITY OF GARDENA
DEPARTMENT OF PUBLIC WORKS - ENGINEERING
INTRUSION DETECTION NOTES, RISER DIAGRAM & DETAILS
COMMUNITY AQUATICS & SENIOR CENTER
SEC-0.03

	INITAL	DATE
DESIGNED BY	SR	11/14/2022
DRAWN BY	SR	09/26/2023
CHECKED BY	BZ	09/28/2023

APPROVED BY:
DATE — DIRECTOR OF PUBLIC WORKS
SHT. 186 OF 195 — DWG. NO. 5-2606

FBA Engineering / Plot Date: 9/26/2023 11:12 AM / Plotted by: Steve Roth / Drawing Location: I:\535\050\SEC003.dwg

FILE PATH: I:\535\050\SEC003.DWG
PLOT TIME: 9/26/2023 11:12:06 AM

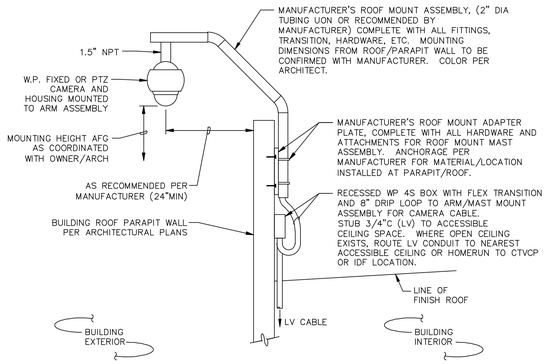

ROOF/PARAPET MOUNT CAMERA DETAIL

SCALE: NTS

5

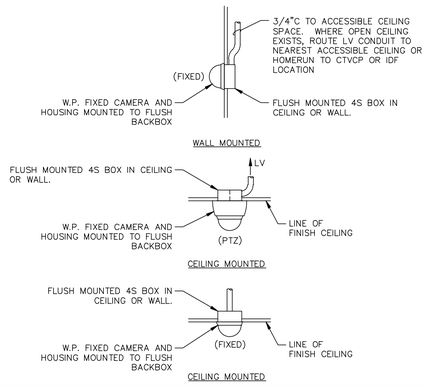

SURFACE MOUNT CAMERA DETAIL

SCALE: NTS

4

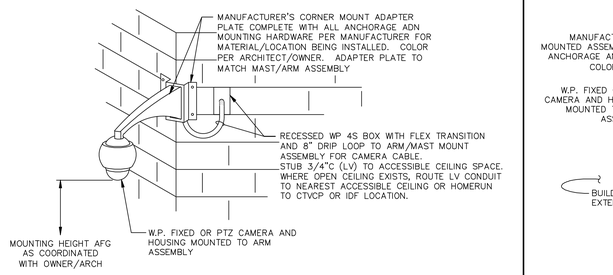

CORNER MOUNT CAMERA DETAIL

SCALE: NTS

3

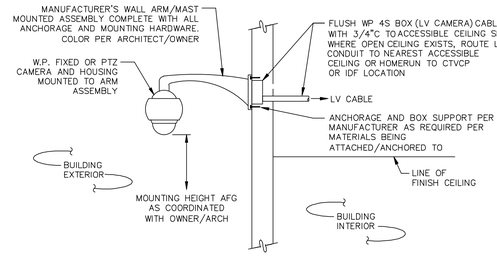

ARM/MAST MOUNT CAMERA DETAIL

SCALE: NTS

2

1.1 GENERAL NOTES

1. THE SCOPE OF CCTV (CAMERA) WORK SHALL CONSIST OF CONDUIT ONLY AND OUTLET BOXES FOR FUTURE CCTV SYSTEM CAMERAS.
2. ALL REFERENCES ON PLANS AND DETAILS TO PRODUCTS AND/OR MANUFACTURER IS FOR REFERENCE ONLY AND DOES NOT DEPICT EQUIPMENT TO BE PROVIDED UNDER THIS SCOPE OF WORK.

CCTV SYSTEM GENERAL NOTES

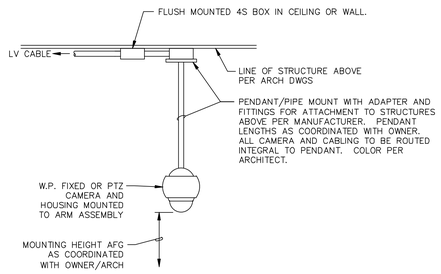

PENDANT/PIPE MOUNT CAMERA DETAIL

SCALE: NTS

6

KEY NOTES

1. FUTURE CLOSED CIRCUIT TELEVISION CONTROL PANEL (CTVCP) HEAD END EQUIPMENT LOCATION.
2. FUTURE CLOSED CIRCUIT TELEVISIONS POWER SUPPLY FOR CAMERA/COMPONENT EQUIPMENT.
3. FUTURE PRIMARY ETHERNET SYSTEM INTERFACE CONNECTION WITH REQUIRED MODULES.
4. FUTURE CLOSED CIRCUIT TELEVISION WORKSTATION LOCATION. PROVIDE FLUSH 4S JUNCTION BOX @+18" WITH BLANK COVER PLATE & 3/4" CONDUIT HOMERUN CONTROL PANEL (CTVCP) LOCATION. WORKSTATION LOCATION TO BE VERIFIED WITH OWNER.
5. FUTURE CLOSED CIRCUIT TELEVISION REMOTE MONITOR LOCATION. PROVIDE FLUSH 4S JUNCTION BOX @+18" WITH BLANK COVER PLATE & 3/4" CONDUIT HOMERUN CONTROL PANEL (CTVCP) LOCATION. REMOTE MONITOR LOCATION TO BE VERIFIED WITH OWNER.
6. CONDUIT PROVIDED BY ELECTRICAL CONTRACTOR, REFER TO NOTE #5 ON E-1.01 FOR SIZES AND QUANTITIES.
7. SURFACE MOUNTED (CEILING OR WALL); FUTURE CLOSED CIRCUIT TELEVISION DOME TYPE CAMERA. PROVIDE WITH FLUSH 4S BACKBOX AND 3/4" CONDUIT HOMERUN TO NEAREST CTVCP (OR TERMINAL CABINET). WALL MOUNTED LOCATIONS SHALL BE @+8'-0", OR AS DIRECTED BY ARCHITECT. "WP" INDICATES OUTDOOR MOUNTED CAMERA. PROVIDE WITH OUTDOOR RATED BACKBOX. PROVIDE BLANK COVER PLATE ON ALL BACKBOXES.
8. PROVIDE CONDUIT SLEEVES BETWEEN FLOORS FOR CCTV SYSTEM CONDUCTOR PATHWAYS. WHERE FLOOR IS RATED, PROVIDE FIRESTOP SYSTEM ASSEMBLY WITH RATING EQUAL TO OR GREATER THAN PENETRATED STRUCTURE FOR A UL LISTED PENETRATION SYSTEM. (STI EZ-PATH OR APPROVED EQUAL).
9. TYPICAL PULLBOX, IF REQUIRED. PROVIDE SERVICE LOOP IN ALL CABLES.
10. FOR FUTURE INTEGRATION WITH ACCESS CONTROL AND INTRUSION DETECTION SYSTEMS.
11. CONDUIT PROVIDED BY ELECTRICAL CONTRACTOR, REFER TO NOTE #8 ON E-3.01 FOR SIZES AND QUANTITIES.
12. UNDERGROUND CLOSED-CIRCUIT TELEVISION SYSTEM CONDUIT ONLY FROM CTVCP HEAD END LOCATION TO OTHER SITE BUILDING STRUCTURES. CONDUIT SIZE, ROUTING AND PULL BOXES PER SITE PLAN DRAWINGS.

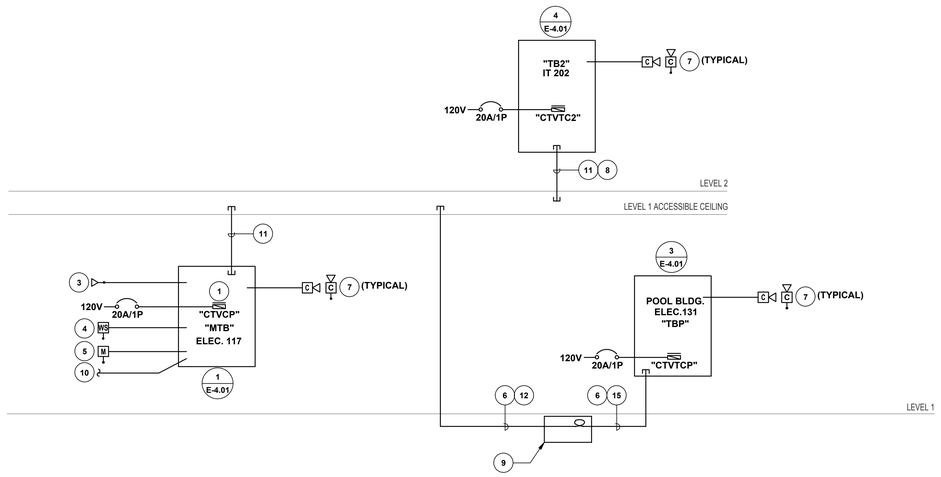

CLOSED CIRCUIT TELEVISION (CCTV) RISER DIAGRAM

SCALE: NONE

1

DIGALERT
DIAL TOLL FREE
1-800-422-4133
AT LEAST TWO DAYS BEFORE YOU DIG
UNDERGROUND SERVICE ALERT OF SOUTHERN CALIFORNIA

BASIS OF BEARINGS:

BEARINGS SHOWN HEREON ARE BASED ON THE CENTERLINE OF 162 ND STREET (FORMERLY MARKET STREET) BEING N 89° 55' 30" E SHOWN ON TRACT NO. 10901, M.B. 254/31-32

BENCHMARK:

THE CITY OF GARDENA BENCHMARK NO. 5D-15 ELEV. = 43.508

CONSULTANT:

FBA Engineering
Consulting Electrical Engineers
150 Pausteinos Avenue Suite A120
Costa Mesa, CA 92626
949.852.9995 • 949.852.1657 (fax)
fbaeng.com
FBA Job Number: 535050

REGISTERED PROFESSIONAL ENGINEER
No. 10372
09-30-24
ELECTRICAL
STATE OF CALIFORNIA
05/01/2023

PREPARED UNDER THE SUPERVISION OF:

RJM DESIGN GROUP
31591 Camino Capistrano
San Juan Capistrano, CA 92675
www.RJMdesigngroup.com
[949] 493-2690 fax
[949] 493-2600 phone

REGISTERED LANDSCAPE ARCHITECT
STEVEN A. RUNCIMAN
No. 5900
05-30-2023
RENEWAL
STATE OF CALIFORNIA

REVISIONS

NO.	DESCRIPTION	DATE	APPROVED
1	90% CD SUBMITTAL	12/15/2022	
2	100% CD SUBMITTAL	05/01/2023	
3	FINAL SUBMITTAL	10/02/2023	

CITY OF GARDENA
DEPARTMENT OF PUBLIC WORKS - ENGINEERING

CCTV SYSTEM NOTES, RISER DIAGRAM & DETAILS

COMMUNITY AQUATICS & SENIOR CENTER

SEC-0.04

	INITAL	DATE
DESIGNED BY	SR	11/14/2022
DRAWN BY	SR	09/26/2023
CHECKED BY	BZ	09/28/2023

APPROVED BY:

DATE
DIRECTOR OF PUBLIC WORKS

SHT. 187 OF 195 DWG. NO. 5-2606

FBA Engineering / Plot Date: 9/26/2023 11:12 AM / Plotted by: Steve Roth / Drawing Location: I:\535\050\SEC004.dwg

REF FILES: I:\531-550\535\DWG\
PLOT TIME: 9/26/2023 11:12:08 AM

KEY NOTES

(1) CONDUIT PROVIDED BY ELECTRICAL CONTRACTOR, REFER TO NOTE #5 ON E-1.01 FOR SIZES AND QUANTITIES.

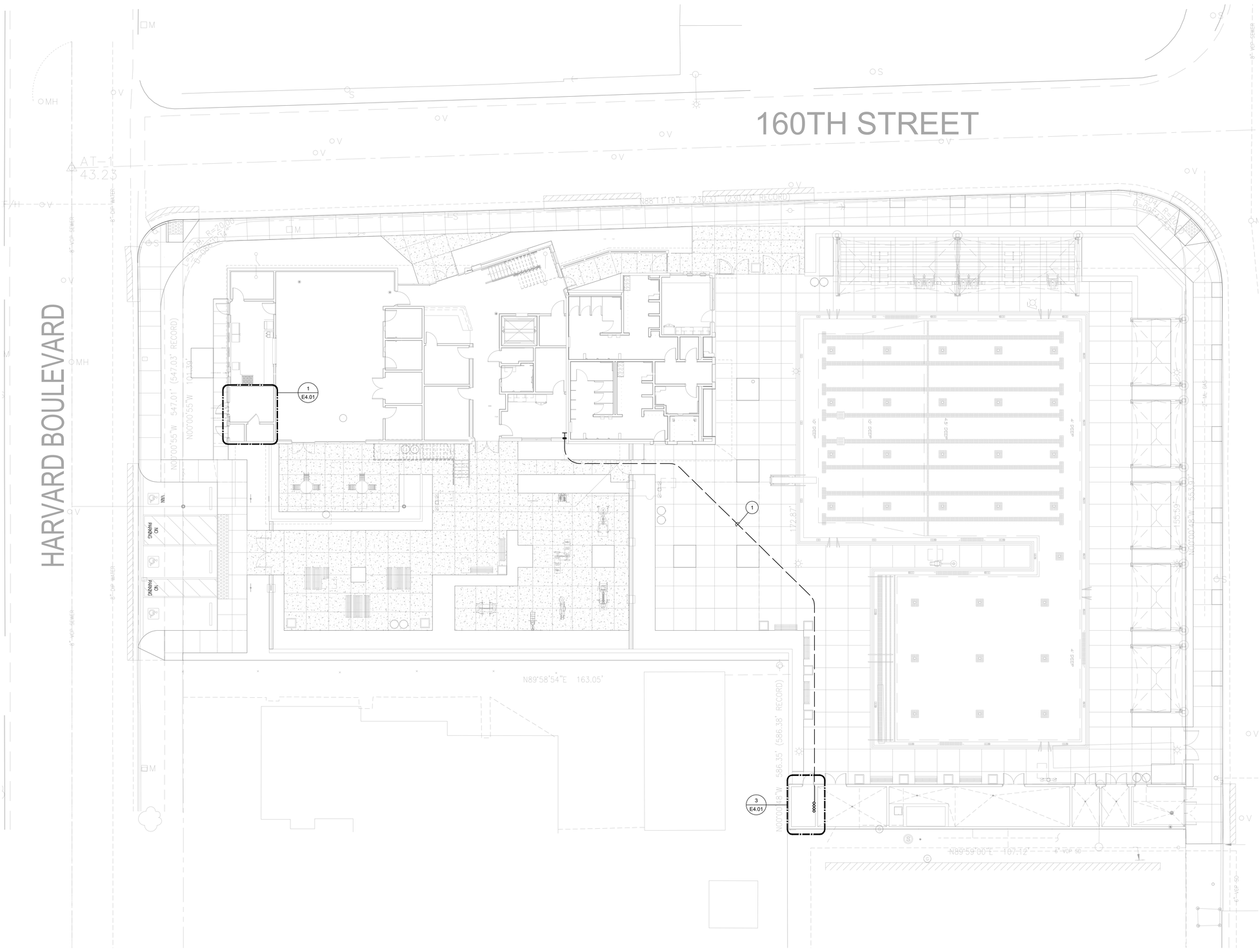

SECURITY GENERAL NOTES:

1. ALL WALL MOUNTED DEVICE HEIGHTS SHALL BE VERIFIED WITH ARCHITECTURAL ROOM ELEVATIONS PRIOR TO ROUGH-IN.
2. PENETRATIONS THROUGH FIRE RATED WALLS SHALL BE PROTECTED WITH AN APPROVED FIRE STOP SYSTEM EQUAL TO OR GREATER THAN THE RATING OF THE WALL BEING PENETRATED.
3. ALL DEVICES MOUNTED BACK-TO-BACK ON COMMON WALLS SHALL BE INSTALLED IN SEPARATE BOXES OFFSET 24-INCHES MINIMUM OR PROVIDED WITH PUTTY OR ANOTHER APPROVED SOUNDPROOF BACKING.
4. WHEN EXPOSED CEILING OR OPEN GRID CONDITIONS EXIST, CONTRACTOR SHALL PROVIDE:
   - A. ALL CONDUITS SHALL BE ROUTED PARALLEL TO BUILDING STRUCTURES AND RACKED NEATLY IN GROUPS OF MULTIPLE PATHWAYS.
   - B. ALL SECURITY CABLING SHALL BE:
     1) INSTALLED IN EMT CONDUIT PATHWAYS.
5. COORDINATE LOCATION OF ALL SECURITY DEVICES WITH ARCHITECT PRIOR TO ROUGH-IN.

SITE PLAN GENERAL NOTES:

1. LOCATIONS OF EXISTING UTILITIES ARE NOT SHOWN AND CONTRACTOR SHALL EXERCISE EXTREME CAUTION IN EXCAVATING AND TRENCHING ON THIS SITE TO AVOID EXISTING DUCTS, PIPING, OR CONDUITS, ETC., AND TO PREVENT HAZARDS TO PERSONNEL AND/OR DAMAGE TO EXISTING UNDERGROUND UTILITIES OR STRUCTURES WHETHER OR NOT SHOWN AND INSTALLED BY ANY OTHER CONTRACTS. THE ENGINEER IS NOT RESPONSIBLE FOR THE LOCATION OF UNDERGROUND UTILITIES OR STRUCTURES, WHETHER OR NOT SHOWN OR DETAILED AND INSTALLED BY ANY OTHER CONTRACTS. THE CONTRACTOR SHALL IMMEDIATELY NOTIFY THE ENGINEER, THE ENGINEER SHOULD SEARCH UNIDENTIFIED CONDITIONS BE DISCOVERED. THESE DRAWINGS AND SPECIFICATIONS DO NOT INCLUDE THE NECESSARY ELEMENTS FOR CONSTRUCTION SAFETY.
2. CONTRACTOR SHALL VERIFY THE LOCATION OF ANY EXISTING UNDERGROUND UTILITIES AND STRUCTURES PRIOR TO COMMENCEMENT OF WORK BY CONTACTING UNDERGROUND SERVICE ALERT (U.S.A.) AT 1(800) 422-4133, OR OTHER LOCAL APPLICABLE UNDERGROUND SERVICE ALERT AGENCIES.
3. THE DRAWINGS ILLUSTRATE LOCATIONS OF EQUIPMENT AND ASSEMBLIES, PULLBOXES, MANHOLES, HANDHOLES, AND VAULTS, INCLUDING OTHER ELECTRICAL UNDERGROUND STRUCTURES AND PATHWAYS. CONTRACTOR SHALL CLOSELY COORDINATE EXACT LOCATIONS AND MOUNTING DEPTHS OF ALL DEVICES, STRUCTURES AND PATHWAYS WITH OTHER TRADES PRIOR TO PLACEMENT, TO ENSURE FINAL LOCATIONS ARE OUTSIDE FEATURE LANDSCAPE AND ARCHITECTURAL AREAS AND ARE NOT IN CONFLICT WITH THE INSTALLATION OF MATERIALS BY OTHER TRADES.
4. SEE ARCHITECTURAL, CIVIL AND LANDSCAPE PLANS FOR EXACT LOCATION OF FIXTURES, PULLBOXES, MANHOLES, OTHER ELECTRICAL EQUIPMENT AND DEVICES, ETC. COORDINATE ALL UNDERGROUND STRUCTURES AND CONDUIT ROUTING WITH ARCHITECT OR OWNERS' REPRESENTATIVE PRIOR TO ROUGH-IN, TO ENSURE SUCH ITEMS ARE NOT PLACED IN PLANTING / HARDSCAPE AREAS.
5. ALL EQUIPMENT LOCATED OUTDOORS SHALL BE WEATHERPROOF, NEMA 3R RATED.
6. PROVIDE PULL STRING IN ALL EMPTY CONDUITS.

SITE SECURITY PLAN | SCALE: 3/32"=1'-0" | 1

DIGALERT
DIAL TOLL FREE
1-800-422-4133
AT LEAST TWO DAYS BEFORE YOU DIG
UNDERGROUND SERVICE ALERT OF SOUTHERN CALIFORNIA

BASIS OF BEARINGS:
BEARINGS SHOWN HEREON ARE BASED ON THE CENTERLINE OF 162 ND STREET (FORMERLY MARKET STREET) BEING N 89° 55' 30" E SHOWN ON TRACT NO. 10901, M.B. 254/31-32

BENCHMARK:
THE CITY OF GARDENA BENCHMARK NO. 5D-15 ELEV. = 43.508

CONSULTANT:
FBA Engineering
Consulting Electrical Engineers
150 Pausarino Avenue Suite A120
Costa Mesa, CA 92626
949.852.9995 • 949.852.1657 (fax)
fbaengr.com
FBA Job Number: 535050

REGISTERED PROFESSIONAL ENGINEER 10372 09-30-24 ELECTRICAL STATE OF CALIFORNIA
05/01/2023

PREPARED UNDER THE SUPERVISION OF:
RJM DESIGN GROUP
31591 Camino Capistrano
San Juan Capistrano, CA 92675
www.RJMdesigngroup.com
[949] 493-2850 *fax*
[949] 493-2600 *phone*

LICENSED LANDSCAPE ARCHITECT — Signature 09/30/2023 Renewal Date 1/31/2025 — STATE OF CALIFORNIA

REVISIONS			
NO.	DESCRIPTION	DATE	APPROVED
1	90% CD SUBMITTAL	12/16/2022	
2	100% CD SUBMITTAL	05/01/2023	
3	FINAL SUBMITTAL	10/02/2023	

CITY OF GARDENA
DEPARTMENT OF PUBLIC WORKS - ENGINEERING
SITE SECURITY PLAN
COMMUNITY AQUATICS & SENIOR CENTER
SEC-1.01

	INITAL	DATE
DESIGNED BY	SR	11/14/2022
DRAWN BY	SR	09/26/2023
CHECKED BY	BZ	09/28/2023

APPROVED BY:
DATE
DIRECTOR OF PUBLIC WORKS
SHT. 188 OF 195 DWG. NO. 5-2606

FBA Engineering / Plot Date: 9/26/2023 11:12 AM / Plotted by: Steve Roth / Drawing Location: I:\535\050\SEC101.dwg
REF.PATH: I:\535\050\SEC101.DWG
PLOT TIME: 9/26/2023 11:12:12 AM

KEY NOTES

1. (1) 2"C. (TELECOM.) & (3) 2"C.O. (ACCESS, SECURITY & CCTV) PROVIDED AND INSTALLED BY ELECTRICAL CONTRACTOR, SEE E-3.01.
2. LOW VOLTAGE CONDUIT TO POOL BUILDING PROVIDED AND INSTALLED BY ELECTRICAL CONTRACTOR, REFER TO NOTE #5 ON E-1.01 FOR QUANTITIES, SIZE AND CONTINUATION.

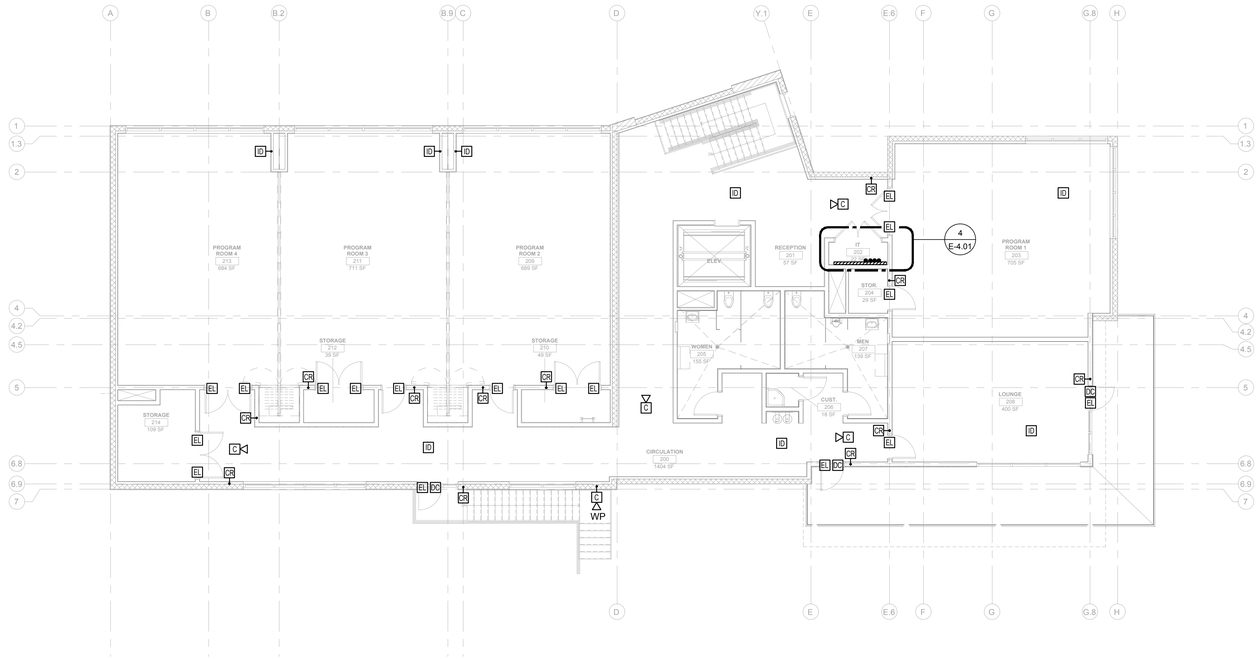

0 4 8 16
SCALE: 1 inch = 8 ft.

BUILDING SECOND FLOOR SECURITY PLAN | SCALE: 1/8"=1'-0" | 2

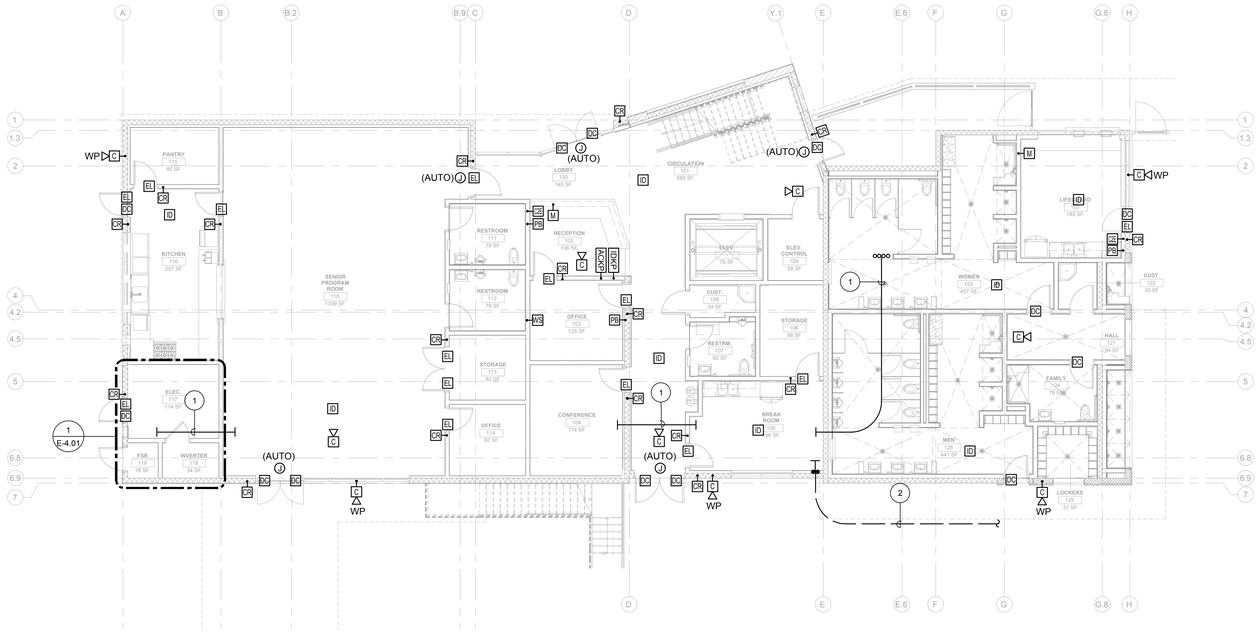

0 4 8 16
SCALE: 1 inch = 8 ft.

BUILDING FIRST FLOOR SECURITY PLAN | SCALE: 1/8"=1'-0" | 1

SECURITY GENERAL NOTES:

1. ALL WALL MOUNTED DEVICE HEIGHTS SHALL BE VERIFIED WITH ARCHITECTURAL ROOM ELEVATIONS PRIOR TO ROUGH-IN.
2. PENETRATIONS THROUGH FIRE RATED WALLS SHALL BE PROTECTED WITH AN APPROVED FIRE STOP SYSTEM EQUAL TO OR GREATER THAN THE RATING OF THE WALL BEING PENETRATED.
3. ALL DEVICES MOUNTED BACK-TO-BACK ON COMMON WALLS SHALL BE INSTALLED IN SEPARATE BOXES OFFSET 24-INCHES MINIMUM OR PROVIDED WITH PUTTY OR ANOTHER APPROVED SOUNDPROOF BACKING.
4. WHEN EXPOSED CEILING OR OPEN GRID CONDITIONS EXIST, CONTRACTOR SHALL PROVIDE:
   - A. ALL CONDUITS SHALL BE ROUTED PARALLEL TO BUILDING STRUCTURES AND RACKED NEATLY IN GROUPS OF MULTIPLE PATHWAYS.
   - B. ALL SECURITY CABLING SHALL BE:
     1) INSTALLED IN EMT CONDUIT PATHWAYS.
5. COORDINATE LOCATION OF ALL SECURITY DEVICES WITH ARCHITECT PRIOR TO ROUGH-IN.

DIGALERT
DIAL TOLL FREE 1-800-422-4133
AT LEAST TWO DAYS BEFORE YOU DIG
UNDERGROUND SERVICE ALERT OF SOUTHERN CALIFORNIA

BASIS OF BEARINGS:

BEARINGS SHOWN HEREON ARE BASED ON THE CENTERLINE OF 162 ND STREET (FORMERLY MARKET STREET) BEING N 89° 55' 30" E SHOWN ON TRACT NO. 10901, M.B. 254/31-32

BENCHMARK:

THE CITY OF GARDENA BENCHMARK NO. 5D-15 ELEV. = 43.508

CONSULTANT:

FBA Engineering
Consulting Electrical Engineers
150 Paularino Avenue Suite A120
Costa Mesa, CA 92626
949.852.9995 • 949.852.1657 (fax)
fbaengr.com
FBA Job Number: 535050

REGISTERED PROFESSIONAL ENGINEER — BRIAN D. SHEA — No. 10372 — EXP. 09-30-24 — ELECTRICAL — STATE OF CALIFORNIA
05/01/2023

PREPARED UNDER THE SUPERVISION OF:

RJM DESIGN GROUP
31591 Camino Capistrano
San Juan Capistrano, CA 92675
www.RJMdesigngroup.com
[949] 493-2690 fax
[949] 493-2600 phone

LICENSED LANDSCAPE ARCHITECT — STEVEN R. ROTH — Signature — 05/30/2023 — Date — 5-30-2023 — STATE OF CALIFORNIA

REVISIONS			
NO.	DESCRIPTION	DATE	APPROVED
1	90% CD SUBMITTAL	12/15/2022	
2	100% CD SUBMITTAL	05/01/2023	
3	FINAL SUBMITTAL	10/02/2023	

CITY OF GARDENA
DEPARTMENT OF PUBLIC WORKS - ENGINEERING

BUILDING SECURITY PLANS

COMMUNITY AQUATICS & SENIOR CENTER

SEC-3.01

	INITAL	DATE	APPROVED BY:
DESIGNED BY	SR	11/14/2022	
DRAWN BY	SR	09/26/2023	DATE
CHECKED BY	BZ	09/28/2023	DIRECTOR OF PUBLIC WORKS

SHT. 189 OF 195 DWG. NO. 5-2606

REF FILES: I:\535\050\SEC301.DWG
PLOT TIME: 9/26/2023 11:12:13 AM

FBA Engineering / Plot Date: 9/26/2023 11:12 AM / Plotted by: Steve Roth / Drawing Location: I:\535\050\SEC301.dwg

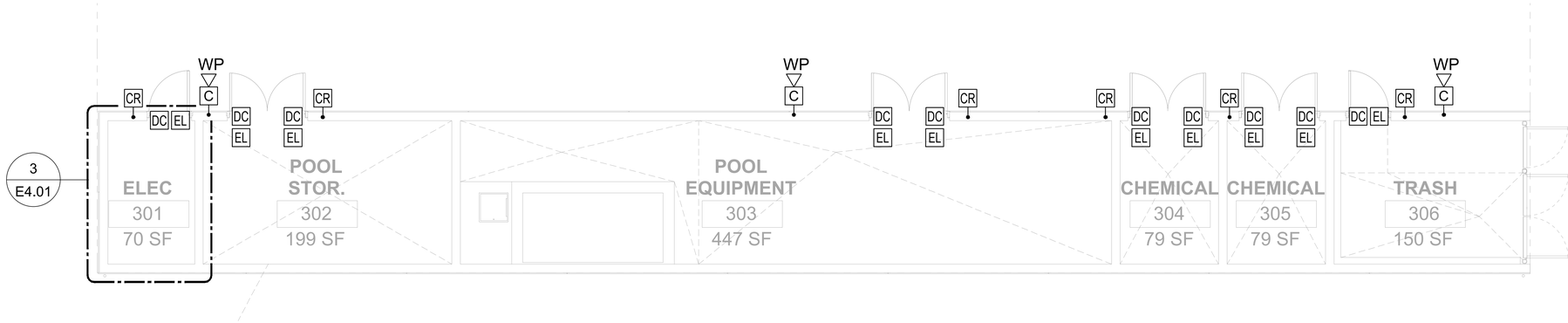

0 2 4 8

SCALE: 1 inch = 4 ft.

POOL BUILDING SECURITY PLAN | SCALE: 1/4"=1'-0" | 1

SECURITY GENERAL NOTES:

1. ALL WALL MOUNTED DEVICE HEIGHTS SHALL BE VERIFIED WITH ARCHITECTURAL ROOM ELEVATIONS PRIOR TO ROUGH-IN.
2. PENETRATIONS THROUGH FIRE RATED WALLS SHALL BE PROTECTED WITH AN APPROVED FIRE STOP SYSTEM EQUAL TO OR GREATER THAN THE RATING OF THE WALL BEING PENETRATED.
3. ALL DEVICES MOUNTED BACK-TO-BACK ON COMMON WALLS SHALL BE INSTALLED IN SEPARATE BOXES OFFSET 24-INCHES MINIMUM OR PROVIDED WITH PUTTY OR ANOTHER APPROVED SOUNDPROOF BACKING.
4. WHEN EXPOSED CEILING OR OPEN GRID CONDITIONS EXIST, CONTRACTOR SHALL PROVIDE:
   - A. ALL CONDUITS SHALL BE ROUTED PARALLEL TO BUILDING STRUCTURES AND RACKED NEATLY IN GROUPS OF MULTIPLE PATHWAYS.
   - B. ALL SECURITY CABLING SHALL BE:
     1) INSTALLED IN EMT CONDUIT PATHWAYS.
5. COORDINATE LOCATION OF ALL SECURITY DEVICES WITH ARCHITECT PRIOR TO ROUGH-IN.

DIGALERT
DIAL TOLL FREE
1-800-422-4133
AT LEAST TWO DAYS BEFORE YOU DIG
UNDERGROUND SERVICE ALERT OF SOUTHERN CALIFORNIA

BASIS OF BEARINGS:

BEARINGS SHOWN HEREON ARE BASED ON THE CENTERLINE OF 162 ND STREET (FORMERLY MARKET STREET) BEING N 89° 55' 30" E SHOWN ON TRACT NO. 10901, M.B. 254/31-32

BENCHMARK:

THE CITY OF GARDENA BENCHMARK NO. 5D-15 ELEV. = 43.508

CONSULTANT:
FBA Engineering
Consulting Electrical Engineers
150 Paularino Avenue Suite A120
Costa Mesa, CA 92626
949.852.9995 • 949.852.1657 (fax)
fbaengr.com
FBA Job Number: 535050

REGISTERED PROFESSIONAL ENGINEER — No. 10372 — 09-30-24 — ELECTRICAL — STATE OF CALIFORNIA

05/01/2023

PREPARED UNDER THE SUPERVISION OF:
RJM DESIGN GROUP
31591 Camino Capistrano
San Juan Capistrano, CA 92675
www.RJMdesigngroup.com
[949] 493-2690 fax
[949] 493-2600 phone

REGISTERED LANDSCAPE ARCHITECT — STATE OF CALIFORNIA

REVISIONS			
NO.	DESCRIPTION	DATE	APPROVED
1	90% CD SUBMITTAL	12/15/2022	
2	100% CD SUBMITTAL	05/01/2023	
3	FINAL SUBMITTAL	10/02/2023	

CITY OF GARDENA
DEPARTMENT OF PUBLIC WORKS - ENGINEERING

POOL BUILDING SECURITY PLAN

COMMUNITY AQUATICS & SENIOR CENTER
SEC-3.03

	INITAL	DATE	APPROVED BY:
DESIGNED BY	SR	11/14/2022	
DRAWN BY	SR	09/26/2023	DATE
CHECKED BY	BZ	09/28/2023	DIRECTOR OF PUBLIC WORKS

SHT. 190 OF 195 DWG. NO. S-2606

FBA Engineering / Plot Date: 9/26/2023 11:12 AM / Plotted by: Steve Roth / Drawing Location: I:\535\050\SEC303.dwg
REF FILES: I:\535\050\E3DCS\SHHG
PLOT TIME: 9/26/2023 11:12:27 AM

TELECOMMUNICATIONS SYSTEM GENERAL NOTES

1. THESE DRAWINGS AND SPECIFICATIONS ARE INTENDED TO COVER A COMPLETE INSTALLATION OF THE TELECOMMUNICATIONS (VOICE/DATA/VIDEO) SYSTEM. THE OMISSION OR EXPRESSED REFERENCE TO ANY ITEM OF LABOR OR MATERIALS REQUIRED FOR THE PROPER EXECUTION OF THE WORK IN ACCORDANCE WITH PRESENT PRACTICE OF THE TRADE SHALL NOT RELIEVE THE CONTRACTOR FROM PROVIDING SUCH ADDITIONAL LABOR AND MATERIALS.

2. THE DESIGN-BUILD TELECOMMUNICATION CONTRACTOR IS RESPONSIBLE FOR THE DESIGN AND CONSTRUCTION OF A COMPLETE TELECOMMUNICATION SYSTEM BASED ON THESE CONCEPTUAL PLANS AND SPECIFICATIONS.

3. THE TELECOMMUNICATION CONTRACTOR IS REQUIRED TO REVIEW ALL OF THE PROJECT'S CONSTRUCTION DOCUMENTS AS A WHOLE IN ORDER TO IDENTIFY ALL REQUIREMENTS THAT DIRECTLY OR INDIRECTLY AFFECT ITS PORTION OF THE TELECOMMUNICATION WORK, EVEN REQUIREMENTS LOCATED IN SECTIONS DESIGNATED AS APPLICABLE TO OTHER TRADES. IN CASE OF CONFLICTS, THE CONTRACTOR SHALL EITHER OBTAIN DIRECTION FROM THE OWNER'S REPRESENTATIVE OR OTHERWISE APPLY THE MORE STRINGENT REQUIREMENT

4. REFER TO THE ELECTRICAL PLANS AND SPECIFICATIONS FOR ADDITIONAL INFORMATION AND REQUIREMENTS. ALL APPLICABLE PORTIONS SHALL APPLY TO THE TELECOMMUNICATIONS SCOPE OF WORK.

5. THE TELECOMMUNICATION SYSTEM AS SHOWN ON THESE PLANS IS CONCEPTUAL ONLY AND IS BASED ON INITIAL OWNER AND DESIGN TEAM INPUT RECEIVED. THE TELECOMMUNICATION CONTRACTOR IS RESPONSIBLE FOR MODIFYING THE TELECOMMUNICATION SYSTEM AND DESIGN INTENT TO THE ACTUAL CONDITIONS OF THIS PROJECT AND THE OWNER'S FINAL NEEDS. COORDINATE, CONFIRM AND FINALIZE THE SYSTEMS EQUIPMENT, FEATURES, COVERAGE AND PROGRAMMING WITH THE OWNER'S REPRESENTATIVE. VERIFY WITH THE OWNER'S REPRESENTATIVE THE LEVEL OF INTEGRATION WITH OTHER SYSTEMS SUCH AS AV, SECURITY/CCTV, LIGHTING CONTROL, ENERGY MANAGEMENT, ETC.

6. THE TELECOMMUNICATION CONTRACTOR SHALL DEVELOP A COMPLETE SET OF CONSTRUCTION DOCUMENTS, PLANS AND SPECIFICATIONS AND SUBMIT TO THE OWNER'S REPRESENTATIVE FOR APPROVAL BEFORE THE START OF CONSTRUCTION.

7. PROVIDE ALL REQUIRED MATERIALS INCLUDING BUT NOT LIMITED TO EQUIPMENT, HARDWARE, DEVICES, RACKS, TERMINAL CABINETS, CONTROLLERS, POWER SUPPLIES, WIRING AND CABLING, WIRE/CABLING MANAGEMENTS SYSTEMS AND SUPPORTS, CONDUITS AND RACEWAYS, ETC. FOR A COMPLETE AND OPERABLE TELECOMMUNICATION SYSTEMS.

8. WIRELESS DEVICES AND/OR COMPONENTS ARE NOT ALLOWED AS PART OF THE BASE BID UNLESS OTHERWISE NOTED. APPROVAL OF WIRELESS SYSTEMS SHALL BE AT THE DISCRETION OF THE OWNER'S REPRESENTATIVE.

9. ALL SYSTEM SOFTWARE PLATFORMS AND QUANTITY OF LICENSES SHALL BE PROVIDED FOR ALL FURNISHED EQUIPMENT AS PART OF THE TELECOMMUNICATION CONTRACTORS COMPLETE AND OPERABLE SYSTEMS. ALL SOFTWARE PLATFORMS INSTALLED SHALL BE THE FULL AND COMPLETE VERSION OF THE MOST RECENT SOFTWARE PACKAGES AVAILABLE AT THE TIME OF THE INSTALLATION. THE OWNER'S REPRESENTATIVE SHALL BE PROVIDED WITH THE FORMAL COPIES OF ALL LICENSES AND FURNISHED WITH ALL USERNAMES AND PASSWORDS FOR THE SYSTEM AS PART OF THE CLOSE-OUT DOCUMENTATION.

10. THE TELECOMMUNICATIONS CONTRACTOR SHALL BE A LICENSED (C-7) LOW VOLTAGE SYSTEMS CONTRACTOR AND A LICENSED (C-10) ELECTRICAL CONTRACTOR AND SHALL HAVE BEEN IN BUSINESS FURNISHING AND INSTALLING SIMILAR SYSTEMS IN SCOPE AND SIZE FOR A MINIMUM OF FIVE (5) YEARS.

11. THE TELECOMMUNICATION CONTRACTOR SHALL BE A FACTORY AUTHORIZED DISTRIBUTOR, INSTALLER AND WARRANTY PROVIDER FOR THE MANUFACTURER OF THE EQUIPMENT TO BE INSTALLED. PROVIDE LETTER FROM THE SYSTEMS MANUFACTURERS CERTIFYING THAT THE CONTRACTOR IS AN AUTHORIZED DISTRIBUTOR AND INSTALLER OF THE EQUIPMENT. PROVIDE CERTIFICATES OF TRAINING FOR PERSONNEL PERFORMING THE WORK.

12. THE TELECOMMUNICATION CONTRACTOR SHALL MAINTAIN A FULLY EQUIPPED SERVICE DEPARTMENT CAPABLE OF FURNISHING ADEQUATE REPAIR SERVICES FOR THE WARRANTED EQUIPMENT WITH RESPONSE TIMES TO THE PROJECT SITE WITHIN 4-HOURS.

13. ALL WORK AND EQUIPMENT SHALL BE GUARANTEED IN WRITING FOR A PERIOD OF 1-YEAR AFTER FINAL ACCEPTANCE OF WORK. PROVIDE AN EXTENDED 1-YEAR WARRANTY FOR A TOTAL OF 2-YEARS FROM FINAL ACCEPTANCE OF WORK.

14. THE CONSTRUCTION DOCUMENTS, PLANS AND SPECIFICATIONS AND ALL WORK AND MATERIALS SHALL BE IN FULL ACCORDANCE WITH ALL LEGAL AND INDUSTRY REQUIREMENTS AND STANDARDS INCLUDING WITHOUT LIMITATION THE FOLLOWING:

   A. CALIFORNIA CODE OF REGULATIONS TITLE 24, PARTS 1 AND 2 (CALIFORNIA BUILDING CODE), 2022 EDITION.
   B. CALIFORNIA CODE OF REGULATIONS TITLE 24, PART 3 (CALIFORNIA ELECTRICAL CODE), 2022 EDITION.
   C. CALIFORNIA CODE OF REGULATIONS TITLE 24, PART 9 (CALIFORNIA FIRE CODE), 2022 EDITION.
   D. OTHER REGULATING AGENCIES WHICH MAY HAVE AUTHORITY OVER ANY PORTION OF THE WORK, INCLUDING THE STATE OF CALIFORNIA DIVISION OF INDUSTRIAL SAFETY, AND THOSE CODES AND STANDARDS LISTED IN THESE NOTES AND SPECIFICATIONS.
   E. THE ELECTRICAL SYSTEMS FUNCTIONALITY STANDARDS SET FORTH IN TITLE 7 OF THE CALIFORNIA CIVIL CODE (THE "RIGHT TO REPAIR ACT").
   F. THE MANUFACTURER'S REQUIREMENTS OR RECOMMENDATIONS FOR ANY INCORPORATED PRODUCTS.
   G. THE MOST CURRENT APPROVED ISSUES OF ANY NOTED SPECIFICATIONS, CODES AND STANDARDS, INCLUDING SUPPLEMENTS, UNLESS NOTED OTHERWISE.

15. IN INTERPRETING THESE PLANS, THE FOLLOWING GENERAL RULES APPLY:

   A. WRITTEN DIMENSIONS SHALL TAKE PRECEDENCE OVER SCALED DRAWINGS.
   B. SCALED DIMENSIONS AND GRAPHICALLY SHOWN LOCATIONS ARE TO BE CONSIDERED ONLY APPROXIMATE, FIELD VERIFY DIMENSIONS PRIOR TO BID.
   C. BECAUSE THE PLANS ARE INTENDED TO SET FORTH THE REQUIREMENTS FOR CONSTRUCTION IN ONLY AN INDUSTRY-STANDARD LEVEL OF QUALITY AND DETAIL, AND THEREFORE ARE INTENDED TO BE SUPPLEMENTED BY APPROPRIATE REQUESTS FOR CLARIFICATION AND INFORMATION, ERRORS AND OMISSIONS AND TO BRING THESE ERRORS AND OMISSIONS TO THE ATTENTION OF AN APPROPRIATE OWNER REPRESENTATIVE IN A TIMELY MANNER AND ASSUMES THE RISK OF THE CONSEQUENCES OF FAILING TO DO SO BEFORE BIDDING OR OTHERWISE PROCEEDING.
   D. THE CONTRACTOR SHALL REVIEW AND VERIFY ALL DIMENSIONS PRIOR TO STARTING CONSTRUCTION AND NOTIFY THE ELECTRICAL ENGINEER IMMEDIATELY OF ANY DISCREPANCIES OR INCONSISTENCIES.

16. SUBMIT COMPLETE CONSTRUCTION DOCUMENTS, PLANS, SPECIFICATIONS AND CATALOG DATA SHEETS FOR THE TELECOMMUNICATION SYSTEMS TO THE OWNER'S REPRESENTATIVE FOR APPROVAL. SUBMITTALS SHALL AT THE MINIMUM INCLUDE THE FOLLOWING:

   A. COPIES OF CONTRACTORS CURRENT C-7 LOW VOLTAGE CONTRACTOR LICENSE AND C-10 ELECTRICAL CONTRACTORS LICENSE.
   B. COPY OF THE EQUIPMENT MANUFACTURERS AUTHORIZATION LETTERS CERTIFYING THE CONTRACTOR AS AN AUTHORIZED DISTRIBUTOR AND INSTALLER.
   C. COPIES OF CERTIFICATES OF TRAINING FOR THE INSTALLING PERSONNEL AND PROOF THAT THEY ARE LOCATED AT THE CONTRACTOR'S LOCAL FACILITY.
   D. LIST OF PROJECTS SIMILAR IN SCOPE AND SIZE THAT HAVE BEEN COMPLETED IN THE LAST FIVE (5) YEARS.
   E. MANUFACTURERS AND CONTRACTORS' WARRANTIES.
   F. PLANS FOR THE SITE AND BUILDING AT THE SAME SCALE AS THE CONTRACT DRAWINGS. PLANS SHALL SHOW WALLS, DOORS, WINDOWS, ROOM NUMBERS, ROOM NAMES. THE PLANS SHALL INCLUDE THE TYPE AND LOCATION OF ALL EQUIPMENT, HARDWARE, DEVICES, RACKS, TERMINAL CABINETS, CONTROLLERS, WIRING AND CABLING, CONDUIT AND RACEWAYS, ETC.
   G. PLANS SHALL INCLUDE LEGENDS, DEVICE AND BACKBOX MOUNTING REQUIREMENTS AND HEIGHTS. THE MOUNTING HEIGHTS SHALL BE SYMMETRICAL FOR ALL TYPES OF DEVICES.
   H. PLANS SHALL INCLUDE RISER DIAGRAMS, SINGLE LINE DIAGRAMS, WIRING DIAGRAMS CALCULATIONS FOR THE COMPLETE SYSTEM.
   I. PLANS SHALL SHOW INTERFACE WITH OTHER SYSTEMS THAT ARE REQUIRED TO BE INTEGRATED.
   J. MANUFACTURERS CATALOG DATA AND CUT SHEETS FOR ALL EQUIPMENT.
   K. TESTING AND COMMISSIONING PROCEDURES COORDINATED WITH THE OWNER'S REQUIREMENTS AND MANUFACTURE'S STANDARDS INCLUDING ANSI/TIS-568-C.0, C.1, C.2 AND C.3.

17. SUBMITTALS WILL BE REVIEWED BY THE ELECTRICAL ENGINEER, IF AT ALL, ONLY PURSUANT TO THE INDUSTRY-STANDARD PROTOCOL SET FORTH IN AIA DOCUMENT A201, AND IN NO EVENT WILL THE SUBMITTAL REVIEW PROCESS RELIEVE OR LESSEN THE SUBMITTING CONTRACTOR'S RESPONSIBILITY FOR AN INAPPROPRIATE SUBMITTAL.

18. IN NO EVENT WILL ANY SITE VISITS BY THE ELECTRICAL ENGINEER CONCERN CONSTRUCTION MEANS AND METHODS OR CONSTRUCTION SAFETY, AND ALL SUCH MATTERS SHALL REMAIN THE SOLE RESPONSIBILITY OF THE CONTRACTOR.

19. COPIES OF THE PLANS PROVIDED IN ANY ELECTRONIC FORM ARE SUBJECT TO THE SAME PROVISIONS AS THE OTHER INSTRUMENTS OF SERVICE PREPARED BY OR ON BEHALF OF THE ELECTRICAL ENGINEER FOR THE PROJECT, INCLUDING WITHOUT LIMITATION THE ENGINEER'S COMMON LAW, STATUTORY OR OTHER RESERVED RIGHTS, INCLUDING COPYRIGHTS. A RECIPIENT IS GRANTED AT MOST A TRANSFERABLE NONEXCLUSIVE LICENSE TO REUSE THE PLANS SOLELY FOR PROJECT PURPOSES, AND NO RECIPIENT IS AUTHORIZED TO USE OR TO ALLOW THE USE OF ALL OR ANY PORTION OF THESE PLANS FOR ANY OTHER PURPOSE, AND ANY USE FOR ANY OTHER PURPOSE WOULD CONSTITUTE ACTIONABLE PLAGIARISM. ELECTRICAL ENGINEER PROVIDES DOCUMENTS IN AN ELECTRONIC FORM ONLY IN ITS STANDARD FORMATS AND CONVENTIONS AND WITH NO GUARANTEE OF COMPATIBILITY WITH ANY RECIPIENT'S SOFTWARE OR HARDWARE AND ANY USE WITH OR CONVERSION TO OTHER FORMATS OR CONVENTIONS, OR THE USE WITH ANY PARTICULAR SOFTWARE OR HARDWARE, IS AT THE RECIPIENT'S SOLE RISK.

20. THE DRAWINGS INDICATE, IN A DIAGRAMMATIC MANNER, THE DESIRED LOCATIONS AND ARRANGEMENT OF THE COMPONENTS OF TELECOMMUNICATIONS WORK. DETERMINE EXACT TELECOMMUNICATION EQUIPMENT, CONDUIT AND WIRING ROUTING, CONDUIT BENDS, AUXILIARY JUNCTION BOXES, SUPPORTS AND UNDEFINED CONSTRUCTION DETAILS AS A JOB CONDITION TO BE INSTALLED IN ACCORDANCE WITH THE APPLICABLE CODE REQUIREMENTS. PROPER JUDGEMENT MUST BE EXERCISED IN EXECUTING THE WORK SO AS TO SECURE THE BEST POSSIBLE INSTALLATION IN THE AVAILABLE SPACE AND TO OVERCOME LOCAL DIFFICULTIES DUE TO SPACE LIMITATIONS OR INTERFERENCE OF CONDITIONS ENCOUNTERED.

21. IN THE EVENT CHANGES IN THE INDICATED LOCATIONS OR ARRANGEMENTS ARE NECESSARY, DUE TO DEVELOPED CONDITIONS IN THE BUILDING CONSTRUCTION OR REARRANGEMENT OF EQUIPMENT, SUCH CHANGES SHALL BE MADE WITHOUT COST PROVIDING THE CHANGE IS ORDERED BEFORE THE CONDUIT RUNS, ETC., AND WORK DIRECTLY CONNECTED TO SAME IS INSTALLED AND NO EXTRA MATERIALS ARE REQUIRED.

22. PROVIDE ALL EQUIPMENT WITH ENCLOSURES LISTED OR LABELED FOR USE AND LOCATION WHERE SUCH EQUIPMENT IS INSTALLED.

23. PROVIDE UL LISTED FIRE STOP FOR ALL PENETRATIONS THROUGH FIRE RATED FLOORS, WALLS, AND CEILINGS TO MAINTAIN ALL FIRE RATINGS.

24. GROUNDING SHALL BE EXECUTED IN ACCORDANCE WITH ALL APPLICABLE CODES AND REGULATIONS, BOTH OF THE STATE OF CALIFORNIA AND LOCAL AUTHORITIES HAVING JURISDICTION.

25. CONDUIT FOR ROOF MOUNTED EQUIPMENT SHALL BE ROUTED BELOW ROOF AND WITHIN BUILDING.

26. ALL TELECOMMUNICATION EQUIPMENT SHALL BE NEW AND BE U.L. OR ETL LISTED AND LABELED.

TELECOMMUNICATIONS SYMBOLS LIST

NOTE: REFERENCE ELECTRICAL SHEETS FOR ADDITIONAL GENERAL ELECTRICAL SYMBOLS. ALL APPLICABLE PORTIONS SHALL APPLY TO THIS SCOPE OF WORK AS THOUGH WRITTEN HEREIN.

- JUNCTION BOX, FLUSH WALL MOUNTED, +18".
- JUNCTION BOX CONCEALED ABOVE ACCESSIBLE CEILING.
- INDICATES CONNECTION TO EQUIPMENT AS REQUIRED, TYPICAL.
- CONTROL PANEL OR TERMINAL CABINET AS INDICATED ON PLANS.
- INDICATES CONDUIT DROP WITHIN BUILDING WALL.
- INDICATES CONDUIT RISER WITHIN BUILDING WALL.
- TELEPHONE BACKBOARD PROVIDED & INSTALLED BY ELECTRICAL CONTRACTOR, SEE E-4.01.
- TELEPHONE OUTLET MOUNTED AT +18" AFF - UON. PROVIDE 3/4"C. TO POINT ABOVE ACCESSIBLE CEILING SPACE OR AS OTHERWISE INDICATED. CONDUIT & OUTLET BOX PROVIDED & INSTALLED BY ELECTRICAL CONTRACTOR, SEE E-3.01.
  W - DENOTES WALL MOUNTED AT +45" AFF - UON
- DATA OUTLET MOUNTED AT +18" AFF - UON. PROVIDE 3/4"C. TO POINT ABOVE ACCESSIBLE CEILING SPACE OR AS OTHERWISE INDICATED. CONDUIT & OUTLET BOX PROVIDED & INSTALLED BY ELECTRICAL CONTRACTOR, SEE E-3.01.
  W - DENOTES WALL MOUNTED AT +45" AFF - UON
- COMBINATION TELEPHONE/DATA OUTLET MOUNTED AT +18" AFF - UON. PROVIDE 3/4"C. TO POINT ABOVE ACCESSIBLE CEILING SPACE OR AS OTHERWISE INDICATED. CONDUIT & OUTLET BOX PROVIDED & INSTALLED BY ELECTRICAL CONTRACTOR, SEE E-3.01.
  W - DENOTES WALL MOUNTED AT +45" AFF - UON
- WAP — WIRELESS ACCESS POINT ON FLUSH CEILING MOUNTED OUTLET BOX.
- WA — EXTERIOR WIRELESS ACCESS POINT ON FLUSH WALL MOUNTED WEATHERPROOF OUTLET BOX. PROVIDE 3/4"C. TO NEAREST TELEPHONE BACKBOARD IN IDF CLOSET.
- TV — RECESSED FLAT PANEL TV/DISPLAY WALL BOX PROVIDED AND INSTALLED BY ELECTRICAL CONTRACTOR, REFER TO E-0.01 & E-3.01.
- C / E-2 — DETAIL CALLOUT, "C" INDICATES DETAIL, "E-2" INDICATES DRAWING WHERE DETAIL OCCURS.
- 1 — PLAN OR KEY NOTE CALLOUT. REFER TO CORRESPONDING NOTE ON DRAWING WHERE CALLOUT OCCURS.
- S — FLUSH CEILING MOUNTED PA SPEAKER WITH 3/4"C. TO NEAREST ACCESSIBLE CEILING SPACE.
- WP S — WEATHERPROOF PA SPEAKER WITH 3/4"C. TO NEAREST ACCESSIBLE CEILING SPACE.

ABBREVIATIONS

A	AMPS	FLA	FULL LOAD AMPS
AFC	ABOVE FINISHED COUNTER	G	GROUND
AFF	ABOVE FINISH FLOOR	GFI	GROUND FAULT INTERRUPTER
AFG	ABOVE FINISH GRADE	GRC/RGC	GALVANIZED RIGID CONDUIT
BDF	BUILDING DISTRIBUTION FRAME	IDF	INTERMEDIATE DISTRIBUTION FRAME
C	CONDUIT	IMC	INTERMEDIATE METALLIC TUBING
CB	CIRCUIT BREAKER	MCB	MAIN CIRCUIT BREAKER
CBC	CALIFORNIA BUILDING CODE	MDF	MAIN DISTRIBUTION FRAME
CCTV	CLOSED CIRCUIT TELEVISION	MFGR/MFR	MANUFACTURER
CFC	CALIFORNIA FIRE CODE	MIN	MINIMUM
CKT	CIRCUIT	MLO	MAIN LUGS ONLY
CO	CONDUIT ONLY W/ PULL STRING	MOCP	MAXIMUM OVER CURRENT PROTECTION
CU	COPPER	NEC	NATIONAL ELECTRIC CODE
(D)	DEMOLISH OR REMOVE	NIC	NOT IN CONTRACT
DIA	DIAMETER	NL	NIGHT LIGHT
DISC	DISCONNECT	OC	ON CENTER
EMT	ELECTRIC METALLIC TUBING	PTZ	PAN-TILT-ZOOM
(E)	EXISTING TO REMAIN	OFCI	OWNER FURNISHED, CONTRACTOR INSTALLED
EC	ELECTRICAL CONTRACTOR	UON	UNLESS OTHERWISE NOTED
EF	EXHAUST FAN	V	VOLTS
EM	EMERGENCY	VL	VERIFY LOCATION
EMS	ENERGY MANAGEMENT SYSTEM	WP	WEATHERPROOF
(ER)	EXISTING TO BE REMOVED	XFMR	TRANSFORMER

LOW VOLTAGE SYSTEMS CABLING MATRIX

APPLICATION	TYPE	CABLE COLOR	SYSTEM
VOICE / DATA	CAT 7	RED/BLUE	VOIP / NETWORK DATA SYSTEMS
VOICE	CAT 7	RED	VOIP
DATA	CAT 7	BLUE	NETWORK DATA SYSTEMS
TELEVISION	CAT 7	GRAY	VIDEO
TELEVISION	RG11 / RG6	BLACK	VIDEO
CAMERAS	NA	NA	FUTURE
CAMERAS	NA	NA	FUTURE
FIBER BACKBONE MULTI-MODE	50μc/12S	ORANGE	VOICE / DATA SURVEILLANCE
COPPER BACKBONE (25 PAIR COUNT)	CAT 7	BROWN	VOICE / DATA
WIRELESS ACCESS	CAT 7	PURPLE	VIDEO

DIVISION OF RESPONSIBILITY

	TELEVISION & ASSOCIATED AUDIO/VISUAL DEVICES	J-BOXES, CONDUIT, ROUGH-IN, 120V TO SUPPLY POWER	DEVICES AND CABLING	HEAD END UNIT	SYSTEMS INTEGRATION	DEVICE PLACEMENT LOCATIONS AND AIMING	TESTING AND COMMISSIONING	DOOR HARDWARE SPEC TO ARCHITECT/OWNER	TELEPHONE & DATA SYSTEM PROCUREMENT, INSTALLATION, AND PROGRAMMING	CABLE TRAYS, PLYWOOD BACKBOARDS, GROUND BUS BAR
AUDIO/VISUAL CONTRACTOR			X	X	X	X	X			
ELECTRICAL CONTRACTOR		X	CABLING ONLY							X
FIRE ALARM CONTRACTOR			X	X			X			
GENERAL CONTRACTOR		X	CABLING ONLY							X
OWNER	(OFCI)					X				
OWNER'S I.T.									X	
SECURITY CONTRACTOR			X	X			X			
SECURITY SYSTEMS INTEGRATOR			DEVICES ONLY	X	X			X		

(OFCI) OWNER FURNISHED & CONTRACTOR INSTALLED

CONDUIT FILL SCHEDULE

CONDUIT (EMT, TRADE SIZE)	MAXIMUM NUMBER OF CONDUCTORS/CABLES (BASED ON 40% MAX FILL RATIO)			
	UTP CAT6A (0.27" O.D.)	FIBER OPTIC (0.27" O.D.)	4#22 WEST PENN 240 (0.142" O.D.)	RG-6/U WEST PENN 841 (0.254" O.D.)
3/4"	3	3	11	3
1"	6	6	19	6
1 1/4"	10	10	30	9
1 1/2"	13	13	44	13
2"	22	22	78	24

FBA Engineering / Plot Date: 9/26/2023 11:12 AM / Plotted by: Steve Roth / Drawing Location: I:\535\050\TE001.dwg

DIGALERT
DIAL TOLL FREE 1-800-422-4133
AT LEAST TWO DAYS BEFORE YOU DIG
UNDERGROUND SERVICE ALERT OF SOUTHERN CALIFORNIA

BASIS OF BEARINGS:
BEARINGS SHOWN HEREON ARE BASED ON THE CENTERLINE OF 162 ND STREET (FORMERLY MARKET STREET) BEING N 89° 55' 30" E SHOWN ON TRACT NO. 10901, M.B. 254/31-32

BENCHMARK:
THE CITY OF GARDENA BENCHMARK NO. 5D-15 ELEV. = 43.508

CITY OF GARDENA · FREEWAY CITY · INCORPORATED 1930

CONSULTANT:
FBA Engineering
Consulting Electrical Engineers
150 Paularino Avenue Suite A120
Costa Mesa, CA 92626
949.852.9995 • 949.852.1657 (fax)
fbaengr.com
FBA Job Number: 535050

REGISTERED PROFESSIONAL ENGINEER · STEPHEN R. ... No. E 10372 · Exp. 09-30-24 · ELECTRICAL · STATE OF CALIFORNIA
05/01/2023

PREPARED UNDER THE SUPERVISION OF:
RJM DESIGN GROUP
31591 Camino Capistrano
San Juan Capistrano, CA 92675
www.RJMdesigngroup.com
[949] 493-2690 *fax*
[949] 493-2600 *phone*

LICENSED LANDSCAPE ARCHITECT · LARRY P. RYAN LICENSE NO. 2502 · Signature · 09/30/2023 Renewal Date · 9/26/2023 Date · STATE OF CALIFORNIA

REVISIONS

NO.	DESCRIPTION	DATE	APPROVED
1	90% CD SUBMITTAL	12/15/2022	
2	100% CD SUBMITTAL	05/01/2023	
3	FINAL SUBMITTAL	10/02/2023	

CITY OF GARDENA
DEPARTMENT OF PUBLIC WORKS - ENGINEERING
SYMBOLS LIST, GENERAL NOTES & SCHEDULES
COMMUNITY AQUATICS & SENIOR CENTER
TE-0.01

	INITAL	DATE
DESIGNED BY	SR	11/14/2022
DRAWN BY	SR	09/26/2023
CHECKED BY	BZ	09/28/2023

APPROVED BY:
DATE · DIRECTOR OF PUBLIC WORKS
SHT. 191 OF 195 · DWG. NO. 5-2606

FILE PATH: I:\535\050\TE001.DWG
PLOT TIME: 9/26/2023 11:12:20 AM

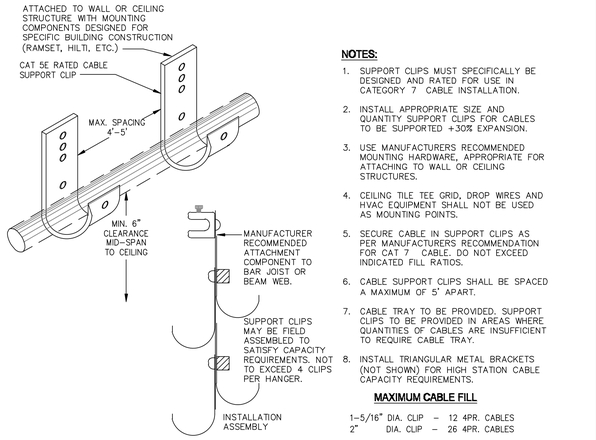

NOTES:

1. SUPPORT CLIPS MUST SPECIFICALLY BE DESIGNED AND RATED FOR USE IN CATEGORY 7 CABLE INSTALLATION.
2. INSTALL APPROPRIATE SIZE AND QUANTITY SUPPORT CLIPS FOR CABLES TO BE SUPPORTED +30% EXPANSION.
3. USE MANUFACTURERS RECOMMENDED MOUNTING HARDWARE, APPROPRIATE FOR ATTACHING TO WALL OR CEILING STRUCTURES.
4. CEILING TILE TEE GRID, DROP WIRES AND HVAC EQUIPMENT SHALL NOT BE USED AS MOUNTING POINTS.
5. SECURE CABLE IN SUPPORT CLIPS AS PER MANUFACTURERS RECOMMENDATION FOR CAT 7 CABLE. DO NOT EXCEED INDICATED FILL RATIOS.
6. CABLE SUPPORT CLIPS SHALL BE SPACED A MAXIMUM OF 5' APART.
7. CABLE TRAY TO BE PROVIDED. SUPPORT CLIPS TO BE PROVIDED IN AREAS WHERE QUANTITIES OF CABLES ARE INSUFFICIENT TO REQUIRE CABLE TRAY.
8. INSTALL TRIANGULAR METAL BRACKETS (NOT SHOWN) FOR HIGH STATION CABLE CAPACITY REQUIREMENTS.

MAXIMUM CABLE FILL

1-5/16" DIA. CLIP – 12 4PR. CABLES
2" DIA. CLIP – 26 4PR. CABLES

CABLE SUPPORT (J-HOOKS)

SCALE:	
NTS	3

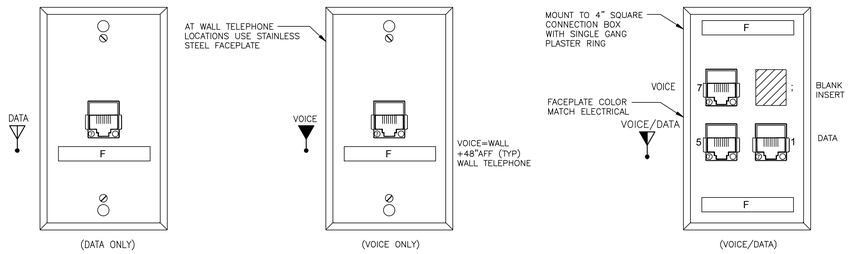

NOTE: 3-PORT OUTLET EXAMPLE IS SHOWN HEREIN. PROVIDE NUMBER OF PORTS SHOWN IN TELECOM PLANS

GENERAL NOTE: JACK COLOR SHALL MATCH CABLE COLOR SHOWN IN LOW VOLTAGE SYSTEMS CABLING MATRIX.

TYPICAL WALL OUTLET DETAILS

SCALE:	
NTS	2

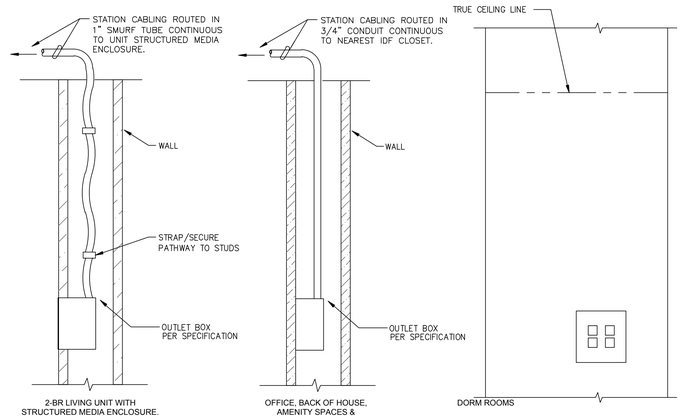

TELECOMMUNICATION OUTLET (FLUSH MOUNTED)

SCALE:	
NTS	1

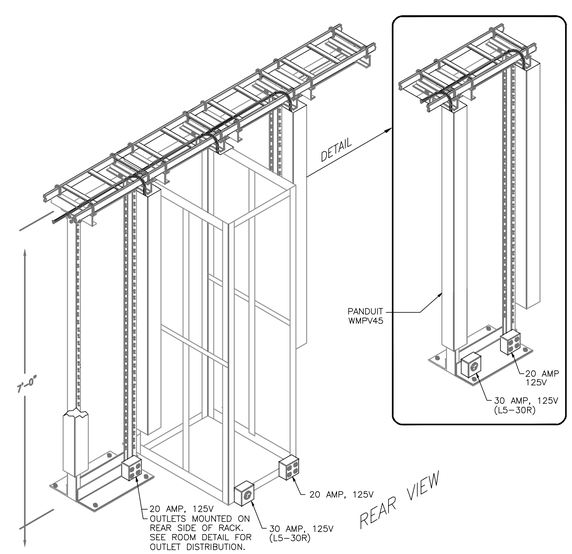

TYPICAL ELECTRICAL OUTLETS AT EQUIPMENT RACKS

SCALE:	
NTS	4

KEY NOTES:

1. UNDERGROUND SERVICE CONDUITS FROM PROPERTY LINE FOR SERVICE PROVIDER CABLING PER UTILITY COMPANY REQUIREMENTS, REFER TO E-1.01.
2. 3/4" CONDUIT WITH TELEPHONE CABLING AND TWO (2) RJ-31X-CONFIGURED JACKS AS REQUIRED, TO THE MAIN FIRE ALARM CONTROL PANEL.
3. 3/4" CONDUIT WITH TELEPHONE CABLING, STUBBED UP INTO THE ELEVATOR MACHINE ROOM FOR REQUIRED DEDICATED TELEPHONE SERVICE. COORDINATE WITH ELEVATOR INSTALLER FOR EXACT LOCATION OF STUB UP.
4. 3/4" CONDUIT WITH TELEPHONE CABLING AND JACK AS REQUIRED, TO THE TELEPHONE ENTRY/ACCESS CONTROL SYSTEM AT THE MAIN ENTRANCE TO THE FACILITY. COORDINATE WITH ARCHITECT/OWNER FOR EXACT LOCATION. TELEPHONE CONNECTION TO MAIN TELEPHONE BACKBOARD 'TB1'.
5. 3/4" CONDUIT WITH TELEPHONE CABLE AND JACK AS REQUIRED TO THE AREA OF REFUGE 2-WAY COMMUNICATION BASE SYSTEM STATION COORDINATE WITH ARCHITECT FOR EXACT LOCATIONS WHERE APPLICABLE.
6. MAIN TELECOM TERMINAL BACKBOARD 'TB1' LOCATED AT GROUND LEVEL. 'TB1' PROVIDES FOR LOW VOLTAGE UTILITY SERVICES MINIMUM POINT OF ENTRY (MPOE) AND PROVIDES DEDICATED TERMINATIONS/CABLING FOR SOURCING OF TELEPHONE AND CABLE TV DISTRIBUTION CABLE.
7. TELECOM TERMINAL BACKBOARD. SEE FLOOR PLAN 'TE' SHEETS. THE BACKBOARD LOCATIONS ARE DEDICATED UTILITY EQUIPMENT SPACES PROVIDING THE DESIGNATED FLOOR, OR AREA SERVING FACILITY FOR TERMINATION/CROSS-CONNECTION OF BACKBONE/TRUNK CABLING ROUTED FROM THE MAIN TELECOM ROOM TO THE FEEDER AND STATION CABLES FOR VOICE, DATA, AND CABLE TV SERVICES.
8. PROVIDE GROUND CONDUCTOR CONNECTIONS, AND EQUIPMENT GROUND BONDING CONNECTIONS TO SUPPORT THE INSTALLATION OF SIGNAL PROCESSING/DATA COM EQUIPMENT, TYPICAL FOR MPOE ROOM AND ALL TELECOM CLOSET BACKBOARDS.
9. PROVIDE ALL CABLING, CONNECTORS, AND CONNECTING HARDWARE FOR TELEPHONE / VOICE COMMUNICATIONS PER OWNER REQUIREMENTS.
10. PROVIDE ALL CABLING, CONNECTORS, AND CONNECTING HARDWARE FOR DATA COMMUNICATIONS AND NETWORKING PER OWNER REQUIREMENTS.
11. PROVIDE ALL CABLING, CONNECTORS, AND CONNECTING HARDWARE FOR BROADBAND CABLE TELEVISION PER OWNER AND ACCESS PROVIDER REQUIREMENTS. ALLOW SPACE ON BACKBOARD FOR FUTURE CONNECTIONS AT BACKBOARD EQUIPMENT FOR SATELLITE TELEVISION EQUIPMENT.
12. ALL ACTIVE EQUIPMENT, INCLUDING POWER SUPPLIES, SIGNAL PROCESSING DEVICES, BROADBAND/RF/AUDIO AMPLIFIERS, COMPUTERS AND DATA NETWORKING DEVICES, TELEPHONE SWITCHING DEVICES, ETC., SHALL BE PROVIDED BY OTHERS.
13. 3/4" CONDUIT WITH TELEPHONE CABLING, ROUTED TO SECURITY SYSTEM CONTROL PANEL FOR REQUIRED DEDICATED TELECOM/BUILDING SYSTEMS CONNECTIVITY.
14. "MDF" SHALL BE A FLOOR-STANDING DATA EQUIPMENT RACK: CHATSWORTH STANDARD RACK 55053 OR APPROVED EQUAL, 19"W X 84"H X 3'D, WITH ALL ACCESSORIES PROVIDED FOR A COMPLETE AND OPERABLE SYSTEM. PROVIDE FIBER OPTIC TERMINAL PANELS, CAT6A PATCH PANELS, HORIZONTAL AND VERTICAL CABLE MANAGEMENT, SURGE SUPPRESSOR/PLUG STRIPS, GROUNDING/BONDING ACCESSORIES, AND LABELING AS REQUIRED BY OWNER. ALL ACTIVE EQUIPMENT, INCLUDING POWER SUPPLIES, SIGNAL PROCESSING DEVICES, BROADBAND/RF/AUDIO AMPLIFIERS, COMPUTERS AND DATA NETWORKING DEVICES, TELEPHONE SWITCHING DEVICES, ETC., SHALL BE PROVIDED BY OTHERS.
15. OUTLETS FOR VOICE AND DATA INCLUDING CAT6A MODULAR JACKS/FACEPLATE ON A RECESSED OUTLET BOX WITH STAR-CONFIGURED 4-PAIR CAT7 STATION COPPER CABLING TO THE BUILDING'S TELECOM TERMINAL BACKBOARD. SEE FLOOR PLANS FOR LOCATIONS/QUANTITIES.
16. OUTLETS FOR CABLE TV AND SATELLITE TV INCLUDING DOUBLE-RG-6 MODULAR JACKS/FACEPLATE ON A RECESSED OUTLET BOX WITH TWO (2) STAR-CONFIGURED 75-OHM RG-6 PVC-JACKETED COAXIAL STATION CABLES PER CATV AND SATELLITE/DTV SERVICE PROVIDER SPECIFICATIONS (TO THE BUILDING'S TELECOM TERMINAL BACKBOARD) AND UNDERGROUND RG-11 TRUNK COAXIAL CABLE PER SERVICE PROVIDER REQUIREMENTS. SEE FLOOR PLANS FOR LOCATIONS/QUANTITIES.
17. CONDUIT PROVIDED BY ELECTRICAL CONTRACTOR, REFER TO NOTE #5 ON E-1.01 FOR SIZES AND QUANTITIES.
18. (1) 2"C.O.(FUTURE DISH CABLING) AND 3/4"C.O. FOR DISH GROUND CONDUCTORS. PROVIDE CONDUITS WITH PULL ROPES.
19. 12" x 12" X 6"D. WEATHERPROOF PULL BOX WITH 2" SERVICE HEAD STUBBED OUT OF WALL FOR FUTURE DISH ANTENNA.
20. PROVIDE CONDUIT SLEEVES BETWEEN FLOORS FOR ACCESS CONTROL SYSTEM CONDUCTOR PATHWAYS. WHERE FLOOR IS RATED, PROVIDE FIRESTOP SYSTEM ASSEMBLY WITH RATING EQUAL TO OR GREATER THAN PENETRATED STRUCTURE FOR A UL LISTED PENETRATION SYSTEM. (STI EZ-PATH OR APPROVED EQUAL).
21. CONDUIT PROVIDED BY ELECTRICAL CONTRACTOR, REFER TO NOTE #8 ON E-3.01 FOR SIZES AND QUANTITIES.
22. UNDERGROUND ACCESS CONTROL SYSTEM CONDUIT AND SYSTEM CONDUCTORS PER MANUFACTURER'S RECOMMENDATIONS FROM ACCESS CONTROL PANEL LOCATION TO OTHER SITE BUILDING STRUCTURES. CONDUIT SIZE, ROUTING PER SITE PLAN DRAWINGS. CABLING TO BE PROVIDED IN A "STAR TOPOLOGY" CONFIGURATION. ROUTING OF SYSTEM CONDUCTORS' DAISY CHAINED THROUGH BUILDINGS IS NOT ACCEPTABLE.
23. TYPICAL PULLBOX, IF REQUIRED. PROVIDE SERVICE LOOP IN ALL CABLES.

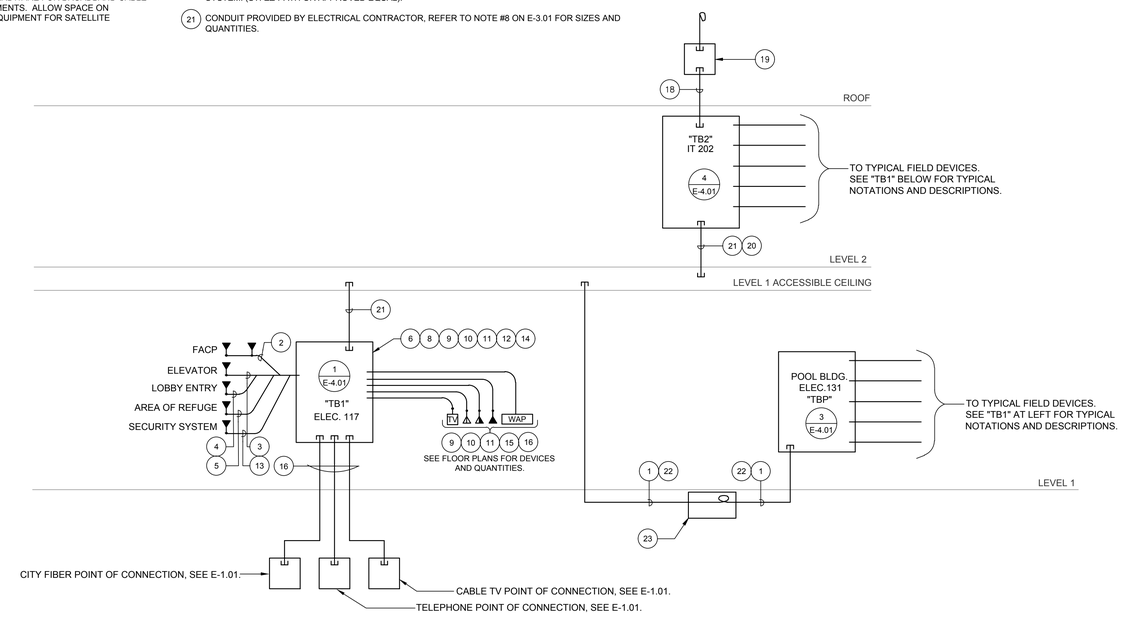

TELECOM. RISER DIAGRAM

SCALE: NONE	1

DIGALERT
DIAL TOLL FREE 1-800-422-4133
AT LEAST TWO DAYS BEFORE YOU DIG
UNDERGROUND SERVICE ALERT OF SOUTHERN CALIFORNIA

BASIS OF BEARINGS:

BEARINGS SHOWN HEREON ARE BASED ON THE CENTERLINE OF 162 ND STREET (FORMERLY MARKET STREET) BEING N 89° 55' 30" E SHOWN ON TRACT NO. 10901, M.B. 254/31-32

BENCHMARK:

THE CITY OF GARDENA BENCHMARK NO. 5D-15 ELEV. = 43.508

CONSULTANT:

FBA Engineering
Consulting Electrical Engineers
150 Paularino Avenue Suite A120
Costa Mesa, CA 92626
949.852.9995 • 949.852.1657 (fax)
fbaengr.com
FBA Job Number: 535050

REGISTERED PROFESSIONAL ENGINEER 10372 EXP. 09-30-24 ELECTRICAL STATE OF CALIFORNIA
05/01/2023

PREPARED UNDER THE SUPERVISION OF:

RJM DESIGN GROUP
31591 Camino Capistrano
San Juan Capistrano, CA 92675
www.RJMdesigngroup.com
[949) 493-2690 fax
[949) 493-2600 phone

LICENSED LANDSCAPE ARCHITECT — Signature 09/30/2023 — 5/30/2025 — STATE OF CALIFORNIA

REVISIONS			
NO.	DESCRIPTION	DATE	APPROVED
1	90% CD SUBMITTAL	12/15/2022	
2	100% CD SUBMITTAL	05/01/2023	
3	FINAL SUBMITTAL	10/02/2023	

CITY OF GARDENA
DEPARTMENT OF PUBLIC WORKS - ENGINEERING
TELECOM. RISER DIAGRAM
COMMUNITY AQUATICS & SENIOR CENTER
TE-0.02

	INITAL	DATE
DESIGNED BY	SR	11/14/2022
DRAWN BY	SR	09/26/2023
CHECKED BY	BZ	09/28/2023

APPROVED BY:
DATE
DIRECTOR OF PUBLIC WORKS
SHT. 192 OF 195 DWG. NO. 5-2606

FBA Engineering / Plot Date: 9/26/2023 11:12 AM / Plotted by: Steve Roth / Drawing Location: I:\535\050\TE002.dwg
RE PATH: I:\535\050\ 09002.PWG
PCIT TIME: 9/26/2023 11:12:22 AM

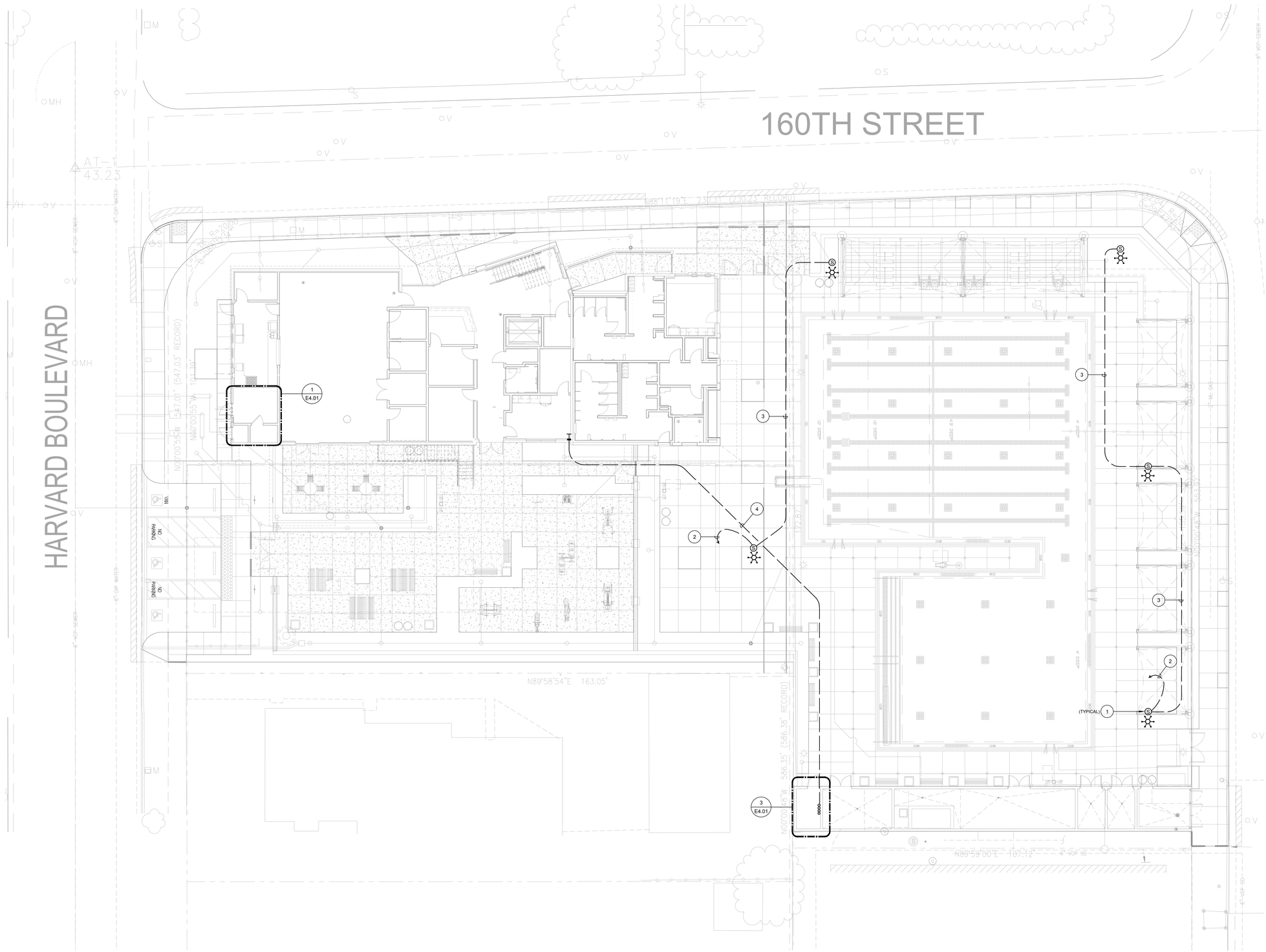

PLAN NOTES

1. 4S WEATHERPROOF J-BOX AT BASE OF TREE FOR SPEAKER CABLING. SEE DETAIL 3/E-4.01. J-BOX PROVIDED AND INSTALLED BY ELECTRICAL CONTRACTOR, REFER TO E-1.01.
2. 1"C. (SPEAKER CABLING) TO TEL. BACKBOARD "TBP" IN POOL BUILDING. CONDUIT PROVIDED AND INSTALLED BY ELECTRICAL CONTRACTOR, REFER TO E-1.01.
3. 3/4"C. (SPEAKER CABLING). CONDUIT PROVIDED AND INSTALLED BY ELECTRICAL CONTRACTOR, REFER TO E-1.01.
4. CONDUIT PROVIDED BY ELECTRICAL CONTRACTOR, REFER TO NOTE #5 ON E-1.01 FOR SIZES AND QUANTITIES.

SITE PLAN GENERAL NOTES:

1. LOCATIONS OF EXISTING UTILITIES ARE NOT SHOWN AND CONTRACTOR SHALL EXERCISE EXTREME CAUTION IN EXCAVATING AND TRENCHING ON THIS SITE TO AVOID EXISTING DUCTS, PIPING, OR CONDUITS, ETC., AND TO PREVENT HAZARDS TO PERSONNEL AND/OR DAMAGE TO EXISTING UNDERGROUND UTILITIES OR STRUCTURES WHETHER OR NOT SHOWN AND INSTALLED BY ANY OTHER CONTRACTS. THE ENGINEER IS NOT RESPONSIBLE FOR THE LOCATION OF UNDERGROUND UTILITIES OR STRUCTURES, WHETHER OR NOT SHOWN OR DETAILED AND INSTALLED BY ANY OTHER CONTRACTS. THE CONTRACTOR SHALL IMMEDIATELY NOTIFY THE ENGINEER, THE ENGINEER SHOULD SEARCH UNIDENTIFIED CONDITIONS BE DISCOVERED. THESE DRAWINGS AND SPECIFICATIONS DO NOT INCLUDE THE NECESSARY ELEMENTS FOR CONSTRUCTION SAFETY.
2. CONTRACTOR SHALL VERIFY THE LOCATION OF ANY EXISTING UNDERGROUND UTILITIES AND STRUCTURES PRIOR TO COMMENCEMENT OF WORK BY CONTACTING UNDERGROUND SERVICE ALERT (U.S.A.) AT 1(800) 422-4133, OR OTHER LOCAL APPLICABLE UNDERGROUND SERVICE ALERT AGENCIES.
3. THE DRAWINGS ILLUSTRATE LOCATIONS OF EQUIPMENT AND ASSEMBLIES, PULLBOXES, MANHOLES, HANDHOLES, AND VAULTS, INCLUDING OTHER ELECTRICAL UNDERGROUND STRUCTURES AND PATHWAYS. CONTRACTOR SHALL CLOSELY COORDINATE EXACT LOCATIONS AND MOUNTING DEPTHS OF ALL DEVICES, STRUCTURES AND PATHWAYS WITH OTHER TRADES PRIOR TO PLACEMENT, TO ENSURE FINAL LOCATIONS ARE OUTSIDE FEATURE LANDSCAPE AND ARCHITECTURAL AREAS AND ARE NOT IN CONFLICT WITH THE INSTALLATION OF MATERIALS BY OTHER TRADES.
4. SEE ARCHITECTURAL, CIVIL AND LANDSCAPE PLANS FOR EXACT LOCATION OF FIXTURES, PULLBOXES, MANHOLES, OTHER ELECTRICAL EQUIPMENT AND DEVICES, ETC. COORDINATE ALL UNDERGROUND STRUCTURES AND CONDUIT ROUTING WITH ARCHITECT OR OWNERS' REPRESENTATIVE PRIOR TO ROUGH-IN, TO ENSURE SUCH ITEMS ARE NOT PLACED IN PLANTING / HARDSCAPE AREAS.
5. ALL EQUIPMENT LOCATED OUTDOORS SHALL BE WEATHERPROOF, NEMA 3R RATED.
6. PROVIDE PULL STRING IN ALL EMPTY CONDUITS.

SITE TELECOM PLAN | SCALE: 3/32"=1'-0" | 1

DIGALERT
DIAL TOLL FREE
1-800-422-4133
AT LEAST TWO DAYS BEFORE YOU DIG
UNDERGROUND SERVICE ALERT OF SOUTHERN CALIFORNIA

BASIS OF BEARINGS:
BEARINGS SHOWN HEREON ARE BASED ON THE CENTERLINE OF 162 ND STREET (FORMERLY MARKET STREET) BEING N 89° 55' 30" E SHOWN ON TRACT NO. 10901, M.B. 254/31-32

BENCHMARK:
THE CITY OF GARDENA BENCHMARK NO. 5D-15 ELEV. = 43.508

CONSULTANT:
FBA Engineering
Consulting Electrical Engineers
150 Pausatino Avenue Suite A120
Costa Mesa, CA 92626
949.852.9995 • 949.852.1657 (fax)
fbaengr.com
FBA Job Number: 535050

REGISTERED PROFESSIONAL ENGINEER No. 10372 Exp. 09-30-24 ELECTRICAL STATE OF CALIFORNIA
05/01/2023

PREPARED UNDER THE SUPERVISION OF:
RJM DESIGN GROUP
31591 Camino Capistrano
San Juan Capistrano, CA 92675
www.RJMdesigngroup.com
[949] 493-2650 fax
[949] 493-2600 phone

LICENSED LANDSCAPE ARCHITECT Signature 09-30-2023 Renewal Date STATE OF CALIFORNIA

REVISIONS			
NO.	DESCRIPTION	DATE	APPROVED
1	90% CD SUBMITTAL	12/15/2022	
2	100% CD SUBMITTAL	05/01/2023	
3	FINAL SUBMITTAL	10/02/2023	

CITY OF GARDENA
DEPARTMENT OF PUBLIC WORKS - ENGINEERING
SITE TELECOM PLAN
COMMUNITY AQUATICS & SENIOR CENTER
TE-1.01

	INITAL	DATE
DESIGNED BY	SR	11/14/2022
DRAWN BY	SR	09/26/2023
CHECKED BY	BZ	09/28/2023

APPROVED BY:
DATE
DIRECTOR OF PUBLIC WORKS
SHT. 193 OF 195 DWG. NO. 5-2606

FBA Engineering / Plot Date: 9/26/2023 11:12 AM / Plotted by: Steve Roth / Drawing Location: I:\535\050\TE101.dwg
XREF PATH: I:\535\050\TE01.DWG
PLOT TIME: 9/26/2023 11:12:28 AM

KEY NOTES

1. (1) 2"C. (TELECOM.) & (3) 2"C.O. (ACCESS, SECURITY & CCTV) PROVIDED AND INSTALLED BY ELECTRICAL CONTRACTOR, SEE E-3.01.
2. LOW VOLTAGE CONDUIT TO POOL BUILDING PROVIDED AND INSTALLED BY ELECTRICAL CONTRACTOR, REFER TO NOTE #5 ON E-1.01 FOR QUANTITIES, SIZE AND CONTINUATION.

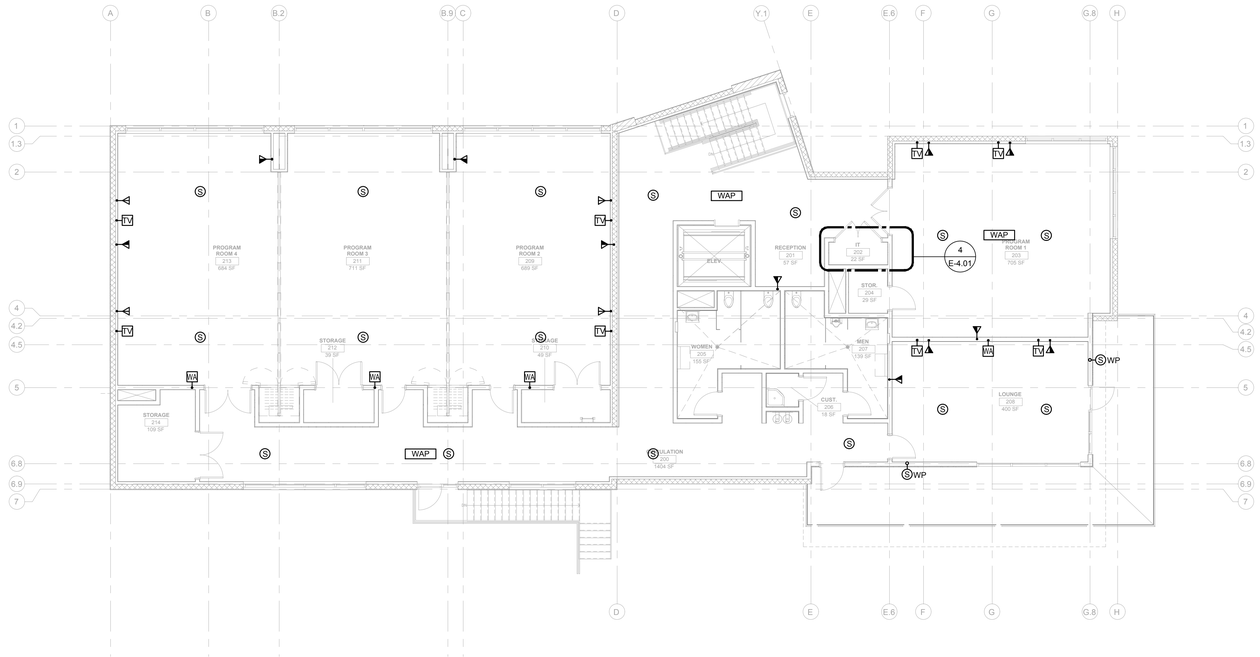

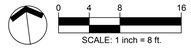

BUILDING SECOND FLOOR TELECOM PLAN — SCALE: 1/8"=1'-0" — 2

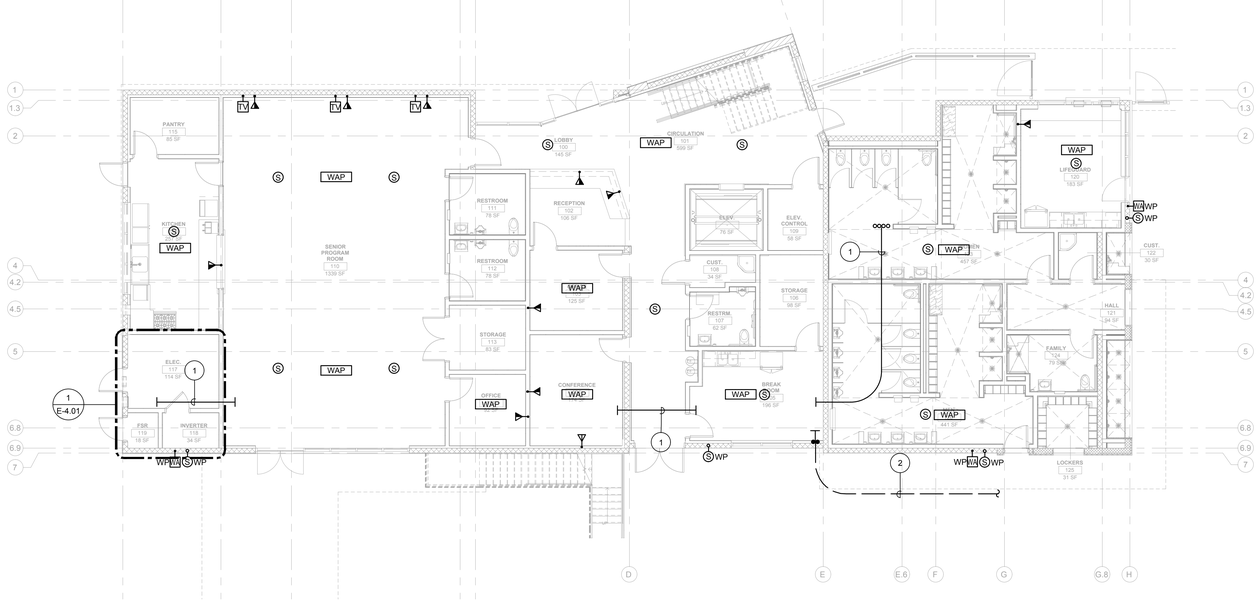

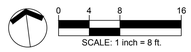

BUILDING FIRST FLOOR TELECOM PLAN — SCALE: 1/8"=1'-0" — 1

TELECOM GENERAL NOTES:

1. ALL WALL MOUNTED DEVICE HEIGHTS SHALL BE VERIFIED WITH ARCHITECTURAL ROOM ELEVATIONS PRIOR TO ROUGH-IN.
2. PENETRATIONS THROUGH FIRE RATED WALLS SHALL BE PROTECTED WITH AN APPROVED FIRE STOP SYSTEM EQUAL TO OR GREATER THAN THE RATING OF THE WALL BEING PENETRATED.
3. ALL DEVICES MOUNTED BACK-TO-BACK ON COMMON WALLS SHALL BE INSTALLED IN SEPARATE BOXES OFFSET 24-INCHES MINIMUM OR PROVIDED WITH PUTTY OR ANOTHER APPROVED SOUNDPROOF BACKING.
4. WHEN EXPOSED CEILING OR OPEN GRID CONDITIONS EXIST, CONTRACTOR SHALL PROVIDE:
   - A. ALL CONDUITS SHALL BE ROUTED PARALLEL TO BUILDING STRUCTURES AND RACKED NEATLY IN GROUPS OF MULTIPLE PATHWAYS.
   - B. ALL LOW VOLTAGE CABLES SHALL BE:
     1) INSTALLED IN EMT CONDUIT PATHWAYS OR INSTALLED NEATLY IN CABLE MANAGEMENT OPEN BASKET OR LADDER TYPWIREWAY SUPPORTED INDEPENDENTLY FROM STRUCTURE ABOVE.

   EXPOSED LOW VOLTAGE CABLING IN OPEN TYPE CEILING APPLICATIONS INSTALLED ON D-RINGS, J-HOOKS OR SIMILAR APPARATUS WILL NOT BE ACCEPTED UNLESS APPROVED IN WRITING BY ARCHITECT/OWNER PRIOR TO ANY ROUGH-IN OR INSTALLATION. CONTRACTOR SHALL INCLUDE AN ALLOWANCE IN HIS BASE BID FOR THE INSTALLATION OF LOW VOLTAGE CABLES IN OPEN CEILING AS DESCRIBED.
5. EXPOSED CABLE/CONDUCTORS INSTALLED IN A PLENUM SPACE SHALL BE LISTED FOR SUCH ENVIRONMENT AND INSTALLATION SHALL CONFORM TO NEC OR CEC WHERE ADOPTED ARTICLE 300.22(C).
6. COORDINATE LOCATION OF ALL TELECOM DEVICE LOCATIONS WITH ARCHITECT PRIOR TO ROUGH-IN.
7. ALL TELECOM DEVICE OUTLET BOXES AND CONDUIT SHALL BE PROVIDED AND INSTALLED BY ELECTRICAL CONTRACTOR, REFER TO E-3.01.

DIGALERT
DIAL TOLL FREE 1-800-422-4133
AT LEAST TWO DAYS BEFORE YOU DIG
UNDERGROUND SERVICE ALERT OF SOUTHERN CALIFORNIA

BASIS OF BEARINGS:

BEARINGS SHOWN HEREON ARE BASED ON THE CENTERLINE OF 162 ND STREET (FORMERLY MARKET STREET) BEING N 89° 55' 30" E SHOWN ON TRACT NO. 10901, M.B. 254/31-32

BENCHMARK:

THE CITY OF GARDENA BENCHMARK NO. 5D-15 ELEV. = 43.508

CONSULTANT:

FBA Engineering
Consulting Electrical Engineers
150 Paularino Avenue Suite A120
Costa Mesa, CA 92626
949.852.9995 • 949.852.1657 (fax)
fbaengr.com
FBA Job Number: 535050

REGISTERED PROFESSIONAL ENGINEER — No. 10372 — EXP. 09-30-24 — ELECTRICAL — STATE OF CALIFORNIA

05/01/2023

PREPARED UNDER THE SUPERVISION OF:

RJM DESIGN GROUP
31591 Camino Capistrano
San Juan Capistrano, CA 92675
www.RJMdesigngroup.com
[949] 493-2690 fax
[949] 493-2600 phone

LICENSED LANDSCAPE ARCHITECT — Signature — 05/26/2023 — Expiration Date: 1-31-2025 — STATE OF CALIFORNIA

REVISIONS			
NO.	DESCRIPTION	DATE	APPROVED
1	90% CD SUBMITTAL	12/15/2022	
2	100% CD SUBMITTAL	05/01/2023	
3	FINAL SUBMITTAL	10/02/2023	

CITY OF GARDENA
DEPARTMENT OF PUBLIC WORKS - ENGINEERING

BUILDING TELECOM PLANS

COMMUNITY AQUATICS & SENIOR CENTER
TE-3.01

	INITAL	DATE	APPROVED BY:
DESIGNED BY	SR	11/14/2022	
DRAWN BY	SR	09/26/2023	DATE — DIRECTOR OF PUBLIC WORKS
CHECKED BY	RZ	09/28/2023	

SHT. 194 OF 195 — DWG. NO. 5-2606

FBA Engineering / Plot Date: 9/26/2023 11:12 AM / Plotted by: Steve Roth / Drawing Location: I:\535\050\TE301.dwg

REF FILES: I:\535\050\TE01.DWG
PLOT TIME: 9/26/2023 11:12:29 AM

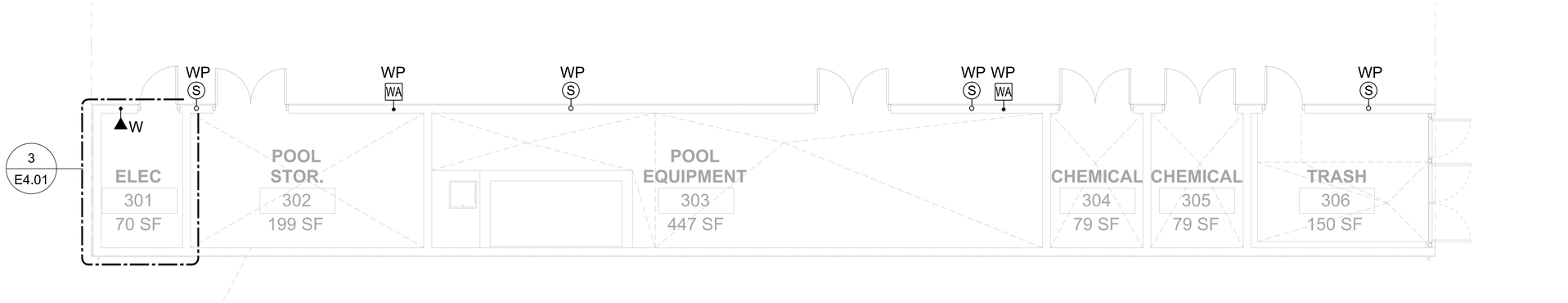

0 2 4 8
SCALE: 1 inch = 4 ft.

POOL BUILDING TELECOM PLAN | SCALE: 1/4"=1'-0" | 1

TELECOM GENERAL NOTES:

1. ALL WALL MOUNTED DEVICE HEIGHTS SHALL BE VERIFIED WITH ARCHITECTURAL ROOM ELEVATIONS PRIOR TO ROUGH-IN.
2. PENETRATIONS THROUGH FIRE RATED WALLS SHALL BE PROTECTED WITH AN APPROVED FIRE STOP SYSTEM EQUAL TO OR GREATER THAN THE RATING OF THE WALL BEING PENETRATED.
3. ALL DEVICES MOUNTED BACK-TO-BACK ON COMMON WALLS SHALL BE INSTALLED IN SEPARATE BOXES OFFSET 24-INCHES MINIMUM OR PROVIDED WITH PUTTY OR ANOTHER APPROVED SOUNDPROOF BACKING.
4. WHEN EXPOSED CEILING OR OPEN GRID CONDITIONS EXIST, CONTRACTOR SHALL PROVIDE:
   A. ALL CONDUITS SHALL BE ROUTED PARALLEL TO BUILDING STRUCTURES AND RACKED NEATLY IN GROUPS OF MULTIPLE PATHWAYS.
   B. ALL LOW VOLTAGE CABLES SHALL BE:
      1) INSTALLED IN EMT CONDUIT PATHWAYS OR INSTALLED NEATLY IN CABLE MANAGEMENT OPEN BASKET OR LADDER TYPWIREWAY SUPPORTED INDEPENDENTLY FROM STRUCTURE ABOVE.

   EXPOSED LOW VOLTAGE CABLING IN OPEN TYPE CEILING APPLICATIONS INSTALLED ON D-RINGS, J-HOOKS OR SIMILAR APPARATUS WILL NOT BE ACCEPTED UNLESS APPROVED IN WRITING BY ARCHITECT/OWNER PRIOR TO ANY ROUGH-IN OR INSTALLATION. CONTRACTOR SHALL INCLUDE AN ALLOWANCE IN HIS BASE BID FOR THE INSTALLATION OF LOW VOLTAGE CABLES IN OPEN CEILING AS DESCRIBED.
5. EXPOSED CABLE/CONDUCTORS INSTALLED IN A PLENUM SPACE SHALL BE LISTED FOR SUCH ENVIRONMENT AND INSTALLATION SHALL CONFORM TO NEC OR CEC WHERE ADOPTED ARTICLE 300.22(C).
6. COORDINATE LOCATION OF ALL TELECOM DEVICE LOCATIONS WITH ARCHITECT PRIOR TO ROUGH-IN.
7. ALL TELECOM DEVICE OUTLET BOXES AND CONDUIT SHALL BE PROVIDED AND INSTALLED BY ELECTRICAL CONTRACTOR, REFER TO E-3.01.

DIGALERT
DIAL TOLL FREE
1-800-422-4133
AT LEAST TWO DAYS BEFORE YOU DIG
UNDERGROUND SERVICE ALERT OF SOUTHERN CALIFORNIA

BASIS OF BEARINGS:
BEARINGS SHOWN HEREON ARE BASED ON THE CENTERLINE OF 162 ND STREET (FORMERLY MARKET STREET) BEING N 89° 55' 30" E SHOWN ON TRACT NO. 10901, M.B. 254/31-32

BENCHMARK:
THE CITY OF GARDENA BENCHMARK NO. 5D-15 ELEV. = 43.508

CITY OF GARDENA
FREEWAY CITY
INCORPORATED 1930

CONSULTANT:
FBA Engineering
Consulting Electrical Engineers
150 Paularino Avenue Suite A120
Costa Mesa, CA 92626
949.852.9995 • 949.852.1657 (fax)
fbaengr.com
FBA Job Number: 535050

REGISTERED PROFESSIONAL ENGINEER
STEVE ROTH
No. 10372
Exp. 09-30-24
ELECTRICAL
STATE OF CALIFORNIA
05/01/2023

PREPARED UNDER THE SUPERVISION OF:
RJM DESIGN GROUP
31591 Camino Capistrano
San Juan Capistrano, CA 92675
www.RJMdesigngroup.com
[949] 493-2690 fax
[949] 493-2600 phone

LICENSED LANDSCAPE ARCHITECT
LARRY W. WILLIAMSON
Signature
05/26/2023
Date
5/26/2023
Exp. Date
STATE OF CALIFORNIA

REVISIONS

NO.	DESCRIPTION	DATE	APPROVED
1	90% CD SUBMITTAL	12/15/2022	
2	100% CD SUBMITTAL	05/01/2023	
3	FINAL SUBMITTAL	10/02/2023	

CITY OF GARDENA
DEPARTMENT OF PUBLIC WORKS - ENGINEERING
POOL BUILDING TELECOM PLAN
COMMUNITY AQUATICS & SENIOR CENTER
TE-3.03

	INITIAL	DATE
DESIGNED BY	SR	11/14/2022
DRAWN BY	SR	09/26/2023
CHECKED BY	BZ	09/28/2023

APPROVED BY:
DATE
DIRECTOR OF PUBLIC WORKS
SHT. 195 OF 195
DWG. NO. 5-2606

FBA Engineering / Plot Date: 9/26/2023 11:12 AM / Plotted by: Steve Roth / Drawing Location: I:\535\050\TE303.dwg

FILE PATH: I:\535\050\TE303.DWG
PLOT DATE: 9/26/2023 11:12:37 AM

CITY OF GARDENA

CONTRACT DOCUMENTS AND SPECIFICATIONS

FOR

GARDENA COMMUNITY AQUATIC AND SENIOR CENTER

PROJECT NO. JN 978

OCTOBER 2023

CITY OF GARDENA

CONTRACT DOCUMENTS AND SPECIFICATIONS

FOR

GARDENA COMMUNITY AQUATIC AND SENIOR CENTER

PROJECT NO. JN 978

Plans & Specifications prepared by:

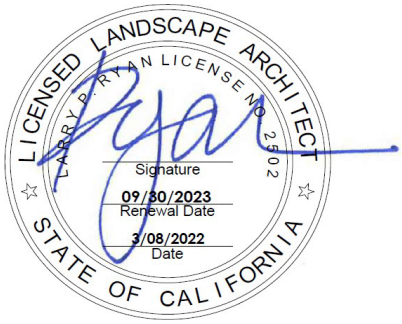

Memoranda:

Plans and specifications are available at Planwell Administrator, 562.436.9761 or https://www.e-arc.com/location/costa-mesa/ (Go to Planrooms/Order From Planwell/Public Planroom and select City of Gardena under pulldown menu)

Bid Results: https://www.cityofgardena.org/public-contracts/

City of Gardena Public Works Engineering Division: 310.217.9568

Owner
CITY OF GARDENA
Public Works Department
1717 W 162nd St,
Gardena, CA 90247

Landscape Architect
RJM DESIGN GROUP
31591 Camino Capistrano
San Juan Capistrano, CA 92675
(949) 493-2600

Architect
SVA ARCHITECTS
6 Hutton Centre Drive, Suite 1150
Santa Ana, CA 92707
(949) 809-3380

Civil Engineer
CIVTEC
999 Corporate Drive, Suite 100
Ladera Ranch, CA 92694
(949) 463-8822

Pool Design
JONES & MADHAVAN
100 Thousand Oaks Blvd #211
Thousand Oaks, CA 91360
(805) 777-8449

Irrigation Design
GLASIR DESIGN
424 New Jersey Lane
Placentia, CA 92870
(714) 514-9930

Electrical Engineer
FBA ENGINEERING
150 Paularino Avenue, Suite A120
Costa Mesa, CA 92626
(949) 852-9995

Geotechnical Engineer
SOUTHERN CALIFORNIA GEOTECHNICAL
22285 E. Savi Ranch Parkway, Suite E
Yorba Linda, CA 92887
(714) 685-1118

CITY OF GARDENA
NOTICE INVITING BIDS
for
GARDENA COMMUNITY AQUATIC AND SENIOR CENTER
PROJECT NO. 978

Plans and Specifications are available through ARC Document Solutions. Please be advised that there is an additional charge for delivery. Upon payment of the purchase price, they become the property of the purchaser and may not be returned for refund.

You may access the plans through the following website under Public Planroom:

https://www.e-arc.com/location/costa-mesa/
(Scroll down to "Planrooms"/"Order From PlanWell"/"Public Planroom")

For help accessing and ordering, please contact a Planwell Administrator at 562.436.9761.

Notice is hereby given that the City of Gardena will receive sealed bids at the office of the City Clerk, City Hall, 1700 W. 162nd Street, Gardena, California, until **10:00 a.m.** on **November 21, 2023,** and shortly thereafter on this same day, they will be publicly opened and read in the City Clerk's Office in-person and via ZOOM.

The information to join the bid opening via ZOOM is the following:

Topic: Bid Opening
Time: 10:00 AM on November 21, 2023 (Shortly thereafter the deadline)
Join ZOOM Meeting

[https://us02web.zoom.us/j/86855775579]
Meeting ID: 868 5577 5579
Dial by phone: [+1 669 444 9171]US

Should you have any questions or concern in delivering a bid or joining the ZOOM Meeting, please contact City Clerk's office at (310) 217-9565 or via email at cityclerk@cityofgardena.org.

All bids must be in writing, must be sealed, and must be plainly marked on the outside: **"BID ON PROJECT NO. 978.** Any bid received after the hour stated above for any reason whatsoever, will not be considered for any purpose but will be returned unopened to the bidder.

Bids are required for the entire work as described below:

Contractor shall provide all labor, materials, equipment and incidentals as specified and required for the construction of a new aquatics and senior center building that includes a lobby and reception area, staff offices, conference room, break room, senior program room, kitchen and pantry, storage, electrical room, lifeguard room, men and women's restrooms with showers and lockers, custodial rooms, program rooms, lounge, balcony, elevator, and pool equipment/storage/trash building, telecommunication/AV & security system and photovoltaic system as shown on plans. Construction of a new recreation swimming pool, pool deck, piping, equipment and finishes as shown on plans. New shade structures, bleacher seating, perimeter walls, low walls, barbeque grill, site hardscape paving, ADA parking lot, fencing, gates, outdoor fitness equipment, site furnishings, site lighting, tree and shrub plantings, irrigation, and all other items as required to provide a completely operational facility.

The Request for Information (RFI) deadline is 12:00 p.m. on Monday, November 6, 2023

ENGINEER'S ESTIMATE: $14,500,000

The time of completion of contract shall be **260 working days** as defined in the latest Standard Specifications for Public Works ("Greenbook"). Liquidated Damages, as defined in Section 6-9, shall be **$3,000 per each consecutive calendar day.**

The City intends to issue a Notice to Proceed on or before February 5, 2024. Below is the project tentative schedule for your reference, however they are subject to change:

December 12, 2023	City Council award of Contract to Lowest Responsible Bidder
By December 14, 2023	City to email Contract Document to Awarded Contractor
By January 12, 2024	Contractor to Execute and Return Contract Documents to the City
By January 19, 2024	To Schedule Preconstruction Meeting
TBD	Preconstruction Meeting
By February 5, 2024	Notice to Proceed/Start Construction

Each bidder must submit a proposal to the City, c/o City Clerk in accordance with the Plans and Specifications. Said proposal is to be accompanied by a cash deposit, a certified or cashier's check, or a bidder's bond, made payable to the City of Gardena, in an amount not less than 10 percent of the total bid submitted.

The envelope enclosing the proposal shall be sealed and addressed to the City of Gardena c/o City Clerk, and delivered or mailed to the City at 1700 W. 162nd Street, Gardena, California 90247-3778. The envelope shall be plainly marked in the upper left-hand corner as follows:

ATTENTION: CITY, c/o CITY CLERK
(Bidder's Name and Address) _____

(Number and title of this project) _____

The successful bidder will be required to furnish a faithful performance bond in the amount of 100 percent of the contract price, and a payment bond in the amount of 100 percent of the contract price, both in a form satisfactory to the City Attorney.

The contractor shall have an active Class 'A or B' license from the Contractor's State License Board at the time of submitting bid. The self-performance requirement for the prime/general contractor has been eliminated, therefore there is no minimum requirement.

Pursuant to Public Contract Code Section 22300, the Contractor may, at Contractor's sole cost and expense, substitute securities equivalent to any monies withheld by the City to insured performance under the contract unless applicable federal regulations or policies do not allow such substitution. Such security shall be deposited with the City, or a state or federally chartered bank as escrow agent, who shall pay such monies to the Contractor upon satisfactory completion of the Contract. The Contractor shall be the beneficial owner of any security substituted for monies withheld and shall receive any accrued interest thereon. Securities eligible for investment shall include those listed in Government Code Section 16430 or bank or

savings and loan certificates of deposit. No such substitution shall be accepted until the escrow agreement, letter of credit, form of security and any other document related to said substitution is reviewed and found acceptable by the City Attorney.

The City reserves the right to reject any or all bids and to waive any informality or irregularity in any bid received and to be the sole judge of the merits of the respective bids received. The award, if made, will be made to the lowest responsive responsible bidder.

Bidders are advised that this Project is a public work for purposes of the California Labor Code, which requires payment of prevailing wages. Accordingly, the bidder awarded the Contract and all subcontractors shall be required to pay not less than the prevailing rate of per diem wages, as determined by the Director of the California Department of Industrial Relations, and otherwise comply with the provisions of Section 1770 et seq. of the California Labor Code, California Code of Regulations, Title 8, Section 16000 et seq., and any other applicable laws, rules and regulations adopted with respect thereto ("California Prevailing Wage Laws").

Attention is directed to the provisions of Sections 1777.5 and 1777.6 of the Labor Code concerning the employment of apprentices by Contractor or any Subcontractor under it. Contractor and any Subcontractor under if shall comply with the requirements of said sections in the employment of apprentices.

The Contractor is prohibited from performing work on this project with a subcontractor who is ineligible to perform work on the project pursuant to Section 1777.1 or 1777.7 of the Labor Code.
This project is subject to compliance monitoring and enforcement by the Department of Industrial Relations. All contractors and subcontractors must furnish electronic certified payroll records directly to the Labor Commissioner (aka Division of Labor Standards Enforcement) in a format prescribed by the Labor Commissioner no less than monthly.

As of **January 1, 2016**, the requirement to furnish electronic certified payroll records to the Labor Commissioner will apply to all public works projects, whether new or ongoing. City may require a copy of the electronic certified payroll records submitted to the DIR at anytime.

Exceptions: The Labor Commissioner may (but is not required to) excuse contractors and subcontractors from furnishing electronic certified payroll records to the Labor Commissioner on a project that is under the jurisdiction of one of the four legacy DIR-approved labor compliance programs (Caltrans, City of Los Angeles, Los Angeles Unified School District, and County of Sacramento) or that is covered by a qualifying project labor agreement.

These requirements will apply to all public works projects that are subject to the prevailing wage requirements of the Labor Code without regard to funding source.

The State General Prevailing Wage Determination is as established by the California Department of Industrial Relations (available at http://www.dir.ca.gov/DLSR/PWD/index.htm).

Skilled and Trained Workforce: This project is subject to Skilled and Trained Workforce Requirements per Sections 2600 through 2603 of the Public Contract Code.

Award of Contract: The following are conditions to the award of the contract:

I. Each contractor and subcontractor listed on the bid must be registered with the Department of Industrial Relations pursuant to Labor Code Section 1725.5. subject to the limited exceptions set forth in Labor Code Section 1771.1(a) (regarding the

submission of a bid as authorized by Business & Professions Code Section 7029.1 or Public Contract Code Section 10164 or 20103.5 provided the contractor is registered to perform public work pursuant to Section 1725.5 at the time the contract was awarded): and

II. No contractor or subcontractor may be awarded this contract unless the contractor and each subcontractor listed on the bid is registered with the Department of Industrial Relations pursuant to Section 17265.5.

Any questions regarding this bid package may be referred to Kevin Kwak, Public Works Engineering Division at 310.217.9643 (kkwak@cityofgardena.org).

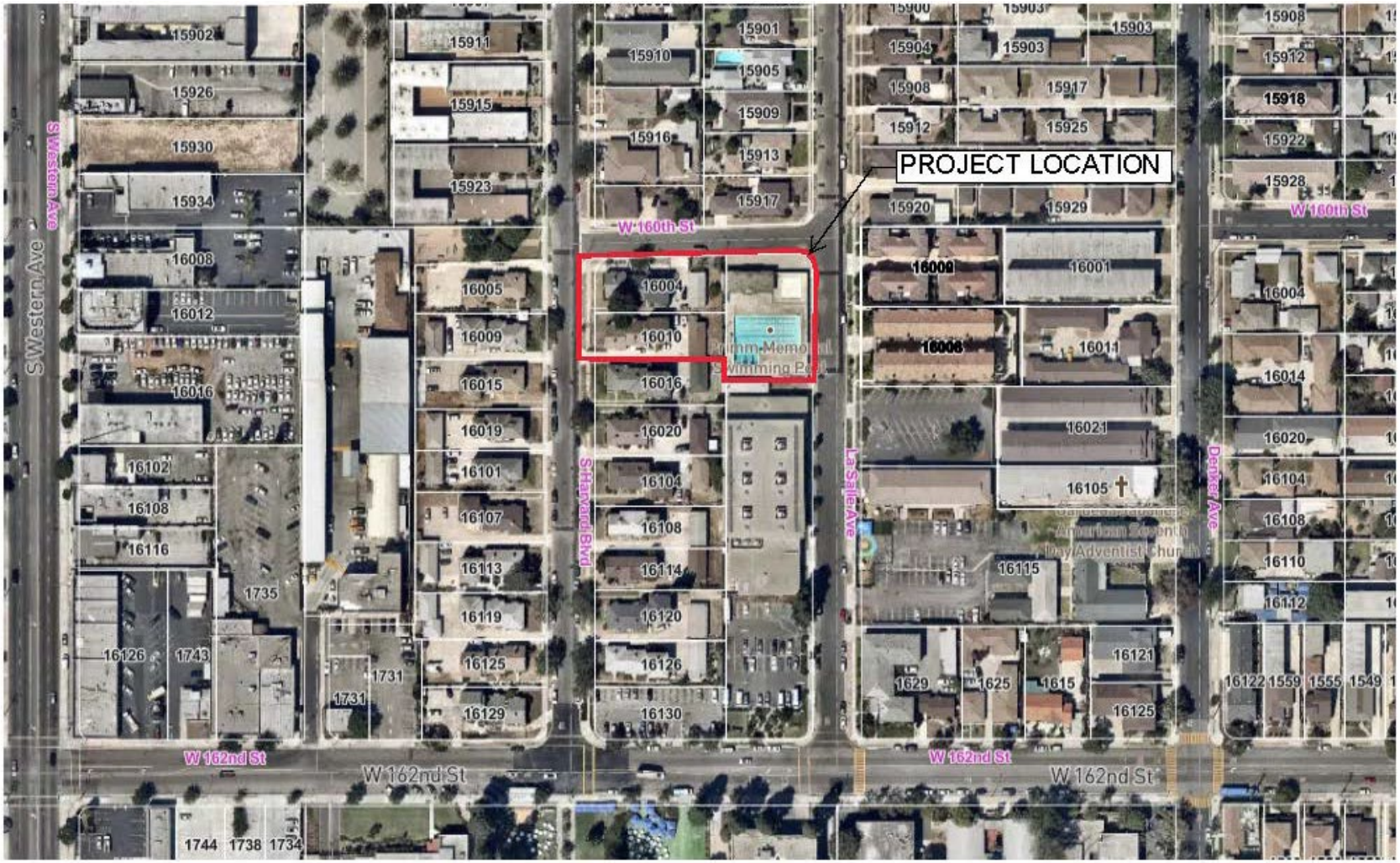

1" = 200 ft	Project Location Map	2/1/2022	

This map may represents a visual display of related geographic information. Data provided here on is not guarantee of acutual field conditions. To be sure of complete accuracy, please contact the responsible staff for most up-to-date information.

T A B L E O F C O N T E N T S

GARDENA COMMUNITY AQUATIC AND SENIOR CENTER

DESCRIPTION	PAGE
Title Page	
Notice Inviting Bids	
Location Map	
Table of Contents	i
Instructions to Bidders	ii-iv
BID PROPOSAL (To Be Submitted with Proposal)	
Bid Schedule	BP-2
Acknowledgement of Addenda Received	BP-5
Bidder's Declaration	BP-6
Non-collision Affidavit	BP-8
Declaration of Eligibility to Contract	BP-9
Bid Bond	BP-10
Designation of Subcontractors	BP-11
Construction Project Reference	BP-12
Certificate of Non-Discrimination by Contractors	BP-13
Certification Regarding Debarment, Suspension, Ineligibility and Voluntary Exclusion – Primary Covered Transition	BP-14
CONTRACT DOCUMENTS (To Be Submitted after Award)	
Agreement	CD-2
Faithful Performance Bond	CD-4
Payment Bond	CD-6
Workers' Compensation Insurance Certificate	CD-8
Indemnification and Hold Harmless Agreement Of Subrogation and Contribution	CD-9
Insurance	CD-10
GENERAL PROVISIONS	
PART 1 – GENERAL PROVISIONS	GP-1
Section 1 – General	GP-1
Section 2 – Scope of the Work	GP-4
Section 3 – Control of the Work	GP-7
Section 4 – Control of Material	GP-9
Section 5 – Legal Relations and Responsibilities	GP-10
Section 6 – Prosecution and Progress of the Work	GP-11
Section 7 – Measurement and Payment	GP-14
Section 8 – Facilities for Agency Personnel	GP-14
TECHNICAL PROVISIONS (GREENBOOK)	
SEPARATE TABLE OF CONTENTS	TP-1
PART 2 – CONSTRUCTION MATERIALS	TP-3
PART 3 – CONSTRUCTION METHODS	TP-16
PART 6 – TEMPORARY TRAFFIC CONTROL	TP-45
PART 8 – LANDSCAPE AND IRRIGATION	TP-47

DESCRIPTION	PAGE
TECHNICAL PROVISIONS (CSI)	
DIVISION 00 – PROCUREMENT AND CONTRACTING REQUIREMENT (SEPARATE TABLE OF CONTENTS)	TP-71
DIVISION 1 – GENERAL REQUIREMENTS	
DIVISION 3 – CONCRETE	
DIVISION 4 – MASONRY	
DIVISION 5 – METALS	
DIVISION 6 – WOOD AND PLASTICS	
DIVISION 7 – THERMAL AND MOISTURE PROTECTION	
DIVISION 8 – DOORS AND WINDOWS	
DIVISION 9 – FINISHES	
DIVISION 10 – SPECIALTIES	
DIVISION 11 – EQUIPMENT	
DIVISION 12 – FURNISHINGS	
DIVISION 13 – SPECIAL CONSTRUCTION	
DIVISION 14 – CONVEYING EQUIPMENT	
DIVISION 22 – PLUMBING	
DIVISION 23 – HEATING, VENTILATING, AND AIR CONDITIONING (HVAC)	
DIVISION 26 – ELECTRICAL	
DIVISION 28 – ELECTRONIC SAFETY AND SECURITY	
DIVISION 32 – EXTERIOR IMPROVEMENTS	
APPENDIX	
APPENDIX A: Geotechnical Investigation Report	
APPENDIX B: Soils Infiltration Testing Report	
APPENDIX C: Construction Notification Area Map	
APPENDIX D: Dry Utility Construction Support Plans	
APPENDIX E: Dry Utility (SCE, ATT, Spectrum) As-built Plans	
APPENDIX F: Aquatic & Senior Center Site Demo As-built Plans	

Note: The existing pool, its facility building, and four-plex buildings have already been demolished by others. The proposed demolition plan contains the most recent information, and in case of conflicting information, the plans will take precedence over the geotechnical report regarding the scope of demolition.

INSTRUCTIONS TO BIDDERS

FORM OF PROPOSAL

The Proposal shall be fully executed and submitted on the forms in the project specifications and shall be enclosed in a sealed envelope marked and addressed as directed in the Notice Inviting Bids.

PRPOSAL / BID DOCUMENTS

All Proposals shall include the following executed documents to be submitted with each bid:

Bidding Schedule

Acknowledgement of Addenda Received

Bidder's Declaration

Non-Collusion Affidavit

Declaration of Eligibility of Contract

Bid Bond

Designation of Subcontractors

Construction Project Reference

Certificate of Non-Discrimination by Contractors

Certification of Regarding Debarment, Suspension, Ineligibility and Voluntary Exclusion – Primary Covered Transitions

DELIVERY OF PROPOSAL

The Proposal shall be delivered by the time and to the place stipulated in the Notice Inviting Bids. It is the bidder's sole responsibility to see that its Proposal is received as stipulated. Any Proposal received after the scheduled closing time for receipt of proposals will be returned to the bidder unopened.

WITHDRAWAL OF PROPOSAL

The Proposal may be withdrawn by the bidder by means of a written request, signed by the bidder or its properly authorized representative. Such written request must be delivered to the place stipulated in the Notice Inviting Bids for receipt of proposals prior to the scheduled closing time for receipt of proposals. No Proposal may be withdrawn after the hour fixed for opening bids.

MODIFICATIONS AND ALTERNATIVE PROPOSALS

Unauthorized conditions, limitations, or provisions attached to the Proposal will render it informal and may be grounds for its rejection as non-responsive. The completed Proposal forms shall be without interlineations, alterations, or erasures. Alternative proposals will not be considered unless specifically requested. Oral, telegraphic, or telephonic proposals or modifications will not be considered.

DISCREPANCIES IN PROPOSALS

In the event there is more than one bid item in a Bidding Schedule, the bidder shall furnish a price for all bid items in the Schedule, and failure to do so will render the Proposal informal and may be grounds for its rejection as non-responsive. The bidder shall state in words and figures the unit prices or the specific sums as the case may be, for which it proposes to supply the labor, materials, supplies, or machinery, and completely perform the Contract. The total amount of each item bid and the total amount of the bid shall be stated in words and figures.

In case of any discrepancy between the words and the figures, the words shall prevail. If the unit price and the total amount named by a bidder for any items are not in agreement, the unit price alone will be considered as representing the bidder's intention and the total will be corrected to conform thereto.

PROPOSAL GUARANTEE – BIDDER'S SECURITY

Each bidder shall submit with his Proposal cash, an unconditional certified or cashier's check, or a bidder's bond, in the sum of the percentage of the bid stated in the Notice Inviting Bids, payable to the City as a guarantee that the bidder will, if its Proposal is accepted, execute the Contract and furnish a satisfactory Faithful Performance Bond, a satisfactory Payment Bond and insurance certificates as specified herein.

If a bidder to whom an award is made, fails or refuses to sign the Contract or furnish the required bonds and certificates, all within the time stated in Section 2-1.5 of the Special Provisions herein, the funds represented by said cash, check or bidder's bond shall be forfeited and become and remain the property of the City; the amount thereof being agreed to by the bidder and the surety as a bid bond forfeiture due to the City because of the delay in the execution of the Contract and in the performance of work thereunder, resulting from such failure or refusal, except that if the City awards the contract to the next lowest responsive responsible bidder, only that portion of the bidder's security equal to the difference between the two bids will be forfeited.

A Bid Bond must be obtained from a corporate surety authorized to do business as such in the State of California as an "admitted surety insurer" and shall be on the form furnished by the City or one substantially in conformance with it. Certified or cashier's checks must be drawn on a solvent state or nationally chartered bank or branch thereof in the State of California. The liability of the City in connection with the checks shall be limited to the return of the checks (without interest) as provided in Section 2-1.6 of the Special Provisions bound herein.

DISQUALIFICATION OF BIDDERS

A person, firm, or corporation shall NOT be allowed to make or file, or to be interested in, more than one bid, except an alternative bid when specifically requested; provided, however, a person, firm, or corporation who has submitted a sub-proposal to a bidder submitting a Proposal, or who has quoted prices on materials to such bidders, is not thereby disqualified from submitting a sub-proposal or from quoting prices to other bidders submitting proposals, or from submitting a Proposal as a prime contractor. Similarly, failure to comply with the registration requirements of Labor Code Section 1725.5, as further described in the Notice Inviting Bids, will disqualify a bidder.

ADDITIONAL REQUIREMENTS

The bidder's attention is directed to the Special Provisions and Technical Provisions bound herein for additional requirements of the Proposal and Contract Documents.

CONTRACT DOCUMENTS

Contract Documents are to be submitted within twenty-one (21) calendar days AFTER award of contract unless extended by agreement of the City. Failure to timely submit executed Contract Documents may be grounds for rejecting the bid award and forfeiture of the bid security. See enclosed documents commencing on page CD-1.

BID PROPOSAL (BP)

GARDENA COMMUNITY AQUATIC AND SENIOR CENTER

PROJECT NO. JN 978

Contractor: _____

Address: _____

Phone: _____

Fax: _____

License No.: _____

D.I.R. No. _____

Email: _____

To Be Submitted

WITH

Bid Package

BID PROPOSAL

PROJECT NO. JN 978

BID SCHEDULE

The undersigned, having examined the proposed Contract Documents titled:

GARDENA COMMUNITY AQUATIC AND SENIOR CENTER

and having visited the site and examined the conditions affecting the work, hereby proposes and agrees to furnish all labor, materials, equipment, and appliances, and to perform operations necessary to complete the work as required by said proposed Contract Documents and itemized bid schedule below. All work shall be completed within **two hundred sixty (260) Working Days** from the date the Notice of Proceed is issued by the Engineer. The maintenance period, City Holidays, and unforeseen weather conditions or other "Acts of God" are not counted towards working days. The City will also consider waiving delayed workings days, potentially caused by long lead items, contingent on the submission of supporting documents.

Item No.	Item Description	Unit	Approx. Quantity	Unit Price in Figures	Item Total
1	**Mobilization (Maximum 2%)**	L.S.	1	$	$
2	**General Conditions (Maximum 2%)**	L.S.	1	$	$
3	**Site Improvements:** complete and in place, per the plans and specs, including deferred submittals	L.S.	1	$	$
4	**Aquatics Building & Pool Equipment /Trash Enclosure Building:** in place and complete per the plans and specs, including deferred submittals	L.S.	1	$	$
5	**Pool and Pool Equipment**: in place and complete per the plans and specs, including deferred submittals	L.S.	1	$	$
6	**Utilities:** (Electrical, Phone & Fiber/Data Services; Sewer, Domestic Water, Fire Service Water, and Gas Services, per the plans and specs, including any deferred submittals	L.S.	1	$	$
7	**Photovoltaic System:** in place and complete, per the plans and specs, including any deferred submittals	L.S.	1	$	$
8	**Telecommunication/AV, Security**: in place and complete per the plans and specs, including deferred submittals	L.S.	1	$	$
9	**90-Day Landscape Maintenance Period**	L.S.		$	$

TOTAL CONTRACT BID:

(Figures) $ _____

(Words) _____

*** In case of error in extension of price into the total price column, the unit price will govern.**

PAYEMNT: All work required and shown on the construction plans and this specification for which no price or item is listed on this proposal, it shall be understood that such work, equipment, labor, tools and materials shall be provided without extra charge, allowance or direct payment of any kind. Payment for performing such work or furnishing such equipment, labor, tools and materials shall be included in the above lump sum or unit bid prices and no additional compensation will be paid, therefore. The Contractor is required to submit a detailed schedule of values within twenty-one (21) calendar days after award of contract.

If the City determines that any of the unit bid prices are significantly unbalanced to the potential detriment of the City, the bid will be replaced as non-responsive.

In case of any discrepancy between the words and the figures, the words shall prevail. If the unit price and the total amount for any item are not in agreement, the unit price alone shall be considered to represent the bidder's intention and all totals will be corrected to conform thereto.

Attached hereto is cash, a certified check, a cashier's check, or a bidder's bond in the amount of _____Dollar s, said amount being not less than 10 percent of the amount bid. Pursuant to Public Contract Code Sections 20172 and 20174, it is agreed a portion equal to the difference between the low bid and second low bid shall be retained as a bid bond forfeiture by the City if the undersigned fails or refuses to execute the Contract and furnish the required bonds and certificates of insurance within the time provided.

_____
Name of Bidder

_____
Signature of Bidder

BID PROPSOAL

PROJECT NO. JN 978

ACKNOWLEDGEMENT OF ADDENDA RECEIVED

The Bidder shall acknowledge the receipt of addenda by number and date each addendum received.

Addendum No. ____ Date _____ Addendum No. ____ Date _____

Addendum No. ____ Date _____ Addendum No. ____ Date _____

Addendum No. ____ Date _____ Addendum No. ____ Date _____

Addenda will be issued by email directly to the pre-qualified general contractors. It is the Bidder's sole responsibility to obtain and administer any Addendum related to this bid. **An Addendum must be acknowledged above by a bidder in its submitted form of Proposal.**

If an addendum or addenda has been issued by the City and not noted above as being received by the Bidder, the Bid Proposal may be rejected.

_____ _____

Bidder's Signature Date

BID PROPOSAL

PROJECT NO. JN 978

BIDDER'S DECLARATION

It is understood and agreed that:

1. The undersigned has carefully examined all documents which will form a part of the Contract; namely, the Notice Inviting Bids, the Instructions to Bidders, this Proposal, the Bid Bond, the Contract, the Faithful Performance Bond, the Payment Bond, the federal requirements, if any, the Plans and Specifications, the Special Provisions, and the Technical Provisions.

2. The undersigned has, by investigation at the site of the work and otherwise, satisfied himself as to the nature and location of the work and fully informed himself as to all conditions and matters, which can in any way affect the work or the cost thereof.

3. The undersigned fully understands the scope of work and has checked carefully all words and figures inserted in this Proposal and he further understands that the City will not be responsible for any errors or omissions in the preparation of the Proposal.

4. The undersigned agrees and acknowledges that he is aware of the provisions of Section 3700 of the Labor Code which requires every employer to be insured against liability for workers' compensation or to undertake self-insurance in accordance with the provisions of that Code, and that the undersigned will comply with such provisions before commencing the performance of the Contract if it is awarded to the undersigned.

The undersigned will execute the Contract and furnish the required statutory bonds and certificates of insurance within the period of time specified in the Contract Documents.

The undersigned will begin work after award of Contract and a Notice to Proceed has been given as herein specified and will complete said work within the time specified in the Bidding Schedule.

5. The undersigned certifies that this Proposal is genuine and not sham or collusive, or made in the interest or on behalf of a person not herein named, and the undersigned has not directly or indirectly induced or solicited any other bidder to put in a sham bid nor induced any other person, firm, or corporation to refrain from bidding. The undersigned has not in any manner sought by collusion to secure for himself any advantage over any other bidder.

6. The undersigned will accept an award and enter into a Contract for all work scheduled herein on which he puts in a bid. The awards for such work are to be entirely at the discretion of the City after evaluation of the bids as submitted. The undersigned agrees that the City shall recover or retain as a bid bond forfeiture an amount equal to the difference between the low bid and amount of the bid of the bidder with whom the City enters into a Contract, and the surplus, if any, shall be returned to the lowest bidder in accordance with the provisions of the Public Contract Code Sections 20172 and 20174 in the event of his failure to execute a Contract and furnish required bonds and insurance therefor within the time provided.

BIDDER'S DECLARATION (Continued)

7. The undersigned bidder stated under penalty of perjury that the representations made in submitting this bid are, to the best of his/her knowledge, true, accurate, and complete.

Respectfully submitted,

Contractor's Business Name	Contractor (Print) Title
Business Address: Street	Signature Title
City State Zip	Contractor's License No. and Classification
Business Phone Number	Business Fax Number
Date	
Name Title	Residence: Street
City State Zip	Residence Phone Number

Note: If the bid is made by an individual, it must be signed with the full name of the bidder, whose address must be given: if it is made by a firm, it must be signed in the co-partnership's name by a general partner thereof, who shall also sign his or her own name, and the name and full address of each partner (general and/or limited) must be given; and if it is made by a corporation, it must be signed by a properly authorized officer, the corporate name shall be set forth, and the corporate seal shall be affixed.

BID PROPOSAL

PROJECT NO. JN 978

NON-COLLUSION AFFIDAVIT

(To be executed by Bidder and submitted with Bid)

State of California

County of Los Angeles

_____ being first duly sworn, deposes and says that he or she is _____ of _____ _____ the party making the foregoing bid, that the bid is not made in the interest of, or on the behalf of, any undisclosed person, partnership, company, association, organization, or corporation; that the bid is genuine and not collusive or sham; that the bidder has not directly or indirectly colluded, conspired, connived, or agreed with any bidder or anyone else to put in a sham bid, or that anyone shall refrain from bidding; that the bidder has not in any manner, directly or indirectly, sought by agreement, communication, or conference with anyone to fix the bid price of the bidder or any other bidder, or to fix any overhead, profit, or cost element of that of any other bidder, or to secure any advantage against the public body awarding the contract of anyone interested in the proposed contract; that all statements contained in the bid are true; and, further, that the bidder has not, directly or indirectly, submitted his or her bid price or any breakdown thereof, or the contents thereof, or divulged information or data relative thereto, or paid, and will not pay fee to any corporation, or agent thereof to effectuate a collusive or sham bid.

_____
NAME OF BIDDER

_____
SIGNATURE OF BIDDER

_____
ADDRESS OF BIDDER

_____
CITY STATE ZIP

ALL SIGNATURES MUST BE WITNESSED BY NOTARY
(attach appropriate jurats)

BID PROPOSAL

PROJECT NO. JN 978

DECLARATION OF ELIGIBILITY TO CONTRACT

[Labor Code Section 1777.1; Public Contract Code Section 6109]

The undersigned, a duly authorized representative of the contractor, certifies and declares that:

1. The undersigned contractor is aware of Sections 1777.1 and 1777.7 of the California Labor Code, which prohibit a contractor or subcontractor who has been found by the Labor Commissioner or the Director of Industrial Relations to be in violation of certain provisions of the Labor Code, from bidding on, being awarded, or performing work as a subcontractor on a public works project for specified periods of time.

2. The undersigned contractor is not ineligible to bid on, be awarded or perform work as a subcontractor on a public works project by virtue of Sections 1771.1 or 1777.7 of the California Labor Code or any other provision of law.

3. The undersigned contractor is aware of California Public Contract Code Section 6109, which states:

> "(a) A public entity, as defined in Section 1100 [of the Public Contract Code], may not permit a contractor or subcontractor who is ineligible to bid or work on, or be awarded, a public works project pursuant to Section 1777.1 or 1777.7 of the Labor Code to bid on, be awarded, or perform work as a subcontractor on, a public works project. Every public works project shall contain a provision prohibiting a contractor from performing work on a public works project with a subcontractor who is ineligible to perform work on the public works project pursuant to Section 1771.1 or 1777.7 of the Labor Code."
>
> "(b) Any contract on a public works project entered into between a contractor and a debarred subcontractor is void as a matter of law. A debarred subcontractor may not receive any public money for performing work as a subcontractor on a public works contract, and any public money that may have been paid to a debarred subcontractor by a contractor on the project shall be returned to the awarding body. The contractor shall be responsible for the payment of wages to workers of a debarred subcontractor who has been allowed to work on the project."

4. The undersigned contractor has investigated the eligibility of each and every subcontractor the undersigned contractor intends to use on this public works project, and has determined that none of them are ineligible to perform work as a subcontractor on a public works project by virtue of the foregoing provisions of the Public Contract Code, Sections 1771.1 or 1777.7 of the Labor Code, or any other provision of law.

I declare under penalty of perjury under the laws of the State of California that the foregoing is true and correct. Executed this _____ day of _____, 20___, at _____ _____ *(place of execution)*, California_____.

Signature: _____ Name: _____

Title: _____ Company: _____

BID PROPOSAL

PROJECT NO. JN 978

BID BOND

KNOW ALL MEN BY THESE PRESENTS:

THAT _____, as Principal,
and _____, as Surety,
are held firmly bound unto the City of Gardena in the sum of $_____;
_____DOLLARS,
(not less than ten percent of total amount of bid)
for the payment of which sum well and truly to be made, we bind ourselves, our heirs, executors, administrators, successors, and assigns, jointly and severally, firmly by these presents.

WHEREAS, said Principal has submitted a bid to the City to perform all work required under the following:

PROJECT: **GARDENA COMMUNITY AQUATIC AND SENIOR CENTER**

NOW, THEREFORE, if said Principal is awarded a Contract by the City and, within the time and in the manner required in the Specifications for said project, enters into the written form of Contract bound with said Specifications and furnishes the required bonds, one to guarantee faithful performance and the other to guarantee payment for labor and materials, then this obligation shall be null and void, otherwise it shall remain in full force and effect. In the event suit is brought upon this bond by the City and judgment is recovered, said Surety shall pay all costs incurred by the City in such suit, including a reasonable attorneys' fee to be fixed by the court. Surety hereby waives the provisions of California Civil Code §2845.

SIGNED AND SEALED, this day of _____, 20_____.

_____(SEAL) _____(SEAL)
Principal Surety

BY:_____ BY:_____
Signature Signature

Note: This bond must be dated, all signatures must be notarized, and evidence of the authority of any person signing as attorney–in-fact must be attached.

BID PROPOSAL

PROJECT NO. JN 978

DESIGNATION OF SUBCONTRACTORS

In compliance with the "Subletting and Subcontracting Fair Practices Act" being Sections 4100-4113 of the Public Contract Code of the State of California, and any amendments thereto, each bidder shall set forth below the name and location of the place of business of each subcontractor who will perform work or labor or render service to the prime contractor in or about the construction of the work or improvement in an amount in excess of one-half (1/2) of one percent (1%) of the prime contractor's total bid, and shall further set forth the portion of the work which will be done by each subcontractor. Only one subcontractor for each such portion shall be listed.

If the contractor fails to specify a subcontractor for any portion of the work to be performed under the contract, he shall be deemed to have agreed to perform such portion himself, and he shall not be permitted to subcontract that portion of the work except under the conditions hereinafter set forth.

Subletting or subcontracting of any portion of the work to which subcontractor was designated in the original bid shall only be permitted in cases of public emergency or necessity, and then only after a finding reduced to writing as a public record of the legislative body of the City.

This page may be duplicated, if needed.

Portion of Work %	Subcontractor's Name & Address	Type of Work	State License Number	Class	D.I.R. Number

~~Not more than _____%.~~

BID PROPOSAL

PROJECT NO. JN 978

GENEAL CONTRACTOR EXPERIENCE REQUIREMENTS

Contractor/Bidder certifies that it meets the qualifications and experience requirements established in the project specifications, plans and as follows: (Contractor may be immediately disqualified at the discretion of the City if the following conditions are not met)

General Contractor has, in the last ten (10) years, constructed at least three (3) comparable projects. The qualified comparable projects are as follows:

- Comparable projects in value of at least $5,000,000.
- (2) of the project must be public use aquatic facilities and include all aspects of pool construction including excavation, shell construction, pool electrical, pool plumbing, pool mechanical, and pool deck construction.
- (2) of the projects must demonstrate minimum two-story structural steel construction, with deep pile foundation and/or mat slab foundation.

Number of years as a contractor in construction work of this type: _____

Three (3) comparable projects at minimum (may additionally attach qualifications/ experiences):

1. Name (Firm/Agency): _____
   Address: _____
   Contact Person: _____ Telephone No.: _____
   Project Title: _____
   Project Location: _____
   Project Scope: _____
   _____
   _____
   _____
   _____
   _____
   Date of Completion: _____ Contract Amount: $ _____

2. Name (Firm/Agency): _____
   Address: _____
   Contact Person: _____ Telephone No.: _____
   Title of Project: _____
   Project Location: _____
   Project Scope: _____
   _____

Date of Completion: _____ Contract Amount: $_____

3. Name (Firm/Agency): _____
   Address: _____
   Contact Person: _____ Telephone No.: _____
   Title of Project: _____
   Project Location: _____
   Project Scope: _____

Date of Completion: _____ Contract Amount: $_____

NOTE: If requested by the City, the bidder shall furnish a certified financial statement, references, and other information sufficiently comprehensive to permit an appraisal of his current financial condition.

Bidder's Signature _____

BID PROPOSAL

PROJECT NO. JN 978

SWIMMING POOL SUBCONTRACTOR EXPERIENCE REQUIREMENTS

Contractor/Bidder certifies that it meets the qualifications and experience requirements established in the project specifications, plans and as follows: (Contractor may be immediately disqualified at the discretion of the City if the following conditions are not met)

- Subcontractor has, in the last ten (10) years, constructed at least three (3) commercially designed municipal and/or public-use swimming pools, each of which have incorporated a minimum size of 4,000 square feet of water surface area (200,000 Gallons) with a concrete and ceramic tile perimeter overflow gutter and self-modulating balance tank.

Subcontractor's Name: _____

1. Name (Firm/Agency): _____
   Address: _____
   Contact Person: _____ Telephone No.: _____
   Project Title: _____
   Project Location: _____
   Pool Area (SF or Gal) _____
   Date of Completion: _____ Contract Amount: $ _____

2. Name (Firm/Agency): _____
   Address: _____
   Contact Person: _____ Telephone No.: _____
   Project Title: _____
   Project Location: _____
   Pool Area (SF or Gal) _____
   Date of Completion: _____ Contract Amount: $ _____

3. Name (Firm/Agency): _____
   Address: _____
   Contact Person: _____ Telephone No.: _____
   Project Title: _____
   Project Location: _____
   Pool Area (SF or Gal) _____
   Date of Completion: _____ Contract Amount: $ _____

NOTE: If requested by the City, the bidder shall furnish a certified financial statement, references, and other information sufficiently comprehensive to permit an appraisal of his current financial condition.

Bidder's Signature _____

BID PROPOSAL

PROJECT NO. JN 978

CONCRETE POOL DECK SUBCONTRACTOR EXPERIENCE REQUIREMENTS

Contractor/Bidder certifies that it meets the qualifications and experience requirements established in the project specifications and plans and as follows: (Contractor may be immediately disqualified at the discretion of the City if the following conditions are not met)

- Subcontract has, in the last ten (10) years, constructed at least three (3) commercially designed pool decks, each of which have had either a cantilevered deck over gutter system, or a perimeter "rim flow" pool gutters system. Each of which has incorporated a minimum size of 4,000 square feet of water surface area of the swimming pool.

Subcontractor's Name: _____

1. Name (Firm/Agency): _____
   Address: _____
   Contact Person: _____ Telephone No.: _____
   Project Title: _____
   Project Location: _____
   Water Surface Area(SF) _____
   Date of Completion: _____ Contract Amount: $ _____

2. Name (Firm/Agency): _____
   Address: _____
   Contact Person: _____ Telephone No.: _____
   Project Title: _____
   Project Location: _____
   Water Surface Area(SF) _____
   Date of Completion: _____ Contract Amount: $ _____

3. Name (Firm/Agency): _____
   Address: _____
   Contact Person: _____ Telephone No.: _____
   Project Title: _____
   Project Location: _____
   Water Surface Area(SF) _____
   Date of Completion: _____ Contract Amount: $ _____

NOTE: If requested by the City, the bidder shall furnish a certified financial statement, references, and other information sufficiently comprehensive to permit an appraisal of his current financial condition.

Bidder's Signature _____

BID PROPOSAL

PROJECT NO. JN 978

CERTIFICATE OF NON-DISCRIMINATION BY CONTRACTORS

As suppliers of goods or services to the City, the firm listed below certifies that it does not discriminate in its employment with regard to race, color, religion, sex, or national origin; that it is in compliance with all applicable federal, state, and local directives, and executive orders regarding non-discrimination in employment; and that it agrees to pursue positively and aggressively the principle of equal opportunity in employment.

We agree specifically:

1. To establish or observe employment policies which affirmatively promote opportunities for minority persons at all job levels.

2. To communicate this policy to all persons concerned, including all company employees, outside recruiting services, especially those serving minority communities, and to the minority communities at large.

3. To take affirmative steps to hire minority employees within the company.

FIRM_____

TITLE OF PERSON SIGNING_____

SIGNATURE_____

DATE_____

Please include any additional information available regarding equal opportunity employment programs now in effect within your company:

_____

_____

_____

_____

_____

_____

BID PROPOSAL

PROJECT NO. JN 978

CERTIFICATION REGARDING DEBARMENT, SUSPENSION, INELIGIBILITY AND VOLUNTARY EXCLUSION – PRIMARY COVERED TRANSACTIONS

(BEFORE COMPLETING CERTIFICATION, READ INSTRUCTIONS ON NEXT PAGE)

The Contractor shall not perform Work with any Subcontractor that has been debarred or suspended pursuant to California Labor Code Section 1777.1 or any other federal or State law providing for the debarment of contractors from public works. The Contractor and Subcontractors shall not be debarred or suspended throughout the duration of the Contract pursuant to Labor Code Section 1777.1 or any other federal or State law providing for the debarment of contractors from public works. If the Contractor or any Subcontractor becomes debarred or suspended during the duration of the Project, the Contractor shall immediately notify the City.

1. The prospective primary participant certifies to the best of its knowledge and belief, that it and its principals:

    a. Are not presently debarred, suspended, proposed for debarment, declared ineligible, or voluntarily excluded from covered transactions by any Federal department or agency;

    b. Have not within a 5-year period preceding this proposal been convicted of or had a civil judgment rendered against them for commission of fraud or a criminal offense in connection with obtaining, attempting to obtain, or performing a public (Federal, State or local) transaction or contract under a public transaction; violation of Federal or State antitrust statutes or commission of embezzlement, theft, forgery, bribery, falsification or destruction of records, making false statement, or receiving stolen property;

    c. Are not presently indicted for or otherwise criminally or civilly charged by a governmental entity (Federal, State or local) with commission of any of the offenses enumerated in paragraph 1b of this certification; and

    d. Have not within a 5-year period preceding this application/proposal had one or more public transactions (Federal, State or local) terminated for cause or default.

2. Where the prospective primary participant is unable to certify to any of the statements in this certification, such prospective participant shall attach an explanation to this proposal.

Signature: _____ Name: _____

Title: _____ Company: _____

CERTIFICATION REGARDING DEBARMENT, SUSPENSION, INELIGIBILITY AND VOLUNTARY EXCLUSION – PRIMARY COVERED TRANSACTIONS (Continued)

INSTRUCTIONS FOR CERTIFICATION

1. By signing and submitting this proposal, the prospective primary participant is providing the certification set out below.
2. The inability of a person to provide the certification required below will not necessarily result in denial of participation in this covered transaction. The prospective participant shall submit an explanation of why it cannot provide the certification set out below. The certification or explanation will be considered in connection with the department or agency's determination whether to enter into this transaction. However, failure of the prospective primary participant to furnish a certification or an explanation shall disqualify such person from participation in this transaction.
3. The certification in this clause is a material representation of fact upon which reliance was placed when the department or agency determined to enter into this transaction. If it is later determined that the prospective primary participant knowingly rendered an erroneous certification, in addition to other remedies available to the Federal Government, the department or agency may terminate this transaction for cause or default.
4. The prospective primary participant shall provide immediate written notice to the department or agency to which this proposal is submitted if at any time the prospective primary participant learns that its certification was erroneous when submitted or has become erroneous by reason of changed circumstances.
5. The terms "covered transaction," "debarred," "suspended," "ineligible," "lower tier covered transaction," "participant," "person," "primary covered transaction," "principal," "proposal," and "voluntarily excluded," as used in this clause, have the meanings set out in the Definitions and Coverage sections of the rules implementing Executive Order 12549. You may contact the department or agency to which this proposal is submitted for assistance in obtaining a copy of those regulations (13 CFR Part 145).
6. The prospective primary participant agrees by submitting this proposal that, should the proposed covered transaction be entered into, it shall not knowingly enter into any lower tier covered transaction with a person who is debarred, suspended, declared ineligible, or voluntarily excluded from participation in this covered transaction, unless authorized by the department or agency entering into this transaction.
7. The prospective primary participant further agrees by submitting this proposal that it will include the clause titled "Certification Regarding Debarment, Suspension, Ineligibility and Voluntary Exclusion--Lower Tier Covered Transactions," provided by the department or agency entering into this covered transaction, without modification, in all lower tier covered transactions and in all solicitations for lower tier covered transactions.
8. A participant in a covered transaction may rely upon a certification of a prospective participant in a lower tier covered transaction that it is not debarred, suspended, ineligible, or voluntarily excluded from the covered transaction, unless it knows that the certification is erroneous. A participant may decide the method and frequency by which it determines the ineligibility of its principals. Each participant may, but is not required to, check the Nonprocurement List.
9. Nothing contained in the foregoing shall be construed to require establishment of a system of records in order to render in good faith the certification required by this clause. The knowledge and information of a participant is not required to exceed that which is normally possessed by a prudent person in the ordinary course of business dealings.
10. Except for transactions authorized under paragraph 6 of these instructions, if a participant in a covered transaction knowingly enters into a lower tier covered transaction with a person who is suspended, debarred, ineligible, or voluntarily excluded from participation in this transaction, in addition to other remedies available to the Federal Government, the department or agency may terminate this transaction for cause or default.

CONTRACT DOCUMENTS (CD)

GARDENA COMMUNITY AQUATIC AND SENIOR CENTER

PROJECT NO.JN 978

To be Submitted
within twenty-one (21) calendar days

AFTER
Award of Contract

CONTRACT DOCUMENT

PROJECT NO. JN 978

AGREEMENT

THIS AGREEMENT, made and entered into this _____ day of _____, 20_____, by and between CITY OF GARDENA in the State of California, hereinafter referred to as "CITY" and_____, hereinafter referred to as "CONTRACTOR."

The City and the Contractor mutually agree as follows:

ARTICLE I.

THE PROJECT

For and in consideration of the mutual promises set forth herein, Contractor agrees to perform and complete in a good and workmanlike manner all work required by the Contract Documents for City Project No. JN 978 , which is described as follows:

Title: GARDENA COMMUNITY AQUATIC AND SENIOR CENTER

Said work shall be performed in accordance with the Plans, Specifications and other Contract Documents, all of which are referenced in Article III hereof and incorporated herein as though fully set forth. Contractor shall furnish at its own expense all labor, materials, equipment and services necessary therefor, except such labor, materials, equipment and services as are provided in the Contract Documents to be furnished by City.

This project is subject to Skilled and Trained Workforce Requirements per Sections 2600 through 2603 of the Public Contract Code.

ARTICLE II.

CONTRACT SUM AND PAYMENT

For performing and completing the work in accordance with the Contract Documents, City shall pay Contractor, in full compensation therefor, the contract sum set forth in the Bidding Schedule. Said sum shall constitute payment in full for all work performed hereunder, including, without limitation, all labor, materials, equipment, tools and services used or incorporated in the work, supervision, administration, overhead, expenses and any and all other things required, furnished or incurred for completion of the work as specified in the Contract Documents. City shall make payments to Contractor on account of the contract sum at the time, in the manner, and upon the conditions specified in the Contract Documents.

ARTICLE III.

CONTRACT DOCUMENTS

The Contract Documents, which constitute the entire agreement between the City and the Contractor, are enumerated as follows: Proposal Documents, including the Notice Inviting Bids, Instructions to Bidders, Bidding Schedule, Bidder's Declaration, Designation of Subcontractors, Bidder's Assurance, and Fair Employment Practices documents; this Agreement; Standard Specifications; Special Provisions; Technical Provisions; Drawings; Plans; and all addenda issued prior to and all modifications issued after the execution of this Agreement. These form the Contract, and all are as fully a part of the Contract as if attached to this Agreement or repeated herein.

ARTICLE IV.

EFFECTIVE DATE

This Agreement shall become effective and commence as of the date set forth below on which the last of the parties, whether City or Contractor, executes said Agreement.

IN WITNESS WHEREOF, the parties hereto have caused this Agreement to be executed and attested by their proper officers thereunto duly authorized.

CITY

By:_____
MAYOR (Sign)

Date: _____

SEAL

Attest:
By: _____
CITY CLERK (Sign)

Date:_____

CONTRACTOR

By:_____
Sign / Title

Date: _____

Attest: (Contractor)

By:_____
Sign / Title

Date: _____

APPROVED AS TO FORM:

By:_____
CITY ATTORNEY (Sign)

Date:_____

CONTRACT DOCUMENT

PROJECT NO. JN 978

FAITHFUL PERFORMANCE BOND

WHEREAS, the City of Gardena has awarded to _____, hereinafter designated as the "Principal", a Contract for:

PROJECT: GARDENA COMMUNITY AQUATIC AND SENIOR CENTER

WHEREAS, said Principal is required under the terms of said Contract to furnish a bond for the faithful performance of said Contract;

NOW, THEREFORE, we,_____
as Principal, and_____
as Surety, are held and firmly bound unto the City in the sum of_____
_____
Dollars ($_____), this amount being not less than one hundred percent (100%) of the total Contract price, lawful money of the United States of America, for payment of which sum well and truly to be made we bind ourselves, our heirs, executors, administrators, and successors, jointly and severally, firmly by these presents. In case suit is brought upon this bond, the Surety will pay all court costs and reasonable attorneys' fees to the City of Gardena in an amount to be fixed by the court.

THE CONDITION OF THIS OBLIGATION IS SUCH THAT, if the hereby bounded Principal, his or its heirs, executors, administrators, successors, or assigns, shall in all things stand to and abide by, well and truly keep and perform all the undertakings, terms, covenants, conditions and agreements in the said Contract and any alteration thereof, made as therein provided, all within the time and in the manner therein designated and in all respects according to their true intent and meaning, then this obligation shall become null and void; otherwise, it shall be and remain in full force and effect.

FURTHER, the Surety, for value received, hereby stipulates and agrees that no change, extension of time, alteration, addition, or modification to the terms of the Contract, or of the work to be performed thereunder, or the specifications for the same, shall in any way affect its obligations under this bond, and it does hereby waive notice of any such change, extension of time, alteration, addition, or modification to the terms of the Contract or to the work or to the specifications thereunder. Surety hereby waives the provisions of California Civil Code §§ 2845 and 2849. The City is the principal beneficiary of this bond and has all rights of a party hereto.

This bond shall remain in full force and effect for a warranty period of one full year after acceptance of the job by the City.

IN WITNESS WHEREOF, three (3) identical counterparts of this instrument, each of which shall for all purposes be deemed an original thereof, have been duly executed by the Principal and

Surety named herein, on the_____ day of_____, 20___, the name and corporate seal of each corporate party being hereto affixed and these presents duly signed by its undersigned representative pursuant to authority of its governing body.

[PRINCIPAL]

By _____

Title _____

_____

Signature

[SURETY]

By _____

Title _____

Address _____

_____

Phone No. _____

_____

Signature

All signatures must be notarized.

Appropriate modifications shall be made to this form if the bond is being furnished for the performance of an act not provided for by agreement.

Corporations must affix corporate seal.

CONTRACT DOCUMENT

PROJECT NO. JN 978

PAYMENT BOND

WHEREAS, the City of Gardena has awarded to _____, as Contractor, a contract for the work described as follows:

PROJECT: GARDENA COMMUNITY AQUATIC AND SENIOR CENTER

AND WHEREAS, said Contractor is required to furnish a bond in connection with said contract, to secure the payment of claims of laborers, mechanics, materialmen and other persons, as provided by law;

NOW, THEREFORE, we, the undersigned Contractor and Surety, are held firmly bound unto the City in the sum of _____, Dollars ($_____) this amount being not less than one hundred percent (100%) of the total Contract price, for which payment well and truly to be made we bind ourselves, our heirs, executors and administrators, successors and assigns, jointly and severally, firmly by these presents.

THE CONDITION OF THIS OBLIGATION IS SUCH THAT, if said Contractor, its heirs, executors, administrators, successors, assigns, or subcontractors shall fail to pay any of the persons named in Civil Code Section 3181, or amounts due under the Unemployment Insurance Code with respect to work or labor performed under the contract, or any amounts required to be deducted, withheld, and paid over to the Employment Development Department from the wages of employees of the Contractor and its subcontractors pursuant to Section 13020 of the Unemployment Insurance Code, or any other amounts due to persons under any applicable project contract or law, with respect to such work and labor, then the Surety or Sureties herein will pay for the same in an amount not exceeding the sum specified in this bond, otherwise the above obligation shall be void. In case suit is brought upon this bond, the said Surety will pay all court costs and reasonable attorneys' fees to the plaintiff(s) and City in an amount to be fixed by the court.

This bond shall inure to the benefit of any of the persons named in Civil Code Section 3181 as to give a right of action to such persons or their assigns in any suit brought upon this bond.

Further, the Surety, for value received, hereby stipulates and agrees that no change, extension of time, alteration, addition, or modification to the terms of the Contract, or of the work to be performed thereunder, or the specifications for the same, shall in any way affect its obligations under this bond, and it does hereby waive notice of such change, extension of time, alteration, addition, or modification to the terms of the Contract or to the work or to the specifications thereunder. Surety hereby waives the provisions of California Civil Code §§ 2845 and 2849.

This bond shall remain in full force and effect for six full months after the period in which verified claims may be filed as provided for in Section 3184 of the California Civil Code.

IN WITNESS WHEREOF, we have hereunto set our hands and seals on this_____day of _____20_____.

[PRINCIPAL]

By _____

Title _____

_____

Signature

[SURETY]

By _____

Title _____

Address _____

_____

Phone No. _____

_____

Signature

All signatures must be notarized.

Appropriate modifications shall be made to this form if the bond is being furnished for the performance of an act not provided for by agreement.

Corporations must affix corporate seal.

CONTRACT DOCUMENT

PROJECT NO. JN 978

WORKER'S COMPENSATION INSURANCE CERTIFICATE

The Contractor shall execute the following form as required by the California Labor Code, Sections 1860 and 1861:

> I am aware of the provisions of Section 3700 of the Labor Code which require every employer to be insured against liability for workers' compensation or to undertake self-insurance in accordance with the provisions of that Code, and I will comply with such provisions before commencing the performance of the work of the Contract.

DATED:_____

_____
CONTRACTOR

By_____
Signature

_____
Title

ATTEST:

By_____
Signature

_____
Title

CONTRACT DOCUMENT

PROJECT NO. JN 978

INDEMNIFICATION AND HOLD HARMLESS AGREEMENT AND WAIVER OF SUBROGATION AND CONTRIBUTION

GARDENA COMMUNITY AQUATIC AND SENIOR CENTER

To the fullest extent permitted by law, Indemnitor hereby agrees, at its sole cost and expense, to defend, protect, indemnify, and hold harmless the City of Gardena, State of California and its respective elected officials, officers, attorneys, agents, employees, volunteers, successors, and assigns (collectively "Indemnitees") from and against any and all damages, costs, expenses, liabilities, claims, demands, causes of action, proceedings, expenses, judgments, penalties, liens, and losses of any nature whatsoever, including fees of accountants, attorneys, or other professionals and all costs associated therewith (collectively "Liabilities"), arising or claimed to arise, directly or indirectly, out of, in connection with, resulting from, or related to any act, failure to act, error, or omission of Indemnitor or any of its officers, agents, servants, employees, subcontractors, materialmen, suppliers or their officers, agents, servants or employees, arising or claimed to arise, directly or indirectly, out of, in connection with, resulting from, or related to the above-referenced contract, agreement, license, or permit (the "Agreement") or the performance or failure to perform any term, provision, covenant, or condition of the Agreement, including this indemnity provision. This indemnity provision is effective regardless of any prior, concurrent, or subsequent active or passive negligence by Indemnitees and shall operate to fully indemnify Indemnitees against any such negligence. This indemnity provision shall survive the termination of the Agreement and is in addition to any other rights or remedies which Indemnitees may have under the law. Payment is not required as a condition precedent to an Indemnitee's right to recover under this indemnity provision, and an entry of judgment against an Indemnitee shall be conclusive in favor of the Indemnitee's right to recover under this indemnity provision. Indemnitor shall pay Indemnitees for any attorney fees and costs incurred in enforcing this indemnification provision. Notwithstanding the foregoing, nothing in this instrument shall be construed to encompass (a) Indemnitees' sole negligence or willful misconduct to the limited extent that the underlying Agreement is subject to Civil Code 2782(a), or (b) the contracting public agency's active negligence to the limited extent that the underlying Agreement is subject to Civil Code 2782(b). This indemnity is effective without reference to the existence or applicability of any insurance coverages which may have been required under the Agreement or any additional insured endorsements which may extend to Indemnitees.

Indemnitor, on behalf of itself and all parties claiming under or through it, hereby waives all rights of subrogation and contribution against the Indemnitees, while acting within the scope of their duties, from all claims, losses and liabilities arising out of or incident to activities or operations performed by or on behalf of the Indemnitor regardless of any prior, concurrent, or subsequent active or passive negligence by the Indemnitees. Accountants, attorneys, or other professionals employed by Indemnitor to defend Indemnitees shall be selected by Indemnitees.

In the event there is more than one person or entity named in the Agreement as an Indemnitor, then all obligations, liabilities, covenants and conditions under this instrument shall be joint and several.

"Indemnitor"

Company/Contractor _____

Name & Title _____

Signature & Date _____

CONTRACT DOCUMENT

PROJECT NO. JN 978

INSURANCE

CERTIFICATION OF INSURANCE (COI) SHALL BE SUBMITTED BY THE CONTRACTOR

1. **COMMENCEMENT OF WORK**. Contractor shall not be authorized to commence Work under this Contract until it has obtained approved insurance. Before beginning Work hereunder, during the entire period of this Contract, for any extensions hereto, and for periods after the end of this Contract as may be indicated below, Contractor must have and maintain in place not less than the insurance coverages required in this Section at his sole cost and expense. Contractor's insurance shall comply with all items specified by this Contract. Any subcontractors shall be subject to all of the requirements of this Section and Contractor shall be responsible to obtain evidence of insurance from each subcontractor and provide it to City before the subcontractor commences work. Alternatively, Contractor's insurance may cover all subcontractors. The insurance requirements are not intended to and shall not in any manner limit or qualify the liabilities and obligations assumed by Contractor under this Contract.

2. **INSURANCE COMPANY REQUIREMENTS.** All insurance policies used to satisfy the requirements imposed hereunder shall be issued by insurers admitted to do business in the State of California. Insurers shall have a current Best's rating of not less than A-:VII, unless otherwise approved by City.

3. **COVERAGES, LIMITS AND POLICY REQUIREMENTS**. Contractor shall maintain the types of coverages indicated below:

4. **COMPREHENSIVE GENERAL LIABILITY INSURANCE.** A policy of comprehensive general liability insurance written on a per occurrence basis in an amount not less than either one million dollars ($1,000,000) per occurrence or two million dollars ($2,000,000) aggregate.

5. **COMMERCIAL AUTO LIABILITY INSURANCE**. A policy including all coverages provided by and to the extent afforded by Insurance Services Office form CA 0001, ed. 12/93, including Symbol 1 (any auto) with no special limitations affecting City. The minimum auto insurance coverage shall be one million dollars ($1,000,000) combined single limit per accident.

6. **WORKER'S COMPENSATION AND EMPLOYER'S LIABILITY INSURANCE**. A policy which meets all statutory benefit requirements of the Labor Code, or other applicable law, of the State of California. The minimum coverage limits for said insurance shall be no less than one million dollars ($1,000,000) per claim. The policy shall be issued by an insurance company which is admitted to do business in the State of California and shall contain a clause that the policy may not be canceled without thirty (30) days prior written notice, return receipt requested, is mailed to City.

   In accordance with the provisions of section 1860 of the California Labor Code, Contractor's attention is directed to the requirement that in accordance with the provisions of section 3700 of the California Labor Code, Contractor and every subcontractor will be required to secure the payment of compensation of his or her employees, or obtain a certificate of

consent to self-insurance by the Director of Industrial Relations in accordance with the requirements of Section 3700 of the California Labor Code.

In accordance with the provisions of section 1861 of the California Labor Code, Contractor shall sign and file with the awarding body the following certification prior to performing any work on the Project:

> "I am aware of the provisions of section 3700 of the Labor Code which require every employer to be insured against liability for worker's compensation or to undertake self-insurance in accordance with the provisions of that code, and I will comply with such provisions before commencing the performance of the work of this contract."

7. **POLICY REQUIREMENTS.** The policies set forth above shall comply with the following, as evidenced by the policies or endorsements to the policies:

   (i) City, State and its appointed and elected officers, employees, agents and volunteers shall be added as additional insured to the policy as respects liabilities arising out of the performance of any work done under the Contract.

   (ii) The insurer shall agree to provide City with thirty (30) days prior written notice, return receipt requested, of any cancellation, non-renewal or material change in coverage.

   (iii) For any claims with respect to the Project covered by this Contract, Contractor's insurance coverage shall be primary insurance as respects City, State and its elected and appointed officers, employees, agents and volunteers. Any insurance or self-insurance maintained by City, State and its elected and appointed officers, employees, agents and volunteers shall be excess of Contractor's insurance and shall not contribute with it.

   (iv) The policy shall apply separately to each insured against whom claim is made or suit is brought except with respect to the limits of the company's liability.

8. **COURSE OF CONSTRUCTION INSURANCE.** Contractor shall provide course of construction insurance covering for "all risks" of loss in the amount of the completed value of the Work. The City shall be named as a loss payee and the insurer shall waive all rights of subrogation against the City. This policy shall be issued by an insurance company which is admitted to do business in the State of California and shall contain a clause that the policy may not be canceled until thirty (30) days written notice, return receipt requested, is mailed to the City. Course of Construction Insurance may be provided for each separate Phase.

9. **ADDITIONAL REQUIREMENTS.** The procuring of required insurance shall not be construed to limit Contractor's liability hereunder nor to fulfill the indemnification provisions and requirements of this Contract. City shall notify Contractor in writing of changes in the insurance requirements. If Contractor does not deposit copies of acceptable insurance policies or endorsements with City incorporating such changes within sixty (60) days of receipt of such notice, Contractor shall be deemed in default hereunder.

10. **DEDUCTIBLES.** Any deductible or self-insured retentions must be declared to and approved by City. Contractor shall guarantee that, at the option of the City, either: the insurer shall eliminate or reduce such deductibles or self-insured retentions with respect to City, its officers, employees, agents and volunteers (with additional premium, if any, to be paid by Contractor); or Contractor shall provide satisfactory financial guarantee for payment

of losses and related investigations, claim administration and defense expenses in the amount of any deductibles or self-insured retentions.

11. **VERIFICATION OF COMPLIANCE.** Contractor shall furnish City with the required endorsements attached hereto. All documents are to be received and approved by City before Work commences. Not less than fifteen (15) days prior to the expiration date of any policy of insurance required by this Contract, Contractor shall deliver to City a binder or certificate of insurance with respect to each renewal policy, bearing a notation evidencing payment of the premium therefore, or accompanied by other proof of payment satisfactory to City. Contractor shall provide full copies of any requested policies to City within three (3) days of any such request by City.

12. **TERMINATION FOR LACK OF REQUIRED COVERAGE.** If Contractor, for any reason, fails to have in place, at all times during the term of this Contract, including any extension hereto, all required insurance and coverage, City may immediately obtain such coverage at Contractor's expense and/or terminate this Contract. Contractor shall indemnify, defend and hold harmless City and its elected and appointed officers, employees, agents and volunteers from any claim resulting from failure of either Contractor or any subcontractor to take out or maintain any insurance required by this Contract.

13. **EQUIPMENT COVERAGE**. Any policy or policies of insurance Contractor or his subcontractors elect to carry as insurance against loss or damage to construction equipment and tools or other personal property shall include a provision waiving the insurer's right of subrogation against City.

GENERAL PROVISIONS

GARDENA COMMUNITY AQUATIC AND SENIOR CENTER
PROJECT NO. JN 978

PART 1 – GENERAL PROVISIONS

SECTION 1 – GENERAL

1-1 GENERAL. The Standard Specifications for Public Works Construction ("Greenbook") written and promulgated by the Southern California Chapter of the American Public Works Association and the Southern California Districts of the Associated General Contractors of California shall be the Standard/General Specifications (GP) of the City. All work shall conform to the 2021 edition, including supplements of the Standard Specifications, the Special Provisions which supplement or modify the Standard/Technical Specifications (TP), and the Standard Drawings as issued by the City (defined herein as "Agency") available at the time bids are opened unless otherwise specified in the Contract Documents.

The above referenced Standard Specifications, Special Provisions and Standard Drawings are hereby made a part of the Contract Documents.

For the convenience of the Contractor, the section and subsection numbering system used in these Special Provisions corresponds to that used in the Standard Specifications.

1-2 TERMS AND DEFINITIONS. Whenever in the Standard Specification the following terms are used, they shall be understood to mean and refer to the following:

(a)	AGENCY	The City of Gardena, a California municipal corporation.
(b)	BOARD	The City Council of the City of Gardena
(c)	CONTRACT DOCUMENTS	Documents including but not limited to the proposal forms, Standard "Greenbook" Specifications, Special Provisions, Technical Provisions, Notice Inviting Bids, Instructions to Bidders, Bonds, Insurance, Contract and all Addenda setting forth any modifications of the documents.
(d)	ENGINEER	The City of Gardena Director of Public Works/City Engineer or his authorized representative.
(e)	BIDDER	An individual, co-partnership, association or corporation submitting a proposal for the work contemplated, acting directly or through a duly authorized representative.
(f)	LEGAL ADDRESS OF CONTRACTOR	The legal address of the Contractor to be the address given on the Contractor's bid and is hereby designated as the place to which all notices, letters or other communications to the Contractor shall be mailed or delivered.
(g)	LABORATORY	An established laboratory approved and authorized by the Engineer for testing materials and work involved in the contract.

1-7 AWARD AND EXECUTION OF THE CONTRACT.

1-7.1 General. The proposal shall be fully executed and submitted on the forms provided by the Agency and shall be enclosed in a sealed envelope marked and addressed as directed in the "Notice Inviting Bids".

If the proposal is made by an individual, it shall be signed and his or her full name and address shall be given; if it is made by a firm it shall be signed with co-partnership name by a general partner thereof, who shall also sign his or her known name, and the name and address of each member of such co-partnership shall be given; if made by a corporation, the name of the corporation shall be signed by its duly authorized officers and attested by the corporate seal.

Bidders are warned against making erasures or alterations of any kind on their Proposal. Proposals which contain omissions, erasures, alterations, conditions or additions not called for may be rejected.

At the time the Contract is awarded by the Agency, the Contractor shall be licensed under the provisions of Chapter 9, Division 3, of the Business and Professions Code of the State of California to do the type of work contemplated in the Contract and shall be skilled and regularly engaged in the general class or type of work required by this Contract.

1-7.2 Contract Bonds. The "Performance Bond" is equivalent to City's "Faithful Performance Bond".

1-7.3 Examination of Plans, Specifications and Project Site. Bidders shall read the specifications, review the drawings and examine the existing facilities to fully understand the project in order to plan for the improvements as shown in the contract, including local condition, uncertainty of weather and all other contingencies.

Bidders shall satisfy themselves by personal examination of the proposed work sites, and by such other means as they may choose as to actual conditions and requirements and as to the accuracy of the quantities stated in the Proposal forms. Information derived from the maps, plans, specifications, profiles, drawings, or from the Engineer/Architect of the record, shall not relieve the bidder of this responsibility, and the interpretation of the data disclosed by borings or other preliminary investigations is not guaranteed nor is any liability assumed by the Agency.

1-7.4 Interpretation of Drawings and Documents. If a prospective bidder is in doubt as to the true meaning or intent of any part of the Contract Documents including the Specifications, or discovers discrepancies in, or omissions from, the Specifications or Drawings, he may submit to the Engineer a written request for an interpretation or a correction thereof. Interpretations or corrections of the Contract Documents including the Specifications and Drawings, shall be made only by addendum duly issued by the Engineer, and a copy of such addendum will be sent by certified mail, postage prepaid, or delivered to each person receiving a set of the Contract Documents whose address is known to the Engineer and such addendum shall be considered a part of and incorporated in the Contract Documents.

1-7.5 Award of Contract. After the Proposals have been publicly opened and read aloud, they will be checked for accuracy and compliance with all provisions as specified herein.

The Agency reserves the right to reject any or all bids and to waive any informality or irregularity in any bid received and to be the sole judge of the merits of the respective bids received.

Bids subsequently shown to be mathematically unbalanced would be rejected as nonresponsive.

A mathematically unbalanced bid is one containing lump sum or unit bid items which do not reflect reasonable actual costs plus a reasonable proportionate share of the bidder's anticipated profit, overhead costs, and other indirect costs, which he/she anticipates for the performance of the items in question.

"A bid is mathematically unbalanced if the bid is structured on the basis of nominal prices for some work and inflated prices for other work; that is, each element of the bid must carry its proportionate share of the total cost of the work plus profits."

"A bid is materially unbalanced if there is a reasonable doubt that award to the bidder submitting the mathematically unbalanced bid will result in the lowest ultimate cost to the Government. Consequently, a materially unbalanced bid may not be accepted."

Award of the Contract, if it be awarded, will ordinarily be made by the Agency within 30 days after opening of the bids. Award will be made to the lowest responsive responsible bidder.

In selecting the lowest responsive responsible bidder, consideration will be given to the general competency of the bidder for the performance of the work covered by the proposal. To receive favorable consideration, a bidder may be required to present evidence that he has successfully performed similar work of comparable magnitude or submit other evidence satisfactory to the Agency that he or his associates are competent to manage the proposed undertaking and to carry it forward to a successful conclusion. Professional integrity and honesty of purpose shall be essential requirements. A showing of adequate financial resources may be required but will not alone determine whether a bidder is competent to undertake the proposed work.

Only manufacturers or contractors of established reputation, or their duly authorized dealers or agency, having proper facilities for the manufacture of the materials or equipment and for servicing same, or for proper execution of the work called for in the contract, will be considered in making the award.

1-7.6 Execution of Contract. A bidder whose proposal is accepted shall properly sign a written contract with the Agency on the form attached hereto and return said contract together with good and approved bonds and insurance certificates as required by the Contract Documents **within twenty-one (21) calendar days** from the date of the mailing of a notice from the Agency to the bidder, according to the address given by him, of acceptance of his proposal.

Contract bonds and certificates of insurance, if required, shall be filed in all instances before delivering any equipment, materials, or performing any work under the contract; also before any purchase order shall be issued. An executed Power of Attorney form shall be submitted with all contract bonds herein specified.

If a bidder whose proposal is accepted fails or refuses to enter into a contract as herein provided, or to conform to any stipulated requirement in connection therewith, the money represented by his check or bidder's bond shall be refunded less the difference between the low bid and the bid of the bidder with whom the Agency enters into an agreement in accordance with the provisions of the Public Contracts Code Section 20174. At the discretion of the Agency, an award may be made to the bidder whose proposal is next most acceptable to the Agency, and such bidder and his surety shall fulfill every stipulation embraced herein as if he were the party to whom the first award was made.

A corporation to which an award is made may be required before the contract is finally signed to furnish evidence of its corporate existence, of its right to do business in California and of the authority of the officer signing the contract and bonds for the corporation to so sign.

1-7.7 Return of Proposal and Guarantee. The check or bond of a bidder to whom the contract has been awarded will be returned to him after all of the acts, for the performance of which said security is required, have been fully performed. The checks or bid bonds of the second and third lowest bidders will be returned when the bidder to whom the contract has been awarded has properly executed all of the required Contract Documents. Check or bid bonds of other bidders will be returned when their proposals are rejected or in any event at the expiration of forty-five (45) days from the date of opening bids.

1-7.8 Precedence of Contract Documents. The order of precedence of contract document shall be:

FIRST	Requirements of law, including the Code and Ordinances of the City of Gardena.
SECOND	Permits from other agencies as may be required by law.
THIRD	Permits from City of Gardena Departments as may be required by law or ordinance.
FOURTH	The Contract.
FIFTH	The Bid Proposal.
SIXTH	Addenda.
SEVENTH	Notice Inviting Bids.
EIGHTH	Instructions to Bidders.
NINTH	Technical Provisions.
TENTH	Plans.
ELEVENTH	General Provisions of the Standard Specifications.
TWELFTH	Standard Plans.
THIRTEENTH	Standard Specifications for Public Works Construction (current edition).
FOURTEENTH	Caltrans Standard Plans and Specifications.
FIFTEENTH	Reference Specifications.

Change orders, supplemental agreements and approved revisions to Plans and Specifications will take precedence over documents listed above, except those listed as FIRST, SECOND and THIRD. Detailed plans shall have precedence over general plans.

SECTION 2 – SCOPE OF THE WORK

2-2 PERMITS. The Contractor will obtain, at no cost to the Agency, all permits necessary to perform the work on streets, highways, railways, on-site or other rights-of-ways, with the exception that the City's Community Development and Public Works fees are waived. The Contractor shall obtain and pay for all costs incurred for permits necessitated by its operations

such as, but not limited to those permits required for night work, overload, blasting and demolition. For private contracts, the Contractor shall obtain all permits incidental to the work or made necessary by its operations, and pay all costs incurred by the permit requirements.

The Contractor and each subcontractor employed upon the work must have or obtain a valid City of Gardena Business License in accordance with the provisions of the Gardena Municipal Code and the fees are not waived.

The project is subject to permits from the Gardena Community Development Department, Gardena Public Works, LA County of Health, LA County of Fire and LA County of Public Works (Industrial Waste). The Contractor is to acquire all applicable project construction permits and deferred submittals & approvals. The permit costs will be borne by the Contractor with the exception of City required construction permits.

All jurisdictional plan checks have been completed and approved except for deferred submittals.

2-5 THE CONTRACTOR'S EQUIPMENT AND FACILITIES.

2-5.2 Temporary Utility Services. The Contractor shall, at its own expense, make all arrangements necessary for the provision of temporary utility services necessary for its own use during performance of the work. This includes temporary power services to facilitate the field office (Section 8-2).

The existing pool and its facility building have already been demolished by others. However, there is one existing water lateral with valve that has not been abandoned (See demo plans for more details). Therefore, if the Contractor wishes to utilize the existing/active water service on the construction site (Lot 12) prior to the required demolition/abandonment, the City will continue to cover the existing water bills until it is disconnected.

2.10 DISPUTED WORK.

2.10.1 Retention of Imperfect Work. If any portion of the work done or materials furnished under the contract proves defective or not in accordance with the specifications and contract drawings, and if the imperfection in the same is not of sufficient magnitude or importance to make the work dangerous or undesirable, or if the removal of such work is impracticable or will create conditions which are dangerous or undesirable in the opinion of the Engineer, the Engineer shall have the right and authority to retain the work instead of requiring it to be removed and reconstructed, but he shall make deductions therefor in the payment of the contract item due Contractor as may be just and reasonable.

2-11. DISPUTE RESOLUTION.

2-11.1 Requests for Contract Adjustments and Relief. If either Contractor or the Agency believes that it is entitled to relief against the other for any event arising out of or related to the work or Project, such party shall provide written notice to the other party of the basis for its claim for relief. Such notice shall, if possible, be made prior to incurring any cost or expense and in accordance with any specific notice requirements contained in the applicable sections of this Contract.

In the absence of any specific notice requirement, written notice shall be given within a reasonable time, not to exceed fourteen (14) days, after the occurrence giving rise to the claim for relief or after the claiming party reasonably should have recognized the event or condition giving rise to the request, whichever is later. Such notice shall include sufficient information to advise the other party of the circumstances giving rise to the claim for relief, the specific contractual adjustment or relief requested and the basis of such request.

2-11.2 Dispute Avoidance and Resolution. The parties are fully committed to working with each other throughout the Project and agree to communicate regularly with each other at all times so as to avoid or minimize disputes or disagreements. If disputes or disagreements do arise, Contractor and the Agency each commit to resolving such disputes or disagreements in an amicable, professional and expeditious manner so as to avoid unnecessary losses, delays and disruptions to the work under the Contract.

Contractor and the Agency will first attempt to resolve disputes or disagreements at the field level through discussions between Contractor's Representative and the Engineer.

If a dispute or disagreement cannot be resolved through the Contractor's Representative and the Engineer, Contractor's Chief Executive Officer or similar senior representative and the Gardena City Manager, or designee, upon the request of the other party, shall meet as soon as conveniently possible, but in no case later than twenty (20) days after such a request is made, to attempt to resolve such dispute or disagreement. Prior to any meeting between the parties' senior representatives, the parties will exchange relevant information that will assist the parties in resolving their dispute or disagreement.

If, after meeting, the senior representatives determine that the dispute or disagreement cannot be resolved on terms satisfactory to both parties, the parties may submit the dispute to binding or non-binding mediation. The mediation shall be conducted in any manner and by any person or mediation association mutually acceptable to the parties.

2-11.3 Arbitration. Any claims, disputes or controversies between the parties arising out of or relating to the Contract, or the breach thereof, which have not been resolved in accordance with the procedures set forth in Section 9-4.2 above may be decided by binding or non-binding arbitration. The arbitration shall be conducted in any manner and by any person or arbitration association mutually acceptable to the parties.

2-11.4 Claims Disputes. Any claims of Contractor, as "claims" are defined in California Public Contract Code Section 9204 shall be processed in accordance with that section. Section 9204 provides in relevant part that upon receiving a claim from a contractor, together with reasonable documentation to support the claim, a contracting public entity shall conduct a reasonable review of the claim and, within a period not to exceed 45 days [except as otherwise provided in Section 9204], shall provide the claimant a written statement identifying what portion of the claim is disputed and what portion is undisputed.

Any payment due on an undisputed portion of the claim shall be processed and made within 60 days after the public entity issues its written statement. If the public entity fails to issue a written statement, Section 9-4.3 shall apply. If the contractor disputes the public entity's written response, or if the public entity fails to respond to a claim within the time prescribed, the contractor may demand in writing an informal conference to meet and confer for settlement of the issues in dispute.

Upon receipt of a demand in writing sent by registered mail or certified mail, return receipt requested, the public entity shall schedule a meet and confer conference within 30 days for settlement of the dispute. Within 10 business days following the conclusion of the meet and confer conference, if the claim or any portion of the claim remains in dispute, the public entity shall provide the claimant a written statement identifying the portion of the claim that remains in dispute and the portion that is undisputed.

Any payment due on an undisputed portion of the claim shall be processed and made within 60 days after the public entity issues its written statement. Any disputed portion of the claim of the claim, as identified by the contractor in writing, shall be submitted to nonbinding mediation, with

the public entity and the contractor sharing the associated costs equally. The public entity and contractor shall mutually agree to a mediator within 10 business days after the disputed portion of the claim has been identified in writing. If the parties cannot agree upon a mediator, each party shall select a mediator and those mediators shall select a qualified neutral third party to mediate with regard to the disputed portion of the claim. Each party shall bear the fees and costs charged by its respective mediator in connection with the selection of the neutral mediator. If mediation is unsuccessful, the parts of the claim remaining in dispute shall be subject to other applicable procedures.

2-13 DRAWINGS AND SPECIFICATIONS ("RECORD" DRAWINGS). At all times, the Contractor shall maintain at the project a "Record" set of Drawings and Specifications to include all executed addenda, change orders, and field orders.

Prior to each progress payment the Contractor shall deliver to the Engineer, a set of contract drawings with all applicable "as constructed" notes placed/recorded thereon. Failure to provide "as constructed" plans will cause progress payment to be withheld until information is provided to City.

After completion of the work and before final payment, the Contractor shall deliver to the Engineer a complete set of contract drawings with all applicable "as constructed" noted placed/record thereon. The final form and detail of these as constructed plans are subject to the acceptance of the Engineer.

2-14 MARKING REMOVAL. All markings placed by the Contractor, City, and Underground Service Alert (USA) during construction shall be removed at the completion of the work. These markings shall include, but not limited to, paint, stakes, and metal tags.

All cost associated with removal of markings shall be included in the bid prices for the applicable bid items. Failure of the Contractor to remove these markings shall be cause for the City to do the work and withhold the costs from the Contractor's final payment.

SECTION 3 – CONTROL OF THE WORK

3-2 SELF-PERFORMANCE. The requirement of the prime/general Contractor to self-performance at least 50% of the contract price shall be eliminated; therefore, there is no minimum requirement.

3-5 INSPECTION. Inspection shall be made once a day for areas ready for inspection. Areas or items that fail inspection or that are not ready for inspection shall be rescheduled by the contractor.

Inspection of the work shall not relieve the contractor of the obligation to fulfill all conditions and requirements of the contract.

3-6 THE CONTRACTOR'S REPRESENTATIVE. The Contractor shall furnish the Engineer with the name, address and cell/ business/home telephone numbers of the person responsible for the maintenance of barricades, traffic control signs, lights and other safety devices.

3-10 SURVEYING.

3-10.3 Line and Grade. Unless otherwise provided in the Technical Provisions, establishing lines and grades for construction shall be the responsibility of the Contractor, with the following provisions:

All work under this contract shall be built in accordance with the lines and grades shown on the plans. Field survey for establishing these, and for the control of construction, shall be the responsibility of the Contractor. All such surveys, including construction staking, shall be performed on all items ordinarily requiring grade and alignment, at intervals normally accepted by the agencies and trade involved.

The Contractor shall provide a copy of the office calculations and grade sheets to the Agency's Inspector. The Contractor shall be responsible for any error in the finished work, and shall notify the Engineer within 24 hours of any discrepancies or design errors discovered during staking.

Unless a separate bid item is provided, the payment for surveying, construction staking, professional services, office calculations, furnishing all labor, materials, equipment, tools and incidentals, and for doing all work involved shall be considered as included in the various items of work, and no additional compensation will be allowed therefor.

3-10.4 Permanent Survey Markers. The Contractor is required to locate and tie out survey monuments in the project area prior to construction involving street and highways, or City public right of way and to file with the County Surveyor a Corner Record of any such work. Prior to final payment and the issuance of a completion certificate, the Contractor is required to file a Corner Record for survey monumentation that is replaced. All such survey work shall be performed under the supervision of a California licensed Land Surveyor or a Civil Engineer authorized to perform such work.

The Contractor shall provide the Agency a copy of the office calculations and documents submitted to the County for filing in connection with the aforementioned work.

The payment for surveying, related professional services, office calculation, furnishing all labor, materials, equipment, tools and incidentals, and for doing all work involved shall be considered as included in the various items of work, and no additional compensation will be allowed therefor.

3-12 WORK SITE MAINTENANCE.

3-12.1 General. The Contractor shall keep the work site clean and free from rubbish and debris. The Contractor shall abate dust nuisance by cleaning, sweeping and sprinkling with water in keeping with the AQMD and NPDES requirements. Debris, soil or other matter shall not be washed into storm drains but shall be collected and disposed of in a legal, responsible manner. The construction area shall be cleaned with a power sweeper at the end of every workday and when deemed necessary by the Engineer.

The Contractor shall maintain drainage within and through the work areas. Earth dams will not be permitted in paved areas. Use temporary sandbags to control the site perimeter. At the completion of the project sandbags shall become the property of the City of Gardena and shall be remain in place.

The Contractor shall not spill on haul routes. Any such spillage shall be removed immediately, and the area cleaned.

Stockpiling of construction materials or debris on City right-of-way shall be in accordance with the NPDES permit and shall be approved by the inspector. At the completion of work, the Contractor shall thoroughly clean all work areas.

3-12.2 Air Pollution and Surface Maintenance Control. The Contractor shall obtain a construction water meter from Golden State Water including required deposit and fees. The Contractor shall pay for the water used, at the current water rates. All arrangements for

construction water shall be made by contractor with Golden State Water at Contractor expense.

3-12.4. Storage of Equipment and Material.

3-12.4.1 General. All costs associated with the disposal of all excavated or demolition materials, including any gate fees, shall be paid by the Contractor. These costs shall be included in the bid price for the applicable bid items.

Prior to any excavated or demolition material being removed from the construction site the Contractor shall notify the City as to the hauling route and destination for disposal. If the location for disposal is other than a county landfill then the Contractor shall provide the City with written permission and release of liability for the City from the owner of the property where the material will be deposited.

The City has an exclusive agreement with Waste Resources, Inc. and no other firm may provide bulk trash bins in the event the work requires this service.

3-12.4.2 Storage in Public Streets. Construction equipment shall not be stored at the construction site, any public street or publicly owned facilities without approval of the City. Contractor shall store equipment at a contractor's rental yard.

All excavated material that is to be hauled to and disposed of at a County landfill site by the Contractor is subject to a County gate fee based on tonnage.

3-12.5.4 Protection and Restoration of Existing Improvements. Any facilities, structures, water lines, landscaping, surfaces, signs, pavement markings, painted curbs, house numbers, etc., which are damaged during construction shall be restored to the satisfaction of the City. Damaged water lines shall be repaired immediately at no additional cost to the city.

3-12.5.5 Access to Private Property. The Contractor shall be aware that business and residential access must be maintained at all times. The Contractor shall schedule operations to minimize interference with access to private property.

The main access way to any business or home shall not be completely blocked for more than one four-hour period a day except blockage shall be limited to one twenty-four (24) hour period when concrete is poured.

Temporary access ways shall be provided from the street to the main access way of all businesses and homes by use of traffic rated steel plates or any other method approved by the city.

Payment for this item shall be included in the applicable contract work item.

3-13 COMPLETION, ACCEPTANCE, AND WARRANTY.

3-13.3 Warranty. In addition to the guarantees as required in Section 1-7.2 and 3-13.3 of the Standard Specifications, the Faithful Performance Bond shall remain in full force and effect for a period of one year after acceptance of the work by the Agency to insure that defects, which may appear within said period, will be repaired, replaced, or corrected by the Contractor, at his own cost and expense, to the satisfaction of the Engineer within thirty (30) days after written notice thereof by the Agency.

SECTION 4 – CONTROL OF MATERIAL

4-1 GENERAL.

4-1.1 Warranty of Title. No materials, supplies or equipment for the work under this Contract shall be purchased subject to any chattel mortgage or under a conditional sale contract or other agreement by which an interest therein or any part thereof is retained by the seller or supplier.

The Contractor warrants clear and good title to all materials, supplies and equipment installed and incorporated in the work, and agrees upon completion of all work to deliver the premises, together with all improvements and appurtenances constructed or placed thereon by him to the Agency free from any claims, liens, encumbrances or charges, and further agrees that neither he nor any person, firm or corporation furnishing any material or labor for work covered by the Contract shall have any right to a lien upon the premises or any improvement or appurtenance thereon; provided, that this shall not preclude the Contractor from installing metering devices or other equipment of utility companies the title of which is commonly retained by the utility company. Nothing contained in this section, however, shall defeat or impair the right of such persons furnishing materials or labor under any bond given by the Contractor for their protection, or any right under any law permitting such persons to look to funds due the Contractor, which are in the hands of the Agency.

The provisions of this section shall be inserted in all subcontractor's and material contracts, and notice of its provisions shall be given to all persons furnishing materials for the work when no formal contract is entered into regarding such materials.

SECTION 5 – LEGAL RELATIONS AND RESPONSIBLITIES

5-4 INSURANCE. In lieu of Section 5-4 of the Standard Specifications, refer to the City Contract Documents Section, CD-10, for detail requirements.

5-5 ANTITRUST CLAIMS. By entry into this Contract, Contractor hereby acknowledges the terms of Section 7103.5 of the Public Contract Code and hereby offers and agrees to assign to the Agency all rights, title and interest in all causes of action it may have as outlined above.

5-7 SAFETY.

5-7.4 Hazardous Substances. As required by Public Contract Code Section 7104, if this Contract involves digging trenches or other excavations that extend deeper than four (4) feet below the surface, Contractor shall promptly, and prior to disturbance of any conditions, notify the Agency of: (1) any material discovered in excavation that Contractor believes to be a hazardous waste that is required to be removed to a Class I, Class II or Class III disposal site; (2) subsurface or latent physical conditions at the site differing from those indicated by the Agency; and (3) unknown physical conditions of an unusual nature at the site, significantly different from those ordinarily encountered in such contract work. Upon notification, the Agency shall promptly investigate the conditions to determine whether a change order is appropriate. In the event of a dispute, Contractor shall not be excused from any scheduled completion date and shall proceed with all work to be performed under the Contract but shall retain all rights provided by the Contract and by law for making protests and resolving the dispute.

5-7.4.1 Edison Energized Conductors. Contractor hereby promises and agrees that in the performance of the work specified in this Contract, it will employ and utilized only qualified persons, as hereinafter defined, to work in proximity to Edison's secondary, primary and transmission facilities. The term "qualified person" is defined in Title 8, California Administrative Code, Section 2700, as follows:

"Qualified Person: A person who by reason of experience or instruction is familiar with

the operation to be performed and the hazards involved."

Contractor further promises and agrees that the provisions of this section shall be and are binding upon any subcontractor or subcontractors that may be retained by it, and that Contractor shall take such steps as are necessary to assure compliance by said subcontractor or subcontractors with the requirements of this section.

5-7.4.2 Emergency Provisions. Unusual conditions may arise on the work which will require that immediate and unusual provision be made to protect the public from danger or loss or damage to life and property, due directly or indirectly to the prosecution of the work, and it is part of the service required of the Contractor to make such provisions and to furnish such protection.

Whenever, in the opinion of the Agency, an emergency exists of which the Agency is aware and against which the Contractor has not taken sufficient precaution for the safety of the public or the protection of utilities or of adjacent structures or property which may be injured by the progress of construction; and whenever, in the opinion of the Agency, immediate action shall be considered necessary in order to protect public or private personnel or property interests, or prevent likely loss of human life or damage on account of the operations under the Contract, then in that event the Agency may provide suitable protection to said interests by causing such work to be done and material to be furnished, as in the opinion of the Agency may seem reasonable and necessary, all at the expense of the Contractor.

SECTION 6 – PROSECUTION AND PROGRESS OF THE WORK

6-1 CONSTRUCTION SCHEDULE AND COMMENCEMENT OF THE WORK

6-1.1 Construction Schedule. The Contractor's proposed construction schedule shall be submitted to the Engineer prior to the preconstruction meeting. Any schedule for long lead items shall be accompanied by written statements from each supplier or equipment indicating an anticipated schedule of delivery.

The Contractor shall include in his bid all costs to perform the work under this contract in stages. The Contractor shall begin and complete work in each stage prior to starting work in subsequent stages unless previous permission is obtained from the Engineer. The contractor shall stage the work to allow parking on the next adjacent streets. Restricting parking on multiple adjoining streets shall require approval of the engineer.

6-1.2 Commencement of the Work. City may establish a Notice to Proceed (NTP) date no later than thirty (30) calendar days after the date of the contract execution. Prior to issuing the Notice to Proceed, the Engineer will schedule a preconstruction meeting with the Contractor to review the proposed construction schedule and delivery dates, arrange utility coordination, discuss construction methods and clarify inspection procedures.

The names, addresses and telephone numbers of the Contractor and subcontractors, or their representatives, shall be filed with the Public Works Manager and the County Sheriff's Department or the City Police Department prior to beginning work.

The Contractor shall also notify the City of Gardena and the owners of all utilities and substructures within the Project area not less than 48 hours prior to starting construction. The following utility companies list of names and telephone numbers is intended for the convenience of the contractor and is not guaranteed to be complete or correct:

COMPANY	***CONTACT***	***TELEPHONE NO.***

Southern California Edison	Joshua Remlio (Planner) Ron Whitaker (Inspector)	562.756.3241 310.710.9606
Southern California Gas	Melissa Fukunaga: Tech Services Planning: Attn - Lead Planner	213.231.7281
AT&T	Craig Chinen	310.408.4518
Gardena Police	Dispatch	310.3237911
L.A. County Fire Dept.		310.323.7911
Charter Communications	Jose Ortiz	310.429.3459
Crown Castle	Hector Aguilera	951.454.5111
Waste Resources of Gardena	Lorena Rodriguez	310.366.7600
Golden State Water Co.	Conde Ventura	310.436.6950 x107
	Joseph Salcido	310.660.0320 x101
L.A. County Flood Control	Daryll Chenoweth	626.458.3129
L.A. Sanitation District	Jon Ganz	562.908.4288
Metropolitan Water District	Civil Eng. Substructures Section	213.217.7059
Chevron Pipeline	Dave Zerler	310.669.4014
Underground Service Alert		800.422.4133

The Contractor shall submit periodic Progress reports to the Engineer by the tenth day of each month. The report shall include an updated Construction Schedule. Any deviations from the original schedule shall be explained. Progress payments will be withheld pending receipt of any outstanding reports.

6-1.3 Working Day. The Contractor's working hours shall be limited to the hours between 7:30 A.M. and 4:30 P.M., Monday through Friday except holidays. No work which will cause loud or disruptive noise to adjacent residents and "No Parking" enforcement shall begin prior to 8:00 a.m. nor terminate later than 4:30 p.m. Deviation from normal working hours will not be allowed unless written permission has been duly obtained beforehand from the office of the City Engineer. The Contractor shall provide adequate light for proper prosecution of the work, for the safety of the workmen and the public, and for proper inspection.

If the Contractor works beyond the allowed working hours without prior written approval from the Engineer, the Contractor may be charged Five Hundred ($500) for each occurrence as required by the Engineer. The amount will be deducted from a progress payment or bond.

Contractor hereby acknowledges and shall be required to comply with the provisions of California Labor Code Section 1810 et seq. According to those sections, eight (8) hours of labor shall constitute a legal day's work. Contractor shall pay to the Agency a penalty of Twenty-Five Dollars ($25.00) for each worker employed in the execution of this Contract by Contractor, or by any Subcontractor, for each calendar day during which such worker is required or permitted to work more than eight (8) hours in any calendar day or forty (40) hours in any one (1) calendar week, except when payment for overtime is made at not less than one and one-half (1-1/2) times the basic rate for that worker.

In the event of either a requested or emergency deviation, inspection service fees will be charged against the Contractor. The service fees will be calculated at overtime rates including benefits, overhead and travel time. The service fees will be deducted from any amounts due to the Contractor.

6-1.4 Notice and Service Thereof. Any notice required or given by one party to the other under the contract shall be in writing and shall be dated and signed by the party giving such notice or by a duly authorized representative of such party. Any such notice shall not be effective for any purpose whatever unless served in the following manner:

Notice shall be given to the Agency by personal delivery thereof to the City of Gardena Engineer or by depositing the same in the United States mail enclosed in a sealed envelope, registered and with postage prepaid, addressed to:

Public Works Department
City of Gardena
1717 W. 162nd Street
Gardena, CA 90247-3778

Notice shall be given to the Contractor by personal delivery thereof to said Contractor or to his authorized representative at the site of the project, or by depositing the same in the United States mail, enclosed in a sealed envelope addressed to said Contractor at the address established for the conduct of the work under this Contract, postage prepaid and registered.

Notice shall be given to the Surety, or any other person, by personal delivery to said Surety or other person, or by depositing the same in the United States Mail, enclosed in a sealed envelope addressed to such Surety or persons at the address of said Surety or persons last communicated to the party giving the notice, postage prepaid and registered.

Notification of Property Owners and Tenants - The Contractor shall notify each property owner and/or tenant in the project area (See Appendix C) in writing five (10) working days prior to the start of construction. If pedestrian or vehicular access to private property is to be blocked, the Contractor shall again notify each property owner and/or tenant in writing five (5) working days prior to construction activities. The Contractor shall provide additional notices when a lapse time occurs during each phase/segment work.

The written notice shall be submitted to the Engineer for approval prior to being delivered.

6-2 PROSECUTION OF THE WORK.

6-2.1 Contractor's Responsibility for Work. Until the formal acceptance of the work by the Agency, the Contractor shall have the charge and care thereof and shall, subject to the insurance protection furnished in accordance with the Section 1-7.6 and 5-4 hereof, bear the risk of accident, loss or damage to any part thereof by action of the elements or from any other cause, whether arising from the execution or from the non-execution of the work. The Contractor shall rebuild, repair, restore and otherwise correct damages to any portion of the work occasioned by any of the above causes before its acceptance.

In case of suspension of work from any cause whatsoever, the Contractor shall be responsible for all materials and the proper temporary storage thereof.

6-3 TIME OF COMPLETION.

6-3.1 General. The contract time shall begin per the City's written notification. Work must be completed within working days specified for the project. In addition, the Contractor shall notify the City 24 hours in advance of the actual commencement of work.

No work shall be undertaken during the City's holiday closures. It is the Contractor's

responsibility to determine the City's closure dates.

6-9 LIQUDATED DAMAGES. The amount of liquidated damages is hereby amended to **$5,000** for each consecutive calendar day.

SECTION 7 – MEASUREMENT AND PAYMENT

7-1 MEASUREMENT OF QUANTITIES FOR UNIT PRICE WORK.

7-1.2 Method of Measure. The quantities shown on the Bid Schedule are approximate only. The Contractor will be paid for the actual quantities of work based on approved field measurements as provided for in these Specifications. The City reserves the right to increase or decrease the amount of any item or portion of work to be performed or materials furnished, or to delete any item, in accordance with the Specifications. Additional bid item work shall be completed within the total working days in these specifications. Additional working days may be allowed with the approval of the engineer.

The Contractor shall provide Schedule of Value prior to pre-construction meeting for lump sum bid items.

Any conflict between the listed bid schedule and/or schedule of values versus actual quantities will be addressed during construction by either increasing or decreasing the payment per bid unit price/schedule of values and the GREENBOOK Section 2-7.

7-3 PAYMENT.

7-3.2 Partial and Final Payment. The Engineer will authorize monthly partial/progress payments per Section 7-3.2 of the Standard Specifications. Contractor's monthly invoice shall be submitted on company letterhead. Each invoice submitted shall include: project name, date of invoice, progress payment number, and purchase order number. All bid items shall be included on each invoice and include unit, unit price bid, original quantity, amount, previous payment quantity and amount, current invoice payment quantity and amount, total project payment quantity and amount. In addition, any approved change orders shall be listed on invoice. Payment to Contractor typically takes 30 days from submittal of approved invoice. However, payments will be withheld pending receipt of any outstanding reports required by the Contract Documents.

7-3.3 Delivered Materials. The City will NOT honor or make any progress payments for materials ordered and delivered to the job site by the Contractor unless prior approval is obtained from the Engineer.

7-4 PAYMENT FOR EXTRA WORK.

7-4.3 EXTRA WORK. When work is performed on a "time and materials" basis, the following percentages shall be added to the Contractor's cost and shall constitute the markup for all overhead and profits:

1) Labor 20
2) Materials 15
3) Equipment Rental 15
4) Other Items and Expenditures 15

To the sum of the costs and markups provided for in this section, 1 percent shall be added as compensation for bonding.

When all or any part of the extra work is performed by a Subcontractor, the markup established above shall be applied to the Subcontractor's actual cost of such work. A markup of 10 percent on the first $5,000 of the subcontracted portion of the extra work and a markup of 5 percent on work added in excess of $5,000 of the subcontracted portion of the extra work may be added by the Contractor.

SECTION 8 – FACILITIES FOR AGENCY PERSONNEL

8-2 FIELD OFFICE FACILITIES. The Contractor shall provide the class of field office indicated below:

☐ Class "A" ☐ Class "B" ☒ Class "C"

In the event none of the boxes are marked above, no specific field office will be required, and the use therefore of any field office will be at the Contractor's discretion. The location of any field office shall be as provided on the plans, in these Specifications or as designated by the Engineer.

END OF GENERAL PROVISIONS

TECHNICAL PROVISIONS (GREENBOOK)

TABLE OF CONTENTS

PART 2 - CONSTRUCTION MATERIALS (Page TP-1)

SECTION 200 ROCK MATERIALS
SECTION 201 CONCRETE, MORTAR AND RELATED MATERIALS
SECTION 202 MASONRY MATERIALS
SECTION 203 BITUMINOUS MATERIALS
SECTION 204 LUMBER AND TREATMENT WITH PRESERVATIVES (NO CHANGE)
SECTION 205 PILES (NO CHANGE)
SECTION 206 MISCELLANEOUS METAL ITEMS (NO CHANGE)
SECTION 207 GRAVITY PIPE
SECTION 208 PIPE JOINT TYPES AND MATERIALS (NO CHANGE)
SECTION 209 PRESSURE PIPE
SECTION 210 PAINT AND PROTECTIVE COATINGS
SECTION 211 MATERIAL TESTS
SECTION 212 WATER AND SEWER SYSTEM VALVES AND APPURTENANCES
SECTION 213 ENGINEERING GEOSYNTHETICS (NO CHANGE)
SECTION 214 TRAFFIC STRIPING, CURB AND PAVEMENT MARKINGS, AND PAVEMENT MARKERS
SECTION 215 PRECAST REINFORCED CONCRETE MANHOLES (PRCMH)(NO CHANGE)
SECTION 216 PRECAST REINFORCED CONCRETE BOX (NO CHANGE)
SECTION 217 BEDDING AND BACKFILL MATERIALS (NO CHANGE)

PART 3 - CONSTRUCTION METHODS (Page TP-16)

SECTION 300 EARTHWORK
SECTION 301 SUBGRADE PREPARATION, TREATED MATERIALS AND PLACEMENT OF BASE MATERIALS
SECTION 302 ROADWAY SURFACING
SECTION 303 CONCRETE AND MASONRY CONSTRUCTION
SECTION 304 METAL FABRICATION AND CONSTRUCTION
SECTION 305 PILE DRIVING AND TIMBER CONSTRUCTION (NO CHANGE)
SECTION 306 OPEN TRENCH CONDUIT CONSTRUCTION
SECTION 307 JACKING AND TUNNELING (NO CHANGE)
SECTION 308 MICROTUNNELING (NO CHANGE)
SECTION 309 MONUMENTS (NO CHANGE)
SECTION 310 PAINTING
SECTION 311 SPECIAL PROTECTIVE MATERIALS (NO CHANGE)
SECTION 314 TRAFFIC STRIPING, CURB AND PAVEMENT MARKINGS, AND PAVEMENT MARKERS

PART 6 – TEMPORARY TRAFFIC CONTROL (Page TP-45)
SECTION 600 ACCESS
SECTION 601 TEMPORARY TRAFFIC CONTROL FOR CONSTRUCTION AND MAINTENANCE WORK ZONES

PART 8 – LANDSCAPING AND IRRIGATION (Page TP-47)
SECTION 800 MATERIALS
SECTION 801 INSTALLATION

TECHNICAL PROVISIONS (GREENBOOK)

PREFACE: All work and materials shall conform to the "Standard Specification for Public Works Construction", 2021 edition, except as modified by the contract and these Technical Provisions.

Incidental Work - All work and materials required by the plans and specifications, and not specifically listed in the bid schedule items of work, shall be considered incidental and no additional payment shall be made therefore. Incidental items shall include, but not be limited to, mobilization; implementation of the SWPPP and Best Management Practices for the protection of storm drain structures; adjusting utility access covers to grade; saw cutting; excavation and disposal of materials; survey; traffic control and coordination of utilities.

PART 2 - CONSTRUCTION MATERIALS

SECTION 200 - ROCK PRODUCTS

200-1 ROCK PRODUCTS

200-1.1 General

Aggregate base material for all asphaltic concrete and concrete paving shall be per *Geotechnical Investigation Proposed Community Aquatic and Senior Center* by **Southern California Geotechnical dated November 18, 2021. See Appendix A.**

200-1.4 Coarse Aggregate for Portland Cement Concrete

1. Non-Slip Aggregate: Fused aluminum oxide grits or crushed emery, factory graded, packaged rust proof.

200-2 UNTREATED BASE MATERIALS

200-2.1 General

Crushed Miscellaneous Base (CMB) shall be used as the untreated base material.

SECTION 201 - CONCRETE, MORTAR, AND RELATED MATERIALS

201-1 PORTLAND CEMENT CONCRETE

201-1.1 Requirements

201-1.1.1 General. Add the following below paragraph 7:

The cement utilized shall be Type II/V, per the project Geotech report. No substitution of materials shall be permitted. The Contractor shall furnish the Owner's Representative with a copy of the mix design to be used and with a legible certified weight-master's certificate for each load of P.C.C. delivered to the project. Portland Cement Concrete delivered to the project site having a water content and/or slump greater than that specified in the mix design shall be rejected and removed from the project site.

Contractor shall retain the services of a qualified State of California licensed civil engineer to provide a concrete mix design for each class of concrete in accordance with UBC Section 1905. Concrete mix design submittals shall bear the stamp and signature of the engineer approving the mix design as being consistent with project specifications and geotechnical report.

201-1.1.2 Concrete specified by class: The strength of concrete shall be **3,250 psi** for all concrete not otherwise specified with a maximum slump of four inches (4") for all concrete flatwork, walls, curb, gutter, walks, aprons, footings, foundations, sidewalks, access ramps, curbs and gutters, and cross gutters, mow curbs, columns, thrust blocks, seating, monument signs, etc. Portland cement concrete shall be Class 560-C-3250 unless shown otherwise on the plans.

201-1.1.3 **The Water Cement Ratio (W/C) shall be 0.50 maximum, per the project Geotech report.**

201-1.1. Concrete Specified by Compressive Strength

1. All material shall comply with the latest editions of the American Concrete Institute (ACI) and Uniform Building Code. Testing of Portland cement concrete shall apply to all site concrete including but not limited to: concrete paving, walls, footing, etc.

2. Product Data:

   a) Submit complete materials list of items proposed for the work. Identify material source.
   b) Submit admixture, curing compound, retarder, and accessory item product data.
   c) Submit material certificates for aggregates, reinforcing, and join fillers.

3. Submit concrete delivery tickets to Quality Control Manager. Show the following:

   a) Batch number
   b) Mix by class or sack content with maximum size aggregate
   c) Admixture
   d) Air content
   e) Slump
   f) Time of loading

4. Submit concrete test reports.

5. Owner will provide field quality control testing and inspection during concrete operations.

6. Contractor shall provide adequate notice, cooperate with, provide access to the work, obtain samples, and assist test agency and their representatives in execution of their function.

7. Strength Verification

Contractor should present mix design to Owner Inspector for approval prior to pour. Contractor shall provide copies of concrete tickets verifying the strength requirements for every truck load of concrete (see also item 3 above).

201-1.1.5 Test for Portland Cement Concrete
Concrete Installer

Contractor shall provide evidence to indicate successful experience in concrete placement and finishing work similar to that specified herein and who can demonstrate such successful experience through past project documentation and references.

1. Experience Period: Minimum five (5) years' experience.

2 Demonstration of Experience: **Ten (10) projects which have been completed within the past twenty-four (24) months utilizing similar products, scope, and complexity.**

3. Supervision: Placement and finishing of concrete work shall be performed under the supervision of a person having a minimum of five (5) years' experience in the placement and finishing of products specified herein.

4. **Previous projects shall be located in Los Angeles, Orange, Riverside, Ventura or San Bernardino Counties**. A listing of projects and addresses shall be provided with the bid and shall be reviewed and approved by the City prior to award of the bid. Installer qualifications shall be submitted to construction manager with copies to the Architect for information purposes. Three (3) copies of previous experience shall be provided.

5. **The above prequalifications refer to any and all site / exterior concrete work identified on plans.**

201-1.2 Materials

201-1.2.1 Portland Cement

1. Lime: ASTM C207, Type S, containing 85% by weight of calcium oxide.

2. Lime Putty: Make from hydrated lime conforming to ASTM C207, pulverized to such fineness that 100% will pass a 50 mesh sieve. Mix lime in water, run through screen into box and age 48 hours.

3. Cement shall be Type II/V Portland Cement.

201-1.4 Mixing

201-1.4.3 Transit Mixer

Mixes

a. Provide ASTM C94 ready-mixed concrete. Batch mixing at site not acceptable.

1. Strength**: 3,250 psi** minimum at 28 days for all concrete flatwork, curbs, seating, ramps, plaza area, etc.

2. Slump Range: 2" to 4" maximum

b. Coarse aggregate shall consist of 3/4" aggregate - 3/8" aggregate for pump mix.

c. Provide an approved water-reducing admixture in all concrete.

d. Provide an air-entraining admixture in all concrete. Air content 5% to 7%.

e. Indicate water added to mix at job site on each delivery ticket. Show quantity of water added. Site water tempered mixes exceeding specified slump range will be rejected as not complying with specifications requirements.

201-2 STEEL REINFORCEMENT FOR CONCRETE

201-2.2 Reinforcing Steel. [Add the following paragraph immediately after the first paragraph]:

Reinforcing steel shall be Grade 60 steel conforming to ASTM A 615 with 2-inch minimum cover unless shown otherwise on the plans.

Payment.

Payment for steel reinforcement shall be included in the lump sum contract price for all related items, i.e., concrete ramps, walks, walls, structures, footings.

201-3.1 Expansion Joint Filler and Joint Sealants

201-3.2 Premolded Joint Filler

Expansion joint material shall be **Deck-O-Foam by W.R. Meadows Corporation or approved equal – 1/4″ in dimension. Install per manufacturers specifications (909) 469-2606.**

201-4 CONCRETE CURING MATERIALS

Curing compound shall be ASTM 309 or better. Concrete cure and seal shall be “clear” by Davis Colors, or approved equal.

201-4.4 Concrete Sealer

Concrete sealer shall be **Siloxane WB Concentrate sealer or approved equal. Dilution to be 1:9 minimum to 1:7 maximum. Provided by Mike Davis of Innovative Concrete Products and Marketing, Inc. Phone: (949) 498-7077.** Concrete sealer to be applied to all sidewalks and the Monument Sign.

SECTION 202 - MASONRY MATERIALS

202-2.1 Materials: [Add the followings]:

1. Codes: Materials and work shall conform to the governing building code. In case of conflict between the codes, the more stringent shall govern.

2. Samples: Submit samples of all block to be used in the work.
3. Protection: Safeguard all materials against injury in transit, delivery, storage, sorting, installation, cleaning, and until final acceptance of the completed work. Store cement and lime in rainproof sheds with elevated floors. Store sand on tightly floored space, protected against mixing with ground or other materials.

4. Quality of construction is the responsibility of the Contractor.

202-2.1.1 Masonry Materials [Add the following]:

1. Concrete Block:

The concrete blocks shall conform to the requirements shown on the plans and shall be nominal size and of uniform color.

202.2.2 Mortar, Grout, and Water

1. Mortar [Add the following]:

Mortar. Mortar for laying masonry units shall consist, by volume, of 1 part Portland cement, ½ part lime putty, 3 parts sand, and shall conform to ASTM C270. If plastic type cement is used, the lime putty shall be omitted. Each batch of mortar shall be freshly prepared and uniformly mixed. Mortar for split face concrete block construction shall be integral color, color to be selected. Mortar for rock cobble construction shall be natural grey.

Mortar shall be colored to match integral color masonry block units. Coloring shall be chemically inert, fade resistant mineral oxide, or synthetic type.

2. Grout. [Replace with the following]:

   Grout for filling masonry units shall consist, by volume, of 1 part Portland cement and 3 parts sand. Sufficient water shall be added to create grout of fluid consistency. Grout shall be natural in color.

3. Pea Gravel. Clean, hard, containing not more than 5% by weight of flat, thin, elongated, friable, or laminated pieces; uniformly graded with not over 5% passing a no. 8 sieve to 100% passing a 3/8" sieve.

4. Lime. ASTM C207, Type S, containing 85% by weight of calcium oxide.

5. Lime Putty. Make from hydrated lime conforming to ASTM C207, pulverized to such fineness that 100% will pass a 50 mesh sieve. Mix lime in water, run through screen in to box, and age 48 hours.

Mortar and grout not used within 30 minutes after leaving mixer will not be permitted on the work. Retempering of mix will not be allowed.

202-2.2.2 Masonry, Sealants, and Waterproofing

1. Sealants [Add the following]:

   a. Masonry: "All guard" concrete masonry sealer as manufactured by Dow Corning, or approved equal.

2. Waterproofing [Add the following]:

   a. Waterproofing membrane (Miradri 860) and protective membrane (Miradri Protection Course 200V) as manufactured by Nicolon Mirafi, or approved equal. Contact James Heidt and Assoc. 818-248-9677. Apply per manufacturer's specifications.

   b. All drainage incorporated into waterproofing system, as indicated on drawings, shall be tied into storm drain lines indicated on civil engineer's drawings. Drainlines shall be Sch. 40 PVC and slope at 1% min.

   c. Contractor shall identify and provide for drainline and drainline rock alignment in field. Alignment shall consider and avoid conflict with all other site work. Drainline alignment shall be reviewed and approved by Quality Control Manager prior to installation and be indicated on as-builts as prepared by Contractor. Installation of drainline shall be included in cost of construction.

SECTION 203 - BITUMINOUS MATERIALS

203-5 SLURRY SEAL

203-5.1 General

Slurry seal shall be emulsion-aggregate slurry (EAS) conforming to 203-5.4.

203-5.2 Emulsion-Aggregate Slurry (EAS)

203-5.2.1 General

Emulsion-aggregate slurring (EAS) shall be Type I-CQS-1h conforming to 203-3

203-5.2 Materials

203-5.2.2 Emulsified Asphalt

Emulsified asphalt shall be of quick set type.

203-5.2.5 Latex

Latex shall be Ultrapave 65K produced by the Textile Rubber and Cement Company, Inc., or equal approved by the Engineer in advance of ordering the latex additive. It shall be added to the emulsified asphalt by the co-mill method at the emulsion plant at the rate of 2½ percent of weight of the emulsified asphalt. Latex-added emulsified asphalt shall be kept in a suspended state by an agitating mixer and mixed every three days.

(Use Section 203-6 for conventional AC.)

203-6 ASPHALT CONCRETE

203-6.1 General.

Asphalt concrete shall conform to the provisions of Subsection 400-1, “Rock Product,” and Subsection 400-4, "Asphalt Concrete".

The viscosity grade of paving asphalt shall be AR 4000. The mix designs and asphalt content shall be as follows:

3/4″ (III-B-3) Base Course	5.6%
1/2″ (III-C-3) Surface Course	5.8%
3/8″ (III-D) Leveling Course, Asphalt Concrete Dike, or Miscellaneous A.C. Placement (sidewalks and driveways)	6.8%

203-6.5 Type III Asphalt Concrete Mixtures

Asphalt concrete finish course and leveling course shall be Type III-C3-PG 64-10 (20% max RAP). Asphalt concrete base course shall be Type III-B2-PG 64-10 (20% max RAP).

(Use Section 203-11 for rubberized AC.)

203-11 ASPHALT RUBBER HOT MIX (ARHM)

203-11.3 Composition and Grading

Asphalt rubber hot mix finish course shall be ARHM-GG-C.

SECTION 207 – GRAVITY PIPE

207-17 PVC PLASTIC PIPE

207.17.1 General

A. PVC PLASTIC PIPE

1. PVC plastic pipe (SDR-35) shall conform to the requirements of Section 207-17 of the Standard Specifications. Pipe class to be referenced in table 207-17.1.

   PVC plastic pipe shall be constructed to the lines and grads shown on the plans for designated sizes and shall comply with the construction methods set forth in Section 306of the Standard Specifications.

2. PVC plastic pipe shall be measured and paid for at the contract unit bid price per linear foot for each designated size in accordance with Sections 306of the Standard Specifications and shall include full compensation for furnishing all labor, materials, tools, equipment, and incidentals, and for doing all the work involved in reinforced PVC plastic pipe, complete in place, as shown on the plans, and as specified in the Standard Specifications and these Special Provisions, and as directed by the Engineer.

B. SANITARY SEWER PIPELINE (4” AND 6” PVC)

1. Sanitary Sewer (4” And 6” PVC) “C” installation shall conform to the following standards and specifications.

   1. PVC Pipe ASTM D-2321

   Pipe bedding for PVC sewer pipe shall be ½-inch crushed rock per Section 200-1.2 of the SSPWC.

   The material used for construction of gravity sewer collection system shall be new and unused PVC pipe and shall conform to the specifications as set forth in SSPWC Subsection 207-17. All pipe shall conform to ASTM D-3034 and shall have a minimum SDR of 35.

   Testing shall conform to SSPWC Sections 306-7.8.2.2 (Water Exfiltration) and 306-7.8.2.4 (Air Pressure). Should any section of pipeline fail to pass these tests, the pipe shall be removed and repaired or replaced, and re-tested, until it satisfactorily passes the test.

2. Payment for Sanitary Sewer pipe will be in accordance with Subsection 306-15 of the SSPWC and additionally shall include fittings, permanent and temporary resurfacing and replacing striping in kind.

C. PRIVATE PVC WATERLINES (1/2" to 3")

1. Methods and Materials: Installation of PVC (C-900) waterline shall conform to SSPWC subsection 207-17.1 and 306. PVC pipe shall be constructed to the lines and grades shown on the plans for designated sizes.

2. Testing shall conform to SSPWC Sections 306-7.8.2.2 (Water Exfiltration) and 306-7.8.2.4 (Air Pressure). Should any section of pipeline fail to pass these tests, the pipe shall be removed and repaired or replaced, and re-tested, until it satisfactorily passes the test.

D. TRENCHES FOR PRIVATE WATER AND SEWER

1. This section covers trenching for water and sewer pipes and trenching for any other utility (i.e. drainage pipe) not covered by another Section of the specifications.

   Contractor shall locate all known utilities prior to trenching for new pipelines. The Contractor at the Contractor's expense shall repair any damage to existing or new electrical, telephone or communication, gas, sewer, water, and storm drain, and irrigation facilities.

2. Trench Safety: Before beginning excavation for a trench five feet or more in depth, the Contractor shall submit to and shall receive the acceptance (approval) of the Engineer of a detailed plan showing the design of shoring, bracing, sloping, or other provisions to be made for worker protection from the hazard of caving ground. Such plan shall be submitted at least five days before the Contractor intends to begin work on the trench. If such plan varies from the shoring system standards established by the Construction Safety Orders, the plan shall be prepared by a registered civil or structural engineer. Nothing herein shall be deemed to allow the use of shoring, sloping, or protective system less effective than that required by the Constriction Safety Orders of the Division of Industrial Safety. No excavation shall start until the Engineer has accepted the Contractor's shoring plans and Contractor has obtained a permit from State Division of Industrial Safety and given a copy of the permit to engineer.

   The Contractor shall provide and install adequate sheeting, shoring, and bracing, or equivalent method for the protection of life or limb, which shall conform to the applicable safety orders, when applicable. Nothing in these specifications shall be construed as imposing tort liability on the Owner or any of its employees.

E. TRENCH BACKFILL

1. Imported Trench Backfill

Imported trench backfill shall be required when native trench material has a moisture content greater than 4% above the optimum moisture content as measured in accordance with ASTM 1557, or does not meet the gradation requirements for imported trench backfill given below.

Imported trench backfill shall include material one foot above the pipe up to the existing pavement structural section.

All imported trench backfill material shall be a quarry waste or similar material with 100% passing a 3" screen, no more than 15% passing a #200 sieve and a sand equivalent of 20 minimum using California Test Method No. 217.

F. SANITARY SEPARATION

1. Sanitary separation shall be maintained as required in the Owner and/or State Standard details. The Engineer shall be notified immediately upon discovery of conflicting sewer laterals. A field determination will then be made by the Engineer as to which method of sanitary separation shall be used.

SECTION 209 – PRESSURE PIPE

209-1 IRON PIPE AND FITTINGS

209-1.1 Ductile Iron Pipe

209-1.1.2 Materials

All flanged pipe joints shall be joined utilizing Type 316 Stainless Steel nuts, washers and hex-head bolts. Gasket shall be full-faced, cloth reinforced Buna-N rubber.

Flex and transition couplings used to join pipes in water main construction shall have all threaded parts and joining hardware fabricated from Type 316 Stainless Steel.

Pipe harness assemblies, valve and fitting restraints and shackle-clamp assemblies shall be joined utilizing Type 316 Stainless Steel all-thread rod, nuts, bolts and washers. Clamps, shackles and other hardware may be carbon steel or ductile iron where appropriate, but must be coated liberally with corrosion protective mastic compound.

Bolted connectors fabricated from stainless steel shall have threaded parts coated liberally with an approved anti-seize compound.

All bolted and threaded fasteners shall be manufactured in the United States of America and shall conform to the minimum requirements for strength, material construction and dimension as established by the ASTM and the ANSI Specifications. All fasteners shall be accompanied by written certification from the manufacturer stating compliance with the appropriate specification.

All mechanical joints shall be restrained joints.

Water main fittings shall be manufactured in accord with AWWA C110 (ANSI A21-10) and shall be ductile iron. Cast Iron fittings shall not be accepted. Compact body fittings (AWWA C153) will not be permitted unless otherwise specified. Mechanical joint fittings shall be manufactured in accord with AWWA C110 and shall have retainer glands. All flanged pipe and fitting shall be shop fabricated, not field fabricated. Adapter flanges shall be ANSI B16.5 pattern, Class 150 flanges. Bolts and nuts for all installations shall be Type 316 Stainless Steel. Threads shall be coated with a liberal amount of anti-seize compound. Flange gaskets shall be full-faced Buna-N, nylon impregnated rubber.

Ductile iron pipe fittings and valves buried underground shall be protected with a polyethylene encasement (plastic film wrap) in accord with AWWA C105 (ANSI A 21.5). Wrap shall be loose 8-mil thick polyethylene.

SECTION 210 PAINT AND PROTECTIVE COATINGS

210-1 PAINT

210-1.4 Paint Materials.

Submittals:

1. Materials List:

    a. The Contractor shall furnish the articles, equipment, materials, or processes specified by name in the Contract Drawings and specifications. No substitutions will be allowed without prior written approval of the Owner.

    b. Complete material list shall be submitted prior to performing any work. Material list shall include the manufacturer, model number, and description of all materials and equipment to be used.

    c. Equipment or materials installed or furnished without prior approval of the Owner may be rejected and the Contractor required to remove such materials from the site at his own expense.

    d. Approval of any item, alternate, or substitute, indicates only that the products or products apparently meet the requirements of the Contract Drawings and specifications on the basis of the information or sample submitted.

        210-1.5.1 Metal fabrications: Priming and painting of all metal fabrications shall be as per Section 304-2.3.2.

210-1.6.1 General. [Replace the following]:

The paint for traffic striping and marking shall be as specified in Section 310.

The paint for concrete curbs shall be the following, or an approved equal:

A. J.E. Bauer Company #2133 A-9 Red.

B. J.E. Bauer Company #2134 A-9 Green.

C. J.E. Bauer Company #1864 A-9 Blue.

Thinner shall not be mixed with paint. Paint shall dry "tack-free" within thirty (30) minutes. Paint used for pavement legends and striping shall be a compound of paint and glass beads.

210-1.6.5 Reflective Material. Shall be as specified in Section 310.

210-3 General [Replace with the following]:

All metal fabrications shall be metalized per Section 304.

SECTION 211 – MATERIAL TESTS

211-2 COMPACTION TESTS

211-2.1 Laboratory Maximum Density [Replace with the following]:

Suitable excavated materials removed to accommodate new construction may be used as fill material subject to Soils Engineer's inspection and approval.

211-2.2 Field Density

Field density tests will be made by the Owner’s Geotechnical Engineer during the course of construction at the expense of the Owner. If field density tests indicate that any portion of the compacted subgrade has density lower than that specified, the Contractor shall rework that portion until the specified density is obtained.

Retest of areas which have failed compaction will be performed by the Owner’s Soils Engineer at the Contractor’s expense. All fill material and subgrade compaction shall be as noted in project soils report as prepared by **Southern California Geotechnical dated November 18, 2021**. **See Appendix A**.

SECTION 212 – WATER AND SEWER SYSTEM VALVES AND APPURTENANCES

212-5 VALVES

212-5.2 Butterfly Valves

212-5.2.1 General

All butterfly valves shall be of the tight-closing, rubber-seat type, conforming to the design standards of ANSI/AWWA C504 latest revision, except where noted herein. Valves shall be bubble-tight at the rated pressure in either direction and shall be

suitable for throttling service and/or operation after longs periods of inactivity. Manufacturer shall be ISO 9001 Certified or have similar certification up and above AWWA. All butterfly valves shall be from the same manufacturer. Valves shall be manufactured by the Henry Pratt Co. or approved equal.

All valve bodies shall be constructed of cast iron ASTM A126, Class B with ANSI B16.1 flange drilling. All valves shall have 316 stainless steel exterior body bolts. Discs shall be of the concentric design. Valve discs shall be constructed of ductile iron ASTM A536, Grade 65-45-12 with a 316 stainless steel edge. Valves shall have a one piece through shaft of 18-8 stainless steel, corresponding to the requirements of AWWA C504, latest revision. The shafts shall fasten to the disc by means of a threaded disc pin or through pin providing a positive leak proof connection of the shaft to the disc.

Seats shall be simultaneously bonded and vulcanized to the body of the valve. All interior surfaces in contact with water, excluding stainless steel and disc shall be rubber lined or epoxy coated. Valves with the rubber seat located on the valve disc will not be permitted. Seats shall be designed so that no adjustments or maintenance is required.

All shaft bearings shall be of the self-lubricating, corrosion-resistant, sleeve type. Bearings shall be designed for horizontal and/or vertical shaft loading. Shaft packing shall be self-adjusting and suitable for pressure or vacuum service. The flow path for valves shall be fully rubber lined. The valve disc shall be Fusion Bonded Epoxy Coated with an AWWA NSF-61 coating system or liquid epoxy on wetted interior surfaces 16 mils, holiday free. Exterior coating shall have 16 mils of liquid epoxy. All valves to be painted at the factory by the valve manufacture.

All valves shall be hydrostatic and leak tested in accordance with ANSI/AWWA C504, latest revision with the following modification: Valves shall be tested and rated at 200 PSI to facilitate field system hydro-test. All valves to be tested with the actuator installed as a complete unit by the valve manufacture. Provide certified test reports with all valve shipments. Manufacturer furnishing valves shall present proof of compliance with ANSI/AWWA C504, latest revision. The valve actuators are to be installed and tested at the factory by the valve manufacture. All actuators shall be provided with 316 stainless steel exterior body bolts.

SECTION 214 – TRAFFIC STRIPING, CURB AND PAVEMENT MARKINGS AND PAVEMENT MARKERS

214-4 PAINT FOR STRIPING AND MARKINGS

214-4.1 General

Temporary striping shall be Rapid Dry paint. Final striping shall be reflectorized thermoplastic.

For blue paint for ADA Parking Stalls, paint shall be Waterborne Traffic Line paint.

214-6 PAVEMENT MARKERS

All pavement markers shall comply with Section 85 of the State of California Standard Specifications.

214-6.3 Non-Reflective Pavement Markers

214-6.3.1 General

All new non-reflective pavement markers Types A and AY shall be ceramic.

214-6.4 Retroreflective Pavement Markers

214-6.4.1 General

All retroreflective pavement markers shall be 3M Series 290 with glass-covered faces, or approved equal.

PART 3 - CONSTRUCTION METHODS

SECTION 300- EARTHWORK

SECTION 300.1 CLEARING AND GRUBBING.

300-1.1 General:

1. All site grading, earthwork preparation, presaturation, compaction, etc. shall be as outlined in these specifications and the plan documents, and per project soils report prepared by **Southern California Geotechnical dated November 18, 2021. See Appendix A.**
2. All clearing and grubbing, grading and earthwork shall be performed per plans, technical specifications and in accordance with the Geotechnical Report.
3. Following Owner approval of Contractor, herbicide (Roundup or approved equal), and prior to the pulverization process (See Section 301) Contractor shall apply herbicide to all existing turf areas designated for removal within all proposed synthetic turf areas and not within 5' of the dripline of the adjacent existing trees. Any and all turf within 5' of existing trees shall be manually surface-scalped down to the beginning of the root zone and removed.

   Contractor shall have a Licensed Pest Control Advisor submit to the Owner a Pest Control Recommendation for the application of any pesticide/herbicide on Owner property. It must be applied by a Qualified Applicator. Both of these licensees are regulated by the California State Department of Pesticide Regulation. All chemicals shall be applied in accordance with registered label instruction and manufacturer's recommendations.

   The turf kill process shall last for a period of not less than 15 days to kill all living plant material (except existing trees). During the turf kill process, the area shall be allowed to dry out.

Following complete turf kill (to be approved by Engineer) scalp turf areas down to the beginning of root zone. Any and all turf within 5' of drip line of trees shall be manually scalped down to the beginning of the root zone. Remove all scalped turf from the project site per Section 300-1.3.

Following turf kill and removal, process exposed subgrade per Section 301.

4. Any and all earthwork/demolition within 5' of dripline of existing trees shall be conducted with the oversight/supervision of the City Arborist to verify no damage shall be imparted to existing trees.

5. Perform grading within contract limits, grading around trees, including adjacent transition areas to new elevations, levels, profiles, and contours indicated.

6. Any existing tree roots encountered which are 2" or greater in dimension shall be hand dug/excavated. Cutting of any roots 2" or larger in dimension will be performed under the supervision and approval of the City Arborist. No ripping of existing roots 2" or larger in dimension shall be permitted.

7. Removal of existing trees as noted on demolition plan shall include stump grinding of existing roots to a depth of 24". Contractor shall provide Owner approved backfill of stump ground holes. Resultant grade shall be compacted to 85% unless otherwise noted on plans or Geotech Report. Finish grade shall be smoothly feathered and transitioned to adjacent grade.

Site Grading

1. Perform grading within contract limits, including adjacent transition areas to new elevations, levels, profiles, and contours indicated. Check subgrade surfaces parallel to finished surface grades. Provide uniform levels and slopes between new elevations and existing grades.

2. Grade surfaces to assure areas drain away from structures and to prevent ponding and pockets of surface drainage. Check subgrade surfaces. Subgrade shall be free from irregular surface changes and as follows:

    a. The subgrade at any point shall not vary more than 0.10 foot above or below the grade established by the Improvement Plans if the structural section indicates placing surfacing on native material.

    b. The subgrade at any point shall not vary more than 0.10 feet above the grade established by the Improvement Plans if the structural section indicates placing an aggregate base or sub-base material on native materials.

    c. Precise Grading: Fine grades shall be set to the grades/elevations established by the improvement plans.

    d. Paved Areas: Shape surface of fine grade areas to line, grade, and cross-section indicated. Check compacted subgrade. Subgrade shall be suitable to

receive paving base materials, per Standard Specifications. Subgrade tolerance plus 0, minus 1/2".

e. Granular Base: Check subgrade surface. Subgrade surface shall be smooth and even, free of voids, to the required subgrade elevation. Compacted subgrade shall be suitable to receive granular base materials per Standard Specifications. Tolerance 1/2" in 10'.

3. Uniformly distribute and spread soil. Provide additional imported topsoil, if required, per **Southern California Geotechnical dated November 18, 2021** in the Appendix to complete the work. Use loose, dry weed-free topsoil. Do not use muddy topsoil. Place during dry weather.

4. Fine grade topsoil eliminating rough and low areas to ensure positive drainage. Maintain levels, profiles, and contours of fine grades.

5. Remove stones, roots, weeds, and debris while spreading topsoil materials. Rake surface clean of stones 1" or larger in any dimension and all debris. Provide surfaces suitable for soil preparation provided under lawn and planting work. Contractor shall be responsible for 'rock picking' and removal of all rocks, stones, and boulders one (1) inch in diameter and greater in all areas not requiring concrete paving. Removal of rocks from site shall be in compliance with state and local codes.

6. Perform grading within contract limits, including adjacent transition areas to new elevations, levels, profiles, and contours indicated. Grading and earthwork for the new construction shall include excavation of the existing grade as necessary to "key" in to existing grade the proposed surface. Spoils from such operations shall be relocated and stock piled by the contractor. Provide subgrade surfaces parallel to finished surface grades. Provide uniform levels and slopes between new elevations and existing grades.

300-1.2 Preservation of Property

Consult the records and Contract Drawings of adjacent work and of existing services and utilities which may affect site work operations.

300-1.3 Removal and Disposal of Materials

Removal and disposal of material shall be done by Owner approved licensed and Franchised Commercial Solid Waste Haulers. A current list of approved haulers can be found on the Owner's website at: http://newportbeachca.gov/index.aspx?page=157 and then selecting the link for Franchised Haulers List.

300-1.1 General

The work shall be done in accordance with Section 300-1.1 of the Standard Specifications for Public Works Construction except as modified and supplemented herein.

The Contractor shall dispose of all excess or waste material and shall include all fees for such disposal in the appropriate bid items.

The Contractor shall maintain the job site in a clean and safe condition. The Contractor shall remove any broken concrete, debris or other deleterious material from the job site at the end of each workday or as directed by the Engineer. All areas of roadway removal and replacement shall have a minimum trench width of 3-feet to facilitate maximum compaction. Contractor shall meet with the Engineer to mark out the areas of roadway removal and replacement.

Non reinforced concrete and asphalt wastes generated from the job site shall be disposed of at a facility that crushes such materials for reuse. Excess soil and other recyclable solid wastes shall not be disposed of at a sanitary landfill.

The Contractor shall maintain monthly tonnage records of total solid wastes generated and solid wastes disposed of at a sanitary landfill. The Contractor shall report said tonnage monthly to the Engineer and provide appropriate confirmation documentation from the recycling facility. All material disposal manifests shall be provided to the Engineer prior to release of final retention.

The Contractor shall dispose of all excess or waste material and shall include all fees for such disposal in the appropriate bid items

Concrete Curb, Walk, Gutters, Cross Gutters, Driveway, and Alley Intersections.

Concrete shall be removed to neatly sawed edges with saw cuts made to a minimum depth of two (2) inches. Joins to existing pavement lines shall be full depth sawcuts. Final removal between the sawcut lines may be accomplished by the use of jackhammers or sledgehammers. Pavement breakers or stompers will not be permitted on the job. The Engineer must approve final removal accomplished by other means.

Miscellaneous:

In addition to the work outlined in Subsection 300-1 of the Standard Specifications, the following items of work are included under Clearing and Grubbing unless otherwise covered by a specific bid item.

1. Maintain dust control at all times by watering; including developing water supply and furnishing and placing all water required for work done in the contract, including water used for extra work.

2. Provide for traffic control and all signs, barricades, striping and flashers necessary to maintain proper control, per approved Traffic Control Plans (as provided by contractor)

3. Protection and maintenance of utilities, trees. fences, walls, and other facilities within the construction zone, except those specifically directed by the Owner Representative to be removed or relocated.

4. Other items of work as directed in these Special Provisions.

5. Remove asphalt concrete paving and base material.

6. Remove PCC concrete.

300-1.5 Solid Waste Diversion

Non-reinforced clean concrete and asphalt wastes generated from the job site shall be disposed of at a facility that crushes such materials for reuse. Excess soil and other recyclable solid wastes shall not be disposed of at a sanitary landfill.

The Contractor shall maintain monthly tonnage records of total solid wastes generated and solid wastes disposed of at a sanitary landfill. The Contractor shall report said tonnage monthly to the Engineer and provide appropriate confirmation documentation from the recycling facility. All material disposal manifests shall be provided to the Engineer prior to release of final retention.

Miscellaneous:

In addition to the work outlined in Subsection 300-1 of the Standard Specifications, the following items of work are included under Clearing and Grubbing unless otherwise covered by a specific bid item.

1. Maintain dust control at all times by watering; including developing water supply and furnishing and placing all water required for work done in the contract, including water used for extra work.

2. Provide for traffic control and all signs, barricades, striping and flashers necessary to maintain proper control, per approved Traffic Control Plans (as provided by contractor)

3. Protection and maintenance of utilities, trees. fences, walls, and other facilities within the construction zone, except those specifically directed by the Owner Representative to be removed or relocated.

4. Other items of work as directed in these Special Provisions.

5. Remove asphalt concrete paving and base material.

6. Remove PCC concrete.

300-2 UNCLASSIFIED EXCAVATION

Trenching/grading Adjacent to Existing Trees.

“The Contractor is responsible for clearing and grubbing, pruning and selectively removing tree roots that interfere with the work. The Contractor shall submit recommendations by its sub-contracting arborist to the Owner for review for safely pruning and removing tree roots. No roots shall be pruned or removed unless this submittal is returned to the Contractor as satisfactory. Prior to the submittal, the Contractor shall arrange to meet with the Owner’s Arborist at the site to discuss Owner standards and requirements.

If required, the submittal shall adhere to the following guidelines.

1. Root Pruning

    a. Whenever possible, root pruning shall only be done on one side of the tree unless specifically authorized by the Owner's Arborist.

    b. Roots shall be cleanly severed using a root-pruning machine, axe or comparable tool.

2. Arbitrary Root Cut

    a. A straight cut with a root-cutting machine shall be made.

    b. The cut shall be a maximum 14" below grade for sidewalks and 26" for curbs, and shall be made as far away from the tree base as possible.

3. Selective Root Pruning

    a. This process involves selectively removing offending roots when a tree trunk or root flare is less than 3 (three) feet from the sidewalk and/or the size, species or condition of the tree warrants a root cut to be hazardous to the tree or when there is only one minor offending root to be removed and/or the damage is minimal (i.e., only one panel uplifted, etc.)

    b. Selective root pruning shall be performed with an ax or stump-grinding machine instead of a root-pruning machine.

    c. All tree roots that are within the sidewalk construction area shall be removed or shaved down.

    d. Roots greater than two inches in diameter that must be removed, must be pre-approved by the Owner's Arborist.

    e. Roots shall be selected for removal on the basis that will have the least impact on the health and stability for the tree.

Where it is necessary to excavate/grade adjacent to existing trees, the Contractor shall use all possible care to avoid injury to trees and tree roots. Excavation in areas where two (2) inch and larger roots occur shall be done by hand. All roots two (2) inches and larger in diameter, except directly in the path of pipe or conduit, shall be tunneled under and shall be heavily wrapped with burlap, to prevent scarring or excessive drying. Where a ditching machine is run close to trees having roots smaller than two (2) inches in diameter, the wall of the trench adjacent to the tree shall be hand trimmed, making clean cuts through. Trenches adjacent to trees should be closed within twenty-four (24) hours; and where this is not possible, the side of the trench adjacent to the tree shall be kept shaded with burlap or canvas.

Any and all grading within 5' of dripline of existing trees shall be performed under the supervision of the Owner.

300-2.6 Surplus Material

All surplus material including excavation, asphalt, concrete, etc. shall be disposed of in a legal manner, in compliance with the **City of Gardena Recycling Program** and at the expense of the Contractor.

300-3 STRUCTURE EXCAVATION AND BACKFILL

300-3.1 General

Footings shall bear on approved undisturbed bearing soil.

300-3.4 Inspection [Add the following after the first paragraph]:

1. Contractor shall provide adequate notice, cooperate with, provide access to their work, obtain samples, and assist testing agency and their representatives in execution of their function.

2. Fill Materials: Contractor shall provide testing of proposed import materials to verify suitability for use, gradation of material, moisture-density relation by ASTM D1557 and percent of organic materials.

3. When, during progress of work, field tests indicate that installed compacted materials do not meet specified requirements, provide additional compaction until specified density is achieved or remove and replace defective materials with new materials as directed by the Owner Representative. Cost of additional labor, materials, and testing to attain specified density shall be at Contractor's expense.

4. Do not cover or enclose work of this section before obtaining required inspections, tests, approvals, and location recording.

5. Submit reports for testing and inspection of the following, as directed by the Owner Representative.

    a. Subgrade surfaces
    b. Footing subgrade

300-3.5 Structure Backfill

1. All fill material is subject to testing and inspection.

2. Fill materials: shall be per project soils report as prepared by **Southern California Geotechnical dated November 18, 2021. See Appendix A.**

3. Granular base: per project soils report as prepared by **Southern California Geotechnical dated November 18, 2021. See Appendix A.**

4. Granular fill: per project soils report as prepared by **Southern California Geotechnical dated November 18, 2021. See Appendix A.**

5. Obtain inspection and approval of subgrade surfaces from the Project Geotechnical Engineer prior to filling operations. Scarify, dry, and compact soft and wet areas; remove and replace unsuitable subgrade materials with an approved compacted fill material. Take corrective measures before placing fill materials.

6. Soil stabilization: When exposed subgrade surfaces become spongy during construction operations and soil stabilization is required, stabilize subgrade materials, as directed by the Owner Representative.

7. Spread approved fill material per Section 800.

8. Compaction:

   a. Compact subgrade and fill material of all areas shall be as noted on project soils report as prepared by **Southern California Geotechnical dated November 18, 2021. See Appendix A.**

   b. Water settling, puddling, and jetting of fill and backfill materials as a compaction method are not acceptable.

   c. Maintain moisture content of materials, during compaction operations within required moisture range noted on project soils report as prepared by **Southern California Geotechnical dated November 18, 2021. See Appendix A** and to the satisfaction of the Project Geotechnical Engineer to obtain indicated compaction density.

   d. Provide adequate equipment to achieve consistent and uniform compaction of fill and backfill materials.

300-5.2 Imported Borrow

QUALITY ASSURANCE: The Soils Report shall control all aspects of this Work. If a discrepancy occurs between this specification and the Soils Report, the Soils Report shall take presidency.

A. Professional Observation: Perform Work of this Section under the inspection and approval of the Geotechnical Engineer. Give Geotechnical Engineer not less than 48 hours advance notice of readiness for inspection.

B. Source Quality Control: Obtain approval by Geotechnical Engineer of imported fill material before material is brought to site, and same approval of excavated material for use in fills or backfills prior to placing.

C. Requirements of Regulatory Agencies: Conform off-site excavation, backfill, and compaction to requirements of public authorities having jurisdiction. Obtain and pay for required permits and inspections.

SECTION 301- SUBGRADE PREPARATION, TREATED MATERIALS AND PLACEMENT OF BASE MATERIALS

301-1 SUBGRADE PREPARATION

301-1.2 PREPARATION OF SUBGRADE

A. Below any and all improvements with the exception of synthetic turf.

1. All subgrade preparation shall be performed in accordance with the Geotechnical Report, See Appendix A.

2. The upper 12 inches of the exposed subgrade should be pulverized, moisture conditioned, and recompacted to a minimum 90 percent relative compaction, in accordance with ASTM D 698.

3. Subgrade pulverization should be performed utilizing a pulverization machine (such as a Caterpillar RR-250 Road Reclaimer, or equivalent) that is capable of thoroughly pulverizing the subgrade to the satisfaction of the project geotechnical engineer.

4. Project Geotechnical Engineer shall review and approve pulverized soil to verify existing organics have been sufficiently pulverized prior to grading. Contractor shall be responsible for continued pulverization to the satisfaction of the project geotechnical engineer prior to commencing with grading operations.

B. Below any and all improvements with the exception of synthetic turf.

1. All subgrade preparation shall be performed in accordance with the Geotechnical Report, See Appendix A.

3011.6 SOIL STERILANT

301-1.6 General

All areas indicated on the plans to receive asphalt concrete pavement over native material shall be prepared in accordance with Section 300 of the Standard Specifications concerning subgrade preparation. In addition, after the compaction is completed, the Contractor shall apply a soil sterilant to the subgrade. Application shall be by spray equipment which provides good mechanical agitation and even coverage of the area to be treated. Spray equipment shall be calibrated before material is applied, and the Owner’s decision as to effectiveness of the spray equipment shall be final. Great care shall be taken to apply soil sterilant to the designated asphalt concrete areas only. Concrete or asphalt may be placed immediately after placement of soil sterilant. Soil Sterilant shall be Casaron 50W. or approved equal, as supplied by Target Specialty Products, Santa Fe Springs, CA., (800) 352-3870.

301-1.6.1 Operator's License

The Contractor's operator applying the soil sterilant shall be licensed by the State of California, Department of Food and Agriculture and registered with the Office of the Agricultural Commissioner of Los Angeles County as a pest control applicator.

301-1.6.2 Application

Any soil sterilant which is approved in writing by a licensed pest control advisor (for the purpose to which it will apply) may be used upon acceptance by the Owner Representative. The dye shall not stain concrete or masonry. Certification shall be furnished to the Owner Representative showing the purchase receipt and manufacturer's recommended rate of application of the material.

301-2 UNTREATED BASE

301-2.1 General - Crushed Aggregate Base (CAB)

A. Crushed Aggregate Base shall be placed to the lines and grades shown on the plans and in accordance with the methods of Section 301-2 of the Standard Specifications.

Crushed Aggregate Base shall be placed to the lines and grades shown on the plans and in accordance with the methods of Section 301-2 of the Standard Specifications.

Prior to placement of Crushed Aggregate Base, the subgrade soils shall be processed, moisture-conditioned, per Project Geotechnical Report prepared by **Southern California Geotechnical dated November 18, 2021. See Appendix A** and recompacted to a minimum depth of 90 percent relative compaction.

SECTION 302 - ROADWAY SURFACING

302-4 SLURRY SEAL SURFACING

302-4.8 Spreading and Application

Slurry seal shall be sufficiently cured for vehicle traffic without tracking or damage to the surface by 3:00 p.m. on the same day. In case of damage done by vehicles and/or pedestrians upon slurry that has not been sufficiently cured, the Contractor shall replace all of the damaged work at the Contractor's expense and no additional compensation shall be made by the Owner. Upon the completion of the day's slurry seal or seal coating, streets and parking lots shall be temporarily striped within 24 hours. Final striping shall be installed no more than ten (10) working days after placement of slurry seal.

Prior to applying slurry seal, the Contractor shall clean all work surfaces and remove all loose materials, vegetation, oil, and other foreign material. Additionally, all locations with weeds shall be treated by an approved weed-killer before any slurry seal is applied.

302-4.9 Field Sampling and Testing

Upon the Engineer's direction, the Contractor shall slurry seal test sections within the construction limits for each batch of slurry seal mix. The Contractor shall apply the slurry seal

test sections as directed by the Engineer. No slurry seal shall be applied until the test slurry seal sections have been approved the Engineer. The costs of these slurry seal tests shall be included in the contract price paid for slurry seal and no additional compensation shall be made by the Owner to the Contractor. Field samples that do not meet the requirements of Table 302-4.9.1 shall be re-tested. The Contractor shall be responsible for all cost associated with the re-testing.

302-5 ASPHALT CONCRETE PAVEMENT

302-5.1 General [Replace the last paragraph with the following]:

Asphalt Concrete shall conform to the requirements of Subsection 203-6.1 as modified by these Special Provisions.

All cracks ¼-inch or greater in width shall be cleaned, have weed kill applied and sealed with a hot-applied crack sealant approved by the Engineer. In residential areas, no highway rated equipment or trucks are to be used (eg. no super trucks). Use truck and trailers or transfers. Use of heavier rated trucks must be approved by Engineer. The top layer of asphalt concrete (finish course) shall be placed in a separate lift. Longitudinal joints between two passes of asphalt concrete shall be along a lane line. Holes, spalls, and cracks greater than 1/4-inch in width shall be filled and compacted to 95% minimum. The pavement shall then be cleaned with a power broom.

302-5.2 SEAL COAT

A. Prepare the surfaces, mix the sanded emulsified asphalt slurry seal coat material and apply 1 coat over all new paving and 2 coats over existing areas in accordance with the manufacturer's recommendations and referenced standards. Adjust type of slurry mixture used and application procedures based on actual project conditions and direction of placement so that a uniform distribution is obtained at all points.

1. SPECIFICATIONS FOR THE APPLICATION OF ASPHALT EMULSION SEALCOAT

a. The work covered by this specification includes the design, testing, and quality control required for the proper production of an Asphalt Sealcoat product and all materials, equipment and workmanship required for the application of an Asphalt Sealcoat to an existing asphalt concrete pavement where shown on the plans, as specified in these specifications and the special provisions, and as directed by the City.

b. Asphalt sealcoats under this specification shall be manufactured by uniformly blending asphalt cement, water, aggregates and various admixtures in a central plant capable of producing a minimum of 2,400 gallons per hour of finished product. Components shall be measured and recorded by weight controls that consistently incorporate all additives as required by these specifications. Blending the admixtures with the base asphalt emulsion shall be accomplished through the use of a high shear mechanical mixer to provide a uniform mixture.

c. Asphalt Sealcoat shall be stored in a tank equipped with power driven mixing or agitation equipment capable of keeping the Asphalt Sealcoat thoroughly and uniformly mixed. The stored material shall be protected from freezing in cold weather conditions.

2. MATERIALS

a. The materials for Asphalt Sealcoat immediately prior to mixing shall conform to the following requirements:

   i. The asphaltic cement shall have a penetration rating of 15 to 35 pen and an SHRP rating of PG-70-10. The asphaltic cement shall be modified to contain a minimum of 8% recycled crumb tire rubber incorporated into the asphalt cement by use of a high shear Siefer mill. The modified asphalt cement shall be combined with slate, clay, water, and admixtures to form a stable emulsion, with a pH not greater than 7.0 and solids content not less than 49%.

   ii. Water shall be potable and of such quality that the water will not separate from the emulsion before the sealcoat is applied.

   iii. Mineral Aggregate components shall be 100% passing the #50 mesh sieve. These components shall be natural or manufactured, consisting of clean, hard, durable, uncoated particles that are clean and free from decomposed materials, organic materials and other deleterious substances. The sieve analysis of the Mineral Aggregate components shall be determined in accordance with A.S.T.M. test method c136.

3. MIX CERTIFICATION

a. At least 7 days before asphalt sealcoat placement commences, the Contractor shall submit to the City for approval a laboratory report of tests and Manufacturer's certificate of compliance covering the specific materials to be used on the project.

b. The tests shall be performed by a laboratory capable of performing the applicable Asphalt Sealcoat Manufacturers Association (ASMA) recommended tests.

4. SURFACE PREPARATION

a. The surface to receive Asphalt Sealcoat must be free of all foreign material and dry immediately prior to sealcoat application. Cleaning may be by air blowing, vacuum, mechanical sweeper, washing, or other techniques as approved by the City. If washing the existing surface is used, the surface shall not have any standing water prior to application of the sealcoat. Salt, deicing agents, fertilizers, hard water deposits and other such chemicals will promote lack of bonding of the sealcoat to the existing surface and may require extraordinary cleaning measures.

b. Cracks in the asphalt surface shall be treated in accordance with City approved methods. Prior to application of sealcoat, deposits of grease or oil shall be cleaned by

scraping, burning and/or the use of approved detergents in order to promote adhesion of the sealcoat. After cleaning the areas described above, the areas shall be sealed with an oil seal. Oil seal shall be a quick drying latex emulsion with suitable admixtures manufactured specifically for the purpose of isolating the Asphalt Sealcoat from any residual oils, petroleum, grease or gas stained pavement.

c. The properties of the oil seal shall be such as to be compatible with the Asphalt Sealcoat.

d. In areas where the foreign oil or grease has penetrated the asphalt concrete such that cleaning as described above is not effective, the affected areas shall be removed to the depth necessary but not less than 3/4 inch. On excessively weathered surfaces, areas such that cleaning operations leave a film of dust, or on areas previously sealed with coal tar, a tack coat of SS1h (CSS1h) asphalt emulsion conforming to ASHTO T56, shall be applied. The tack coat shall consist of One (1) part SS1h (CSS1h) with Four (4) parts water applied at a rate of 0.05 to 0.10 gal/sq yd. The tack coat must be dry prior to application of the Asphalt Sealcoat.

e. Areas of structurally unsound asphalt concrete such as alligator cracking, low spots (bird baths) or rutting must be properly repaired as required by the City, prior to placement of the Asphalt Sealcoat.

f. Asphalt Sealcoat shall not be placed on new asphalt concrete until after a 30 day minimum cure period or as directed by the Project Manager.

5. APPLICATION

a. Application of the Asphalt Sealcoat shall be by mechanical means using rubber faced squeegees, brooms, distributor bar/wand or combinations of these or other techniques approved by the manufacturer and by the City.

b. The Asphalt Sealcoat being applied shall be uniform and free flowing, free of lumps and other inconsistencies. Potable water may be added for dilution as necessary as per manufacturer's recommendation for consistency and spread-ability but shall not exceed 20% by volume or as directed by City. If, after the addition of the maximum allowable water volume the seal coat is unsuitable, the materials shall be rejected and removed from the site.

c. The Asphalt Sealcoat shall consist of two application coats of material. Additional applications may be required as directed by the City. The sealcoat must be thoroughly dry prior to application of the second or subsequent coats.

d. Application of Asphalt Sealcoat in ambient temperatures in excess of 100 degrees F shall require pre-treatment of the asphalt concrete surface with a water mist. The water

must not be standing, but the surface should be damp prior to sealcoat application. This treatment is also recommended for application on porous surfaces where the water within the sealcoat may be absorbed too quickly by the existing pavement surface.

e. Care will be taken to ensure that the sealcoat material is kept off of all structures and appurtenances (concrete pads or curbs, light standards, wheel stops, buildings, etc.) on or surrounding the asphalt surface. Any material that is sprayed or splashed onto these structures shall be immediately removed by whatever means necessary, without damaging the structure, at the contractor's expense.

f. Asphalt Sealcoat shall be applied uniformly over the prescribed area in continuous parallel lines in a manner so that no ridges or uncoated areas shall exist, application rates will vary depending on the texture of the existing asphalt surfaces, with rough surfaces requiring more material than smooth surfaces.

g. The following application rates are guidelines only:

   i. Smooth, dense surfaces 20 gals/1,000 square feet (.18 gaUyd2)

   ii. Medium surfaces 30 gals/1,000 square feet (.27 gal/yd2)

   iii. Rough surfaces 40 gals/1,000 square feet (:36 gal/yd2)

h. When the Asphalt Seal coat is to be placed on a severely weathered pavement surface with a very rough texture, the inclusion of ground copper slag additive is recommended for the first coat. The ground copper slag additive shall be 100% passing the #50 mesh sieve. The addition of the ground copper slag additive shall not exceed 4 pounds per gallon without approval of the City. The inclusion of the ground copper slag additive may require the addition of 1-3% Liquid Latex binder (Micro-lock) per gallon of undiluted Asphalt Sealcoat or as directed by City.

i. The properties of the ground copper slag additive shall be determined in accordance with Cal Test 202 testing methods.

j. The properties of the Liquid Latex shall be such as to be compatible with sealcoat product, and approved by the manufacturer

6. WEATHER

a. Asphalt Sealcoat shall only be applied when the ambient temperature is at least 50 degrees F and rising. Sealcoat shall not be applied when there is an imminent threat of rain, freezing temperatures, during rain, or when the surface contains standing water.

7. MISCELLANEOUS

a. All patching will be with a 3" asphalt lift

b. Contractor is responsible to field measure for their final bid price.

c. Traffic shall not be allowed on the Asphalt Sealcoat until the sealcoat is thoroughly cured, which in warm weather conditions, is approximately 24 hours. Minor scuffing or power steering marks may occur on a newly applied surface in warm weather.

d. Notifications placed throughout the park shall state the time and date that the surfacing will take place. Suitable tow-away signs may be posted prior to the surfacing. Should work not occur on the specified day, a new notification shall be distributed.

e. Irrigation watering shall be kept off for at least 24 hours prior to and 48 hours after the application of Asphalt Sealcoat.

f. Upon request, the contractor shall supply the City with scale tags for the project containing the following information: product name, project name or location, gallons/tons supplied for the project. Striping for parking and traffic flow should be done only after the sealcoat has thoroughly dried.

g. Finished dry and thoroughly set surface seal is to be smooth, tough, resilient, uniform color and free from coarse textured areas, lap marks, ridges and other surface irregularity.

h. Seal coat shall be allowed to cure before allowing traffic on the pavement. Light dusting of the area with fine sand may be used to remedy excess seal coat application.

302-5.4 Tack Coat

Tack coat material shall be Grade SS-1h emulsified asphalt

302-5.5 Distribution and Spreading. [Delete the sixth paragraph and add the following]:

The depositing, distributing, and spreading of the asphalt concrete shall be accomplished in a single, continuous operation by means of a self-propelled mechanical spreading and finishing strike-off assembly capable of being accurately regulated and adjusted to distribute a layer of the material to a definite predetermined thickness. The machine shall be equipped with automatic screed controls. The automatic screed controls require a reference system for the automatic system to follow. This reference can be the base on which asphalt concrete is being placed, the lane next to the material being placed, or a string line. The automatic screed control can also follow a traveling reference system. A traveling reference system may be a ski attached to a control arm, which notes changes in base contours and adjust the screed automatically to compensate. A string line or traveling reference system shall be used to allow the automatic control to adjust screed height as necessary to maintain proper longitudinal (length-wise) grade of the pavement. To maintain proper transverse (width-wise) grade, the automatic screed control shall use a pendulum system attached to a beam running between the two screed pull arms.

When paving is of a size of in a location that use of a self-propelled machine is impractical, the Owner Representative may waive the self-propelled requirement.

At those location where new asphalt concrete pavement overlay joins existing asphalt pavement, the Contractor shall rake out all aggregate 3/8 inch or larger and feather the new paving to form a smooth transition to join the existing pavement.

302-5.8 Manholes (and Other Structures)

All manholes, water valve boxes, and utility boxes shall be temporarily lowered prior to pavement cold milling. Upon completion of asphalt concrete finish course, the top of manholes, water valve boxes, and utility boxes shall be adjusted to grade to meet the smoothness requirement as specified in 302-5.6.2.

302-6 PORTLAND CEMENT CONCRETE PAVEMENT

302-6.4 Concrete Finishes

1. General. Unless otherwise specified in this Subsection, retardant finish, broom, and steel trowel finish concrete used in the hardscape areas shall be constructed of concrete prepared as prescribed in Subsection 201-1. Portland Cement Concrete Pavement shall be constructed in accordance with Section 302-6 “Portland Cement Concrete Pavement’” except as modified herein.

2. **Job Sample. Contractor shall pour and finish a 6' X 6' square sample of each concrete finish and color using the specified materials and construction techniques.** Each sample shall include final finish color as specified, sawcut joints with crack chaser, expansion joints, and shall meet with the Owner's approval prior to placing any production concrete. Production pours are not acceptable as field samples. Sample 6’ X 6’ concrete panels shall be prepared by Contractor for Owner’s review three weeks prior to scheduled production pours. Samples not meeting with Owner’s satisfaction shall be repoured and finished at no cost to Owner. Preparation of ‘Top Cast’ no. 5 finish samples (see Section 201-1.2.4) shall be prepared per supplier’s specifications. After approval of Job Sample

3. Subgrade Preparation: All soil material used as compacted fill or material processed in place or used to backfill trenches should be moistened, dried, or blended as necessary to achieve the optimum moisture content for compaction, and densified with relative compaction as determined by ASTM Test Method D 1557 per project Geotechnical Report, by **Southern California Geotechnical dated November 18, 2021. See Appendix A.**

   The subgrade under any sidewalks and flatwork shall be scarified to a depth of at least eight (8) inches or as recommended by the Project Soils Report (See Appendix A), and moisture shall be applied to maintain free water on the surface for at least 24 hours prior to placing concrete and the subgrade shall then be prepared without compactive effort.

Preparation. Subgrade shall be compacted and prepared in accordance with project soils report as prepared by by **Southern California Geotechnical dated November 18, 2021. See Appendix A.**

302-6.7 Traffic and Use Provisions

The Contractor shall not allow vehicular traffic on new concrete until the concrete has attained a minimum compressive strength of 3000 psi. High early strength concrete may be attained to meet the time constraints by the use of additional portland cement or chemical admixtures in accordance with Section 201-1 and with prior approval of the Engineer. The cost of high early strength concrete shall be included in the unit prices for all concrete bid items.

SECTION 303 - CONCRETE AND MASONRY CONSTRUCTION

303-1 CONCRETE STRUCTURES

303-1.1 General

Concrete structures shall conform to the provisions of the Standard Specifications and herein.

Reinforcing steel shall be Grade 60 billet steel conforming to ASTM A615.

The surfaces of all concrete structures shall receive a smooth trowel finish, unless otherwise specified on plans.

The Contractor shall furnish all labor, tools and materials to construct reinforced Portland Cement Concrete structures and appurtenant work to grades and dimensions shown on the Plans or staked in the field. The Contractor shall submit method and sequencing for placement of P.C.C. for the Owner's Representative approval at least ten (10) working days prior to commencement of work.

Unless otherwise specified, transverse construction joints shall be placed in all reinforced sections at intervals of not less than ten (10) feet or more than fifty (50) feet. The joints shall be in the same plane for the entire structure and, for concrete thickness greater than 6-inches, shall be keyed as directed by the Owner’s Representative.

303-1.3 Forms

Forms shall be braced to withstand the pressures developed and shall be tight to prevent the loss of mortar. Formed wall surface shall be free of any unevenness greater than 1/4-inch when checked with a 10-foot straight edge.

Concrete in walls with side slopes flatter than 3/4:1 shall be placed on suitable material which has been overfilled, compacted, and trimmed to true grade. Backforms shall be used where the side slope is 3/4:1 or steeper.

A clear non-staining form release agent which will not discolor nor affect the surface texture of the concrete and does not react with any ingredients of the concrete shall be used. The cost of

Furnishing and Placing Form Release agent shall be included in the cost of Portland Cement Concrete.

All form work for concrete construction (mow curbs, paving, concrete curbs, gutters, walls, etc) shall be reviewed and approved by Owner prior to pouring of concrete.

303-1.7 Placing Reinforcement.

303-1.7.1 General

Aluminum and plastic supports for reinforcement shall not be used.

Bars shall be accurately spaced as shown on the Plans and spacing of first bar immediately adjacent to transverse construction joint shall be one-half the required spacing shown on the Plans. In no case shall the clear distance between parallel bars be less than 2-1/2 diameters of the bar, or a minimum of 2-inches. Unless otherwise shown on Plans, embedment of reinforcing steel (other than stirrups and spacers) shall be 1-1/2 inches clear depth for #8 bars or smaller, and shall be 2-inches clear for #9 bars and larger. Where placement of reinforcing steel requires alternate bars of different size embedment, requirements shall be governed by the larger bar. Stirrups and spacers shall be embedded not less than 1-inch clear depth.

Measurement of embedment shall be from the outside of the bar to the nearest concrete face. Tack welding or butt welding of reinforcing bars will not be permitted.

303-1.7.2 Splicing

Reinforcing bars may be continuous at locations where splices are shown on the plans, at the option of the Contractor. The location of splices, except where shown on the Plans, shall be determined by the Contractor, based upon using available commercial lengths where applicable.

Splices shall consist of placing the reinforcing bars in contact and wiring them together in such a manner as to maintain the alignment of the bars and to provide minimum clearances.

No lapped splices will be permitted at locations where the concrete section is not sufficient to provide a minimum clear distance of 2-inches between the splice and the nearest adjacent bar. The clearances to the surface of the concrete shall not be reduced. Length of lapped splices shall be as noted on Contract Drawings.

Splices of tensile reinforcement at points of maximum stress shall be avoided; however, any deviation from splices shown on the Plans shall be approved by the Owner’s Representative.

303-1.8 Placing Concrete

303-1.8.1 General

The Contractor shall exercise caution in placement of concrete in walls and congested areas to ensure proper consolidation and that there are no voids, and protection of waterstops in position. Adequate provisions shall be made for visual inspection of concrete placement, consolidation and waterstop protection. Pouring of walls in lifts, use of smaller maximum

aggregate sizes, or other methods as necessary may be proposed by the Contractor and will be permitted only after evaluation by the Owner Representative.

303-1.9.2 Ordinary Surface Finish

Ordinary Surface Finish shall not apply to rock pockets which, in the opinion of the Owner Representative, are of such extent or character as to affect the strength of the structure materially or to endanger the life of the steel reinforcement. In such cases, the Owner Representative may declare the concrete defective and require the removal and replacement of the structure affected.

303-1.10 Curing. [Amend first paragraph with the following]:

Exposed concrete surfaces shall be sprayed with Type 2 curing compound at a uniform rate of one gallon per 150 square feet.

Surface retardant: Surface retarder shall be “Top Cast” No. 5 surface retarder or approved equal, provided by Dayton Superior. “Top Cast” retardant to be applied at specific paving conditions noted on plans and shall utilize Top Cast release agent, as noted on plans. Contractor shall contact Chuck Poole of Dayton Superior Corporation (714) 287-6342 to meet on site to discuss application procedures prior to preparation of concrete samples.

Concrete sealer shall be Siloxane WB Concentrate sealer. Dilution to be 1:9 minimum to 1:7 maximum. Provided by Mike Davis of Innovative Concrete Products and Marketing, Inc. Phone: (949) 498-7077. See manufacturer recommendations.

303-1.11 Payment [Replace paragraph one with the following]:

Portland Cement Concrete structures shall be included in the contract price and shall include full compensation for furnishing all labor, materials, tools and equipment and doing all work required to construct the structure in conformity with the plans and specifications.

Should the Contractor request and obtain permission to use admixtures for his own benefit, he shall furnish such admixtures and incorporate them in the concrete mixture at his expense, and no additional compensation will be allowed therefore.

Should the Owner Representative direct the Contractor to incorporate any admixtures in the concrete when their use is not required by these specifications, furnishing the admixtures and adding them to the concrete will be paid for as Extra Work a provided in Subsection 3-3, as amended by these Special Provisions.

303-4.1.1 General

Graffiti Coating

1. Graffiti Coating

All exposed concrete block at shall receive GSS-10 Graffiti Coating System (GSS-100 and GSS-200 Finish Coat), or Owner approved equal. Application shall be per

manufacturer specifications. Provide 4′ x 4′ sample mock-up of sealed material for review and approval prior to production applications.

303-5 CONCRETE CURBS, CONCRETE PAVING, CONCRETE SEATING, WALKS, GUTTERS, ACCESS RAMPS, AND DRIVEWAYS.

303-5.1 Requirements

303-5.1.1 General

1. Concrete curbs, ramps, and walks shall conform to the Standard Specifications and supplied herein in conjunction with Construction Document Plans and Details.

2. Sidewalks and curb access ramps shall be opened to pedestrian access on the day following concrete placement. In addition, all forms shall be removed, irrigation systems shall be repaired, and backfill or asphalt concrete patchback shall be placed within 72 hours following concrete placement.

303-5.2 Forms

303-5.2.1 Standard Form

1. Use flexible metal, 1" lumber or plywood forms to form radius bends.

2. Install, align and level forms, stake, and brace forms in place. Maintain following grade and alignment tolerances except where accessibility concerns would bring non-compliance if tolerances were allowed.

   a. Top of Form: Maximum 1/8” in 10’0”.

   b. Vertical Face: Maximum 1/8” in 10’0”.

3. The Contractor shall include all fine grading and compaction with regard to setting forms during concrete placement.

4. The Contractor shall notify Owner a minimum of 36 hours in advance of scheduled form board review. All form work for hardscape construction (mow curbs, concrete paving, curbs, gutters, walls, etc.) shall be reviewed and approved by Owner prior to pouring of concrete. All formwork shall be constructed utilized the projects digital base plan. Modifications in formwork necessary for alignments to be straight, true to line with well transitioned radial, curved sections shall be provided by the contractor at no additional cost to the contractor.

303-5.4 Joints

303-5.4.1 General

1. Provide expansion joints using pre-molded joint filler at concrete work abutting curbs, walks, and other fixed objects.

   a. Locate joints as indicated. When not indicated, provide joints at maximum 24'-0" on center for curbs and walks. Align joints in abutting curbs and walks. Contractor shall provide a joint layout play for review and approval by the Owner prior to construction of joints.

   b. Install expansion joint fillers full-width and depth of joint. Recess top edge below finish to receive sealants as indicated on the details.

   c. Provide joint fillers in single lengths for the full slab width, whenever possible. Fasten joint filler sections together when multiple lengths are required.

   d. Where intersecting joints occur join top edge and continue any spliced joints without deviation of form line or direction.

   e. Protect the top edge of the joint filler during concrete placement.

   f. Control joints shall be provided to a depth equal to 1/3 the thickness of the concrete pour.

303-5.5 Finishing

303-5.5.2 Curb

The Contractor shall install or replace curb markings that indicate sewer laterals on the face of the curb. The Contractor shall mark the curb with a chiseled "S" for sewer. A two (2) day notice to the Engineer is required for requests to the Owner to determine the location of sewer laterals.

303-5.5.4 Gutter

The Contractor shall hold the flow line tolerances to within 0.01 feet of those elevations shown on the plan.

SECTION 304 - METAL FABRICATION AND CONSTRUCTION FOR ALL METAL FENCING, MISCELLANEOUS METAL ITEMS, ETC.

304-2.3 Ornamental Metal

304-2.3.1 General. The materials for ornamental metal items. 63510

304-2.3.2

1. Fabrication: Miscellaneous metal work which will be exposed to view shall only be fabricated with materials that are smooth and free of surface blemishes, including, but not limited to, pitting, seam marks, trade names, and roughness. Remove such blemishes by grinding or by welding and grinding prior to cleaning, treating or applying surface finishes.

2. Shop Assembly: Work shall be fitted, shop assembled, and ready for erection when identified on construction schedule.

3. Workmanship: Form metals to shape and size with sharp lines and angles, and with smooth surfaces and faces free from distortion. Mill fastening to a close fit. Do all fitting true to line. Bend or form all tubing, pipe, and other members to continuous and true curves with all joints flush and neatly fastened together. All fabrications shall be square, plumb, straight, and true.

4. Jointing and Connections: Jointing and intersections shall be accurately made in true planes and tightly fitted to hairline joints. Connections shall be welded. Do not use screws unless specifically shown or required - if used, screws shall be countersunk with a metal compatible with the members being joined.

5. Welding: Welding shall conform to the requirements of the "Structural Welding Code" ASW D1.l. Where welds are exposed to views, bevel members prior to welding and weld full. Grind welds flush, smooth, level with the adjacent surfaces. Grind welds at intersecting members to sharp lines.

6. Holes: Accurately space to centers such that boles are not poorly or carelessly seamed.

7. Anchorage: Fabricate and space anchoring devices to provide adequate support for intended use.

8. Insulation of metals from contact with masonry and different metals from contact with each other shall be provided where necessary to prevent corrosion.

9. Debur and grind smooth all welds and rough spots.

10. All ornamental metal fabrications shall receive a sandblast finish to remove all oil, grease, lint, and rust.

11. All ornamental metal fabrications shall receive 2 mil. zinc thermal sprayed metalized finish per ANSI/AWS C218.93, ASTM C633, ASTM B833-93, and SSPC-CS Guide 23.00, June 1, 1991. Contact: Zinc Nation, Inc. Contact: Whitney Blakeslee. Phone: 949-837-1839. Contractor shall submit sample of metalizing for review and approval prior to metalizing ornamental metal items. Contractor shall submit receipt of all metalized items and proof that all metal items were metalized per these specifications prior to painting.

12. Coating System Type

a. System Type: Epoxy/urethane, as provided by Tnemec Company Incorporated, or approved equal, 417 East Weber Street, Compton, CA 90222. Phone 310-637-2363. Fax 310-637-4161. Web Site www.tnemec.com.

Equivalent materials of other manufacturers may be substituted only by approval of the architect. Requests for substitution shall include manufacturer's literature for each product giving the name, generic type, descriptive information solids by volume, recommended film thicknesses and a list of five projects where each product has been used and rendered satisfactory service. No request for substitution shall be considered that would decrease the film thickness of offer a change in the generic type of coating.

b. Surface Preparation: Zinc thermal sprayed metalized finish.

c. Prime Coat: One coat Tnemec Intermediate, 115, 3 to 5 mils. DFT.[4]

d. Finish coat: One coat Tnemec Urethane, 1028 or 1029, 2 to 3 mils.

e. Color: 'Dove Gray' (38GR), to be approved by City.

f. Contractor shall submit proof that Tnemec paint was the material used on all metal items.

13. Provide a minimum of 2 gallons of field touch up paint to City for their on-going use.

304-2.3.3

1. Installation: Ornamental metal items and fencing shall be erected in accordance with the plans. All work shall be erected square, plumb, straight, and true. Perform all required cutting, drilling, and filling. Accurately set and properly secure. Attach work in true planes, in alignment, properly reinforced and stiffened.

2. Embedded Items: Provide miscellaneous metal items to be embedded or installed in concrete.

3. Coordination with Related Work: Provide all anchors, sleeves, bolts, and connecting members necessary for securing metal work to other adjacent or adjoining work. Provide and install angles and other reinforcement. Do all cutting, puncturing, drilling, tapping, or modifying of adjacent or adjoining work where necessary for proper installation. Furnish all sockets, bolts, anchors, and other portions of this work to the various trades where needed that are to be built into the structure and be responsible for their accurate spacing and setting.

4. Expansion and Contraction: Assemble and install work with adequate provisions to prevent objectionable distortion and overstressing from expansion and contraction. Construct to be weather-tight where exposed to the weather.

5. Touch-up Painting: Immediately after erection of miscellaneous metal items, all rusted areas, abraded areas, bolts and nuts, and all welds shall be thoroughly cleaned and spot primed with same material used for shop painting.

6. Miscellaneous Steel Items: Provide all necessary steel items required which are not specified elsewhere. All necessary supports, guides, brackets, etc., shown or required shall be provided.

304-2.3.4 Measurement and Payment. Payment for ornamental metal items and their painting shall be made as part of the lump sum contract price and no additional compensation will be allowed.

SECTION 306 – OPEN TRENCH CONDUIT CONSTRUCTION

306-1 OPEN TRENCH OPERATIONS

306-1. General [Delete the first paragraph and substitute the following]:

For the purpose of shoring or bracing, a trench is defined as an excavation in which the depth is greater than five feet.

[Add the following subsections:]

Removal of ground water shall be performed to a level sufficiently below the structure subgrade to ensure a firm and stable subgrade for the construction of structures. All costs for such dewatering shall be included in the prices bid for the various items of work except as may be otherwise specified in the General Specifications.

306-1.1.6 Bracing Excavations

Trench safety and shoring of excavations shall comply with the requirements of the General Specifications. The Contractor shall be required to supply a copy of any permit required by the Division of Industrial Safety at the time of the pre-construction meeting.

The cost of furnishing and installing bracing or other provisions required for worker protection shall be borne by the Contractor. All material used for protection shall be removed from the project unless it has been approved to remain in place by the Owner Representative.

306-1.1.7 Dewatering

The Contractor shall provide and maintain at all times during construction, ample means and devices to promptly remove and properly dispose of all water entering the excavations or other parts of the work. No concrete footing or floor shall be laid in water, nor shall water be allowed

to rise over them until the concrete or mortar has set at least eight (8) hours. Water shall not be allowed to rise unequally against a wall for a period of twenty-eight (28) days.

Dewatering for the structures and pipelines shall commence when ground water is first encountered and shall be continuous until such time as water can be allowed to rise in accordance with the above paragraph. Dewatering shall be accomplished by well points or some other method which will ensure a dry hold and preservation of final lines and grade of the bottoms of excavation, all subject to the approval of the Owner Representative.

Disposal of water from dewatering operations shall be the sole responsibility of the Contractor.

Payment for removal of water shall be included in the items of work which require the dewatering, and no additional compensation will be allowed therefore.

306-1.3.4 Compaction Requirements. [Replace with the following]:

All trench backfill shall be densified to 90% minimum relative compaction. Jetting will not be permitted unless specifically approved in advance by the Owner Representative.

306-1.5.2 Permanent Resurfacing

All testing of underground installation at any given point shall be completed before the surface course is placed at that point.

306-2 DELIVERY, STORAGE, HANDLING, AND PROTECTION OF PIPELINE MATERIALS, FITTINGS, VALVES, AND APPURTENANCES

306-2.7 Shutdowns of Existing Pipelines

306-2.7.3 Temporary Bypasses

The Contractor will be responsible for the installation of a temporary by-pass system as described in these special provisions and the plans.

The Contractor can commence installation of new mains once the temporary by-pass system is in place and has passed a disinfection test. The Contractor shall have the by-pass line inspected by Owner personnel prior to commencing the project.

If at any time, the temporary by-pass water system is damaged, it will be the Contractor’s responsibility to repair and replace any damaged or destroyed section to the satisfaction of the Owner.

The Contractor shall adhere to the following special provisions when installing temporary by-pass systems:

1. Water service shall be maintained to all customers at all times except as necessary to install the temporary by-pass system. The Contractor’s method of providing such continuous service shall be approved by the Owner prior to construction.

2. It is recommended that 2-inch steel by-pass lines shall be installed. All temporary piping crossing streets shall be buried and paved flush with the existing surface.

3. The Contractor shall make arrangements with the Owner's Utilities Division for disinfection, bacteriological testing and certification of the by-pass systems. The Contractor shall be responsible for disinfection and flushing the by-pass systems as well as pulling the bacteriological samples and running the incubations tests for coliform bacteria.

4. The Contractor will then remove meters and connect services to temporary by-pass systems. Upon acceptance by the Owner of new water mains, after the water services have been reinstalled by the Contractor, the Contractor will disconnect the temporary by-pass system at each service connection and reinstall meters.

The temporary water main by-pass system installed at any given time shall not exceed the water services between any single alley section (from local street intersection to local street intersection) unless approved in writing by the Owner in advance of the work, including specific limits of the proposed by-pass.

306-8 PREFABRICATED PRESSURE PIPE

306-8.9 Pipeline Pressure Testing, Disinfection, and Commissioning

The Contractor will be responsible for pressure testing, disinfection and flushing of the new water mains. The Contractor shall adhere to the following special provisions for pressure testing, disinfection and flushing of new water mains and services.

1. Water service shall be maintained to all customers at all times except as necessary to transfer service from the old main to the new main. The Contractor's method of providing such continuous service shall be approved by the Owner prior to construction.

2. Contractor shall pressure test new main lines including any services prior to disinfection.

3. The Contractor shall make arrangements with the Owner's Utilities Division for disinfection, bacteriological testing and certification of the new main and services. The Contractor shall be responsible for disinfection and flushing the main and services as well as pulling the bacteriological samples and running the incubation tests for coliform bacteria.

4. Upon successful completion of the pressure testing and disinfection, the Contractor shall thoroughly flush all mains and services prior to connection to customers. Flushing of services shall be done at the new angle stop and fittings shall be utilized such that the meter box is not flooded by the flushing operation

SECTION 310 - PAINTING

310-5 PAINTING VARIOUS SURFACES

310-5.4 Painting Metal Guard Rails

a. All exposed metal railings shall receive a protective coating as manufactured by International Protective Coatings, available from Dunn Edwards Paints, or approved equal. Apply per manufacturer's specifications. Submit colors to Owner for review.

b. First coat Interseal 670 HS primer (color to match top coat).

b. Second coat Interthane 990 HS top coat (color per plan).

310-5.6 Painting Traffic [and Parking Lot] Striping, Pavement Markings, and Curb Markings.

310-5.6.1 General. The third paragraph shall be deleted and replaced with the following paragraphs:

Unless otherwise shown on the plans, transitional traffic lane striping for detours shall conform to Owner Standard Plans. No lane shall encroach within five feet of an open excavation or within two feet of a longitudinal curb.

310-5.6.4 Geometry, Stripes and Traffic Lanes; and 310-5.6.5 Traffic Stripes and Markings.

The following paragraph shall preface these Subsections:

TRAFFIC SIGNING, STRIPING, MARKINGS, AND MARKERS

Description - This work consists of placing traffic signs, raised pavement markers, traffic striping, pavement legends, and markings as shown on the plans in conjunction with traffic signal work.

All work shall conform to these specifications, Owner Standard Plans and Specifications, and to any supplementary standards or specifications which may be referred to herein.

Materials - Traffic paint shall be fast dry solvent borne conforming to Section 84-3, Painted Traffic Stripes and Pavement Markings, of the Caltrans Standard Specifications. All paint shall be reflective and shall conform to requirements of the South Coast Air Quality Management District.

Reflective raise pavement markers shall conform to Section 85, Pavement Markers, of the Caltrans specifications and to the applicable provisions of the Caltrans Standard Plans.

Sign face reflective sheeting shall be high intensity grade with protective overlay.

Construction - Application of traffic striping shall conform to applicable provisions of Section 310-5.6 of the "Standard Specifications" and Caltrans Standard Specifications. All traffic striping shall consist of two coats of paint. A minimum of seven days shall be provided between coats and/or as directed by the Engineer.

Installation of traffic signs shall conform to applicable provisions of Section 56-2, Roadside Signs, of Caltrans specifications.

Installation of reflective pavement markers shall conform to Section 85, Pavement Markers, of the Caltrans Standard Specifications and to the applicable provisions of the Caltrans Standard Plans. Old raised pavement markers shall be removed as directed by the Engineer.

Stencils shall conform to the Caltrans Standard Plans.

No striping work will start until the Engineer has approved the spotted or “cat-tracked” markings. No section of any street shall be left without the proper striping for more than 24 hours, or over weekends or holidays.

Traffic striping and markings shall conform to Owner Standard Plans, the Caltrans Traffic Manual, the Caltrans Maintenance Manual, American Disabilities Act and Title 24 unless otherwise shown on the plans.

310.5.6.7 Layout, Alignment, and Spotting.
The first sentence of the first paragraph shall be deleted and replaced with the following:

The Contractor shall perform all layout, alignment and spotting. The Contractor shall furnish the necessary control points for all striping and markings and shall be responsible for the completeness and accuracy thereof to the satisfaction of the Owner Representative. Traffic striping shall not vary more than H-inch in 50 feet from the alignment shown on the plans.

The following paragraph shall be added following paragraph two:

Spotting shall be completed prior to the removal of any existing stripes. Existing striping and markings shall be removed prior to painting, but in no case shall any section of street be left without the proper striping for more than 24 hours, or over weekends or holidays.

310-5.6.8 Application of Paint. Delete the third and fourth paragraphs and replace with the following:

Traffic and parking lot stall stripes and pavement markings on new surfacing shall be applied in two (2) coats, except where otherwise shown on the plans. The first coat of paint shall have dried for two (2) weeks before application of the second coat on existing surfacing, traffic stripes and pavement markings may be applied in one coat.

Add the following paragraphs:

> The completed pavement markings shall have clean and well-defined edges and shall conform to the dimensions shown on the plans, except that minor variations may be accepted by the Owner Representative.
>
> Drips, overspray, improper markings, and paint tracked by traffic shall be immediately removed from the pavement surface by blast cleaning or other methods approved by the Owner Representative. All such removal work shall be at the Contractor's expense.

310-5.6.11 Pavement Markers
All pavement markers shall comply with Section 85 of the State of California Standard Specifications. Non-reflective markers shall be ceramic. All new markers shall have glass faces of be 3M Series 290.

SECTION 314 – TRAFFIC STRIPING, CURB AND PAVEMENT MARKINGS, AND PAVEMENT MARKERS

314-2 REMOVAL OF TRAFFIC STRIPING AND CURB AND PAVEMENT MARKINGS

314-2.1 General

The Contractor shall remove all existing thermoplastic traffic striping and pavement markings prior to application of slurry seal by a method approved by the Engineer.

314-4.3.5 Application
Each coat of paint for any traffic stripe, including glass beads, shall be applied in one pass of the striping machine, regardless of the number, widths and patterns of individual stripes involved.

One 2-lane streets, when the first coat of the centerline stripe is applied in the same direction as the stationing increases, the right-hand spray gun of the 3 spray guns used to apply a double yellow stripe shall be used to apply a single yellow stripe. When the first coat of the centerline stripe is applied in the direction as the stationing decreases, the left-hand gun of the 3 spray gun used to apply double yellow stripe shall be used to apply a single yellow stripe. The second coat of centerline striping shall be applied in the opposite direction that the first coat was applied.

A 1-coat, 3-inch (75 mm) wide black stripe shall be painted between the 2, 4-inch (100mm) wide yellow stripes of a double traffic stripe. If the 2, 4-inch (100 mm) wide yellow stripes are to be applied in 2 coast, the black stripe shall be applied concurrently with the second yellow stripe.

On existing pavement surfaces, traffic striping and pavement markings shall be applied in 1 coat. Paint to be applied in 1 coat shall be applied at an initial rate of 1 gallon per 107 square feet, unless otherwise specified in the Special Provisions. The final rate shall be approved by the Engineer.

On new pavement surfaces, traffic striping (except the black stripe between the yellow stripes of the double traffic stripes_ and pavement markings shall be applied in 2 coats unless otherwise shown on the plans or specified in the Special Provisions. If the paint is applied in 2 coats, the first coat shall be thoroughly dry before the second coat is applied.

Paint is to be applied in 2 coast shall be applied at the initial trails as shown;

Paint Type	First Coat (sq ft per gallon)	Second Coat (sq ft per gallon)
Waterbone Paint	215	215
Acetone-Based Paint	360	150

The final application rates shall be approved by the Engineer. The volume of paint applied shall be measured by inserting a calibrated rod into the paint tank. At the option of the Engineer, if the striping machine is equipped with paint gauges, the volume of paint may be determined by using the paint gauges.

Glass beads shall be mechanically applied to the surface of each coat of paint, except black paint, prior to the paint setting. Glass beads shall be embedded to a depth of one-half of their diameter. Glass beads shall be applied at a rate of 5 pounds per gallon of paint unless

otherwise specified in the special provisions or directed by the Engineer. The amount of glass beads applied shall be measured by inserting a calibrated rod into the glass bead tank of the striping machine.

PART 6 – TEMPORARY TRAFFIC CONTROL

SECTION 600 – ACCESS

600-1 GENERAL

Ten (10) working days prior to starting work, the Contractor shall distribute construction notices to residents within 500 feet of the project, describing the project and indicating the limits of construction. The Owner will provide the notices.

Forty-eight (48) hours prior to the start of construction, the Contractor shall distribute to the residents a second written notice prepared by the Owner clearly indicating specific dates in the space provided on the notices when construction operations will start for each block or street. An interruption of work at any location in excess of 14 calendar days shall require re-notification. The Contractor shall insert the applicable dates and times at the time the notices are distributed.

The written notices will be prepared by the Owner, but shall be completed and distributed by the Contractor. Errors in distribution, false starts, acts of God, strikes or other alterations of the schedule will require Contractor re-notification using an explanatory letter furnished by the Owner.

600-2 VEHICULAR ACCESS

The Contractor shall install and maintain in place “NO PARKING-TOW AWAY” signs (even if streets have posted “NO PARKING” signs) which shall be posted at least forty-eight hours in advance of the need for enforcement. The signs will be provided by the Owner at no cost to the Contractor. However, the Owner reserves the right to charge $2.00 per sign following any excessive abuse or wastage of the signs by the Contractor. In addition, it shall be the Contractor’s responsibility to notify the Owner’s Police Department at (949) 644-3717 for verification of posting at least forty-eight hours in advance of the need for enforcement. Owner “Temporary Tow-Away, No Parking” signs are available at the Public Works Department public counter.

The Contractor shall print the hours and dates of parking restriction on the “NO PARKING - TOW AWAY” sign in 2-inch high non-erase letters and numbers. A sample of the completed sign shall be reviewed and approved by the Engineer prior to posting.

(Following paragraph is optional for covering street sweeping signs and parking meters and posting temporary permit parking signs.)

After posting temporary ”NO-PARKING-TOW AWAY” signs, the Contractor shall cover street sweeping signs and parking meters, on those streets adjacent to the construction with a “PERMIT PARKING ONLY” sign, in a manner approved by the Engineer. The contractor shall also cover all street sweeping signs on the opposite side of the street from where he has posted the “PERMIT PARKING ONLY” signs, in a manner approved by the Engineer. Immediately after construction is complete and the alley is opened to traffic, the Contractor shall remove all signs and uncover the street sweeping signs. Owner “PERMIT PARKING ONLY” signs are available from the Engineer.

600-3 PEDESTRIAN ACCESS

Pedestrian access to all storefronts, offices, residences, etc., within the limits of work must be maintained at all times. The Contractor shall cooperate with the Engineer to provide advance notice to any and all establishments whose access will be impacted by construction operations, particularly sidewalk construction.

SECTION 601 – TEMPORARY TRAFFIC CONTROL FOR CONSTRUCTION AND MAINTENANCE WORK ZONES

601-1 GENERAL

The Contractor shall furnish and install signage, barricades, delineators, yellow safety ribbons, up to four (4) changeable message signs (CMS), and any other measures deemed necessary by the Engineer to safely direct the public around areas of construction, and into and out of the affected establishments. Messages for the CMS shall be updated by the Contractor as directed by the Engineer.

Project Identification Signage
Contractor shall provide the following:

A. Provide 8’ x 4’ foot long project sign of exterior grade plywood and wood frame construction, painted, with exhibit lettering by professional sign painter to Architect’s design and colors.
B. List title of Project, names of Owner, Architect and Contractor.
C. Erect on site at Location determined by Owner.
D. Sign shall remain in place through construction period and shall be removed only after dedication of the project, or at a time determined by the Owner.
E. Provide temporary directional signs for construction personnel and visitors.
F. No other signs shall be allowed except those required by law and those indicated within these Special Provisions.

601-2 TRAFFIC CONTROL PLAN (TCP)

Typical TC Plans

The Contractor shall submit to the Engineer, at least five working days prior to the pre-construction meeting, a traffic control plan showing typical closures and detour plan(s). The Contractor shall be responsible for processing and obtaining approval of a traffic control plans from the Engineer. The Contractor shall adhere to the conditions of the traffic control plan. Typical closures shall conform to the provisions of the WORK AREA TRAFFIC CONTROL HANDBOOK (W.A.T.C.H), Latest Edition. Traffic control and detours shall incorporate the following items:

1. Emergency vehicle access shall be maintained at all times.

2. The locations and wordings of all barricades, signs, delineators, lights, warning devices, parking restrictions, and any other required details shall ensure that all pedestrian and vehicular traffic will be handled in a safe manner with a minimum of inconvenience to the public.

3. All advanced warning sign installations shall be reflectorized and/or lighted.

4. The Contractor shall accommodate the Owner’s trash collection. If the Contractor elects to work on a street or alley during its trash collection day, it shall be the Contractor’s responsibility to make alternative trash collection arrangements by

contacting the Owner's Refuse Superintendent, at (949) 718-3466 and all affected property Owners.

5. At a minimum, the Contractor shall maintain one lane of traffic in each direction at all times when completing the work. Temporary striping may be required and shall be shown on the TCP.

6. The Contractor will not be allowed to close alleys or streets. Lane closures may be approved by the Owner Engineer, if necessary to complete the work if it does not cause any other impacts to residents, such as loss of street parking. The Contractor shall make special accommodations to provide access for residents with disabilities where any lane closures may exist.

7. Sidewalk closures in non-residential areas, or as determined by the Owner, shall be set with barricades and SIDEWALK CLOSED signs on barricades at the closure and SIDEWALK CLOSED USE OTHER SIDE signs on barricades at the closest crosswalk or controlled intersection.

8. Sidewalk closures in residential areas, or as determined by the Owner, shall be set with barricades and SIDEWALK CLOSED signs on barricades at the closure.

9. Bike lane closures shall have BIKE LANE CLOSED AHEAD, BIKE LANE CLOSED, and SHARE THE ROAD/BICYCLE WARNING (combination) signs mounted on barricades in order on the approach and at the closure.

10. Operation of the CYC allowing pedestrian and vehicular traffic and access to the parking lot and facility during construction.

PART 8 - LANDSCAPING AND IRRIGATION

SECTION 800 – MATERIALS

800-1 LANDSCAPE MATERIALS

800-1.1 Topsoil

800-1.1.1 General

Topsoil shall be Class A (imported).

800-1.2 Soil Fertilizing and Conditioning Materials

800-1.2.3 Commercial Fertilizer

Commercial Fertilizers shall be delivered in sacks with the manufacturer's label showing weight and analysis attached to each sack.

The following commercial fertilizer and soil preparation shall be for bid purposes only. Exact quantities and recommendations may be determined by the soil fertility and agricultural suitability test to be prepared by **Waypoint Analytical** or approved equal testing facility**. Contact: Joe Kiefer 714-282-8777** Tests shall be provided by the Contractor at no additional cost to the Owner and shall be included in the base bid. Test shall be performed after final

grading has been completed and approved by the Owner. All areas to be landscaped with a slope of 3:1 or less shall be cross-ripped or otherwise tilled to a depth of 18 to 24 inches. Uniformly spread and cultivate amendments thoroughly by means of mechanical tiller into top 6" of soil in all planting areas. Application rate per 1,000 square feet:

Commercial Fertilizer 6-24-24XB	25 pounds
Soil Sulphur	20 pounds
Granular Gypsum	100 pounds
Nitrogen stabilized sawdust ("Greenbook" – Type I Organic Amendment)	6 cu yds

Planting Tablets: Provide slow-release type with potential acidity of not more than 5 percent by weight containing the following percent's by weight of nutrients listed; 20-nitrogen, 10-phosphoric acid, 5-potash, 2.6 combined calcium, 1.6-combined Sulphur 0.35-iron (elemental) from ferrous sulfate. Provide in 21 gram tablets manufactured by Agriform, or other approved.

Landscape areas with gradients greater than 3:1 shall receive a uniformity broadcast application of the following:

300 lbs./Acre Nitroform (38-0-0, WIN 27%)
600 lbs./Acre 6-24-24XB

1. For amending of turf and general landscape areas on slopes greater than 3:1 scratch the surface of the soil, if safe and feasible to do so, prior to broadcasting fertilizers. Fertilizers can then be broadcast at the rates indicated in the Soils Fertility and Agricultural Suitability Report per section 800-1.2.3, followed with one or two thorough irrigations to move fertilizers into the rootzone.

800-1.2.4 Organic Soil Amendment.

Paragraph 1 shall be deleted and replaced with the following: **Organic Soil amendment material shall conform to Type 1 plus Redwood Shavings, as supplied by Aguinaga Company, (949) 786-9558 or equal,** unless otherwise designated. Delete paragraph references to Type 2 and Type 3 soil amendments.

800-1.2.5 Mulch.

Sentence one of paragraph one shall be deleted and replaced with the following:

Mulch: **Provide 'forest floor' (0″- 4″) as supplied by Aguinaga Company, (949) 786-9558, or approved equal.** Submit sample for review and approval by Owner Inspector prior to material delivery on-site.

800-1.2.6 Soil Herbicide.
Landscape areas:

A commercially manufactured non-selective herbicide ("Round-up" or approved equal) for total control of vegetation products shall meet all federal and state regulations pertaining to the use of such substances. Application and rate of application shall follow manufacturer's recommendation. Application shall not be made until obtaining written approval from the

Owner. Following Owner approval of Contractor herbicide, Contractor shall apply herbicide to all landscape areas. Such application shall be performed in consideration of overall construction schedule and operation so as not to disrupt or interfere with the project schedule and time line.

800-1.4 Plants

800-1.4.1 General. Subsection 800-1.4.1 shall be deleted and replaced with the following:

A representative number of plants may be inspected and approved at the nursery by the Owner Representative prior to shipment to the planting site. Prior to such visit, Contractor shall submit 3" x 5" color photographs of all proposed tree and shrub material for Owner's review. Photos shall indicate proposed material and picture shall indicate material separated from the surrounding nursery stock to size and condition of proposed material to be evaluated. Photographs of all trees shall include a person, with a height of at least 5'-6". Photos shall be submitted seven (7) calendar days prior to specified plant material review at nursery site. Plants shall be inspected for size and condition of root growth, insects, injuries and latent defects. Label at least one tree and one shrub of each variety with a securely attached waterproof tag bearing legible designation of botanical and common name. The Owner reserves the right to reject entire lots for plants represented by defective samples. Plant condition shall be in accordance with the American Standard for Nursery Stock (ANSI Z60.1-1996). All plants shall have a growth habit normal to the species and shall be sound, healthy, vigorous, and free from insect pest, plant diseases, sun scalds, fresh bark abrasions, excessive abrasions, or other objectionable disfigurements. Tree trunks shall be sturdy and well hardened off. All plants shall have normal well-developed branch systems, and vigorous and fibrous root systems which are neither root nor pot-bound and are free of kinked or girdling roots. Other than the normal side pruning during the growth period, no pruning shall be done prior to inspection at the nursery. The size of the plants will correspond with that normally expected for species and variety of commercially available nursery stock, or as specified in the Contract Drawings. The minimum acceptable size of all plants, measured before pruning with the branches in normal position, shall conform with the measurements, if any, specified on the Contract Drawings in the list of plants to be furnished. Plants larger in size than specified may be used with the approval of the Owner, but the use of larger plants will make no change in contract price. Bare root plantings in publicly maintained areas shall be done only with special approval of Owner.

Quantities and Types. Plant materials shall be furnished in the quantities and/or spacing as shown or noted for each location, and shall be of the species, kinds, sizes, etc., as symbolized, and/or described in the Plant Legend, as indicated on the Contract Documents. The landscape Contractor is to verify all sizes and quantities on plans. Installation and use of substitute items shall not be made until the Contractor is in receipt of written approval from the Owner. **Substitution Proposals for plant material must be accompanied by substantive written proof of non-availability of material originally specified prior to bid opening.**

800-1.4.2.1.9 Fertilizer.

A. **Root Growth Stimulant: Stimulant shall be Tri-C Michimichi Kelp Vitamin B-I or equal, as manufactured by Cal-Liquid, Cooke, Chican, Ortho, or other approved equal.**

B. Fertilizer will not be used at time of planting. After four months, use a light application of 20:10:5 approximately 1/2 lb. nitrogen per tree cultivated into soil.

800-1.4.5 Sod (turf grass)

Turf Sod shall be Bandera Bermuda Grass (42" wide rolls), provided by West Coast Turf. Contact: John Marman (951) 272-7720.

Product Delivery, Storage and Handling

A. Protection and Delivery of Sod:

1. Sod for site planning shall be delivered to planting site within twenty four (24) hours of harvest. Sod shall be refrigerated immediately after harvest prior to transportation. Sod shall remain moist at all times prior to planting.

2. Deliver materials to site in original unopened containers bearing manufacturer's guarantee chemical analysis, name, trademark, purety, germination, and conformance to State law.

3. Deliver materials with legible waterproof identification labels.

4. Protect material during delivery to prevent damage.

5. The Contractor shall notify the Owner's Representative seven days prior to delivery of all materials and shall submit an itemized list for each delivery.

B. Storage:

1. Store plant material in shade and protect from weather.

2. Protect material from damage and theft.

JOB CONDITIONS

A. Planting:

Perform actual planting only when weather and soil conditions are suitable according to locally accepted practices.

B. Scheduling:

Install trees and container stock plant material before Sodded Lawn and Grass installation.

REPLACEMENTS

A. Replacement

Any materials found to be dead, missing, or in poor condition during the maintenance period shall be replaced immediately. The Owner's Representative shall be the sole judge as to the condition of materials. Materials to be replaced within the guarantee period shall be replaced by the Contractor within 15 days of written notification by the Owner.

Execution

A. Laying Sod:

1. Soil moisture. all areas to receive planting shall be irrigated prior to planting. Soil shall be maintained in a constant moist condition but well below field capacity. Extreme care must be exercised to prevent over-watering to prevent soil-compaction or creating grade irregularities by heavy equipment.

2. The Contractor shall provide and install the type and quantity of turf grass sod as shown on the Contract Drawings and specified herein. Only long roll sod of the variety specified shall be utilized.

1. Lay sod to form a solid mass with tightly fitted joints. Butt ends and sides of sod strips; do not overlap. Stagger strips to offset joints in adjacent courses. Work from boards to avoid damage to subgrade or sod. Tamp or lightly roll to ensure contact with subgrade. Work sifted soil into minor cracks between pieces of sod; remove excess material from sodded areas to prevent smothering.

   NOTE: Mesh backing material shall be removed from sod at the time that sod is laid. The Contractor shall clean up and dispose, off-site, all mesh material and surplus sod.

4. Thoroughly water soil with a fine spray immediately after planting to saturate the sodded area to a depth of four inches.

5. After two days of thorough watering, the Contractor shall curtail watering to permit re-rolling of the sodded area to ensure proper contact with subgrade.

6. After the second rolling of the sod, the Contractor shall routinely water, fertilize and maintain sodded area until the termination of the specified maintenance period and until acceptance by the Owner.

H. Maintenance and Observation:

1. Turf type Bermuda shall be no more than 3/4 to 1 inches height at time of the first mowing. All turf areas shall be mowed, removing no more than 1/3 of the turf grass blade, and all bare spots shall be resodded prior to beginning of the maintenance period.

2. Conduct a complete review of all landscape construction items at the end of the landscape construction period to establish the time for beginning of the

maintenance period. Notify the Owner's representative at least seven days in advance of review.

3. Maintain lawns to watering, fertilizing, weeding, mowing, trimming, and other operations such as rolling, regarding and replanting as required to establish a smooth, acceptable lawn, free of eroded or bare areas.

CLEAN-UP

A. After all planting operations are complete, remove all trash, excess soil, and rubbish from the property. Repair scars, ruts, or other marks in the ground caused by this work and leave the ground in a neat and orderly condition.
B. Leave the site in broom-clean condition, and wash down all paved areas within the project site. Leave walks in clean and safe condition.
C. Protect landscape work and materials from damage due to landscape operations, operations by other contractors, and trades and trespassers. Maintain protection during installation and maintenance periods. Treat, repair, or replace damaged landscape work as directed.

800-1.5.3 Tree Stakes. The first paragraph shall be replaced with the following;

Tree stakes shall be sharpened 2" diameter, 12′ long lodgepole pine, treated in accordance with Section 204-2.2. Stake shall be one piece and free from splits. Trees installed as 36" box and larger shall be installed with guy anchors (3/tree).

The third paragraph shall be replaced with the following:

Deadman stakes shall be duckbills or 2 x 4 inch redwood 18 inches long. Covers for wire shall be 3/4-inch Class 200 PVC pipe - 3 feet long.

The following paragraph shall be added at the end of the subsection:
A minimum of two (2) supporting tree ties or three (3) guy anchors shall be used for each tree. Tree ties shall be V.I.T. twist brace Model TB24.

800-1.5.5 Root Barriers

Root barriers shall be 24″ deep and as provided by DeepRoot Corp. (800) 458-7668, or approved equal. Installation shall be per manufacturer's specifications.

800-1.5.6 Arbor Guards

All trees planted in turf areas shall be planted with continuous, secured **Arborgard+ protective sheath at base of trunk, or approved equal. Install per manufacturers specifications. Available from: Gemplers (800) 382-8473.**

800-2 IRRIGATION SYSTEM MATERIALS

800-2.1.1 General

The manufacturer's directions and detail Contract Drawings shall be followed unless directed by the Owner Representative or shown differently in the plans and specifications.

800-2.1.3 Plastic Pipe for Use With Solvent Weld Socket or Threaded Fillings. Add the following before the first paragraph:

General. Use only new materials of brands and types noted on Contract Drawings specified herein, or approved equals.

Paragraph 2 shall be deleted and replaced with the following:

PVC Pressure Main Line Pipe shall be Class 315 PVC solvent weld pipe with Schedule 80 fittings for pressure main pipes 2 inches and larger.

PVC Schedule 40 with solvent welded joints for pressure main piping of lesser diameter. PVC Schedule 40 solvent welded piping shall be used for all non-pressure lateral line piping.

All PVC pipe must bear the following markings:

1. Manufacturer's name
2. Nominal pipe size
3. Schedule or class
4. Pressure rating in P.S.I.
5. NSF (National Sanitation Foundation) approval
6. Date extrusion
7. U.P.C. shield logo (IAPMO approval)

All fittings shall bear the manufacturer's name or trademark, material designation, size, applicable I.P.S. schedule and NSF seal of approval

Solvent cement and primer for PVC solvent-weld pipe and fittings shall be of type recommended by the manufacturer and shall follow installation methods prescribed by the pipe manufacturer.

All irrigation pipe using domestic water shall be white in color.

800-2.2.2 Gate Valves. The text of this subsection shall be deleted and replaced with the following:

All valves shall be as identified on the Construction Documents and per Owner review and approval.

800-2.2.4 Remote Control Valves

Remote control valve manufacturer and sizes shall be as indicated in plans and legend.

800-2.2.6 Quick-Coupling Valves and Assemblies. The text of this subsection shall be deleted and replaced with the following paragraph:

Quick-coupling valves shall have a brass two-piece body designed for working pressure of 150 PSI. The quick-coupling valve shall have a built-in flow control and self-closing valve and shall be supplied in 1-inch size unless otherwise required. The valve shall be equipped with a locking yellow vinyl cover.

800-2.2.7 Valve Boxes. Delete the first paragraph and replace with the following:

Valve boxes and lids shall be black in color when using domestic water and as detailed on the Plans. The boxes shall be covered with an etched polyethylene face with an ultraviolet inhibitor. The lid shall be plastic, lockable, and embossed with the valve station number on its topside. Sizes and manufacturer of the valve boxes and lids shall be as indicated on the Standard Contract Drawings.

800-2.2.8 Master Control Valves.

The master control valve manufacturer and size shall be as indicated on plan and legend.

800-2.3 Backflow Preventer Assembly

Unless otherwise instructed by the Owner Inspector, backflow assemblies shall consist of a brass reduced pressure/backflow prevention device with “Wye” strainer and 60 mesh screen as detailed and called out on the Project Plans.

800-2.4 Sprinkler Equipment

The text of this subsection shall be deleted and replaced with the following:

Irrigation bodies and nozzles shall be as indicated on plan and legend. Substitutions shall not be allowed unless by written authorization from the City of Gardena.

Irrigation bodies and nozzles shall feature low head drainage, pressure regulating, and pressure compensating features. Unless otherwise approved, all pop-ups and fixed riser assemblies shall consist of plastic and stainless-steel materials.

Smaller radii turf irrigation equipment shall consist of 6-inch pop-ups. All smaller radii shrub and groundcover irrigation equipment shall consist of 6” pop-up bubbler or micro spray, unless otherwise approved by the Owner.

800-3 ELECTRICAL MATERIALS

800-3.2.1 Conduit. [Replace paragraph with the following]:

Conduit shall be Schedule 40 PVC pipe as called out on the plans. Install per plans. Conduit shall conform to the applicable provisions of subsection 800-2.1.3.

800-3.2.2 Conductors

The electrical system shall be installed in accordance with the National Electrical Code most recently adopted by the Owner. Connections between the automatic controllers and the

electric control valves shall be made with direct burial copper wire AWG-U.F. 600 volt. Pilot wires shall be a different color wire for each automatic controller. Common wires shall be white with a different color stripe for each automatic controller. Install in accordance with valve manufacture's specifications and wire chart. In no case shall wire size be less than #14.

Wiring shall occupy the same trench and shall be installed along the same route as pressure supply or lateral lines wherever possible. Install wires inside Schedule 40 Conduit anywhere it is not possible to place in pipe trench, or where wires must go under pavement. Conduit size shall be large enough to contain all necessary wires. Minimum conduit size shall be 2".
Where more than one (1) wire is placed in a trench, the wiring shall be taped together at intervals of ten (10) feet.

An expansion curl should be provided within three (3) feet of each wire connection and at least every one hundred (100) feet of wire length on runs more than one hundred (100) feet in length and also at each change of direction. Expansion curls shall be formed by wrapping at least five (5) ruins of wire around a one-inch diameter pipe, then withdrawing the pipe.

All splices shall be made with 3M - DBY wire connector, or approved equal.
Use one splice per connector sealing pack.

Field splices between the automatic controller and electrical control valves will not be allowed without prior approval of the Owner.

SECTION 801 - INSTALLATION

801-1 GENERAL

Inspection will be required for the following parts of the work:

a. At completion of rough grade prior to incorporation of soil amendments.

b. Irrigation coverage test prior to initiating planting operations.

c. At completion of incorporation of soil amendments and fine grading.

d. Prior to digging plant pits for trees and shrubs.

e. During backfilling of plant pits with amended backfill.

f. Maintenance period shall not begin until final installation inspection is made, and establishment is verified. Owner inspector shall approve commencement date of maintenance prior to the commencement of said maintenance.

g. Final review and acceptance at the end of the maintenance period.

The landscape contractor or subcontractor shall provide a licensed Pest Control Advisor (PCA) prior to applying herbicide. The PCA will be responsible for preparing and approving a Pest

Control Recommendation and providing Safety Data Sheets (SDS). These items shall be included with the herbicide submittal.

The Contractor is responsible for clearing and grubbing, pruning and removing tree roots that interfere with the work. The Contractor shall submit recommendations by its arborist to the Owner for review for safely pruning and removing tree roots. No roots shall be pruned or removed unless this submittal is returned to the Contract as satisfactory. Prior to the submittal, the Contractor shall arrange to meet with the City Arborist at the site to discuss Owner standards and requirements.

If required, the submittal shall adhere to the following guidelines.

1. Root Pruning

   a. Whenever possible, root pruning shall only be done on one side of the tree unless specifically authorized by the City Arborist.

   b. Roots shall be cleanly severed using a root-pruning machine, ax or comparable tool.

2. Arbitrary Root Cut

   a. A straight cut with a root-cutting machine shall be made.

   b. The cut shall be a maximum 14” below grade for sidewalks and 26” for curbs, and shall be made as far away from the tree base as possible.

3. Selective Root Pruning

   a. This process involves selectively removing offending roots when a tree trunk or root flare is less than 2 feet from the sidewalk and/or the size, species or condition of the tree warrants a root cut to be hazardous to the tree or when there is only one minor offending root to be removed and/or the damage is minimal (i.e., only one panel uplifted, etc.)

   b. Selective root pruning shall be performed with an ax or stump-grinding machine instead of a root-pruning machine.

   c. All tree roots that are within the sidewalk construction area shall be removed or shaved down.

   d. Roots greater than two inches in diameter that must be removed, must be pre-approved by the City Arborist.

   e. Roots shall be selected for removal on the basis that will have the least impact on the health and stability for the tree.

801-2 EARTHWORK AND TOPSOIL PLACEMENT

801-2.1 General

The Contractor shall apply water as necessary to provide ideal moisture content for tilling and for planting as, herein specified.

801-2.2 Topsoil Preparation and Conditioning

801-2.2.2 Fertilizing and Conditioning Procedures. The first paragraph of the subsection shall be deleted and replaced with the following:

> The planting areas shall be brought to rough grade whereupon Fertilizer and Soil Conditioning required for the native soils for the intended landscape planting shall be added based upon the recommendations of Soils Fertility and Agricultural Suitability Report. (See Section 800) The Contractor, at no additional cost to the Owner, shall make two additional soils tests for agricultural fertility and suitability and fertilizer and amendment recommendations of all planting areas upon completion of excavation, topsoil backfilling, and grading. The Contractor shall amend it as necessary to comply with the soils test report at no additional cost to the Owner.

801-2.2.3 Weed Control, Grow and Kill Protocol: The following subsection shall be added:

> Kill and remove all existing weeds from site areas utilizing post-emergent herbicide.
>
> Upon completion of the irrigation system and after all designated shrub and ground covers, existing weeds and growth have been removed from the planting areas. All areas shall be watered four (4) times daily until weed seeds have germinated for approximately 21 days or unless otherwise directed by the Engineer. Thereafter, watering shall cease for three (3) days to be followed by the spraying of a systemic herbicide containing the active ingredient glyphosate (Roundup-Pro, or approved equal). Spraying shall be at the labeled rate compatible with the eradication rate for the target weed species and shall be performed under the direction of a registered **Pest Control Advisor**. After allowing sufficient time for the herbicide to kill all remaining weeds (2 weeks minimum), the areas to be landscaped shall be raked or hoed as directed by the Engineer to remove any remaining weed stubble. All areas shall be watered for an additional 14 (fourteen) day period and then receive an additional application of the systemic herbicide per manufacturer's recommendation.

801-2.3 Finish Grading. The following shall be added to the last sentence of the second paragraph.
…except where water is designed to flow over the same.

The following paragraphs shall be added following paragraph two:

Finish grades shall be those indicated on the Contract Drawings or as may be controlled by existing installations. Grades not otherwise indicated shall be uniform, and straight graded between points where elevations are noted. Minor modeling of the ground surface may be required. Landscape areas to receive turf shall be rolled with a water drum in a north/south and then east/west direction. Low spots and high spots in the terrain shall be backfilled and tamped or bladed and spread. The resultant grade shall be smoothly, evenly contoured and compacted to 85%. The gradient shall be as noted on plans.

Grading shall provide for the natural run-off of water without low spots or pockets. Flow lines shall be set by instrument and shall be the maximum gradient possible.

801-4 Planting

801-4.3 Layout and Plant Location

Quantities for shrubs and groundcovers shown on the legend are for estimate purposes only. Final quantities for plant materials installed shall be governed by the indicated plant spacing. Quantities for trees shall be verified in bid documents and discrepancies between the planting plans and the bid schedule shall be noted on bid schedule by Contractor at the time of bid submittal.

In the event that designated plant location is found in conflict with underground utility or structure during the planting operation an alternate location will be selected by the Owner. The Contractor shall be responsible to notify utility companies for the spotting of underground facilities prior to plant acquisition and to make precautionary potholes where conflicts would be indicated on the plans or by field notations by utility representatives. The cost for utility notification and potholing shall be included in the other work items and no additional compensation will be allowed therefore.

Proposed tree locations, as indicated on plans shall be staked by contractor for review and approval by Owner prior to digging of plant pits for planting. Stakes shall minimum of 6’ in length and color coded to indicate variety of proposed tree planting at each of the staked locations. Review and approval of provided color-coded stake locations, with modifications/adjustments as necessary shall be provided by Owner prior to commencement of tree planting operations.

Container shrubs and groundcovers shall be placed on finish grade at locations indicated on planting plans for review and approval prior to planting. Contractor shall notify Owner 48 hours prior to scheduled review of containerized shrubs and groundcovers on grade

801-4.4 Specimen Planting [Insert before first paragraph]:

The planting pits for trees shall be excavated twice the diameter and the depth of the rootball.

Set the Tri-C or Grow-Power or equal tablets to be used with each plant on the top of the root ball while the plants are still in their containers so the required number of tablets to be used in each hole can be easily verified.

3 tablets per 15 gallon
4 tablets per 24 inch box

5 tablets per 30 inch box
6 tablets per 36 inch box
7 tablets per 42 inch box
8 tablets per 48 inch and larger boxes

Planting shall be governed by the following requirements:

801-4.5 Tree and Shrub Planting

The Contractor shall amend backfill as necessary per the soils test report at no additional cost to the Owner. (Refer to Sections 800 and 801-2.3.2). **The following soil amendments and fertilizer guidelines shall be used for bid purposes only.** Fill holes with backfill mixtures as specified below:

1. The following material shall be thoroughly blended and used as a backfill mix in the surface 12” around trees and shrubs, and the backfill soil, 12” below finish grade should be amended if specified by the soil test report with only gypsum and / or iron sulfate. No mixing for individual planting holes will be permitted. Mix planting soil prior to backfilling and stockpile at the site. The iron sulfate should not contact cement surfaces since severe staining could occur.

   8 parts by volume screened on-site soil
   2 parts by volume Nitrogen Stabilized Organic Amendment
   1 ½ lbs. Iron Sulfate per cu. yd. of mix
   1 lb. 12-12-12 per cu. yd. of mix
   5 lb. gypsum per cu. yd. of mix
   1 lb. of soil sulfar per cu. yd. of mix

2. Place plants near respective pits. Set the tablets to be used with each plant on the top of the root ball while the plants are still in their containers so the required number of tablets to be used in each hole can be easily verified.

   1 tablet per 1-gallon container
   2 tablets per 5-gallon container
   3 tablets per 15-gallon container

3. Remove all plants from their containers and set in plant pits.

4. Fill to proper height with amended backfill to receive the plant and thoroughly tamp the mixture before setting the plant.

5. Set plant in upright position in the center of the hole and compact the backfill mixture around the ball or roots.

6. Thoroughly water each plant when the hole is one-half filled. After water has completely drained, place planting tablets per detail. The remainder of the hole shall then be backfilled.

7. After watering, tamp the soil in place until the surface of the backfill is level with the surrounding area and the crown of the plant is at the finished grade of the surrounding area. Do not backfill around trunks or stems.

8. After backfilling, an earthen basin shall be constructed around each plant. Each basin shall be of a depth sufficient to hold at least six inches of water. Basins shall be the same size as the container size of each individual plant. The basins shall be constructed of amended backfill material. This berm shall be leveled to finished grade alter the 60th day of the maintenance period, and prior to the ground cover hydroseeding.

9. Immediately after planting, apply water to each tree and shrub by means of a hose. Apply water in a moderate stream in the planting hole until the material about the roots is completely saturated from the bottom of the hole to the top of the ground.

10. Apply water in sufficient quantities and as often as seasonal conditions require to keep the planted areas moist at all times, wet below the root system of grass and plants. Generally, water once each day for 7 days in cool seasons, for 14 days in hot weather. Berms around shrubs and trees in slopes shall be maintained for 60 days following tree planting and then removed.

11. Pruning - Pruning shall be limited to the minimum necessary to remove injured twigs and branches and to compensate for loss of roots during transplanting, but never to exceed one-third of the branching structure. Upon approval of the Owner Representative, pruning may be done before delivery of plants but not before plants have been inspected and approved by the Owner.
12. No trees shall be planted within 6 feet of paved surfaces, unless specifically indicated on plans. Those trees noted on plans to occur within 6’ of curbs and/or paving shall receive continuous root barriers per Section 800-1.5.5.

801-4.6 Planting Staking and Guying.

The text of the entire subsection shall be deleted and replaced with the following paragraph:

All staking and guying shall be in accordance with the Plans, Details, and Specifications.

801-4.7 Ground Cover and Vine Planting.

The second paragraph shall be deleted and replaced with the following:

Ground cover shall be planted in moist soil and spaced as indicated on the plant legend.

801-4.8 Lawn Planting

See section 800-1.4.5 Sod (turf grass).

801-4.8.1 General. This section includes the following, as noted on plans:

801-4.9.3 Seeding and Mulching

Mulch installation shall consist of placing **3″ thick layer 'forest floor' (0-4") material equal to or supplied by Aquinaga Company (949) 786-9558** over designated planter areas. See plans for areas of installation. Submit sample prior to purchase and/or placement for approval.

801-5 IRRIGATION SYSTEM INSTALLATION

801-5.1 General

Contractor shall be responsible to notify the Owner prior to start of construction to coordinate on-site inspections. Contractor is responsible for any utility company fees and permit fees and are not reimbursable by the Owner/City.

Due to the scale of Contract Drawings, it is not possible to indicate all offsets, fittings, sleeves, etc., which maybe required. The Contractor shall carefully investigate the structural and finished conditions affecting all of his work and plan his work accordingly, furnishing such fittings, etc., as may be required to meet such conditions.

The work shall be installed in such a manner as to avoid conflicts between planting and architectural features, etc.

All work called for in the Contract Drawings by notes or details shall be furnished and installed whether or not specifically mentioned in the specifications.

The Contractor shall not willfully install the irrigation system as shown on the Contract Drawings when it is obvious in the field that unknown obstructions, grade differences, or discrepancies in area dimensions exist that might not have been considered in engineering. Such obstructions or differences should be brought to the attention of the Owner Representative. In the event this notification is not performed, the Irrigation Contractor shall assume full responsibility for any revisions necessary and shall perform such at \his own expense.

The fourth paragraph shall be deleted and replaced with the following paragraphs:

The location of connection points shown is approximate. The Contractor shall contact the utility companies and coordinate the installation of the required electrical and water services. Following coordination with the utility companies, the Contractor shall make all necessary provisions to make the service connections called for on the plans at the places indicated or to the nearest acceptable point thereto as approved by the utility companies and the Owner Representative. Verification of the point of connections with the utility companies and the Owner Representative shall be obtained by the Contractor prior to the start of work.

All costs for making the service connections shall be paid for by the Contractor, with the exception of any utility company fees and permit fees which are reimbursable by the Owner, as per Section 7-5 "Permits" of the General Provisions.

801-5.1.1 Temporary Repairs

The Owner reserves the right to make temporary repairs as necessary to keep the irrigation system in operating condition. The exercise of this right by the Owner shall not relieve the Contractor of his responsibilities under the terms of the guarantee as herein specified.

801-5.2 Trench Excavation and Backfill.

The second and last paragraph shall be deleted and the following added:

The depth of cover over pipelines and conduits shall be per Contract Documents.

The trenches shall not be backfilled until all required tests are performed. A fine granular material used for bedding and backfill will be placed on all lines. Trenches shall be carefully backfilled with the excavated materials approved for backfilling, consisting of earth, loam, sandy clay, sand, or other approved materials, free from large clods of earth or stones.

The finished surface shall be restored to the grade established prior to excavation. All mounding and divots shall be graded smooth to the satisfaction of the Owner Representative.

If settlement occurs, and subsequent adjustments in pipe, valves, valve/utility boxes, sprinkler heads, lawn or planting, or other construction are necessary, the Contractor shall make all required adjustments.

801-5.2.1 Trenching and Backfilling Under Paving.

Where irrigation lines are called for on the plans to be placed within a sleeve the PVC sleeve to be provided for such work shall be Schedule 40 PVC sleeve.

801-5.2.2 Trenching Adjacent to Existing Trees.

Where it is necessary to excavate adjacent to existing trees, the Contractor shall use all possible care to avoid injury to trees and tree roots. Excavation in areas where two (2) inch and larger roots occur shall be done by hand. All roots two (2) inches and larger in diameter, except directly in the path of pipe or conduit, shall be tunneled under and shall be heavily wrapped with burlap, to prevent scarring or excessive drying. Where a ditching machine is run close to trees having roots smaller than two (2) inches in diameter the wall of the trench adjacent to the tree shall be hand trimmed, making clean cuts through. Trenches adjacent to trees should be closed within twenty-four (24) hours; and where this is not possible, the side of the trench adjacent to the tree shall be kept shaded with burlap or canvas.

801-5.3 Irrigation Pipeline Installation

A minimum of twelve (12) inches clearance shall be maintained between “recycled” irrigation pipelines and non-irrigation pipelines/conduits.

The following paragraphs shall be added at the end of the subsection:

PVC Sleeves shall be required under areas where all hardscape materials shall be installed. Sleeving shall be done per detail on Project Plans (Minimum sleeve dimension shall be twice the diameter of pipe size.

801-5.3.3 Plastic Pipeline.
The following shall be added to the end of paragraph one:

PVC to metal connections shall only be accomplished by PVC male adapters screwed into metal fittings. Teflon tape shall be used on all threaded PVC to PVC, and on all threaded PVC to metal joints.

The following paragraph shall be added following paragraph four:

Handling of PVC Pipe and Fittings. The Contractor is cautioned to exercise care in handling, loading, unloading, and storing of PVC pipe and fittings. All PVC pipe are to lie flat and not to be subjected to undue bending or concentrated external load at any point. Any section of pipe that has been dented or damaged will be discarded and, if installed, shall be replaced with new piping. Pipe and fittings shall not be stored in direct sunlight.

801-5.4 Installation of Valves, Valve Boxes, and Special Equipment

Paragraphs three, four, five, and six shall be deleted.

801-5.5 Sprinkler Head Installation and Adjustment.

801-5.5.2 Location, Elevation, and Spacing.

The third paragraph shall be amended to read as follows:

Sprinkler heads shall be installed 6 inches from the adjacent vertical elements projecting above wade such as walls, planter boxes, curbs, and fences in shrub areas. Sprinkler heads shall be installed 4 inches from adjacent vertical elements projecting above grade such as walkways, walls, planter boxes, curbs, and fences in turf areas.

801-5.7 Flushing and Testing.

801-5.7.1 General. The following paragraph shall preface the subsection:

Flushing of the lines shall be done before quick coupling valves and remote control valves are in place. All open ends shall be piped (temporarily to exhaust flushing water up and out of the trenches.)

No water will be permitted to fall into the trench. Flushing procedure will be to first open the ports nearest the source, then recap, and move progressively towards the end of the line, with only one open port flushing at anyone time.

Amend the last sentence of the first paragraph by adding “and approved in writing” by the Senior Landscape Planner at the end of the sentence.

Add the following paragraph to the end of the subsection:

When the irrigation system is completed, a coverage test shall be performed by Owner Staff to determine if the water coverage for planting areas is complete, adequate, and avoids overspray onto walks, roadways, and buildings as much as possible. The Contractor shall furnish all materials and perform all work required to correct any inadequacies of coverage due

to deviations from the Contract Drawings, or where the system has been willfully installed as indicated on the Contract Drawings when it is obviously inadequate, without bringing this to the attention of the Owner inspector. This test shall be accomplished before any ground cover is planted.

The Contractor shall request the presence of the Owner in writing at least forty-eight (48) hours in advance of testing. The Contractor shall flush and adjust all sprinkler heads for optimum performance and to prevent overspray onto walks, roadways, and buildings as much as possible.

801-5.7.2 Mainline and Lateral Pipeline Pressure Test. Pressure test at the end of the first paragraph shall be amended to read: Mains 6 hrs. at 150 PSI. Laterals 2 hours at 100 PSI.

801-6 MAINTENANCE AND PLANT ESTABLISHMENT

The Contractor shall be responsible for detecting diseases and pests (including rabbits, gophers, groundhogs, rodents) as soon as they are present and shall take immediate action to identify, control, and remove the disease or pest. Pest control programs of all mammals shall be done without extermination and as approved by the Owner's Authorized Representative. Plants shall be maintained in a disease and pest free condition. A licensed **Pest Control Operator** shall be maintained to recommend and apply pesticide, herbicides, and fungicides. Contractor shall be responsible for removal of gophers and moles from site and repair any and all damage attributed to their presence. Damaged plant material due to vertebrate pests (rabbits, gophers, groundhogs, etc.) shall be replaced immediately by Contractor at no cost to Owner. Dead dying and damaged plant material shall be removed at no cost to the Owner.

The maintenance and plant establishment period shall be for a period of **(90)** calendar days. Trees shall have a 1-year warranty beginning after the plant establishment period, after all planting is complete and approved by the Owner in writing. The maintenance period will not commence until all planting has been approved in writing by the Owner.

Maintenance shall include, but not be limited to, all watering, irrigation repair, weeding, mowing, edging, cultivating, spraying, and pruning necessary to keep the plant materials in a healthy growing condition and to keep the planted areas neat and attractive throughout the maintenance period.

The lump sum price paid for the maintenance period shall include all costs for water (from the new water meter installed only), watering, irrigation repair, weeding, mowing, edging, cultivating, spraying, and pruning necessary to keep the plant materials in a healthy growing condition and to keep the plant areas neat and attractive throughout the maintenance period. Upon the 60th day or thereafter, dirt berms around trees and shrubs shall be leveled.

Provide all equipment and means for proper application of water to those planted areas not equipped with an irrigation system.

Protect all planted areas against damage, including erosion and trespassing, by providing and maintaining proper safeguards.

During the maintenance period, all plants and planted areas shall be kept properly watered and weed-free at all times. Irrigation schedule shall comply with AB325 and Certified Irrigation Auditor's parameters.

In order to expedite the plant establishment work, the Contractor shall maintain a sufficient number of men and adequate equipment to perform the work herein specified from the time any planting is done until the end of the final maintenance period.

The Contractor will be relieved from maintenance work when the plant establishment and maintenance work has been completed to the satisfaction of the Owner.

Damage to planting areas shall be replaced immediately when seen by Contractor. Damage observed by the Owner shall be replaced within 24 hours of notification to the Contractor.

Depressions caused by vehicles, bicycles, or foot traffic, are to be filled and leveled. Replant damaged areas.

Apply a pelletized fertilizer blend of 15-15-15 at the beginning and at every 30-day maintenance interval at the rate 350 lbs. per acre until the designated end of the maintenance period. **A 90day maintenance program shall consist of 3 (six) fertilizer periods.**

Apply 25 lbs. Gro-Power Plus per 1,000 square feet at 25th and 55th day of **90 day maintenance period.**

Contractor shall be responsible for removal of rodents, slugs, snails, and cutworms from site as required and repair damage as above.

All paved areas will be broom cleaned and/or washed and maintained in a neat and clean condition at all times, as directed by the Owner. AQMD and WQMP practices shall be observed. Air blowers shall not be allowed.

Replacements. At the end of the maintenance period, all plant material shall be in a healthy growing condition.

During the maintenance period, should the appearance of any plant indicate weakness and probability of dying, immediately replace that plant with a new and healthy plant of the same type and size without additional cost to the Owner.

All trees shall be guaranteed by the Contractor to live and grow in an acceptable upright position for a period of one year after completion and final acceptance by the Owner.

The Contractor, within ten (10) days of notification by the Owner, shall remove and replace all guaranteed plant materials which for any reason fail to meet the requirements of the guarantee. Replacement shall be made with plant materials as indicated or specified for the original planting, and all such replacement materials shall be guaranteed as specified for the original guaranteed materials.

Clean-Up. Upon completion of the work in this section, the Contractor shall clean-up and remove from the area all unused materials and debris resulting from the performance of the work as directed by the Owner.

801-9 GUARANTEE

The text of the subsection shall be deleted and replaced with the following:

The guarantee period shall begin upon written notice by Owner of substantial compliance with plans and specifications has been achieved by Contractor.

Upon acceptance, all construction shall be guaranteed by the Contractor for a period of one year against defects in materials and workmanship.

Any settling of backfill trenches which may occur during the one year guarantee period shall be backfilled, compacted, and transitioned smoothly with adjacent gradients to the Owner's satisfaction by the Contractor without expense to the Owner, including the complete restoration of damaged planting, paving, or other improvements of any kind.

The Contractor, within ten (10) days of notification by the Owner Representative, shall remove and replace all guaranteed plant materials which, for any reason, fail to meet the requirements of the guarantee. Replacement shall be made with plant materials as indicated or specified for the original planting and all such replacement materials shall be guaranteed as specified for the original guaranteed materials.

GUARANTEE FOR IRRIGATION SYSTEM

We hereby guarantee that the irrigation system we have furnished and installed is free from defects in materials and workmanship, and the work has been completed in accordance with the Contract Drawings and specifications, ordinary wear and tear, and unusual abuse, or neglect accepted. We agree to repair or replace any defects in material or workmanship, including settling of backfilled areas below grade which may develop during the period of one year from date of acceptance and also to repair or replace any damage resulting from the repairing or replacing of such defects at no additional cost to the Owner. We shall make such repairs or replacements within 72 hours after receipt of written notice. In the event of our failure to make such repairs upon written notice from the Owner, we authorize the Owner to proceed to have said repairs or replacements made at our expense and we will pay the costs and charge therefore upon demand.

PROJECT:

LOCATION:

AGENCY:

SIGNED:
(Contractor)

ADDRESS:

PHONE:

DATE OF ACCEPTANCE:

801-10 CHARTS, MANUALS, AND CONTRACT DRAWINGS

801-10.1 As-Built Contract Drawings

Contractor shall provide Owner Representative with Landscape Architect signed “as-built” heavy weight drafting film originals of all project construction document plans, reflecting all “as-built” conditions for all project elements and two (2) sets of edge bound plots at the completion of the project at no additional cost to the Owner.

Contractor shall provide two (2) sets of surveyed electronic files in CAD and PDF format. One (1) set shall be delivered to the Owner for permanent recordkeeping purposes.

Contractor shall dimension from two (2) permanent points of reference, building corners, sidewalk or road intersections, etc., the location of the following items:

1. Gate valves
2. Sprinkler control valves
3. Routing of control wiring
4. Rain gauge
5. Quick coupling valves
6. Point of connection components (meters, backflow preventors, etc.)
7. Other related equipment as directed by the Owner
8. Significant changes in routing of lateral lines from those indicated on the plans

Delivery. On or before the date of the final inspection, the Contractor shall deliver the corrected and completed design documents to the Owner. Delivery of the final heavy weight drafting film will not relieve the Contractor of the responsibility of furnishing required information that maybe omitted from the prints.

801-10.2 Controller Charts

As-built Contract Drawings shall be approved by the Owner before the Contractor prepares the controller charts.

Provide two (2) controller charts for each controller supplied.

The chart shall show the area controlled by the automatic controller and shall be the maximum size which the controller door will allow.

The chart is to be a reduced drawing of the actual “as-built” system. However, in the event the controlled sequence is not legible when the drawing is reduced, it shall be enlarged to a size that will be readable when reduced.

The chart shall be a blackline or blueline print and a different color shall be used to indicate the area of coverage for each station.
When completed and approved, the Contractor shall hermetically seal the chart between two pieces of plastic, each piece being a minimum of 10 mils thick.

These charts shall be completed and approved prior to final inspection of the irrigation system.

801-10.3 Manuals of all Equipment and Certificate of Substantial Completion

Operation and Maintenance Manuals. Prepare and deliver to the Owner within ten calendar days after substantial completion of the project, three hard cover binders with three rings containing the following information:

1. Index sheet stating Contractor's and subcontractor’s license numbers, address, and telephone number and list of equipment with name and address of al local supplier’s and manufacturer's representatives.

2. Catalog and specification ‘cut’ sheets materials for all hardscape and softscape and equipment installed under this contract.

3. Guarantee statement. The guarantee for the sprinkler irrigation system shall be made in accordance with the enclosed form. The Contractor shall file a complete copy of all substantial completion forms and irrigation guarantee prior to the acceptance of project by the Owner.

   The guarantee shall be included in the operations and maintenance manual of all equipment throughout the park.

   The guarantee shall be typed onto the Contractor’s letterhead.

4. Complete operating and maintenance instructions on all major equipment.

In addition to the above mentioned maintenance manuals, provide the Owner's maintenance personnel with instructions for major equipment and show evidence in writing to the Owner at the conclusion of the project that this service has been rendered.

801-11 EQUIPMENT

801-11.1 Loose Equipment to be Furnished.

The following subsection shall be added (confirm each item with the Owner Inspector prior to actual turn-over):

The Contractor shall supply as a part of this contract the following tools:

1. Two (2) sets of special tools required for removing, disassembling and adjusting each type of sprinkler and valve supplied on this project.

2. Two (2) five foot valve keys for operation of gate valves.

3. One (1) quick coupler key and matching hose swivel for every five (5) of each type of quick coupling valve installed.

4. Six (6) spray nozzles of each type specified on the legend.

5. One case of spray bodies of each manufacturer specified on the legend.

6. One case of rotors of each manufacturer specified on the legend.

7. Two (2) gate valves - line sized - as specified on the legend.

8. Two (2) keys each for controller and controller enclosure doors.

    a. One RainMaster remote for each controller

The above-mentioned equipment shall be turned over to the Owner at the conclusion of the project. Before final inspection can occur, evidence that the Owner has received material must be shown to the Owner Representative.

801-12 PAYMENT

The payment for the irrigation system and all appurtenant installations indicated on the Contract Drawings and described in these specifications shall be included as part of the Lump Sum Contract Price in the Proposal Bid Form.

The payment for the installation of turf shall be made as part of the Sum Contract Price.

The payment for maintenance of the work per the Contract Drawings and the specifications shall be made as part of the lump sum **Contract Price 90-day Maintenance**.

The payment for the planting and installation of trees, shrubs, and ground cover shall be included in the Contract Lump Sum Contract Price. The cost of soil amendments, fertilizing and soil conditioning, weed control, and finish grading shall be included in the Lump Sum Contract Price.

Consultant Technical Specifications in C.S.I. format for items not identified in Technical Specifications Consultant “Greenbook” Amendments

END OF TECHNICAL PROVISIONS

SECTION 00 01 10

TABLE OF CONTENTS

DOCUMENT/SECTION No. – TITLE

DIVISION 00 – PROCURMENT AND CONTRACTING REQUIRMENTS (Page TP-71)

00 01 10 – TABLE OF CONTENTS
00 72 00 – GENERAL CONDITIONS 2007

DIVISION 1 – GENERAL REQUIREMENTS (Page TP-76)

01 11 00 – SUMMARY OF WORK
01 20 00 – PAYMENT PROCEDURES
01 23 00 – ALTERNATES
01 25 00 – SUBSTITUTION PROCEDURES W/ REQUEST FORM
01 26 00 – CONTRACT MODIFICATIONS PROCEDURES
01 30 00 – ADMINISTRATIVE REQUIREMENTS
01 31 10 – INFORMATION AND PROCEDURES INSTRUCTIONS (RFI)
01 32 00 – CONSTRUCTION SCHEDULE
01 35 15 – CAL-GREEN ENVIRONMENTAL REQUIREMENTS
01 40 00 – QUALITY REQUIREMENTS
01 50 00 – TEMPORARY FACILITIES AND CONTROLS
01 60 00 – PRODUCT REQUIREMENTS
01 70 00 – EXECUTION REQUIREMENTS
01 74 10 – WASTE MANAGEMENT
01 77 00 – CLOSEOUT PROCEDURES
01 78 00 – WARRANTIES
01 79 00 – DEMONSTRATION AND TRAINING

DIVISION 3 – CONCRETE (Page TP-144)

03 10 00 – CONCRETE FORMING AND ACCESSORIES
03 20 00 – CONCRETE REINFORCING
03 30 00 – CAST-IN-PLACE CONCRETE
03 35 15 – SEALED CONCRETE FLOORING

DIVISION 4 – MASONRY (Page TP-165)

04 22 00 – CONCRETE MASONRY UNITS
04 22 70 – WATERPROOF CONCRETE UNIT MASONRY

SECTION No. - TITLE

DIVISION 5 – METALS (Page TP-179)

05 12 00 – STRUCTURAL STEEL FRAMING
05 30 00 – METAL DECKING
05 31 00 – STEEL DECKING
05 40 00 – COLD FORMED METAL FRAMING
05 50 00 – METAL FABRICATION
05 51 00 – METAL STAIRS
05 70 00 – DECORATIVE METAL

DIVISION 6 – WOOD AND PLASTICS (Page TP-233)

06 10 50 – MISCELLANEOUS ROUGH CARPENTRY
06 18 00 – STRUCTURAL GLUED-LAMINATED TIMBER
06 20 00 – FINISH CARPENTRY
06 40 00 – ARCHITECTURAL WOODWORK

DIVISION 7 – THERMAL AND MOISTURE PROTECTION (Page TP-248)

07 13 00 – SHEET WATERPROOFING
07 14 10 – COLD FLUID APPLIED WATERPROOFING
07 16 00 – CEMENTITIOUS AND REACTIVE WATERPROOFING
07 21 00 – THERMAL INSULATION
07 26 00 – BELOW GRADE VAPOR RETARDER
07 28 00 – WEATHER BARRIER UNDERLAYMENT
07 41 15 – MANUFACTURERD BATTEN SEAM ROOFING
07 46 40 – FIBER CEMENT SIDING
07 53 10 – ELASTOMETRIC PVC MEMBRANE ROOFING
07 60 00 – FLASHING AND SHEET METAL
07 72 00 – ROOF HATCHES
07 90 00 – JOINT SEALANTS

DIVISION 8 – DOORS AND WINDOWS (Page TP-301)

08 11 10 – HOLLOW METAL DOORS AND FRAMES
08 11 20 – INTERIOR ALUMINUM FRAMES
08 14 00 – WOOD DOORS
08 31 00 – ACCESS DOORS AND PANELS
08 33 10 – OVERHEAD COILING GRILLES
08 44 10 – GLAZED WINDOW WALL ASSEMBLIES
08 51 10 – ALUMINUM WINDOWS

SECTION No. - TITLE **DATE**

08 71 00 – DOOR HARDWARE
08 71 15 – LOW ENERGY DOOR OPERATORS
08 80 00 – GLAZING
08 83 00 – FRAMELESS MIRRORS
08 91 00 – LOUVERS

DIVISION 9 – FINISHES (Page TP-391)

09 21 00 – GYPSUM BOARD ASSEMBLIES
09 24 00 – PORTLAND CEMENT PLASTER
09 30 00 – TILING
09 51 00 – ACOUSTICAL CEILINGS
09 65 10 – RESILIENT BASE
09 65 20 – RESILIENT PLANK FLOORING
09 65 20 – RESILIENT TILE FLOORING
09 67 55 – URETHANE FOOD PREPARATION FLOORING
09 68 10 – TILE CARPETING
09 90 00 – PAINTING AND COATING
09 96 70 – HIGH PERFORMANCE COATING

DIVISION 10 – SPECIALTIES (Page TP-450)

10 11 00 – VISUAL DISPLAY BOARDS
10 14 00 – SIGNAGE
10 21 20 – PHENOLIC TOILET COMPARTMENTS
10 22 00 – OPERABLE PARTITIONS
10 26 10 – STAINLESS STEEL CORNER GUARDS
10 28 00 – TOILET ACCESSORIES
10 44 00 – FIRE EXITINGUISHER CABINETS
10 51 00 – PHENOLIC LOCKERS

DIVISION 11 – EQUIPMENT (Page TP-485)

11 10 00 – MISCELLANEOUS EQUIPMENT
11 66 13 – EXERCISE EQUIPMENT

DIVISION 12 – FURNISHINGS (Page TP-492)

12 24 00 – MANUAL WINDOW SHADES
12 93 00 – SITE FURNISHINGS

SECTION No. - TITLE

DIVISION 13 – SPECIAL CONSTRUCTION (Page TP-499)

13 10 10 – POOL CONCRETE
13 10 11 – POOL SHOTCRETE
13 11 13 – POOL FINISHES AND WATERPROOFING
13 11 14 – POOL DECK EQUIPMENT
13 11 15 – POOL MECHANICAL EQUIPMENT
13 11 16 – POOL SYSTEMS START-UP
13 11 17 – POOL ELECTRICAL
13 31 23 – PRE-ENGINEERED FABRIC SHADE STRUCTURES
13 34 16 – PERMANENT GRANDSTANDS

DIVISION 14 – CONVEYING EQUIPMENT (Page TP-569)

14 10 10 – HYDRAULIC ELEVATORS

DIVISION 22 – PLUMBING (Page TP-579)

22 05 13 – COMMON MOTOR REQUIREMENTS FOR PLUMBING EQUIPMENT
22 05 16 – EXPANSION FITTING AND LOOPS FOR PLUMBING PIPING
22 05 29 – HANGERS AND SUPPORTS FOR PLUMBING PIPING AND EQUIPMENT
22 05 48 – VIBRATION AND SEISMIC CONTROLS FOR PLUMBING PIPING AND EQUIPMENT
22 05 53 – IDENTIFICATION FOR PLUMBING PIPING AND EQUIPMENT
22 07 00 – PLUMBING INSULATION
22 11 00 – FACILITY WATER DISTRIBUTION
22 13 00 – FACILITY SANITARY SEWERAGE
22 14 00 – FACILITY STORM DRAINAGE
22 16 00 – FACILITY NATURAL-GAS PIPING
22 34 00 – DOMESTIC WATER HEATERS
22 40 00 – PLUMBING FIXTURES

DIVISION 23 – HEATING, VENTILATING, AND AIR CONDITIONING, HVAC (Page TP-686)

23 05 00 – COMMON WORK RESULTS FOR HVAC
23 05 13 – COMMON MOTOR REQUIREMENTS FOR HVAC EQUIPMENT
23 05 29 – HANGERS AND SUPPORTS FOR HVAC PIPING AND EQUIPMENT
23 05 48 – VIBRATION AND SEISMIC CONTROLS FOR HVAC PIPING AND EQUIPMENT
23 05 53 – IDENTIFICATION FOR HVAC PIPING AND EQUIPMENT
23 05 93 – TESTING, ADJUSTING, AND BALANCING FOR HVAC
23 07 00 – HVAC INSULATION
23 08 00 – COMMISSIONING OF HVAC

SECTION No. - TITLE **DATE**

23 09 23 – DIRECT-DIGITAL CONTROL SYSTEM FOR HVAC
23 23 00 – REFRIGERANT PIPING
23 31 00 – HVAC DUCTS AND CASINGS
23 33 00 – AIR DUCT ACCESSORIES
23 34 00 – HVAC FANS
23 37 00 – AIR OUTLETS AND INLETS
23 40 00 – HVAC AIR CLEANING DEVICES
23 51 00 – BREECHINGS, CHIMNEYS, AND STACKS
23 74 13 – PACKAGED ROOFTOP AIR CONDITIONING UNITS
23 81 26 – SPLIT-SYSTEM AIR CONDITIONERS

DIVISION 26 – ELECTRICAL (Page TP-859)

26 05 00 – ELECTRICAL GENERAL PROVISIONS
26 05 01 – BASIC ELECTRICAL MATERIALS & METHODS
26 05 30 – CONDUIT AND WIRE
26 24 13 – SWITCHBOARDS
26 24 16 – PANELBOARDS AND TERMINAL CABINETS
26 24 19 – MOTOR CONTROL EQUIPMENT
26 50 05 – LIGHTING FIXTURES

DIVISION 28 – ELECTRONIC SAFETY AND SECURITY (Page TP-986)

28 46 20 – FIRE ALARM

DIVISION 32 – EXTERIOR IMPROVEMENTS (Page TP-1011)

32 93 44 – PALM TREE PLANTING

END OF DOCUMENT

SECTION 00 72 00

GENERAL CONDITIONS

1 GENERAL CONDITIONS

A. The General Conditions of the Contract for Construction, AIA Document A201, 2017 Edition, Articles 1 through 15 inclusive, is a part of this Contract, and is incorporated herein as fully as if here set forth.

1. A copy of the General Conditions may be obtained at www.aia.org under “Contract Documents”, bottom of page “Store”; by calling 800-242-3837 (option 4); or at www.aiasf.org under “Publications”.

END OF SECTION

SECTION 01 11 00

SUMMARY OF WORK

PART 1 - GENERAL

1.1 SUMMARY

A. Project consists of construction of ***New senior center and aquatics building with new pool and pool equipment building located at 1654 W 166th street, Gardena, CA 90247*** as indicated in Contract Documents.

1. Owner reserves right to remove and retain possession of existing items prior to start of Contract.

2. Removal of hazardous material shall be per separately provided hazardous material abatement report prepared by others. Architect shall not be involved in determination, removal or disposal of hazardous materials.

1.2 REQUIREMENTS INCLUDED

A. This section includes administrative provisions:

1. Work sequence.
2. Contractors use of premises.
3. Field engineering.
4. Regulatory requirements and reference standards.
5. Owner furnished Contractor installed products (OFCI).
6. Owner pre-ordered products.

1.3 WORK SEQUENCE

A. Coordinate construction schedule and operations with Owner and Architect.

B. Perform construction in phases as indicated.

1.4 CONTRACTORS USE OF PREMISES

A. Limit use of premises for Work and construction operations and to allow for work by other contractors.

B. Coordinate use of premises and access to site under direction of Owner and Architect.

1.5 FIELD ENGINEERING

A. Provide field engineering services; establish lines and levels by use of recognized engineering survey practices. See General Provision, 3-10, Survey for more details.

B. Locate and protect control and reference points.

1.6 REGULATORY REQUIREMENTS AND REFERENCE STANDARDS

A. Regulatory Requirements:

1. Architect has contacted governing authorities and reviewed design requirements of local, state and federal agencies for applicability to Project.

2. Contractor shall be responsible for contacting governing authorities directly for necessary information and decisions bearing upon performance of Work.

B. Reference Standards:

1. For Products specified by association or trade standards, comply with requirements of referenced standard, except when more rigid requirements are specified or are required by applicable codes.

2. Applicable date of each standard is that in effect as of date on proposal or date on Contract where no proposal is available, except when a specific date is specified.

1.7 OWNER FURNISHED CONTRACTOR INSTALLED PRODUCTS (OFCI

A. Select products are to be furnished and paid for by Owner and installed by Contractor:

1. Refer to Drawings and Specifications.

B. Owner's Responsibilities:

1. Arrange for and deliver shop drawings, product data, and samples to Contractor.
2. Arrange and pay for product delivery to site.
3. Inspect products jointly with Contractor on delivery.
4. Submit claims for transportation damage.
5. Arrange for replacement of damaged, defective, or missing items.
6. Arrange for manufacturer's warranties, inspections, and service.

C. Contractor's Responsibilities:

1. Review shop drawings, product data, and samples.
2. Receive and unload products at site.
3. Inspect jointly with Owner for completeness and damage.
4. Handle, store, and install products.
5. Finish products as required after installation.
6. Repair or replace items damaged by Work of this Contract.

1.8 OWNER PRE-ORDERED PRODUCTS

A. Select products have been pre-ordered by Owner:

1. Refer to Drawings.

B. Owner has negotiated purchase orders for these products for incorporation into Project.

1. Purchase orders are assigned to Contractor; costs shall be included into base bid.

2. Contractor's responsibilities are same as if Contractor negotiated purchase orders.

END OF SECTION

SECTION 01 20 00

PAYMENT PROCEDURES

PART 1 - GENERAL

1.1 SUMMARY

A. Section Includes: Special administrative and procedural requirements necessary to prepare and process Application for Payment. General Provisions, Section 7- Measurement and Payment to prevail over this section if any conflict.

1.2 SCHEDULE OF VALUE

A. Coordination: Coordinate preparation of Schedule of Values with preparation of Contractor's Construction Schedule.

1. Correlate line items in Schedule of Values with other required administrative forms and schedules, including application for Payment forms with Continuation Sheets, Submittals Schedule, and Contractor's Construction Schedule.

2. Submit Schedule of Values to Architect at earliest possible date but no later than seven days before date scheduled for submittal of initial Application for Payment.

B. Format and Content: Use Project Manual table of contents as guide to establish line items for Schedule of Values. Provide at least one line item for each Specification Section.

1. Identification: Include following Project identification on Schedule of Values.

a. Project name and location.
b. Name of Architect.
c. Architect's Project number.
d. Contractor's name and address.
e. Date of submittal.

2. Submit draft of AIA Document G703 Continuation Sheets.

3. Provide breakdown of Contract Sum in enough detail to facilitate continued evaluation of Application for Payment and progress reports. Coordinate with Project Manual table of contents.

a. Provide several line items for principal subcontract amounts where appropriate.

4. Round amounts to nearest whole dollar; total shall equal Contract Sum.

5. Provide separate line item in Schedule of Values for each part of Work where Applications for Payment may include materials or equipment purchased or fabricated and stored, but not yet installed.

6. Provide separate line items in Schedule of Value for initial cost of materials, for each subsequent stage of completion, and for total installed value of that part of Work.

7. Each item in Schedule of Values and Application for Payment shall be complete. Include total cost and proportionate share of general overhead and profit for each item.

    a. Temporary facilities and other major cost items that are not direct cost of actual work-in-place may be shown either as separate line items in Schedule of Values or distributed as general overhead expense at Contractor's option.

8. Schedule Updating: Update and resubmit Schedule of Values before next application for Payment when Change Orders or Construction Change Directives result in a change in Contract Sum.

1.3 APPLICATIONS FOR PAYMENT

A. Each Application for Payment shall be consistent with previous applications and payments as certified by Architect and paid for by Owner.

    1. Initial Application for Payment: Application for Payment at time of Completion, and final Application for Payment involve additional requirements.

B. Payment Application Times: Date for each progress payment is indicated in Agreement between Owner and Contractor. Period of construction Work covered by each Application for Payment is period indicated in Agreement.

C. Partial and Final Payment: See section 7-3.2 of the General Provisions.

D. Delivered Materials: See section 7-3.3 of the General Provisions.

E. Payment Application Forms: AIA Document G702 and AIA Document G703 Continuation Sheets as form for Application for Payment.

F. Application Preparation: Complete every entry on form. Execute by person authorized to sign legal documents on behalf of Contractor. Architect will return incomplete applications without action.

    1. Entries shall match data on Schedule of Values and Contractor's Construction Schedule. Use updated schedules if revisions were made.

    2. Include amounts of Change Orders and Construction Change Directives issued before last day of construction period covered by application.

G. Transmittal:

    1. Contractor shall provide e-transmittal of Application for Payment one week prior to Payment Request ("Draw") Meeting, for review of team members.

2. Contractor shall provide DocuSign signed copies of Application for Payment at Payment Request ("Draw") Meeting.

    a. Provide each copy with transmittal form listing attachments and recording appropriate information about application.

    b. Copies shall include waivers of lien and similar attachments if required.

H. Waivers of Mechanic's Lien: With each Application for Payment submit waivers of mechanic's lien from every entity who is lawfully entitled to file a mechanic's lien arising out of Contract and related to Work covered by payment.

1. Submit partial waivers on each item for amount requested in previous application, after deduction for retainage, on each item.

2. When an application shows completion of an item, submit final or full waivers.

3. Owner reserves right to designate which entities involved in Work must submit waivers.

4. Waiver Forms: Submit waivers of lien on forms executed in manner acceptable to Owner.

I. Initial Application for Payment: Administrative actions and submittals that must precede or coincide with submittal of first Application for Payment include the following.

1. List of subcontractors.

2. Schedule of Values.

3. Contractor's Construction Schedule (preliminary if not final).

4. Schedule of unit prices.

5. Submittals Schedule (preliminary if not final).

6. List of Contractor's staff assignments.

7. List of Contractor's principal consultants.

8. Copies of building permits.

9. Copies of authorizations and licenses from authorities having jurisdiction for performance of Work.

10. Initial progress report.

11. Report of preconstruction conference.

12. Certificates of insurance and insurance policies.

J. Final Payment Application: Submit final Application for Payment with releases and supporting documentation not previously submitted and accepted including but not necessarily limited to following.

1. Evidence of completion of Project closeout requirements.

2. Insurance certificates for products and completed operations where required and proof that taxes, fees, and similar obligations were paid.

3. Updated final statement accounting for final changes to Contract Sum.

4. AIA Document G706, Contractor's Affidavit of Payment of Debts and Claims.

5. AIA Document G706A, Contractor's Affidavit of Release of Liens.

6. AIA Document G707, Consent of Surety to Final Payment.

7. Evidence that claims have been settled.

8. Final meter readings for utilities, a measured record of stored fuel, and simliar data as of date of Completion.

9. Final liquidated damages settlement statement.

END OF SECTION

SECTION 01 23 00

ALTERNATES

PART 1 - GENERAL

1.1 SUMMARY

A. This section includes a description of alternate work.

B. Related Requirements:

1. Pricing Documents: Quotation of cost of each alternate.

2. Owner-Contractor Agreement: Alternates accepted by Owner for incorporation into the Work.

3. Sections of Specifications identified in each Alternate.

1.2 PROCEDURES

A. Alternates will be exercised at Owner's option.

B. Coordinate Related Work: and modify surrounding work as required to complete Work, including changes under each alternate, when acceptance is designated in Owner-Contractor Agreement.

1.3 ALTERNATES

A. Alternates: To be determined.

B. Alternate No. 1: Delete Custom Colors.

1. Work Included in Alternate: Include deduct cost for each line item requiring custom color where color is not indicated on Drawings or Finish Schedule.

2. Work Included in Contract Amount: Include custom color as directed by Architect where color is not indicated on Drawings or Finish Schedule.

3. Sections: List each Technical Section in Project Manual that indicates custom color where color is not indicated on Drawings or Finish Schedule. List to indicate amount in dollars to be saved if Architect selects manufacturer’s standard color.

C. Alternate No. 2:

1. Work Included in Alternate:

2. Work Included in Contract Price:

3. Refer to Section

4. Refer to Drawing No.

END OF SECTION

SECTION 01 25 00

SUBSTITUTION PROCEDURES

PART 1 - GENERAL

1.1 SUMMARY

A. General: Procedures are described for requesting substitution of unlisted materials in lieu of materials named in Specifications or approved for use in addenda.

1. Provide products listed in Contract Documents, products by manufacturers listed in Contract Documents, and products meeting specified requirements.

a. Contract Amount: Base on materials and products included in Contract Documents.

b. Where materials and products are listed in Contract Documents, materials and products by manufacturers not listed shall not be used without Owner's and Architect's approval of Contractor's written request for substitution.

2. Purpose: After bidding, substitutions will only be considered where Owner will receive benefit or because specified materials are no longer available due to no fault of Contractor.

3. Purpose: Substitutions will only be considered where Owner will receive benefit or because specified materials are no longer available due to conditions beyond Contractor control.

a. Owner benefits either from a Contractor proposed reduction of the Contract amount or from a reduction in Contract time based on acceptance of proposed substitution.

b. List proposed cost or time reductions on request for substitution.

c. Requests not including a proposed cost or time reduction will not be considered unless Contractor submits supporting information indicating specified materials are not available.

B. Related Sections:

1. Section 01 60 00: Product requirements.

1.2 SUBSTITUTIONS

A. Within a period of 35 days after award of Contract, Owner and Architect will consider formal requests for substitutions only from Contractor as specified in 1.1 Summary.

1. Owner and Architect will consider only one request for substitution for each material; where requests are denied Contractor shall be required to provide specified materials.

2. After initial 35-day period, requests will be considered only when a product becomes unavailable through no fault of Contractor; more than one request for substitution will be considered if necessary.

B. Prior to submittal of second Request for Payment Owner and Architect will consider formal requests for substitutions from Contractor as specified in 1.1 Summary.

1. Owner and Architect will consider only one request for substitution for each material; where requests are denied Contractor shall be required to provide specified materials.

2. After payments begin, requests will be considered only when a product becomes unavailable through no fault of Contractor; more than one request for substitution will be considered if necessary.

C. Submit each request with sequentially numbered “Substitution Request Transmittal” acceptable to Owner and Architect; submit separate request for each product and support each request with:

1. Product identification with manufacturer's literature and samples where applicable.

2. Name and address of similar projects on which product has been used, and date of installation.

D. Submit itemized comparison of proposed substitution with product specified and list significant variations.

E. Submit data relating to changes in construction schedule.

F. Note effect of substitution on other work, products, or separate contracts.

1. Note if acceptance of substitution could require revision of Contract Documents, Drawings, details or Specifications.

G. Include accurate cost data comparing proposed substitution with product and amount of net change in Contract price.

1. Include costs to other contractors and costs for revisions to Drawings, details or Specifications.

H. Substitutions will not be considered for acceptance when:

1. They are indicated or implied on submittals without a formal request from Contractor.

2. They are requested directly by a subcontractor or supplier.

3. Acceptance will require substantial revision of Contract Documents.

I. Substitute products shall not be ordered without written acceptance of Owner and Architect.

J. Owner and Architect will determine acceptability of proposed substitutions and reserves right to reject proposals due to insufficient information.

1.3 CONTRACTOR'S REPRESENTATION

A. Requests constitute a representation that Contractor:

1. Has investigated proposed product and determined it meets or exceeds, in all respects, specified product.

2. Will provide same warranty or longer warranty for substitution as for specified product.

3. Will coordinate installation and make other changes that may be required for Work to be complete in all respects.

4. Waives claims for additional costs that subsequently become apparent.

5. Will pay costs of changes to Contract Documents, Drawings, details and Specifications required by accepted substitutions.

1.4 ARCHITECT'S DUTIES

A. Review Contractor's requests for substitutions with reasonable promptness.

1. Architect will recommend that Owner accept or reject substitution request.

2. Upon request, Architect will provide cost for changes to Contract Documents, Drawings, details and Specifications required for substitutions.

B. Notify Contractor in writing of decision to accept or reject requested substitution.

CONTRACTOR'S SUBSTITUTION REQUEST

(Use separate form for each request)

Date: _____ Request No.: _____

TO: Architect _____ Date: _____

PROJECT: _____ Project No.: _____
CONTRACTOR _____

SPECIFIED ITEM: _____
Section: _____ Page: _____ Paragraph: _____ Description: _____
Drawing Number(s): _____ Detail Number(s): _____
The undersigned request consideration of the following:
PROPOSED SUBSTITUTION: _____

REASON FOR NOT GIVING PRIORITY TO SPECIFIED ITEMS: _____

SAVINGS or CREDIT to OWNER for ACCEPTING SUBSTITUTE: $ _____
PROJECT COMPLETION CHANGE for ACCEPTING SUBSTITUTE Days _____

Attached data includes description, specifications, drawings, photographs, performance and test data adequate for evaluation of the request; applicable portions of the data are clearly identified.

Attached data also includes a description of changes to the Contract Documents that the proposed substitution will require for its proper installation.

The undersigned certifies that the following paragraphs, unless modified by attachments, are correct:

1. Proposed substitution has been fully checked and coordinated with the Contract Documents.
2. The proposed substitution does not affect dimensions shown on Drawings.
3. The proposed substitution does not require revisions to mechanical or electrical work.
4. The undersigned will pay for changes to the building design, including architectural and engineering design, detailing, and construction costs caused by the requested substitution.
5. The proposed substitution will have no adverse effect on other trades, construction schedule, or warranty.
6. Maintenance and service parts will be locally available for the proposed substitution.
7. The proposed substitution will have no adverse effect on LEED credits (applies to LEED Projects ONLY)
8. The proposed substitution will have no adverse effect on Green Building Requirements where applicable.

The undersigned further states that the function, appearance, and quality of the proposed substitution are equivalent or superior to the specified item.

Attachments: The attached data is furnished herewith for evaluation of the proposed substitution.
☐ Catalog ☐ Drawings ☐ Samples ☐ Reports ☐ Tests ☐ Other: _____
Submitted by:

_____ _____
(Name of Authorized Representative) (Authorized Legal Signature)

_____ ( ) _____
(Firm) (Telephone)

For use by the Architect: ☐ Accepted ☐ Accepted as Noted ☐ Rejected: Submit Specified Item

BY: _____
(Authorized Signature)

Date: _____ Remarks: _____

END OF SECTION

SECTION 01 26 00

CONTRACT MODIFICATION PROCEDURES

PART 1 - GENERAL

1.1 SUMMARY

A. Section Includes: This section specifies administrative and procedural requirements governing Contract modification procedures.

1. Requests for Information (RFI).
2. Change Order.
3. Construction Change Directive.

B. Related Requirements:

1. Section 01 25 00: Substitution procedures.
2. Section 01 30 00: Administrative requirements.

1.2 MINOR CHANGES IN WORK

A. Architect will issue supplemental instructions authorizing minor changes in Work, not involving adjustment to Contract Sum or Contract Time, on AIA Form G710, Architect’s Supplemental Instructions or similar form.

1.3 REQUESTS FOR INFORMATION

A. Contractor may submit a written Request for Information (RFI) in format approved by Architect relating to perceived inconsistencies and omissions in Contract Documents.

1. A record of RFI's is to be maintained by Contractor along with information regarding origin of request, date of request, and date request was received from Architect. Number RFI's sequentially based on date of request.

B. Requests for Information shall be used only as a means of obtaining clarification of information not included in Contract Documents and shall not be used to assist Contractor in preparation of shop drawings or other information required by Contract.

1. Contract Documents are intended to contain enough information to show aesthetic and design intent and to provide information such that construction procedures (means and methods) may be reasonably inferred.

2. Contract Documents are not intended to provide specific information related to means and methods of construction nor are they intended to be exhaustive in content.

C. Contractor shall carefully review requests for information by subcontractors and suppliers to ascertain if information is in Contract Documents prior to submitting a Request for Information to Architect based on requests by others.

1. Contractor may suggest possible solutions to fit Project conditions where appropriate.

D. Architect reserves right to return RFI's that do not reasonably relate to necessary clarification of intent of Contract Documents and to charge Contractor for time and materials involved in answering RFI's where information is in Contract Documents.

1. RFI's shall not be used as a request for substitutions; refer to Section 01 25 00 – Substitution Procedures.

1.4 CHANGE ORDERS

A. Owner-Initiated Proposal Requests: Architect will issue detailed description of proposed changes in Work that require adjustment to Contract Sum or Contract Time. If necessary, description will include supplemental or revised Drawings and Specifications.

1. Proposal requests issued by Architect are for information only. Do not consider changer order proposal requests as instruction either to stop work in progress or to execute proposed change.

2. Within 10 days of receipt of a proposal request, submit estimate of cost necessary to execute change to Architect for Owner's review.

a. Include list of quantities of products required and unit costs, with total amount of purchases to be made. Where requested, furnish survey data to substantiate quantities.

b. Indicate applicable taxes, delivery charges, equipment rental and amounts of trade discounts.

c. Include a statement indicating effect of proposed change in Work will have on Contract Time.

B. Contractor-Initiated Proposals: When latent or unforeseen conditions require modifications to Contract, Contractor may propose changes by submitting a request for a change to Architect and Owner.

1. Include statement of reasons for change and effect of change on Work. Provide a complete description of proposed change. Indicate effect of proposed change on Contract Sum and Contract Time.

2. Include a list of quantities of products required and unit costs with total amount of purchases to be made. Where requested, furnish survey data to substantiate quantities.

3. Indicate applicable taxes, delivery charges, equipment rental and amounts of trade discounts.

4. Comply with requirements in Section 01 25 00 - Substitution Procedures if proposed change requires substitution of unspecified product or system for specified product or system.

C. Proposal Request Form: Use AIA Document G709 for Change Order Proposal Requests; other substitute formats shall be submitted to Owner and Architect for approval prior to use.

D. Change Order Procedures: Contractor shall be directed to proceed with Work upon Owner's approval of Proposal.

1. Architect will issue Change Order for signatures of Owner and Contractor on AIA Form G701 or similar form, including approved Change Order proposals for that time period.

2. Amounts of each Change Order shall be indicated in each Request for Payment including payment status for each individual Change Order.

1.5 ALLOWANCES

A. Allowance Adjustment: For Contract items bid based on allowance, submit Change Order Proposal on difference between actual purchase amount and allowance, based on work-in-place.

1. Include installation cost in purchase amount only where indicated as part of allowance.

2. When requested, prepare explanations and documentation to substantiate amounts claimed for work done based on allowances.

3. Submit substantiation of a change in Scope of work claimed in Change Orders related to allowances.

4. Owner reserves right to establish actual quantity of work-in-place by independent quantity survey, measure or count.

B. Submit claims for increase costs because of a change in scope or nature of allowance described in Contract Documents, whether for purchase order amount or Contractor's handling, labor, installation, overhead and profit.

1. Submit claims within 21 days of receipt of Change Order or Construction Change Directive authorizing work to proceed. Owner will reject claims submitted later than 21 days.

2. Do not include Contractor's or subcontractor's indirect expense in Change Order cost amount unless it is clearly shown that nature or extent of work has changed from what could have been foreseen from information in Contract Documents.

3. No change to Contractor's indirect expense is permitted for selection of higher or lower-priced materials or systems of same scope and nature as originally indicated.

1.6 CONSTRUCTION CHANGE DIRECTIVE

A. Construction Change Directive: When Owner and Contractor disagree on terms of Proposal Request, Architect may issue a Construction Change Directive per AIA Form G714 or similar form.

1. Construction Change Directive instructs Contractor to proceed with change in Work, for subsequent inclusion in Change Order.

2. Construction Change Directive contains a complete description of change in Work. It also designates method to be followed to determine change in Contract Sum or Contract Time.

B. Documentation: Maintain detailed records on a time and material basis of Work required by Construction Change Directive. Coordinate scheduling with Construction Manager to allow monitoring by Owner if desired.

1. After completion of change, submit itemized account and supporting data necessary to substantiate cost and time adjustments to Contract.

END OF SECTION

SECTION 01 30 00

ADMINISTRATIVE REQUIREMENTS

PART 1 - GENERAL

1.1 SUMMARY

A. This section describes general procedural requirements for ongoing submittals.

1. Schedule of values.
2. Product data and manufacturer’s literature.
3. Shop drawings.
4. Samples.
5. Manufacturers' certificates.
6. Excess materials and attic stock.
7. Design build (delegated design) procedures.
8. Deferred approval requirements.

B. Related Requirements:

1. Section 01 31 00: Project management and coordination.
2. Section 01 32 00: Construction Schedule – Network Analysis.
3. Section 01 40 00: Test reports, manufacturer's field reports, and mock-ups.
4. Section 01 70 00: Manufacturers’ instructions.
5. Section 01 77 00: Closeout requirements including Project Record Documents.
6. Section 01 78 00: Warranties.

1.2 GENERAL SUBMITTAL PROCEDURES

A. Submittals: Transmit each item using form approved by Architect; submit sample to Architect for approval prior to use.

1. Identify Project, Contractor, subcontractor, major supplier.

a. Attach sequential identification number for each new submittal.

b. Identify each resubmittal using original submittal number and sequential identification clearly indicating item is resubmitted.

2. Identify pertinent Drawing sheet and detail number, and Specification section number as appropriate.

3. Identify deviations from Contract Documents.

4. Provide space for Contractor and Architect review stamps.

5. Contractor: Review and stamp submittals from subcontractors prior to submitting to Architect.

a. Review submittals and indicate where conflicts occur with Contract Documents and with work of other subcontractors.

b. Return submittals that vary significantly from Contract Documents for correction and resubmittal prior to submitting to Architect.

c. Submittals that vary significantly from Contract Documents and that fail to indicate thorough Contractor review prior to submission to Architect will be returned without review.

d. Cursory review and stamping of subcontractor submittal by Contractor shall not be acceptable.

B. Initial Schedules: Submit initial progress schedule and schedule of value in duplicate within 15 working days after award of Contract.

1. After review by Owner and Architect revise and resubmit where required.

C. Comply with progress schedule for submittals related to Work progress. Coordinate submittal of related items.

D. After Architect review of submittal, revise and resubmit as required, identify changes made since previous submittal.

E. Distribute copies of reviewed submittals to concerned persons. Instruct recipients to promptly report any inability to comply.

1.3 TYPES OF SUBMITTALS

A. General: Project requires various types of submittals to maintain communications, minimize misunderstandings, avoid unnecessary conflicts, and to ensure complete documentation for Project Record Documents.

1. Maintain complete set of submittals including required revisions.

B. Construction Schedules: Submit construction progress schedules for Design Team and Owner review and to maintain entire team up-to-date on construction activities.

C. Schedule of Values: Submit Schedule of Values indicating division of Work, subcontractors to perform work, products being used, and values attributed to each to inform Design Team and Owner.

D. Action Submittals: Submittals relating to product data and manufacturer’s literature, shop drawings, and samples for Design Team review and comment; do not begin fabrication, delivery, or installation until Design Team review is complete.

E. Information Submittals: Submittals relating to certifications, qualifications, reports, including test reports, and instructions are for information; Design Team may choose to comment but action is not generally anticipated.

1. Manufacturer installation instructions and recommendations shall be considered information submittals.

F. Design/Build Submittals: Where portion of Work requires design by specialized professionals submit information necessary to ensure work complies with Contract Documents along with certifications signed by qualified professional.

1. Calculations: Do not submit calculations unless specifically required by Contract Documents; submit calculations required by applicable authorities directly to applicable authorities;

a. Submit certification by qualified professional indicating required calculations have been prepared and work conforms to Contract Documents and applicable codes and regulations.

G. Maintenance Materials Submittals: Compile maintenance information and materials during Work to ensure complete set of documents, maintenance manuals, and operation instructions.

H. Closeout Submittals: Compile closeout submittals, organize, and submit to Owner prior to or at time of Substantial Completion. Project will not be considered Substantially Complete until closeout submittals have been received by Owner.

I. Material Safety Data Sheets (MSDS): MSDS will only be reviewed by Architect when submitted to show compliance with LEED certification requirements.

1. Non-LEED submittals that include material safety data sheets will be returned for resubmittal.

1.4 SCHEDULE OF VALUES

A. Submit typed schedule on AIA Form G703 or another Owner and Architect pre-approved 8-1/2" by 11" paper format; Contractor's standard media-driven printout will be considered on request. Submit within 15 days after award of Contract.

B. Format: Table of Contents of this Project Manual, with modifications as pre-approved by Owner and Architect; identify each line item with number and title of major Specification sections.

C. Include in each line item a directly proportional amount of Contractor overhead and profit.

D. Revise schedule to list change orders for each Application for Payment.

1. Submit subschedule for each phase of Work.

1.5 PRODUCT DATA/MANUFACTURERS' LITERATURE

A. Action Submittals: Mark each copy to identify applicable Products, models, options, and other data; supplement manufacturers' standard data to provide information unique to the Work.

B. Information Submittals: Include manufacturers' installation instructions only when required by Specifications or specifically requested by Architect.

1. Maintain copy of manufacturer installation instructions and recommendations in Contractor's field office for review.

C. Product data shall be submitted as electronic PDF files unless otherwise noted or approved by Architect in advance.

1. Where paper copies are permitted submit number of copies Contractor requires, plus one copy to be retained by Architect.

D. Submit number of copies Contractor requires, plus one copy to be retained by Architect.

1.6 SHOP DRAWINGS

A. Shop drawings shall be submitted as electronic PDF files unless otherwise noted or approved by Architect in advance.

1. Where prints are permitted submit one reproducible print; minimum sheet size 8-1/2” by 11”.

B. Shop drawings shall be submitted in reproducible format acceptable to Architect and Owner; computerized PDF files will be acceptable unless otherwise directed.

1. Prints: Submit one reproducible print; minimum sheet size 8-1/2” by 11”.

2. Prints: Submit three reproducible prints; minimum sheet size 8-1/2" by 11".

C. Distribution: After review, reproduce and distribute.

1.7 SAMPLES

A. Submit full range of manufacturers' standard colors, textures, and patterns for Architect's selection.

B. Submit samples to illustrate functional characteristics of Product, with integral parts and attachment devices.

C. Coordinate submittal of different categories for interfacing work.

D. Include identification on each sample, giving full information.

E. Submit number of samples required by Contractor plus one to be retained by Architect.

1. Maintain one set of approved samples at Project Field Office.

F. Sizes: Provide following sizes unless otherwise specified.

1. Flat or Sheet Products: Minimum 6" square, maximum 12" by 12".
2. Linear Products: Minimum 6", maximum 12" long.
3. Bulk Products: Minimum one pint, maximum one gallon.

G. Full size samples may be used in the Work upon approval.

1.8 MANUFACTURERS' CERTIFICATES

A. Submit certificates, in duplicate in accordance with requirements of each Specification section.

1.9 EXCESS MATERIALS AND ATTIC STOCK

A. Excess Materials: Excess materials shall be considered property of Owner; inform Owner of extent of excess materials and methods required for handling and storage; remove from site excess materials not required by Owner for maintenance stock.

B. Attic Stock: Owner may choose to obtain additional attic stock for maintenance purposes where excess materials are not considered adequate.

1. Owner may require as much as 5% extra materials for maintenance purposes. Exact amount of each material shall be determined by Owner based on following meeting and additional costs determined by Contractor.

a. Contractor shall be prepared to order up to 5% extra materials on items that may not be readily available in future such as custom colors, off-shore manufacture, anticipated life span under 5 years, and potential for damage.

1) Do not order extra attic stock until extent is determined and agreed to by Owner including which materials require extra stock and exactly how much those materials will cost including shipping and handling.

b. Excess Materials: Furnish excess materials only for materials that have a shelf-life of more than three years.

2. Meeting: Conduct meeting prior to beginning Work to discuss extent of materials Owner would like to receive at Project Closeout for attic stock for maintenance materials; where available include personnel from Owner’s maintenance crew.

a. Estimate amount of excess materials to be anticipated to be ordered in addition to materials for handling and storage and how those materials will be invoiced and identified regarding material and location in Project.

b. Determine area necessary for adequate storage, handling, and identifying excess materials and attic stock and discuss with Owner.

c. Submit information regarding equipment necessary for handling of excess materials and attic stock due to weight, size, and storage requirements.

d. Assist Owner in determining where on-site or off-site additional attic stock for maintenance purposes will be delivered and stored.

3. Additional Costs: After meeting submit to Owner detailed listing of additional costs for each material Owner may like to receive for attic stock and assist Owner in modifying listing to determine acceptable final costs.

a. Include unit prices for desired attic stock where excess materials are not adequate for Owner maintenance stock.

4. Substantial Completion: Submit Construction Bulletin at Substantial Completion indicating changes to Contract Amount for attic stock including unit price totals for materials where excess materials are not adequate.

5. Final Completion: Ensure attic stock has been received, identified, cataloged, and stored at locations agreed upon with Owner based on Change Order indicating amounts finally agreed to by Owner.

1.10 DESIGN/BUILD PROCEDURES

A. Design as Part of Means and Methods of Construction: Select Project components require construction team design as part of means and methods of construction as described in various sections.

1. Terms commonly used such as Design/Build, Delegated Design, and Design/Assist are applicable to these procedures as determined by law but shall be generally referred to in these documents as Design/Build.

a. In general Design/Build includes design by licensed professionals with expertise beyond that allowed under standard architectural licensure, and outside of scope of work of other design professionals on the design team.

2. Contractor may be required to provide design services as part of construction for specific work defined as design or design-build where special expertise is required that is not available in the Project design team.

3. Subcontractors, fabricators, and manufacturers may be required to provide design services as part of their work due to special expertise in design services for their specific components, refer to technical sections for Design/Build.

4. Contractor, subcontractors, fabricators, manufacturers, and suppliers shall be responsible for attachments, anchors, fasteners, adhesives, and connectors suitable to applications unless specific items are listed in Contract Documents.

a. Where specific items are listed in Contract Documents Contractor, subcontractors, fabricators, manufacturers, and suppliers shall review and submit comments where items listed are not acceptable.

b. Where no comments are received, listed items shall be considered acceptable.

B. Contractor acknowledges and accepts responsibility for specialty design as part of means and methods of construction, as well as coordination of parties involved to achieve architectural design intent indicated in Contract Documents.

1. Design-build work includes sizing, sequencing, and detailing for construction by professional licensed or registered engineer or design professional with special expertise applicable to portion of Work involved.

2. Design-build work shall be constructed in compliance with building codes and regulations in effect and shall be fit and proper for intended use.

3. Design-build work shall include drawings, specifications, and calculations prepared, stamped, and signed by qualified professional licensed or registered engineer licensed in the Project location as appropriate to design-build work.

    a. Plans, specifications, and calculations shall be acceptable to Owner, Owner's Representative, and applicable authorities.

C. Where required by Owner Contractor shall submit copies of current insurance policies covering errors and omissions of persons designing design-build work with deductibles and limits per occurrence as mutually agreed by Owner and Contractor.

1. Provide endorsement to insurance providing for 30-day notice to Owner prior to cancellation or material reduction in coverage.

2. Insurance shall be maintained for not less than applicable statute of limitations for claims of latent defects, if such insurance is not written on an occurrence basis during time design-build work is designed and constructed.

D. Review proposed layouts with Design Team and with various trades prior to commencing work related to design-build work.

1.11 DEFERRED APPROVAL REQUIREMENTS

A. Installation of deferred approval items shall not be started until detailed plans, specifications, and engineering calculations have been accepted and signed by Architect or Engineer of Record responsible for Project design.

B. Deferred Approval Items shall be signed by California registered architect or professional engineer delegated responsibility covering specific work shown requiring approval from the agency having jurisdiction.

1. Deferred approval items for this Project include but may not be limited to following:

    a. **Section 08 44 10 Glazed Window Wall Assemblies**

    b. **Fire Protection system**

    c. **Fire Alarm**

2. Deferred approval drawings and specifications become part of the approved submittal documents for the Project when they are submitted to and approved by Division of the State Architect.

3. Submit four copies of calculations, product data and test reports.

4. Identify and specify supports, fasteners, spacing, penetrations, etc., for each deferred approval items, including calculations for each fastener.

5. Submit documents to Architect of Record for review.

6. Deferred submittal documents shall bear stamp and signature of architect or

engineer licensed in State of California and responsible for work shown on deferred submittal documents.

END OF SECTION

SECTION 01 31 10

INFORMATION AND PROCEDURES INSTRUCTIONS (RFI)

PART 1 – GENERAL

1.1 SUMMARY

A. This Section contains procedures to be followed by Contractor upon discovery of any apparent conflicts, omissions, or errors in Contract Documents or upon having any question concerning interpretation.

B. Alternate: At the Owners option, Utilize the standard forms, procedures, contracts and / or agreements, preferred by the owner, in lieu of the methods described herein.

1.2 PROCEDURES

A. Requests for clarification or additional information shall be submitted in writing to Architect using a Request for Information (RFI) form approved by Architect.

B. RFIs shall be numbered sequentially. RFI number shall be followed by a sequential numerical suffix as necessary for each resubmission. For example, first RFI would be 001. Second RFI would be 002 and first resubmittal of RFI 002 would be 002.1.

C. Each RFI shall be limited to ONE subject.

D. An RFI shall be submitted if one of following conditions occur:

1. Contractor discovers an unforeseen condition or circumstance that is not described in Contract Documents.

2. Contractor discovers an apparent conflict or discrepancy between portions of Contract Documents that appears to be inconsistent or is not reasonably inferred from intent of Contract Documents.

3. Contractor discovers what appears to be an omission from Contract Documents that cannot be reasonably inferred from intent of Contract Documents.

E. Contractor shall not:

1. Submit an RFI as a request for substitution.

2. Submit an RFI as a submittal.

3. Submit an RFI under pretense of a Contract Documents discrepancy or omission without thorough review of documents.

4. Submit an RFI in a manner that suggests specific portions of Contract

Documents are assumed to be excluded or by taking an isolated portion of Contract Documents in part rather than whole.

5. Submit an RFI in an untimely manner without proper coordination and scheduling of Work of related trades.

6. If Contractor submits an RFI contrary to any of above, Contractor shall pay cost of any review, which cost shall be deducted from Contract sum.

F. Submit a request for information or clarification immediately upon discovery. Submit RFI's within a time frame so as not to delay Contract schedule while allowing full response time described below.

1.3 RESPONSE TIME:

A. Architect, whose decision will be final and conclusive, shall resolve such questions and issue instructions to Contractor within a reasonable time frame. In most cases, RFI's will receive a response within 14 days. In some cases this time may need to be lengthened for complex issues, or shortened for emergency situations, as mutually agreed in writing.

B. Should Contractor proceed with Work affected before receipt of a response from Architect, within response time described above, any portion of Work which is not done in accordance with Architect's interpretations, clarifications, instructions, or decisions is subject to removal or replacement and Contractor shall be responsible for all resultant losses.

C. In event of failure to agree as to scope of Contract requirements, Contractor shall follow procedures set forth in General Conditions.

END OF SECTION

SECTION 01 32 00

CONSTRUCTION SCHEDULE - NETWORK ANALYSIS

PART 1 - GENERAL

1.1 SECTION INCLUDES

A. References.

B. Performance requirements.

C. Quality assurance.

D. Qualifications.

E. Project record documents.

F. Submittals.

G. Review and evaluation.

H. Format.

I. Cost and schedule reports.

J. Early work schedule.

K. Construction schedule.

L. Short interval schedule.

M. Requested time adjustment schedule.

N. Recovery schedule.

O. Updating schedules.

P. Distribution.

1.2 REFERENCES

A. Construction Planning and Scheduling Manual - A Manual for General Contractors and the Construction Industry, The Associated General Contractors of America (AGC).

B. CSI - Construction Specifications Institute Master Format 2004 Edition and updates.

C. National Weather Service - Local Climatological Data.

1.3 PERFORMANCE REQUIREMENTS

A. Ensure adequate scheduling during construction activities so work may be prosecuted in

an orderly and expeditious manner within stipulated Contract Time.

B. Ensure coordination of Contractor and subcontractors at all levels.

C. Ensure coordination of submittals, fabrication, delivery, erection, installation, and testing of materials and equipment.

D. Ensure on-time delivery of Owner furnished materials and equipment.

E. Ensure coordination of jurisdictional reviews.

F. Assist in preparation and evaluation of applications for payment.

G. Assist in monitoring progress of work.

H. Assist in evaluation of proposed changes to Contract Time.

I. Assist in evaluation of proposed changes to Construction Schedule.

J. Assist in detection of schedule delays and identification of corrective actions.

1.4 QUALITY ASSURANCE

A. Perform work in accordance with Construction Planning and Scheduling Manual published by the AGC.

B. Maintain one copy of document on site.

C. In the event of discrepancy between the AGC publication and this section, provisions of this section shall govern.

1.5 QUALIFICATIONS

A. Scheduler: Personnel or specialist consultant with 5 years minimum experience in scheduling construction work of a complexity and size comparable to this Project.

B. Administrative Personnel: 5 years minimum experience in using and monitoring schedules on comparable projects.

1.6 PROJECT RECORD DOCUMENTS

A. Submit record documents under provisions of Section 01 77 00.

B. Submit one reproducible and two copies of final Record Construction Schedule which reflects actual construction of this Project.

C. Record schedule shall be certified for compliance with actual way project was constructed.

D. Receipt of Record Construction Schedule shall be a condition precedent to any retainage release or final payment.

1.7 SUBMITTALS

A. Within 7 days from the Notice of Award submit proposed Early Work Schedule and preliminary Cost Report defining activities for first 60 days of Work.

B. Within 45 days from Notice of Award submit proposed Construction Schedule and final Cost Report.

C. Submit updated Construction Schedule at least 10 days prior to each Application for Payment.

D. Submit Short Interval Schedule at each Construction Progress Meeting.

E. Submit Time Adjustment Schedule within 10 days of commencement of a claimed delay.

F. Submit Recovery Schedules as required by completion of work.

G. Submit one reproducible and two copies of each schedule and cost report.

1.8 REVIEW AND EVALUATION

A. Early Work Schedule shall be reviewed during Preconstruction Conference with Owner and Architect.

B. Within 5 days of receipt of Owner and Architect's comments provide satisfactory revision to Early Work Schedule or adequate justification for activities in question.

C. Acceptance by Owner of corrected Early Work Schedule shall be a condition precedent to making any progress payments for first 60 days of Contract.

D. Cost loaded values of Early Work Schedule shall be basis for determining progress payments during first 60 days of Contract.

E. Participate in joint review of Construction Schedule and Reports with Owner and Architect.

F. Within 7 days of receipt of Owner and Architect's comments provide satisfactory revision to Construction Schedule or adequate justification for activities in question.

G. In the event that an activity or element of work is not detected by Owner or Architect review, such omission or error shall be corrected by next scheduled update and shall not affect Contract Time.

H. Acceptance by Owner of corrected Construction Schedule shall be a condition precedent to making any progress payments after first 60 days of Contract.

I. Cost-loaded values of Construction Schedule shall be basis for determining progress payments.

J. Review and acceptance by Owner and Architect of Early Work Schedule or Construction Schedule does not constitute responsibility whatsoever for accuracy or feasibility of schedules nor does such acceptance expressly or impliedly warrant, acknowledge or

admit reasonableness of activities, logic, duration, manpower, cost or equipment loading stated or implied on schedules.

1.9 FORMAT

A. Prepare diagrams and supporting mathematical analyses using Precedence Diagramming Method, under concepts and methods outlined in AGC Construction Planning and Scheduling Manual.

B. Listings: Reading from left to right, in ascending order for each activity.

C. Diagram Size: 42 inches maximum height x width required.

D. Scale and Spacing: To allow for legible notations and revisions.

E. Illustrate order and interdependence of activities and sequence of work.

F. Illustrate complete sequence of construction by activity.

G. Provide legend of symbols and abbreviations used.

1.10 COST AND SCHEDULE REPORTS

A. Activity Analysis: Tabulate each activity of network diagram and identify for each activity:

1. Description.
2. Interface with outside contractors or agencies.
3. Number.
4. Preceding and following number.
5. Duration.
6. Earliest start date.
7. Earliest finish date.
8. Actual start date.
9. Actual finish date.
10. Latest start date.
11. Latest finish date.
12. Total and free float.
13. Identification of critical path activity.
14. Monetary value keyed to Schedule of Values.

15. Manpower requirements.

16. Responsibility.

17. Percentage complete.

18. Variance positive or negative.

B. Cost Report: Tabulate each activity of network diagram and identify for each activity:

1. Description.

2. Number.

3. Total cost.

4. Percentage complete.

5. Value prior to current period.

6. Value this period.

7. Value to date.

C. Required Sorts: List activities in sorts or groups:

1. By activity number.

2. By amount of float time in order of early start.

3. By responsibility in order of earliest start date.

4. In order of latest start dates.

5. In order of latest finish dates.

6. Application for payment sorted by Schedule of Values.

7. Listing of activities on critical path.

8. Listing of basic input data which generates schedule.

1.11 EARLY WORK SCHEDULE

A. Shall establish scope of work to be performed during first 60 days of Contract.

B. Shall designate critical path or paths.

C. Shall contain the following phases and activities:

1. Procurement activities to include mobilization, shop drawings and sample submittals.

2. Identification of key and long-lead elements and realistic delivery dates.

3. Construction activities in units of whole days limited to 14 days for each activity except non-construction activities for procurement and delivery.

4. Approximate cost and duration of each activity.

D. Shall contain seasonal weather considerations. Seasonal rainfall shall be 10 year average for the month as evidenced by Local Climatological Data obtained from U.S. National Weather Service.

E. Activities shall be incorporated into Construction Schedule.

F. No application for payment will be evaluated or processed until Early Work Schedule has been submitted and reviewed.

G. Shall be updated on a monthly basis while Construction Schedule is being developed.

H. Failure to submit an adequate or accurate Early Work Schedule or failure to submit on established dates will be considered a substantial breach of Contract.

1.12 CONSTRUCTION SCHEDULE

A. Include Early Work Schedule as first 60 days of Construction Schedule.

B. Shall be a computer generated time scaled network diagram of activities.

C. Indicate a completion date for project that is no later than required completion date subject to any time extensions processed as part of a change order.

D. Conform to mandatory dates specified in the Contract Documents.

E. Should schedule indicate a completion date earlier than any required completion date, Owner or Architect shall not be liable for any costs should project be unable to be completed by such date.

F. Seasonal weather shall be considered in planning and scheduling of all work. Seasonal rainfall shall be 10 year average for the month as evidenced by Local Climatological Data obtained from U.S. National Weather Service.

G. Level of detail shall correspond to complexity of work involved.

H. Indicate procurement activities, delivery, and installation of Owner furnished material and equipment.

I. Designate critical path or paths.

J. Subcontractor work at all levels shall be included in schedule.

K. As developed shall show sequence and interdependence of activities required for complete performance of Work.

L. Shall be logical and show a coordinated plan of Work.

M. Show order of activities and major points of interface, including specific dates of completion.

N. Duration of activities shall be coordinated with subcontractors and suppliers and shall be best estimate of time required.

O. Shall show description, duration and float for each activity.

P. Failure to include any activity shall not be an excuse for completing all work by required completion date.

Q. No activity shall have a duration longer than 14 days or a value over $20,000.00 except non-construction activities for procurement and delivery.

R. An activity shall meet the following criteria:

1. Any portion or element of work, action, or reaction that is precisely described, readily identifiable, and is a function of a logical sequential process.

2. Descriptions shall be clear and concise. Beginning and end shall be readily verifiable. Starts and finishes shall be scheduled by logical restraints.

3. Responsibility shall be identified with a single performing entity.

4. Additional codes shall identify building, floor, bid item and CSI classification.

5. Assigned dollar value (cost-loading) of each activity shall cumulatively equal total contract amount. Mobilization, bond and insurance costs shall be separate. General requirement costs, overhead, profit, shall be prorated throughout all activities. Activity costs shall correlate with Schedule of Values.

6. Each activity shall have manpower-loading assigned.

7. Major construction equipment shall be assigned to each activity.

8. Activities labeled start, continue or completion are not allowed.

S. For major equipment and materials show a sequence of activities including:

1. Preparation of shop drawings and sample submissions.

2. Review of shop drawings and samples.

3. Finish and color selection.

4. Fabrication and delivery.

5. Erection or installation.

6. Testing.

T. Include a minimum of 15 days prior to completion date for punch lists and clean up. No other activities shall be scheduled during this period.

1.13 SHORT INTERVAL SCHEDULE

A. Shall be fully developed horizontal bar-chart-type schedule directly derived from Construction Schedule.

B. Prepare schedule on sheet of sufficient width to clearly show data.

C. Provide continuous heavy vertical line identifying first day of week.

D. Provide continuous subordinate vertical line identifying each day of week.

E. Identify activities by same activity number and description as Construction Schedule.

F. Show each activity in proper sequence.

G. Indicate graphically sequences necessary for related activities.

H. Indicate activities completed or in progress for previous 2 week period.

I. Indicate activities scheduled for succeeding 2 week period.

J. Further detail may be added if necessary to monitor schedule.

1.14 REQUESTED TIME ADJUSTMENT SCHEDULE

A. Updated Construction Schedule shall not show a completion date later than the Contract Time, subject to any time extensions processed as part of a Change Order.

B. If an extension of time is requested, a separate schedule entitled "Requested Time Adjustment Schedule" shall be submitted to Owner and Architect.

C. Indicate requested adjustments in Contract Time which are due to changes or delays in completion of work.

D. Extension request shall include forecast of project completion date and actual achievement of any dates listed in Agreement.

E. To the extent that any requests are pending at time of any Construction Schedule update, Time Adjustment Schedule shall also be updated.

F. Schedule shall be a time-scaled network analysis.

G. Accompany schedule with formal written time extension request and detailed impact analysis justifying extension.

H. Time impact analysis shall demonstrate time impact based upon date of delay, and status of construction at that time and event time computation of all affected activities. Event times shall be those as shown in latest Construction Schedule.

I. Activity delays shall not automatically constitute an extension of Contract Time.

J. Failure of subcontractors shall not be justification for an extension of time.

K. Float is not for the exclusive use or benefit of any single party. Float time shall be apportioned according to needs of project.

L. Float suppression techniques such as preferential sequencing, special lead/lag logic restraints, extended activity durations, or imposed dates shall be apportioned according to benefit of project.

M. Extensions will be granted only to extent that time adjustments to activities exceed total positive float of the critical path and extends Contract completion date.

N. Owner shall not have an obligation to consider any time extension request unless requirements of Contract Documents, and specifically, but not limited to these requirements are complied with.

O. Owner shall not be responsible or liable for any construction acceleration due to failure of Owner to grant time extensions under Contract Documents should requested adjustments in Contract Time not substantially comply with submission and justification requirements of Contract for time extension requests.

P. In the event a Requested Time Adjustment Schedule and Time Impact Analysis are not submitted within 10 days after commencement of a delay it is mutually agreed that delay does not require a Contract time extension.

1.15 RECOVERY SCHEDULE

A. When activities are behind Construction Schedule a supplementary Recovery Schedule shall be submitted.

B. Form and detail shall be sufficient to explain and display how activities will be rescheduled to regain compliance with Construction Schedule.

C. Maximum duration shall be one month and shall coincide with payment period.

D. Ten days prior to expiration of Recovery Schedule verification to determine if activities have regained compliance with Construction Schedule will be made. Based upon this verification the following will occur:

1. Supplemental Recovery Schedule will be submitted to address subsequent payment period.

2. Construction Schedule will be resumed.

1.16 UPDATING SCHEDULES

A. Review and update schedule at least 10 days prior to submitting an Application for Payment.

B. Maintain schedule to record actual prosecution and progress.

C. Approved change orders which affect schedule shall be identified as separate new activities.

D. Change orders of less than $20,000.00 value or less than 3 days duration need not be shown unless critical path is affected.

E. No other revisions shall be made to schedule unless authorized by Owner.

F. Provide narrative Progress Report at time of schedule update which details the following:

1. Activities or portions of activities completed during previous reporting period.

2. Actual start dates for activities currently in progress.

3. Deviations from critical path in days ahead or behind.

4. List of major construction equipment used during reporting period and any equipment idle.

5. Number of personnel by craft engaged on Work during reporting period.

6. Progress analysis describing problem areas.

7. Current and anticipated delay factors and their impact.

8. Proposed corrective actions and logic revisions for Recovery Schedule.

9. Proposed modifications, additions, deletions and changes in logic of Construction Schedule.

G. Schedule update will form basis upon which progress payments will be made.

H. Owner will not be obligated to review or process Application for Payment until schedule and Progress Report have been submitted.

1.17 DISTRIBUTION

A. Following joint review and acceptance of updated schedules distribute copies to Owner, Architect, and all other concerned parties.

B. Instruct recipients to promptly report in writing any problem anticipated by projections shown in schedule.

END OF SECTION

SECTION 01 35 15

CALGREEN ENVIRONMENTAL REQUIREMENTS

PART 1 - GENERAL

1.1 SUMMARY

A. Section Includes: Comply with CALGreen environmental requirements related to energy efficiency, water efficiency and conservation, material conservation and resource efficiency, and environmental quality.

1. Comply with specific CALGreen requirements as adopted by authorities having jurisdiction and applicable to Project.

1.2 ENVIRONMENTAL REQUIREMENTS

A. Mandatory Measures: Comply with CALGreen Mandatory Measures applicable to Project.

1. Design team and construction team are each required to participate to maximum degree possible to achieve CALGreen environmental requirements.

2. Contract Documents are not intended to limit alternative means of achieving environmental requirements.

a. Suggestions from Contractor, subcontractors, suppliers, and manufacturers for achieving environmental requirements are encouraged; team approach is also encouraged.

3. Voluntary Tiers: Verify extent of Voluntary Tiers applicability to Project.

a. Construction team is encouraged to work with Owner and Design Team to incorporate additional measures as defined in CALGreen Appendixes.

b. Contact Owner and Architect regarding extent of intent of Project to reach Voluntary Tiers, additional work necessary to achieve enhanced Voluntary Tiers, and potential costs involved in achieving each Voluntary Tier.

c. Construction team is required to achieve Mandatory Measures and Voluntary Tiers as applicable, and to achieve as much as possible without unacceptable cost impact or schedule impact as determined by Owner.

B. Requirements: Construction team is required to review CALGreen requirements relative to Project related to following.

1. Energy Efficiency: Comply with California Energy Commission requirements.

2. Water Efficiency and Conservation: Comply with requirements for both indoor and outdoor water use.

3. Material Conservation and Resource Efficiency:

a. Nonresidential Projects: Provide weather-resistant exterior wall and foundation envelope including prevention of landscape irrigation spray on structures (if any) and prevent water intrusion at exterior entries.

b. Provide construction waste management plan as defined by CALGreen with demolition and construction waste diverted from landfill by recycling or salvage for reuse.

c. Nonresidential Projects Building Maintenance and Operation: Provide for commissioning requirements as required by CALGreen including but not limited to testing, documentation and training, testing and adjusting.

4. Nonresidential Projects Environmental Quality: Comply with following as adopted by authorities having jurisdiction and as applicable to Project.

a. Fireplaces: Comply with requirement for fireplaces (if any) to be direct-vent sealed-combustion gas type or sealed wood-burning fireplace, woodstove, or pellet stove.

b. Mechanical Equipment Pollution Control: Cover duct and related air distribution component openings to prevent dust and debris accumulation.

c. Finish Material Pollution Control: Comply with CALGreen requirements for volatile organic compound (VOC) emissions including but not necessarily limited to following (as applicable):

1) Adhesives, sealants and caulks.
2) Paints and coatings.
3) Carpet systems including carpet, carpet cushion, and adhesives.
4) Resilient flooring systems.
5) Composite wood products formaldehyde limitations.

d. Filters: Comply with requirements for mechanically ventilated buildings to have air filtration media for outside and return air prior to occupancy.

e. Environmental Tobacco Smoke (ETS) Control: Comply with CALGreen requirements for ETS.

f. Interior Moisture Control: Comply with California Building Code requirements and CALGreen requirements for vapor retarder at concrete slab foundations and capillary break (aggregate base).

g. Building Material Moisture Content: Do not use water damaged building materials, remove and place wet and high moisture content insulation, and do not enclose wall or floor framing when moisture content exceeds 19%.

h. Indoor Air Quality: Comply with CALGreen requirements for outside air delivery and carbon dioxide monitoring.

i. Environmental Comfort: Comply with CALGreen requirements for whole acoustical control and interior sound control.

j. Outdoor Air Quality: Comply with CALGreen requirements for reduction of greenhouse gases and ozone depletion.

C. Planning and Design: Construction team shall coordinate with Design Team regarding Project Planning and Design methods related to CALGreen requirements related to Project design and shall comply with requirements related to construction.

1.3 QUALITY ASSURANCE

A. Project Management and Coordination: Contractor to identify one person on Contractor's staff to be responsible for CALGreen issues compliance and coordination.

1. Experience: Environmental project manager to have experience relating to CALGreen building construction.

2. Responsibilities: Carefully review Contract Documents for CALGreen issues, coordinate work of trades, subcontractors, and suppliers; instruct workers relating to environmental issues; and oversee Project Environmental Goals.

a. Submittals: Collect, compile, verify, and maintain sufficient information for submittals indicating compliance with applicable CALGreen requirements.

3. Meetings: Discuss CALGreen Goals at following meetings.

a. Pre-construction meeting.
b. Pre-installation meetings.
c. Regularly scheduled job-site meetings.

B. CALGreen Issues Criteria: Comply with requirements listed in CALGreen and various Specification sections.

PART 2 - PRODUCTS

2.1 MATERIALS

A. General Issues: Do not use materials with moisture stains or with signs of mold or mildew.

1. Moisture Stains: Materials that have evidence of moisture damage, including stains, are not acceptable, including both stored and installed materials; immediately remove from site.

2. Mold and Mildew: Materials that have evidence of growth of molds or of mildew are not acceptable, including both stored and installed materials; immediately remove from site.

2.2 SUBSTITUTIONS

A. Substitutions Environmental Issues: Requests for substitutions shall comply with requirements specified in Section 01 25 00 – Substitution Procedures, with following additional information required where environmental issues are involved.

1. Indicate each proposed substitution complies with CALGreen requirements.

2. Owner and Architect reserve right to reject proposed substitutions where CALGreen information is not provided and where substitution may impact mandatory requirements or Project voluntary tier requirements.

PART 3 - EXECUTION

3.1 PROTECTION

A. Environmental Issues: Protect interior materials from water damage; where interior products not intended for wet applications are exposed to moisture, immediately remove from site.

1. Protect installed products using methods that do not support growth of molds and mildews. Immediately remove from site materials with mold and materials with mildew.

END OF SECTION

SECTION 01 40 00

QUALITY REQUIREMENTS

PART 1 - GENERAL

1.1 SUMMARY

A. This section describes general quality control requirements.

1. General quality control.
2. Manufacturers' field services.
3. Mock-ups.
4. Independent testing laboratory services and inspections.

B. Related Requirements:

1. Refer to applicable codes and Specifications sections for test requirements.

1.2 QUALITY CONTROL, GENERAL

A. Maintain quality control over suppliers, manufacturers, products, services, site conditions, and workmanship, to produce work of specified quality.

1.3 MANUFACTURER'S FIELD SERVICES

A. When specified in respective Specification sections, require manufacturer or supplier to have qualified personnel provide on-site observations and recommendations.

1. Observe field conditions, including conditions of surfaces and installation.
2. Observe quality of workmanship.
3. Provide recommendations to assure acceptable installation and workmanship.
4. Where required, start, test, and adjust equipment as applicable.

B. Representative shall submit written report to Architect or Owner listing observations and recommendations.

1.4 TESTING LABORATORY SERVICES AND INSPECTIONS

A. Testing laboratory services and inspections specified and required by applicable codes and regulations will be performed by firms independent of firms related to construction operations and shall be acceptable to applicable authorities.

1. Notify Owner immediately where potential conflict of interest may be involved with testing laboratories or inspection services for Project.

2. Owner or Architect may also require independent testing of items where doubts exist that product or system does not conform to Contract Documents.

3. Owner will employ and pay for testing laboratory and special inspectors to provide Project specific testing and inspections under applicable codes and Specification sections except where indicated otherwise.

a. Owner employment of testing laboratory and inspectors shall not relieve Contractor of obligation to perform Work in accordance with requirements of applicable codes and Contract Documents.

1) Laboratory and inspectors may not release, revoke, alter, or enlarge on requirements of Contract Documents.

b. Retesting required because of non-conformance to specified requirements shall be performed by Owner's testing laboratory.

1) Payment for retesting shall be charged to Contractor by deducting inspection and testing charges from Contract amount.

c. Owner provided testing shall be limited to Project specific testing and shall not include general tests or approvals of materials, equipment or systems.

d. Owner provided inspections shall be limited to Project design team inspections and special inspectors required by applicable authorities.

B. Services shall be performed in accordance with requirements of governing authorities and with specified standards.

C. Reports will be submitted to Architect in duplicate giving observations and results of tests and inspections, indicating compliance or non-compliance with specified standards and with Contract Documents.

1. Where required, testing laboratory and inspectors will submit copy of tests and inspections directly to enforcing agency.

D. Contractor shall cooperate with testing laboratory and inspection personnel; furnish tools, samples of materials, design mix, equipment, storage and assistance as requested.

1. Notify Owner, Architect, inspectors, and testing laboratory sufficiently in advance of expected time for operations requiring inspection and testing services.

END OF SECTION

SECTION 01 50 00

TEMPORARY FACILITIES AND CONTROLS

PART 1 - GENERAL

1.1 SUMMARY

A. This section describes temporary construction facilities and temporary controls.

1. Electricity and lighting.
2. Heat and ventilation.
3. Water and sanitary facilities.
4. Construction aids.
5. Temporary enclosures.
6. Barriers.
7. Cleaning during construction.
8. Project identification.
9. Field offices.
10. Cellular telephone service.
11. Storage.

B. Related Requirements:

1. Section 01 70 00: Progress cleaning and final cleaning.
2. Section 01 74 10: Waste management.

C. Provide temporary construction facilities and temporary controls as required to conform to applicable authorities and as required to complete Project in accordance with Contract Documents.

1. Authorities: Contact governing authorities to establish extent of temporary facilities and temporary controls required by authorities.

1.2 ELECTRICITY AND LIGHTING

A. Provide electrical service required for construction operations, with branch wiring and distribution boxes located to allow service and lighting by means of construction-type power cords.

1. Connection to existing electrical service is permitted.

B. Provide lighting for construction operations.

1. Permanent lighting may be used during construction; maintain lighting and make routine repairs.

C. Owner will pay costs of energy used from existing on-site services.

1.3 HEAT AND VENTILATION

A. Provide heat and ventilation as required to maintain specified conditions for construction operation, to protect materials and finishes from damage due to temperature and humidity.

B. Owner will pay costs of energy used from existing on-site services.

1.4 WATER AND SANITARY FACILITIES

A. Provide water service required for construction operations; extend branch piping with outlets located so water is available by use of hoses.

1. Connection to existing facilities is permitted.

2. Owner will pay for water used from existing on-site services.

B. Provide and maintain required sanitary facilities and enclosures.

1.5 CONSTRUCTION AIDS

A. Noise, Dust and Pollution Control: Provide materials and equipment necessary to comply with local requirements for noise, dust and pollution control.

B. Fire Protection: Maintain on-site fire protection facilities as required by applicable authorities and insurance requirements.

C. Security: Protect Site and Work; prevent unauthorized entry, vandalism, and theft.

1. Coordinate with Owner’s security program.

D. Dewatering: Provide and operate drainage and pumping equipment; maintain excavations and site free of standing water.

1.6 ENCLOSURES

A. Temporary Closures: Provide temporary weather-tight closures for exterior openings for acceptable working conditions, for protection for materials, to protect interior materials from dampness, for temporary heating, and to prevent unauthorized entry.

1. Provide doors with self-closing hardware and locks.

B. Temporary Partitions: Provide temporary partitions as required to separate work areas from completed areas, to prevent penetration of dust and moisture into completed areas, and to prevent damage to finished areas and installed equipment.

1. Construction: Framing and sheet materials with closed joints and sealed edges at intersections with existing surfaces; Flame Spread Rating of 25 in accordance with ASTM E84.

1.7 BARRIERS

A. Barriers: Provide barriers as required to prevent public entry to construction areas and to protect adjacent properties from damage from construction operations.

1. Fence: Provide minimum 8-foot high commercial grade chain link or painted solid wood fence around construction site; equip with gates with locks.

2. Covered Walkways: Provide lighted covered painted walkways as required by governing authorities for public rights-of-way and for public access to existing building.

B. Barricades: Provide barricades as required by governing authorities.

C. Tree Protection: Provide barriers around trees and plants designated to remain; protect against vehicular traffic, stored materials, dumping, chemically injurious materials, and puddling or continuous running water.

1.8 CLEANING DURING CONSTRUCTION

A. Control accumulation of waste materials and rubbish; recycle or dispose of off-site.

B. Clean interior areas prior to start of finish work, maintain areas free of dust and other contaminants during finishing operations.

1.9 PROJECT IDENTIFICATION

A. Project Sign: Provide minimum 32-square foot Project identification sign of wood frame and exterior grade plywood construction, painted, with computer generated graphics by professional sign maker.

1. Design: As furnished by Architect.

2. Submit to Owner and Architect additional names or changes proposed to Project sign for prior written approval.

3. Erect on site at location established by Architect.

B. Other Signs: Subject to approval of Architect and Owner.

1.10 FIELD OFFICES

A. Field Office: See section 8-2 of the General Provisions.

1.11 CELLULAR TELEPHONE SERVICE

A. Cellular Telephone Service: Furnish on-site Project Managers with cellular telephone. Ensure Owner and Architect ability to contact site during construction operations.

1. Schedules: Submit schedules of on-site Project Managers with individual cellular telephone numbers to Owner and Architect; maintain schedules and cell phone numbers up to date during Project on-site operations.

1.12 STORAGE

A. Storage for Tools, Materials, and Equipment: Limit on-site storage to Project area; provide weather-tight storage, with heat and ventilation for products requiring controlled conditions.

1. Maintain adequate space for organized storage and access.

2. Provide lighting for inspection of stored materials.

1.13 REMOVAL

A. Remove temporary materials, equipment, services, and construction prior to Substantial Completion Inspection.

B. Clean and repair damage caused by installation or use of temporary facilities.

C. Restore existing facilities used during construction to specified or original condition.

END OF SECTION

SECTION 01 60 00

PRODUCT REQUIREMENTS

PART 1 - GENERAL

1.1 SUMMARY

A. This section describes basic product requirements governing material and equipment.

1. General product requirements.
2. Product list.
3. Quality assurance.
4. Delivery, storage, and handling.

B. Related Requirements:

1. Section 01 25 00: Substitution procedures.
2. Section 01 30 00: Submittal of manufacturers' certificates.
3. Section 01 77 00: Operation and maintenance data.

1.2 GENERAL PRODUCTS REQUIREMENTS

A. Products include material, equipment, and systems.

B. Comply with Specifications, referenced standards, and applicable codes and regulations as minimum requirements.

C. Provide new materials except as specifically allowed by Contract Documents.

D. Materials to be supplied in quantity within a Specification section shall be by one manufacturer, shall be the same, and shall be interchangeable.

E. Provide equipment and systems composed of materials from a single manufacturer except where otherwise recommended by equipment or systems manufacturer or where otherwise indicated in Contract Documents.

F. Contractor’s Options: Comply with following options; requests for substitutions for named manufacturers and products shall comply with requirements specified in Section 01 25 00 – Substitution Procedures.

1. Products Identified by Reference Standards: Select product meeting referenced standard for products specified only by reference standard.

a. Requests for Substitutions to be limited to products not complying with referenced standards.

1) Submit justification for non-compliance with reference standards as part of Request for Substitutions; if product is foreign made submit rationale why foreign standards and basic materials indicates compliance.

2. Named Manufacturers: Where names of manufacturers are specified select any named manufacturer product meeting Specifications for products specified by naming one or more manufacturers.

    a. Submit Request for Substitution for any manufacturer not named.

3. Named Manufacturers and Named Products: Select any named manufacturer named product meeting Specifications for products specified by naming one or more manufacturers and products.

    a. Where only one manufacturer and product is named together with additional manufacturers without specific products, Requests for Substitutions to be limited to products not comparable to that specified.

        1) Contractors, subcontractors, suppliers, and manufacturers shall take special care to ensure comparable products are being supplied based on design, performance, quality, and longevity.

        2) Substitutions: Submit Request for Substitution for any manufacturer not named and for products not comparable to those specified in design, performance, quality, and longevity.

4. Basis of Design: Where manufacturer or manufacturer and product both are indicated as Basis of Design, submit Request for Substitution for other manufacturers and products.

5. “Or Equal” Clauses: Submit request for substitution for manufacturer or product not specifically named in Specifications where terms "or equal", "or approved equal", or similar references are made.

G. Nameplates: Do not attach or imprint manufacturer or producer nameplates on exposed surfaces in occupied spaces except for required labels and operating data.

1. Equipment Nameplates: Provide permanent nameplate on service connected and power operated equipment located on easily accessible surface inconspicuous in occupied spaces.

    a. Provide name of product and manufacturer, model and serial number, capacity, speed, rating, and similar information.

1.3 SUBMITTALS

A. Product List: Within 35 days after award of Contract, submit to Owner and Architect a complete list of major products proposed for installation, with name of manufacturer, trade name, and model.

B. Product List: Prior to submittal of second Request for Payment, submit to Architect complete list of major products which are proposed for installation, with name of manufacturer, trade name, and model.

1. Tabulate products by Specification number and title.

C. Substitutions: Refer to Section 01 25 00 – Substitution Procedures.

1.4 QUALITY ASSURANCE

A. Comply with industry standards and applicable codes except when more restrictive tolerances or requirements indicate more rigid standards or precise workmanship.

B. Perform work by persons qualified to produce workmanship of specified quality.

C. Install products straight, true-to-line, and in correct relationship to adjacent materials, with hairline joints, free of rough, sharp and potentially hazardous edges.

D. Secure products in place with positive anchorage devices designed and sized to withstand stresses, vibration, and racking.

1. Seismic Anchors: Conform to code requirements.

1.5 DELIVERY, STORAGE, AND HANDLING

A. Transport products by methods to avoid product damage, deliver in undamaged condition in manufacturer's unopened containers or packaging.

B. Store products in accordance with manufacturer's instructions, with seals and labels intact and legible.

C. Store sensitive products in weather-tight enclosures; maintain within temperature and humidity ranges required by manufacturer's instructions.

D. For exterior storage of fabricated products, place on sloped supports above ground.

E. Store loose granular materials on solid surfaces in a well-drained area; prevent mixing with foreign matter.

F. Arrange storage to provide access for inspection; periodically inspect to assure products are undamaged and are maintained under required conditions.

G. Provide equipment and personnel to handle products by methods to prevent soiling and prevent damage.

H. Promptly inspect shipments to assure products comply with requirements, quantities are correct, and products are undamaged.

I. Immediately remove from Project products damaged, wet, stained, and products with mold and products with mildew.

1. Take special care to prevent absorbent products such as gypsum board and acoustical ceiling units from becoming wet.

END OF SECTION

SECTION 01 70 00

EXECUTION REQUIREMENTS

PART 1 - GENERAL

1.1 SUMMARY

A. This section describes execution requirements.

1. Installer qualifications.
2. Examination.
3. Manufacturer's instructions.
4. Installation.
5. Cleaning.
6. Protection.

B. Related Requirements:

1. Section 01 50 00: Cleaning during construction.
2. Section 01 77 00: Closeout procedures.
3. Section 01 79 00: Demonstration and training.

1.2 INSTALLER QUALIFICATIONS

A. Experienced Installers: Installers to have minimum five-years successful experience installing items like those required for Project, except for individuals in training under direct supervision of experienced installer.

1.3 EXAMINATION

A. Acceptance of Conditions: Beginning installation of a product signifies installer has examined substrates, areas, and conditions for compliance with manufacturer requirements for tolerances and other conditions affecting performance.

B. Field Measurements: Take field measurements as required to fit Work properly; recheck measurements prior to installing each product.

1. Where portions of Work are to fit to other construction verify dimensions of other construction by field measurements before fabrication; allow for cutting and patching to avoid delaying Work.

C. Space Requirements: Verify space requirements and dimensions of items shown diagrammatically on Drawings.

1.4 MANUFACTURERS' INSTRUCTIONS

A. Manufacturer’s Recommendations: When work is specified to comply with manufacturers' recommendations or instructions, distribute copies to persons involved and maintain one set in field office.

1. Conform to requirements specified in Section 01 30 00 for submittal of recommendations or instructions to Architect; submit to Architect only where specified or where specifically requested; otherwise keep in Field Office.

B. Perform work in accordance with details of recommendations and instructions and specified requirements.

1. Should a conflict exist between Specifications and recommendations or instructions consult with Architect.

C. Where manufacturer's information notes special recommendations in addition to installation instructions, comply with both recommendations and instructions.

1.5 INSTALLATION

A. Pre-Installation Meetings: Installers and suppliers are to attend pre-installation meetings scheduled by Contractor.

B. Comply with manufacturers written recommendations and installation instructions unless more restrictive requirements are specified.

C. Locate Work and components accurately, in correct alignment and elevation.

1. Make vertical work plumb and horizontal work level.

2. Install components to allow space for maintenance and ease of removal for replacement.

D. Install products at time and under conditions to ensure best possible results; maintain conditions required for product performance until Substantial Completion.

E. Conduct operations so no part of Work is subject to damaging operations or excessive loads during normal conditions.

F. Securely anchor permanent construction in place, accurately located and aligned with other portions of Work.

G. Allow for building movement including thermal expansion and contraction.

H. Make joints of uniform width; arrange joints as indicated, for best visual effect where not otherwise indicated; fit exposed connections together to form hairline joints except where otherwise indicated.

1.6 CLEANING

A. Cleaning During Construction: Specified in Section 01 50 00 - Temporary Facilities and Controls.

B. Progress Cleaning: Keep installed areas clean using cleaning materials specifically recommended by manufacturers of product being cleaned; where not otherwise recommended use nontoxic materials that will not damage surfaces.

1. Remove debris from concealed spaces before enclosing space.

2. Supervise construction operations to assure no part of construction, completed or in progress, is subject to harmful, dangerous, damaging, or otherwise deleterious exposure during construction period.

C. Final Cleaning: Execute final cleaning at Substantial Completion.

1. Clean interior and exterior surfaces exposed to view; remove temporary labels, stains and foreign substances; polish transparent and glossy surfaces; vacuum carpeted and soft surfaces.

a. Vacuuming Equipment: Type with high efficiency particulate arrestor (HEPA) type filters; properly maintained.

2. Clean equipment and fixtures to a sanitary condition, clean filters of mechanical equipment, replace filters where cleaning is impractical.

a. Clean ducts.

3. Clean site; sweep paved areas.

4. Remove waste, surplus materials and rubbish from Project and site; recycle to maximum extent feasible.

1.7 PROTECTION

A. Protect products subject to deterioration with impervious cover. Provide ventilation to avoid condensation and trapping water.

B. Take care to use protective covering and blocking materials that do not soil, stain, or damage materials being protected.

C. After installation, provide coverings to protect products from damage from traffic and construction operations, remove when no longer needed.

D. Protect interior materials from water damage; immediately remove wet materials from site to prevent growth of mold and mildew on site.

END OF SECTION

SECTION 01 74 10

WASTE MANAGEMENT

PART 1 - GENERAL

1.1 SUMMARY

A. Project requires special Waste Management Program.

1. CALGreen Waste Management: As required in Section 01 35 15.
2. Provide itemization of costs related to Waste Management Program.
3. Effect optimum control of solid wastes.
4. Prevent environmental pollution and damage.

B. Related Work:
1. Section 01 35 15: CALGreen environmental requirements.
2. Section 01 50 00: Temporary facilities and controls.

1.2 DEFINITIONS

A. Inert Fill: A permitted facility that accepts inert waste such as asphalt and concrete exclusively.

B. Class III Landfill: A landfill that accepts non-hazardous waste such as household, commercial, and industrial waste, including construction, remodeling, repair, and demolition operations.

C. Construction and Demolition Waste: Includes solid wastes, such as building materials, packaging, rubbish, debris, and rubble resulting from construction, remodeling, repair, and demolition operations.

1. Rubbish: Includes both combustible and noncombustible wastes, such as paper, boxes, glass, crockery, metal and lumber scrap, tin cans, and bones.

2. Debris: Includes both combustible and noncombustible wastes, such as leaves and tree trimmings that result from construction or maintenance and repair work.

D. Chemical Waste: Includes petroleum products, bituminous materials, salts, acids, alkalis, herbicides, pesticides, organic chemicals and inorganic wastes.

E. Sanitary Wastes:

1. Garbage: Refuse and scraps resulting from preparation, cooking, distribution, or consumption of food.

2. Sewage: Domestic sanitary sewage.

1.3 SUBMITTALS

A. Waste Management Program: Comply with Contract Documents and applicable code requirements for salvaging, recycling, and disposing of nonhazardous waste.

1. Prior to commencement of Work, schedule and conduct meeting with Owner and Architect to discuss proposed Waste Management Program.

2. Develop mutual understanding relative to details of recycling, and rebate programs.

3. Prepare and submit a written and graphic Waste Management Program including, but not limited to, the following:

a. Indicate procedures to be implemented.

b. Estimate total Project waste to be generated, and estimated cost of disposing of Project waste in landfills.

c. Estimate total cubic yards of following waste categories to be diverted from landfill.

1) Clean dimensional wood, palette wood.
2) Plywood, oriented strand board, and medium density fiberboard.
3) Cardboard, paper, packaging.
4) Other items as directed by Owner and Architect.

d. Estimate amounts of following waste categories in appropriate units (weight, feet, square yards, gallons).

1) Metals.
2) Gypsum board.
3) Carpet.
4) Paint.
5) Other items as directed by Owner and Architect.

e. Submit permit or license and location of waste disposal areas.

f. Submit procedures for recycling/re-use program.

g. Submit procedures for rebate programs.

h. Revise and resubmit Waste Management Program as required by Owner and Architect.

1) Review of Contractor's Waste Management Program will not relieve Contractor of responsibility for control of pollutants and other environmental protection measures.

B. Submit summary of solid waste generated by Project with each application for progress payment, on form acceptable to Owner and Architect; include manifests, weight tickets, receipts, and invoices identifying Project and waste delivered to following locations.

1. Recycling Centers.
2. Class III landfills.
3. Inert fills.

C. Prepare rebate information and product documentation as required for Owner to qualify for rebate programs; submit with final closeout submittals.

1. Where feasible submit in electronic format, otherwise in 3-ring binder.

1.4 RECYCLING PROGRAM

A. Recycling: Implement recycling program that includes separate collection of waste materials of following types as applicable to Project requirements; recycling program to be applied by Contractors and subcontractors.

1. Land clearing debris.
2. Asphaltic concrete.
3. Concrete.
4. Masonry materials.
5. Ferrous metal.
6. Non-ferrous metal.
7. Clean dimensional wood and palette wood.
8. Plywood, oriented strand board, and medium density fiberboard.
9. Paper - bond.
10. Paper - newsprint.
11. Cardboard and paper packaging materials.
12. Glass.
13. Plastics.
14. Gypsum board (unpainted).
15. Paint.
16. Rigid foam.
17. Carpet and pad.
18. Beverage containers.
19. Porcelain plumbing fixtures.
20. Insulation.
21. Others as appropriate.

B. Handling: Keep materials free of dirt, adhesives, solvents, petroleum contamination, and other substances deleterious to recycling process.

1. Clean materials contaminated prior to placing in collection containers.

2. Arrange for collection by or delivery to appropriate recycling center or transfer station that accepts construction and demolition waste for purpose of recycling.

C. Participate in Re-Use Programs: Rebates, tax credits, and other savings obtained for recycled or re-used materials shall accrue to Contractor.

END OF SECTION

SECTION 01 77 00

CLOSEOUT PROCEDURES

PART 1 - GENERAL

1.1 SUMMARY

A. This section describes Contract closeout procedures.

1. Substantial Completion.
2. Final Completion.
3. Project record documents.
4. Material and finish data.
5. Operation and maintenance manuals.

B. Related Requirements:

1. Section 01 30 00: Administrative requirements including attic stock.
2. Section 01 78 00: Warranties.
3. Section 01 79 00: Demonstration and training.

1.2 SUBSTANTIAL COMPLETION

A. Immediately prior to Substantial Completion, schedule agency reviews as required for “temporary certificate of occupancy” or for “certificate of occupancy”.

B. When Contractor considers Work, or a designated portion thereof is substantially complete, submit written notice, with list of items to be completed or corrected.

1. List (“Punch List”): Format pre-approved by Owner and Architect; tabular form with each space listed required.

C. Within a reasonable time, Owner and Architect will inspect status of completion and may add to “Punch List”.

1. Contractor shall pay for Architect's time and direct expenses where more than one Substantial Completion inspection is required.

D. Should Owner and Architect determine Work is not substantially complete, Contractor will be promptly notified in writing, giving reasons.

E. Contractor shall remedy deficiencies and send a second written notice of substantial completion; Architect will reinspect Work.

1. Contractor shall pay for Architect's time and direct expenses where more than one Substantial Completion inspection is required.

F. When Work is determined to be substantially complete by Architect, a Certificate of Substantial Completion will be prepared in accordance with General Conditions.

1.3 FINAL COMPLETION

A. When Work is complete, submit written certification indicating:

1. Work has been inspected for compliance with Contract Documents.

2. Work has been completed in accordance with Contract Documents and deficiencies listed (in ‘Punch List”) with Certificate of Substantial Completion have been corrected.

3. Equipment and systems have been tested in presence of Owner's representative and are operational.

4. Work is complete and ready for final inspection.

B. Special Submittals: In addition to submittals required by Contract, submit following.

1. Provide submittals required by governing authorities to governing authorities with copies included in Project Record Documents.

2. Submit final statement of accounting giving total adjusted Contract Sum, previous payments, and sum remaining due.

1.4 PROJECT RECORD DOCUMENTS

A. Keep documents current; do not permanently conceal any work until required information has been recorded.

1. Owner will provide Contractor with a separate set of Drawings to maintain for Project Record Documents.

2. Store reproducible Drawings, one set of Project Manual, and one copy of each Change Order separate from documents used for construction, for use as Project Record Documents.

3. Indicate actual work on Drawings; indicate actual products used in Project Manual, including manufacturer, model number and options.

4. Update Project Record Documents daily and allow for Architect inspection at least once a month.

B. At Contract close-out submit documents with transmittal letter containing date, Project title, Contractor's name and address, list of documents, and signature of Contractor.

C. As-Built Documents: General Contractor shall have electronic “As Built” sets of Contract Documents (Project Drawings and Project Specifications) prepared prior to Final Completion.

1. Contractor shall use one complete electronic set of Contract Documents (Drawings and Specifications) for use for “As-Builts”.

2. As-Built Drawings: Revise Drawings based on Record Documents and field measurements made after installation and indicate actual locations of structural elements, ducts, piping, wiring, and equipment.

    a. Professional draftspersons experienced in electronic media used for Contract Documents shall revise original Project Drawings based on information recorded on Project Record Documents.

3. As-Built Specifications: Revise Specifications to indicate manufacturers who provided materials specified along with specifics indicating accessories, options, and finishes used in Project.

    a. Cross referencing Submittal records is acceptable for accessories only.

4. Review Submittal: Submit two copies of electronic media of “As-Built” Documents to Architect for review.

    a. After Architect review, revise where indicated and submit final electronic media to Owner.

D. Final Completion Submittal: At Project Completion submit both Project Record Documents and As-Built Documents with transmittal letter containing date, Project title, Contractor's name and address, list of documents, and signature of Contractor.

1.5 MATERIAL AND FINISH DATA

A. Provide data for primary materials and finishes.

B. Submit two sets prior to final inspection, bound in 8-1/2" by 11" three-ring binders with durable plastic covers, clearly identified regarding extent of contents.

1. Electronic Format: Where available in electronic format, submit USB 3.0 flash drives with information required for material and finish data.

C. Arrange by Specification division and give names, addresses, and telephone numbers of subcontractors and suppliers. List:

1. Trade names, model or type numbers.
2. Cleaning instructions.
3. Product data.
4. Maintenance recommendations.

1.6 OPERATION AND MAINTENANCE MANUALS

A. Provide manuals for:

1. Electrically operated items.
2. Electrical equipment and controls.
3. Maintenance manuals provided as part of Submittals.

B. Submit two sets prior to final inspection, bound in 8-1/2" by 11" three-ring binders with durable plastic covers, clearly identified regarding extent of contents.

C. Provide a separate volume for each system, with a table of contents and index tabs for each volume.

D. Arrange by Specification division and gives names, addresses, and telephone numbers of Subcontractors and suppliers. List:

1. Appropriate design criteria.
2. List of equipment and parts lists.
3. Operating and maintenance instructions.
4. Shop drawings and product data.

E. Electronic Format: Where available in electronic format, submit two USB 3.0 flash drives with information required for operation and maintenance manuals.

END OF SECTION

SECTION 01 78 00

WARRANTIES

PART 1 - GENERAL

1.1 SUMMARY

This section is in addition to section 4 of the General Provisions.

A. Warranties: Compile required, and incidental warranties required by Contract Documents.

1. Manufacturer Warranties: Provide manufacturer's standard warranties where specified including inspections and services included or required as part of manufacturer's standard warranty.

2. Special Warranties: Provide special warranties as required by Specifications sections.

3. These warranties shall be in addition to and not a limitation of other rights Owner may have against Contractor under Contract Documents and which may be prescribed by law, regardless of wording of warranty.

B. Extended Correction Period: Contractor shall correct failure of materials and systems to perform in a manner consistent with their intended use including but not limited to failure of waterproofing and roofing systems to resist penetration from water.

1. Standard Correction Period: One year after Substantial Completion or Beneficial Occupancy by Owner except where otherwise noted in Contract Documents; coordinate with General Conditions and Supplementary Conditions.

a. Items used by Contractor during construction operations shall not be considered substantially completed.

b. Correction of Work Period begins with Owner occupancy not completion of component.

2. Extended Correction Period: Requirements are same as standard correction period but for an extended period as indicated in Specifications sections.

3. Contractor Responsibilities: Bear cost of correcting failed work and replacing construction damaged by failure of materials and systems to perform in a manner consistent with their intended use during correction period.

a. Requirements for correction period shall apply to Subcontractors, suppliers, installers, and those responsible for failed work.

b. Owner and Design Team shall not be responsible for determining degree of responsibility of those involved.

4. Owner’s Rights under Law: Correction period shall be in addition to and not a limitation of other rights Owner may have against Contractor under Contract Documents and which may be prescribed by law.

1.2 FORM OF SUBMITTAL

A. Special Warranty and Extended Correction Period Forms: Provide duplicate copies, notarized or on Contractor and Manufacturer's letterhead without conditions or exceptions to requirements specified.

1. Assemble documents executed by subcontractors, installers, suppliers, and manufacturers.

2. Provide table of contents and assemble in binder with durable plastic cover, clearly identified regarding extent of contents.

3. Electronic Format: Submit USB 3.0 flash drives of warranties, in Microsoft Word.

B. Manufacturer Warranty Forms: Use manufacturer’s standard forms unless otherwise directed in Contract Documents; completed form shall not detract from or confuse interpretations of Contract Documents.

1. Manufacturer’s authorized representative shall sign manufacturer warranties.

2. Subcontractor and installer shall countersign warranty where specified.

a. Provide required warranties for waterproofing and roofing systems countersigned by subcontractor and installer.

C. Submit final warranties prior to final application for payment.

1. For equipment put into use with Owner's permission during construction, submit within ten days after first operation.

2. For items of Work delayed materially beyond Date of Substantial Completion, provide updated submittal within ten days after acceptance, listing date of acceptance as start of warranty period.

D. Provide information for Owner's personnel regarding proper procedure in case of failure and instances that might affect validity of manufacturer warranty.

E. Size: 8-1/2" by 11" for three-ring binder; fold larger sheets to fit.

1.3 WARRANTIES AND CORRECTION OF WORK DOCUMENTS

A. Warranties and Correction of Work Documents are intended to protect Owner against failure of work and against deficient, defective and faulty materials and workmanship, regardless of sources.

B. Limitations: Warranties and correction of work requirements are not intended to cover failures that result from:

1. Unusual or abnormal phenomena of the elements.

2. Owner's misuse, maltreatment or improper maintenance of work.

3. Vandalism after substantial completion.

4. Insurrection or acts of aggression including war.

C. Related Damages and Losses: Remove and replace work which is damaged as result of failure, or which must be removed and replaced to provide access for correction of work.

D. Reinstatement: After correction of work reinstate warranty or extended correction period for corrected work to date of original expiration, but not less than half original period.

1. Correction of Work Period: The general correction of work period specified shall not be extended by corrective work except to extent required to correct failure and repair or replace materials damaged by failure.

E. Replacement Cost: Replace or restore failing items without regard to anticipated useful service lives where part of correction of work period, extended correction of work period, and special warranty period unless otherwise noted.

F. Rejection of Warranties: Owner reserves right to reject unsolicited and coincidental product warranties that detract from or confuse interpretations of Contract Documents.

END OF SECTION

SECTION 01 79 00

DEMONSTRATION AND TRAINING

PART 1 - GENERAL

1.1 SUMMARY

A. Section Includes: Provide equipment and systems demonstration and instruction in accordance with Contract Documents.

1. Video record seminars and system demonstrations.

B. Related Sections:

1. Section 01 31 00: Project management and coordination.
2. Section 01 77 00: Contract closeout procedures.
3. Refer to Facility Services Subgroups for mechanical and electrical requirements.

1.2 DESCRIPTION

A. Seminar Agenda and Outline:

1. Prepare a seminar agenda and outline in consultation and cooperation with Owner. Include following:

a. Equipment and systems that will be included in seminars.
b. Name of companies and representatives presenting at seminars.
c. Outline of each seminar's content.
d. Time and date allocated to each system and item of equipment.

2. Submit preliminary seminar agenda and outline for review and comment by Owner.

a. Revise and resubmit agenda and outline until all seminar requirements have been satisfied and seminar dates and presenters have been finalized.

3. Submit final seminar agenda and outline no later than eight weeks before date of Acceptance of Work.

B. Seminar Organization:

1. Contractor’s presentation leaders shall chair seminars.

a. Coordinate qualification of training personnel, seminar contents, and presentations with Owner.

2. Coordinate individual presentations and ensure manufacturer’s representatives scheduled to be at training seminars are present.

3. Arrange for presentation leaders familiar with design operation, maintenance and troubleshooting of equipment and systems.

    a. Where one person is not familiar with all aspects of equipment or system; arrange for specialists familiar with each aspect.

4. Coordinate proposed seminar dates with Owner and select mutually agreeable dates.

5. Video Recording: Arrange for video recording (audio and video) of training seminars and system demonstrations, including seminar and demonstration questions and answers.

C. Seminar Content:

1. Architect’s Consultants will explain design philosophy of primary systems.

2. Include following information in presentations dealing with specific systems.

    a. An overview of how system is intended to operate.
    b. Describe design parameters, constrains and operational requirements.
    c. Describe system operation strategies.
    d. Provide information to help in identifying and troubleshooting problems.

3. Include following information in presentations dealing with equipment.

    a. Explanation of how equipment operates.
    b. Recommended preventative and routine maintenance.

D. System Demonstration:

1. Demonstrate operation of equipment and systems when specified in individual technical sections. Include following in demonstration.

    a. Start-up and shut down.
    c. Operation.
    d. Scheduled and preventative maintenance.
    e. Troubleshooting.

2. Demonstration may be conducted at time of original starting with Owner's prior approval.

E. Seminar and Demonstration Questions:

1. Be prepared to answer questions raised by Owner’s personnel at demonstrations and seminars.

2. If unable to satisfactorily answer questions immediately, provide written response within three days.

F. Use manufacturer’s operation and maintenance data as basis of instruction.

1.3 SUBMITTALS

A. Video Recording: Submit three copies of each video recording in DVD format acceptable to Owner; include label on each DVD and on each container identifying Project and Seminar content.

END OF SECTION

SECTION 03 10 00

CONCRETE FORMING AND ACCESSORIES

PART 1 – GENERAL

1.1 SECTION INCLUDES

A. Forms for all cast-in-place concrete indicated on the Drawings and subsequent removal of forms, except those earth forms described in this Section.

1.2 RELATED SECTIONS

A. Section 03 20 00 – Concrete Reinforcing.

B. Section 03 30 00 – Cast-in-Place Concrete.

1.3 QUALITY ASSURANCE

A. Qualifications of workmen: All workmen shall be experienced mechanics. Provide one person who shall be present at all time during execution of this portion of the work who shall be thoroughly familiar with the type of material being installed, the referenced standards and the requirement of this Work and shall direct all Work performed under this Section.

B. Codes and Standards: In addition to complying with all pertinent codes and regulations, comply with all pertinent recommendations contained in "Recommended Practice for Concrete Formwork," publication ACI 347R and ACI 318, Section 6.1.

C. Where provisions of pertinent codes and standards conflict with the requirement of this Section, the more stringent provision shall govern.

D. All Structural Concrete foundations, curbs, floors and any other structural component requiring structural forming or shoring shall be Engineer Designed Systems with calculations and erection drawings provided by the Contractor. Contractor is to secure the services of a California Registered Structural Engineer for the design of Forming Systems.

1.4 PRODUCT HANDLING

A. Protection: Contractor is to protect all formwork materials before, during and after installation.

B. Damaged Forms: In the event of damage or misalignment, immediately make all repairs and replacement necessary at no additional cost to the Owner.

PART 2 – PRODUCTS

2.1 MATERIALS

A. Form lumber: All form lumber shall be new except as allowed for re-use of forms in Part 3 of this Specification, and all form lumber shall be one of the following, a combination thereof, or an equal approved in advance by the Architect.

1. Plywood forms may be Plyform, Plyron, and bearing the label of the Douglas Fir Plywood Association.
2. Form-lumber may be; fir, larch, hemlock, or approved equal seasoned lumber and surfaced on all four sides.
3. Form sealers shall be liquid form oil.

B. Not used.

C. Other form materials and/or forming systems may be used if approved by the Owner, Architect and Structural Engineer. A complete list of materials, manufacturers and methods of application are to be submitted to the Architect, in accordance with Division 01.

2.2 TIES AND SPREADERS

A. Form ties shall be of proven types and shall be a type which does not leave an open hole through the concrete and which permits patching at every hole.

B. When forms are removed, all metal ties shall be removed and shall be flush with the concrete surface. No metal ties shall be exposed on the exterior of the walls.

2.3 ALTERNATE FORMING SYSTEMS

A. Not used.

2.4 OTHER MATERIALS

A. All other form materials, not specifically described herein, but required for proper completion of concrete formwork, shall be as selected by the Contractor subject to approval by the Owner or Architect.

PART 3 - EXECUTION

3.1 INSPECTION

A. Contractor shall verify and be responsible for all-existing dimensions and elevations before any Work is done.

B. Inspect the installed Work of all other trades; verify that all such Work is complete, and that the installation of Formwork may begin.

C. Verify that forms have been constructed in accordance with all pertinent codes and regulations, referenced standards and the design.

D. Discrepancies: Do not proceed with installation in areas of discrepancy. Notify the Architect of all discrepancies. All discrepancies are to be fully resolved before proceeding with installation.

3.2 CONSTRUCTION FORMS

A. Forms are to be constructed sufficiently tight to prevent leakage of concrete, and able to withstand excessive deflection when filled with wet concrete. Forms shall be braced, anchored and properly aligned.

B. Layout and form all required cast-in-place concrete to the required dimensions indicated on the Drawings.

C. Care shall be exercised in the layout of forms to avoid the necessity for cutting, patching, or repair of concrete after it is in place.

D. Make provisions for all openings, offsets, recesses, anchorage, blocking and other requirements of the Work.

E. Perform all forming required for Work of other trades and do all cutting and repairing of forms required to permit such installations.

F. Carefully examine the Drawing and Specifications and verify with other trades for openings, reglets, chases, and other items that are required in the forms.

G. Forms for pre-cast concrete shall be constructed to provide for shrinkage of the concrete, and shall be adequately braced. All edges shall have chamfer strips except as noted on Drawings.

H. Construct all forms true, plumb, and square within a tolerance of 1/8" in 12 feet.

3.3 EMBEDDED ITEMS

A. Provide, install and check all required steel frames, angles, grilles, bolts, inserts and other such items required to be anchored in the forms before the concrete is placed.

3.4 BRACING

A. Properly brace and tie the forms together so as to maintain size, shape, and alignment, and to provide safety to personnel.

B. Construct all bracing and supporting members of ample size and strength to safely support, without excessive deflection, all dead and live loads to which they may be subjected.

3.5 PLYWOOD FORMS

A. Plywood forms shall be designed for loads imposed. Nail the plywood panels directly to studs and apply in a manner to minimize the number of joints.

B. Make all panel joints tight butt joints with all edges true and square, if necessary, use tape to prevent excessive leakage.

3.6 FOOTING FORMS

A. Foundation forms are to be wood forms.

B. Earth forms may be used for footings provided the soil will stand without caving, as determined by the Architect (Structural Engineer) and the sides of the bank are made with a neat cut to the minimum dimensions indicated.

3.7 REUSE OF FORMS

A. Reuse of forms shall be subject to approval of the inspector.

B. Reuse of forms shall not delay or change the schedule for placement of concrete from the schedule if all forms were new.

C. Reuse of forms shall not affect the structural stability of the forms or the appearance of the finished concrete.

3.8 REMOVAL OF FORMS

A. Side forms of foundations may be removed 48 hours after placement of concrete. Where foundations are supporting lateral loads, forms shall not be removed until approved by the inspector.

B. Use care and diligence, and protect workmen, passers-by, and the installed work and materials of other trades. Forms shall not be removed until the concrete can support all loads.

C. Cut nails, tie wires and form ties off flush, leave all surfaces smooth and clean.

D. Remove metal spreader ties and fill in the resulting pockets to match the surrounding areas with grout or dry pack. Sack all exposed faces.

E. Fill all holes resulting from the use of bolts, ties, spreaders and sleeve nuts with cement grout applied under pressure by means of a grouting gun; grout shall be one part Portland cement, to two parts sand; apply grout immediately after removing forms.

3.9 CLEANING

A. Remove all forming material from the site and dispose of in approved dumps.

B. Clean area of all left over debris including stakes, ties, form boards, wires, concrete spills, etc., and leave area in a neat clean condition.

END OF SECTION

SECTION 03 20 00

CONCRETE REINFORCING

PART 1 - GENERAL

1.1 SUMMARY

A. Section Includes:

1. Concrete steel reinforcement as indicated.

B. Related Sections:

1. Section 03 10 00 - Concrete Forming and Accessories.
2. Section 03 30 00 - Cast-in-Place Concrete.

1.2 SYSTEM DESCRIPTION

A. Regulatory Requirements: Fabrication and placement of reinforcing shall be in accordance with requirements of CBC, Chapter 19A.

1.3 SUBMITTALS

A. Shop Drawings: Submit steel reinforcement Shop Drawings in accordance with ACI 315. Include assembly diagrams, bending charts and slab plans. Indicate lengths and location of splices, size and lengths of reinforcing steel.

B. Closeout Submittals: Record exact locations of reinforcing that vary from Shop Drawings.

1.4 QUALITY ASSURANCE

A. Comply with the following as a minimum requirement:

1. Concrete Reinforcing Steel Institute (CRSI) Manual of Standard Practice.
2. American Welding Society (AWS).
3. American Concrete Institute (ACI).
4. CBC, Chapter 19A, Concrete.

B. Source Quality Control: Refer to Division 01 Sections for general requirements and to following paragraphs for specific procedures. Testing laboratory retained by the Owner shall perform following conformance testing, select test Samples of bars, ties, and stirrups from the material at the Project site or from the place of distribution, with each Sample consisting of not less than two 18 inch long pieces, and perform the following tests according to ASTM A 615.

1. Identified Bars: If Samples are obtained from bundles as delivered from the mill, identified as to heat number, accompanied by mill analyses and mill test reports, and properly tagged with the identification certificate so as to be readily identified, perform one tensile and one bend test for each 10 tons or fraction thereof of each size of bars. Submit mill reports when Samples are selected.

2. Unidentified Bars: When positive identification of reinforcing bars cannot be performed and when random Samples are obtained, perform tests for each 2.5 tons or fraction thereof, one tensile and one bend test from each size of bars.

C. Certification of Welders: Shop and Project site welding shall be performed by certified welding operators.

1.5 DELIVERY, STORAGE AND HANDLING

A. Avoid exposure to dirt, moisture or conditions harmful to reinforcing.

B. Reinforcing steel bars, wire, and wire fabric shall be stored on the Project site to permit easy access for examination and identification of each shipment. Material of each shipment shall be separated for size and shape.

PART 2 - PRODUCTS

2.1 GENERAL

A. Provide reinforcing of sizes, gages and lengths indicated, bent to indicated shapes.

2.2 MATERIALS

A. Steel Reinforcing Bars: ASTM A 615 and A 706 for welding, grade 60 billet steel unless otherwise specified or indicated.

B. Bars or Rod Mats: ASTM A 184.

C. Wire Fabric for Reinforcement: ASTM A 185.

D. Tie Wire: ASTM A 82, fully annealed, copper-bearing steel wire, 16 gage minimum.

E. Chairs, Spacers, Supports, and Other Accessories: Standard manufacture conforming to ACI-315 fabricated from steel wire of required types and sizes. For reinforcement supported from grade, provide properly sized dense precast blocks of concrete.

2.3 FABRICATION OF REINFORCING BARS

A. Comply with CRSI Manual of Standard Practice for Reinforced Concrete Construction for fabrication of reinforcing steel.

B. Bending and Forming: Fabricate bars of the indicated sizes and bend and form to required shapes and lengths by methods not injurious to materials. Do not heat reinforcement for bending. Bend bars No. 6 size and larger in the shop only. Bars with unscheduled kinks or bends are not permitted. Provide only tested and permitted bar materials.

C. Welding: Provide only ASTM A 706 steel where welding is indicated. Perform welding by the direct electric arc process in accordance with AWS D1.4 and specified low-hydrogen electrodes. Preheat 6 inches each side of joint. Protect joints from drafts during the cooling process; accelerated cooling is not permitted. Do not tack weld bars. Clean metal surfaces to be welded of loose scale and foreign material. Clean welds each time electrode is changed and chip burned edges before placing welds. When wire brushed, the completed welds must exhibit uniform section, smooth welded

metal, feather edges without undercuts or overlays, freedom from porosity and clinkers, and good fusion and penetration into the base metal. Cut out welds or parts of welds deemed defective, using chisel, and replace with proper welding. Prequalification of welds shall be in accordance with CBC requirements.

PART 3 - EXECUTION

3.1 INSTALLATION

A. Bars shall be bent cold. Bars partially embedded in concrete shall not be field bent except as indicated on reviewed Shop Drawings. Before installation, clean reinforcing of loose scale, rust, oil, dirt and any coating that could reduce bond.

B. Accurately position, install, and secure reinforcing to prevent displacement during the placement of concrete.

C. Provide metal chairs to hold reinforcement the required distance above form bottoms. Space chairs so that reinforcement will not be displaced during installation. Provide metal spacers to secure proper spacing. Stirrups shall be accurately and securely wired to bars at both top and bottom. At slabs, footings, and beams in contact with earth, provide concrete blocks to support reinforcement at required distance above grade.

D. Install and secure reinforcement to maintain required clearance between parallel bars and between bars and forms. Lapped splices shall be installed wherever possible in a manner to provide required clearance between sets of bars. Stagger lapped splices. Dowels and bars extending through construction joints shall be secured in position against displacement before concrete is installed and subsequently cleaned of concrete encrustation’s while they are still soft.

E. Do not install reinforcing in supported slabs and beams until walls and columns have been installed to underside of slabs and beams or until construction joints have been thoroughly cleaned. Reinforcing shall be inspected before placement of concrete and cleaned as required.

F. Use deformed bars unless otherwise indicated, except for spiral reinforcement.

3.2 CLEAN UP

A. Remove rubbish, debris and waste materials and legally dispose of off the Project site.

3.3 PROTECTION

A. Protect the Work of this section until Substantial Completion.

END OF SECTION

SECTION 03 30 00

CAST-IN-PLACE CONCRETE

PART 1 – GENERAL

1.1 SUMMARY

A. Section Includes:

1. Cast-in-place concrete placement and finishing.
2. Related Sections:
   a. Section 03 10 00 - Concrete Forming and Accessories.
   b. Section 03 20 00 - Concrete Reinforcing.

1.2 SUBMITTALS

A. Shop Drawings: Submit Shop Drawings indicating locations of cast-in-place concrete Work and accessory items such as vapor barriers. Include details and locations of reinforcing, embedded items, and interfacing with other Work.

B. Product Data:

1. Mix Design: Submit a concrete mix design for each mix that will be provided for the Work. Include water/ cement ratio, size of coarse aggregate and amount of any admixture. Predict minimum compressive strength, maximum slump and air content percentage.
2. Manufacturer of ready-mixed concrete shall deliver to the inspector a certificate with each mixer truck. Certificate shall bear the signature of representative of the testing laboratory, and shall state quantity of cement, water, fine and coarse aggregate and admixtures.

C. Material Samples: Submit Samples illustrating concrete finishes, minimum 12 inches x 12 inches in size.

D. Certificates: Submit a notarized certificate that each of following conforms to standards indicated:

1. Aggregates - ASTM Standards C33
2. Admixtures - ASTM Standards C260
3. Curing materials - ASTM Standards C171

1.3 QUALITY ASSURANCE

A. Comply with the following as a minimum requirement.

B. American Concrete Institute (ACI) Publication:

1. ACI 211 - Recommended Practice for Selecting Proportions of Concrete.
2. ACI 304 - Recommended Practice for Measuring, Mixing, Transporting and Placing Concrete.

3. ACI 305 - Recommended Practice for Hot Weather Concreting.
4. ACI 306 - Recommended Practice for Cold Weather Concreting.
5. ACI 308 - Recommended Practice for Curing Concrete.
6. ACI 309 - Recommended Practice for Consolidation of Concrete.

C. American Society for Testing and Materials (ASTM) Standards:
1. ASTM A 185 - Welded Steel Wire Fabric For Concrete Reinforcement.
2. ASTM C 31 - Making and Curing Concrete Test Specimens in the Field.
3. ASTM C 33 - Concrete Aggregates.
4. ASTM C 39 - Compressive Strength of Cylindrical Concrete Specimens.
5. ASTM C 88 - Soundness of Aggregates by use of Sulphate or Magnesium Sulphate.
6. ASTM C 94 - Ready-Mixed Concrete.
7. ASTM C 143 - Slump of Hydraulic Cement Concrete.
8. ASTM C 150 - Portland Cement.
9. ASTM C 171 - Sheet Materials for Curing Concrete.
10. ASTM C 172 - Sampling Freshly Mixed Concrete.
11. ASTM C 173 - Air Content of Freshly Mixed Concrete by the Volumetric Method.
12. ASTM C 227 - Potential Alkali Reactivity of Cement-Aggregate Combinations (Mortar-Bar Method).
13. ASTM C 231 - Air Content of Freshly Mixed Concrete by the Pressure Method.
14. ASTM C 260 - Air-Entraining Admixtures for Concrete.
15. ASTM C 289 - Potential Reactivity of Aggregates (Chemical Method).
16. ASTM D 1751 - Preformed Expansion Joint Fillers for Concrete Paving and Structural Construction (Non-extruding and Resilient Bituminous Types).

D. Continuous inspection shall be provided at the batch plant and for transit-mixed concrete to run check sieve analysis of aggregate, check moisture content of fine aggregate, check design of mix, check cement being used with test reports, check loading of mixer trucks, and certify to quantities of materials placed in each mixer truck.

E. Inspection shall be performed by a representative of a testing laboratory selected by the Owner. Owner will pay for inspection costs. Notify the laboratory 24 hours in advance of time concrete is to be mixed. Notify the laboratory of postponement or cancellation of mixing within at least 24 hours of scheduling time.

F. Continuous batch plant inspection requirement may be waived in accordance with CBC Section 1705A.3.3.1. Waiver shall be in writing, including DSA approval.

G. Strength Test of Concrete: Refer to Section 01 45 33 - Code-Required Special Inspections.

1.4 DELIVERY, STORAGE AND HANDLING

A. Mixing and Placing Concrete: Refer to Section 01 45 33 - Code-Required Special Inspections.

B. Ready-mix concrete shall be mixed and delivered in accordance with ASTM C 94 and CBC Standard 19A-3 and 19A-4. Each batch of concrete delivered to the Project site shall be accompanied by a time slip bearing departure time and signature of batch plant supervisor. Concrete shall be placed within 90 minutes after start of mixing.

C. Store cement and aggregate materials so as to prevent their deterioration or intrusion by foreign matter. Deteriorated or contaminated materials shall not be furnished.

1.5 JOB CONDITIONS

A. Cold Weather Requirements:

1. Adequate equipment shall be provided for heating concrete materials and protecting concrete during freezing or near-freezing weather. Surfaces, in which concrete is to come in contact with, shall be free from frost or ice. No frozen materials or materials containing ice shall be furnished.

2. When placing concrete during freezing or near-freezing weather the mix shall have a temperature of at least 50 degrees F., but not more than 90 degrees F. when cement is added. Concrete shall be maintained at a temperature of at least 50 degrees F. for at least 72 hours after placing or until it has thoroughly hydrated. When necessary, concrete materials shall be heated before mixing. Special precautions shall be provided for protection of transit-mixed concrete.

B. Hot Weather Requirements:

1. During hot weather, proper attention shall be provided for ingredients, production methods, handling, placing, protection and curing, to prevent excessive concrete temperatures or water evaporation which could impair required strength or durability.

PART 2 - PRODUCTS

2.1 GENERAL

A. Ready-Mixed Concrete: Mix and deliver in accordance with requirements of CBC Chapter 1905A.

B. Strength of Concrete: Concrete, unless otherwise indicated or specified, shall be provided with a minimum ultimate 28-day strength of 3000 psi (f'c). For high-early-strength concrete, age for reaching the f'c shall be as indicated on Drawings.

2.2 MATERIALS

A. Cement: ASTM C 150 Type II Portland Cement. Furnished cement shall be as selected and reviewed for concrete proportioning.

B. Aggregates: Aggregates shall conform to ASTM C 33 and C 227 except as modified herein. Any suitable individual grading of coarse aggregate may be furnished,

provided Grading of Combined Aggregate indicated in following table is obtained. Refer to Section 01 45 23: Testing and Inspection.

GRADING OF COMBINED AGGREGATE			
Sieve Sumber or Size in inches	1-1/2" Maximum	1" Maximum	3/4" Maximum
Passing a 2"	------	------	------
Passing a 1-1/2"	95-100	------	------
Passing a 1"	70-90	90-100	------
Passing a 3/4"	50-80	70-95	90-100
Passing a 3/8"	40-60	45-70	55-75
Passing a No. 4	35-55	35-55	40-60
Passing a No. 8	25-40	27-45	30-46
Passing a No. 16	16-34	20-38	23-40
Passing a No. 30	12-25	12-27	13-28
Passing a No. 50	2-12	5-15	5-15
Passing a No. 100	0-3	0-5	0-5

C. Water: Water shall be potable and free from deleterious matter.

D. Admixtures: CBC Chapter 19A, Section 1903A.6, Type A or D.

E. Expansion Joint Fillers: Preformed strips, non-extruding and resilient bituminous type, of thickness indicated, conforming to ASTM D 1751.

F. Curing Paper and Liquid Curing Compounds:

1. Curing Paper: A standard brand conforming to ASTM C 171, Type 1 - Regular, Kure-N-Seal.
2. Liquid Curing Compounds: A standard brand, clear liquid conforming to ASTM C 309, Master Builders, Grace, Antihydro.

G. Abrasive Aggregate: Norton Alundum, Union Carbide Carborundum, or equal, graded #12 through #30 sizes, color as selected by Architect.

H. Underlayment: Latex underlayment for filling low spots in concrete shall be Tile-Tex by Flintkote Co., Webtex #60 or Fixallatex by Dowman Products Co.

I. Vapor Retarder: See Section 07 26 16 - Under-Slab Vapor Retarder.

J. Stair Strips and Nosing:

1. Fabricated from 6063-T5 extruded aluminum, mill finish. Anti-slip filler shall contain at least 60 percent virgin grain aluminum oxide abrasive. Binder shall be fully cured resilient type epoxy, with binder-to-filler ratio of 13 percent. The epoxy-abrasive filler shall extend over the curved front edge of the nosing and shall be securely bonded to the extruded aluminum base.
2. Manufactured by Wooster Products Inc. American Safety Tread Co. Inc., or equal.

3. Nosing and strips for concrete casting shall be provided with Sure-Hold anchors, chevron shaped continuous full length of nosing or strip.
4. Nosings and anchors for attachment to hydrated concrete stairs and wood stairs shall be similar to those specified below, except they shall be provided with countersunk holes for screws and fasteners.
5. Colors: As selected by Architect to contrast with stair color. Colors shall extend uniformly through the filler.
6. Strip and Nosing Types:
    a. Nosings for sloped riser steel pan stairs: Type WP4J, 4-1/16 inches wide, 3/8 inch thick.
    b. Nosings for new concrete stairs: Type WP4C, 4-1/16 inches wide, 3/8 inch thick, nose projects down 1/4 inch.
    c. Nosings for square edged steel pan stairs: Type WP4SP, 4-1/16 inches wide, 3/8 inch thick nose.
    d. Strips for recessing into concrete stairs: Type WP1A, except 2-1/4 inches wide, 3/8 inch thick. American Safety Tread Co., Type 24, or equal.
    e. Strips for adhering to existing or hydrated concrete: Flex-Tred anti-safety strips, minimum 2-1/4 inches wide. Cut from rolls and round corners.
    f. Strips for anchoring into wood or stone: American Safety Tread Co., Type 24H, or equal, with holes for fasteners, 2-1/4 inches wide.

PART 3 - EXECUTION

3.1 GENERAL

A. Time of Placing: Do not place concrete until reinforcement, conduits, outlet boxes, anchors, hangers, sleeves, bolts, and other embedded materials are securely fastened in place. Contact the inspector at least 24 hours before placing concrete; do not place concrete until inspected by the inspector.

B. Pouring Record: A record shall be kept on the Project site of time and date of placing concrete in each portion of structure. Such record shall be maintained on the Project site until Substantial Completion and shall be available for examination by the Architect and DSA.

3.2 PREPARATION

A. Vapor Retarder: See Section 07 26 16 - Under-Slab Vapor Retarder.

B. Reglets and Rebates:

1. Form reglets and rebates in concrete to receive flashing, frames and other equipment as detailed and required. Coordinate dimensions and locations required with other related Work.
2. If concrete slabs on grade adjoin a wall or other perpendicular concrete surface, form a reglet in wall to receive and carry horizontal concrete Work. Reglet shall

be full thickness of the slab and shall be 3/4 inch wide, unless otherwise indicated. Requirement does not apply to exterior walks, unless specifically indicated.

C. Not used.

D. Screeds: Install screeds accurately and maintain at required grade or slab elevations after steel reinforcement has been installed, but before starting to place concrete. Install screeds adjacent to walls and in parallel rows not to exceed 8 feet on centers.

3.3 INSTALLATION

A. Conveying and Placing:

1. Concrete shall be placed only under direct observation of the inspector. Do not place concrete outside of regular working hours, unless the inspector has been notified at least 48 hours in advance.
2. Concrete shall be conveyed from mixer to location of final placement by methods, which will prevent separation or loss of materials.
3. Concrete shall be placed as nearly as practicable to its final position to avoid segregation due to re-handling or flowing. No concrete that has partially hydrated or has been contaminated by foreign materials shall be placed, nor shall re-tempered concrete or concrete which has been remixed after initial set be placed.
4. In placing concrete in thin sections, provide openings in forms, elephant trunks, tremies or other recognized devices, to prevent segregation and accumulation of partially hydrated concrete on forms or metal reinforcement above level of concrete being placed. Such devices shall be installed so that concrete will be dropped vertically. Unconfined vertical drop of concrete from end of such devices to final placement surface shall not exceed 6 feet.
5. Concrete shall be placed as a continuous operation until placing of panel or section is completed. Top surfaces of vertically formed lifts shall be level.
6. Concrete shall be thoroughly consolidated during placement, and shall be worked around reinforcement and embedded fixtures with mechanical vibrators.
7. Where conditions make consolidation difficult, or where reinforcement is congested, batches of mortar containing same proportions of cement, sand, and water as provided in the concrete, shall first be deposited in the forms to a depth of at least one inch.

B. Compaction and Screeding:

1. Tamp freshly placed concrete with a heavy tamper until at least 3/8 inch of mortar is brought to surface. Concrete shall then be tamped with a light tamper and screeded with a heavy straightedge until depressions and irregularities are eliminated, and surface is true to finish grades or elevations. Remove excess water and debris.
2. Where slabs are to receive separate cement finish or mortar setting bed, continued tamping to raise mortar to surface is not performed. Laitance shall be

removed by brushing with a stiff brush or by light sandblasting to expose clean top surface of coarse aggregate.

C. Floating and Troweling:

1. When concrete has hydrated sufficiently, it shall be floated to a compact and smooth surface. After floating, wait until concrete has reached proper consistency before troweling. Top surfaces shall receive at least 2 troweling operations with steel hand trowel. Prior to and during final troweling, apply a fine mist of water frequently with an atomizing type fog sprayer. Omit troweling for slabs to receive a separate cement finish.
2. For interior finish slabs, final troweling shall provide a hard, impervious, and non-slip surfaces, free from defects and blemishes. Finished surface shall be within a tolerance of 1/8 inch in 10 feet. Avoid burnishing. Do not add cement or sand to absorb excess moisture.
3. Exterior Paving and Cement Walks: Finish as specified above, except surface shall be given a non-slip broom finish to match Sample reviewed by the Architect.
4. Vertical concrete surfaces shall be finished smooth and free from marks or other surface defects.

D. Curing:

1. Concrete shall be maintained above 50 degrees F., and in a moist condition for 7 days after placing, except that high early strength concrete shall be maintained in a moist condition for 3 days.
2. Before applying curing paper, interior floor treated with colored hardener shall be given a heavy protective coat of colored wax left unpolished, and then immediately covered with paper. If wax is not applied within two hours after final troweling, concrete shall be sprayed with a fine water mist and maintained continuously moist until wax is applied, unless spraying is not recommended by hardener manufacturer. After other Work such as plastering and painting has been completed, curing paper shall be removed and waxed floors cleaned of protective wax coating.
3. Forms containing concrete, top of concrete between forms, and exposed concrete surfaces after removal of forms shall be maintained in a thoroughly wet condition for at least 7 consecutive days after placing.
4. If weather is hot or surface has dried out, spray surface of concrete slabs and paving with fine mist of water, starting not later than 2 hours after final troweling and continuing until sunset. Surface of finish shall be kept continuously wet until curing medium has been installed.
5. Immediately after finishing, roof slabs and monolithic floor finish to receive resilient floor covering shall be uniformly and completely coated with liquid curing compound.

a. Install compound in a manner and quantity sufficient to produce a uniform continuous thin film of water-impervious membrane. Compound shall be installed in accordance with manufacturer's directions.

b. Protect adjoining surfaces from damage during installation. If curing compound is not applied immediately, cover finished concrete with wet burlap or curing paper and keep concrete surface wet for a period not to exceed thirty hours following finishing of concrete. At end of that time, burlap or paper shall be removed and curing compound installed as specified above.

c. Immediately after finishing, monolithic floor slabs not scheduled to receive resilient floor covering shall be covered with curing paper. Paper shall be lapped 3 inches at joints and sealed with waterproof sealer. Edges shall be cemented to finish. Repair or replace paper damaged during construction operations.

d. Within 24 hours after finishing, exterior slabs and paving, and interior slabs to receive cement topping or mortar setting beds, shall be covered with sand to a depth of 2 inches and kept thoroughly wet for 7 days.

1) Instead of sand covering, exterior walks and paving where no other surface treatment is specified, may be cured with clear liquid curing compound immediately installed in accordance with manufacturer's directions.

E. Filling, Leveling and Patching:

1. Concrete slabs exhibiting high or low spots and indicated to receive resilient floor covering or soft floor covering, shall have surfaces repaired. High spots shall be honed, or ground with power-driven machines to required tolerances. Low spots shall be filled with latex underlayment, installed in strict accordance with manufacturer's written recommendations.

2. Holes resulting from form ties or sleeve nuts shall be solidly packed, through exterior walls, by pressure grouting with cement grout, as specified. Grouted holes on exposed surfaces shall be screeded flush and finished to match adjoining surfaces.

F. Cement Base: Cement base shall be of the height, thickness, and shape detailed. Base shall be reinforced with one inch mesh, 18 gage, zinc-coated wire fabric. Base finish mixture shall be one part Portland cement, 2 parts of fine aggregate and one part pea gravel. Colored cement base shall include a chemically inert mineral oxide pigment in the mix.

3.4 FINISHING

A. Soda and Acid Wash: Concrete surfaces to receive plaster, paint or other finish, and which have been formed by oil coated forms, shall be scrubbed with a solution of 1-1/2 pounds of caustic soda to one gallon of water. Surfaces where smooth wood or waste molds have been furnished shall be scrubbed with a solution of 20 percent muriatic acid. Wash with clean water after scrubbing.

B. Sacking: Exposed concrete curbs, walls, and other surfaces shall be sacked by an application of Portland cement grout, floated, and rubbed. Sacking shall not be performed until patching and filling of holes has been completed. Entire sacking operation for any continuous area shall be started and completed within the same day.

1. Mix one part Portland cement and 1-1/2 parts fine sand with sufficient water to produce a grout having consistency of thick paint. Wet surface of concrete sufficiently to prevent absorption of water from grout. Apply grout uniformly with a brush or spray gun, then immediately float surface with a cork or other suitable float, scouring wall vigorously.
2. While grout is still plastic, finish surface with a sponge-rubber float, removing excess grout. Allow surface to dry thoroughly, then rub vigorously with dry burlap to completely remove dried grout. No visible film or grout shall remain after rubbing with burlap.

C. Sandblasting: Exterior concrete surfaces to receive stucco dash coat finish, where plywood or other smooth forms have been furnished, shall be uniformly sand-blasted with sharp quartz sand under sufficient air pressure to remove dirt, form oil and other foreign materials, and roughen surface to provide a proper bond. Such surfaces shall be thoroughly washed with clean water after sandblasting.

D. Abrasive: Concrete stair treads, landings, ramps and steps on interior and exterior of buildings, and interior exposed concrete floors in shop buildings shall receive an abrasive finish. Abrasive grains in amount of 30 pounds per 100 square feet shall be evenly installed by dust-on method and embedded into surface during first troweling operation. Additional abrasive grains, in amount of 30 pounds per 100 square feet, shall then be evenly installed and embedded into surface during final troweling operation.

E. Floor Hardener: Exposed interior concrete floors throughout shall be treated with floor hardener, as specified. Install hardener after surface of concrete has reached the point where no excess moisture is present, but while it is still plastic. Hardener shall be installed as follows:

1. Colored Hardener: Install at rate of 40 pounds per 100 square feet of surface for initial application.
2. Gray (natural) Hardener: Install at rate of 20 pounds per 100 square feet of surface for initial application.
3. Hardener shall be evenly distributed and thoroughly floated into surface mortar with a wood float. An additional 20 pounds of hardener, colored or gray, specified as above, shall be installed over each 100 square feet, and troweled to an even surface having uniform color and texture.

F. Cement Grout and Dry-Pack Concrete: Cement grout shall be mixed at the Project site and shall be composed of one volume of Portland cement and 2-1/2 volumes of fine aggregate. Materials shall be mixed dry with sufficient water added to make mixture flow under its own weight. When grout is used as a dry pack concrete, add sufficient water to provide a stiff mixture, which can be molded into a sphere.

G. Broom Finish: Exterior stair treads and landings shall be provided with a non-slip broom finish in addition to abrasive finish specified.

H. Abrasive Stair Nosing: Nosing shall be installed according to manufacturers written recommendations.

3.5 EXPANSION AND CONSTRUCTION JOINTS

A. Construction Joints: Details and proposed location of construction joints shall be as indicated on the Drawings, located to least impair strength of structure, in accordance with the following:

1. Thoroughly clean contact surface by sand blasting entire surface not earlier than 5 days after initial placement.

2. A mix containing same proportion of sand and cement provided in concrete plus a maximum of 50 percent of coarse aggregate shall be placed to a depth of at least one inch on horizontal joints. Vertical joints shall be wetted and coated with a neat cement grout immediately before placing of new concrete.

3. Should contact surface become coated with earth, sawdust, or deleterious material of any kind after being cleaned, entire surface shall be re-cleaned before applying mix.

B. Expansion Joints: Provide expansion joints where indicated in walks and exterior slabs. Space approximately 20 feet apart, unless otherwise indicated. Joints shall extend entirely through slab with joint filler in one piece for width of walk or slab. Joint filler shall be 3/8 inch thick, unless otherwise indicated.

C. Tooled Joints: Slabs, walks and paving shall be marked into areas as indicated with markings made with a V-grooving tool. Marks shall be round-edged, free from burrs or obstructions, with clean cut angles and shall be straight and true. Walks, if not indicated, shall be marked off into rectangles of not more than 12 square feet and shall have a center marking where more than 5 feet wide.

3.6 TESTING

A. Molded Cylinder Tests:

1. Owner Consultant will prepare cylinders. Each cylinder shall be dated, given a number, point in structure from which sample was obtained, mix design number, mix design strength and result of accompanying slump test noted.

2. Separate tests of molded concrete cylinders obtained at same place and time shall be made at age of 3 days, 7 days, and 28 days. A strength test shall be the average of the compressive strength of 2 cylinders, obtained from the same sample of concrete and tested at 28 days or at test age designated for determination of f'c.

3. Test cylinders shall be prepared at the Project site and stored in testing laboratory in accordance with ASTM C 31, and tested in accordance with ASTM C 39.

B. Core Test: At request of the Architect, cores of hardened concrete shall be cut from portions of hydrated structures for testing, in accordance with CBC and ASTM C 42.

1. Provide 4 inch diameter cores at representative places throughout the structure as designated by the Architect.
2. In general, provide sufficient cores to represent concrete placed with at least one core for each 4,000 square feet of building area, and at least 3 cores total for each Project.
3. Where cores have been removed, fill voids with drypack, and patch the finish to match the adjacent existing surfaces.

C. Concrete Consistency: Measure consistency according to ASTM C 143. Test twice each day or partial day's run of the mixer.

D. Adjustment of Mix: If the strength of any grade of concrete for any portion of Work, as indicated by molded test cylinders, fall below minimum 28 days compressive strength specified or indicated, adjust mix design for remaining portion of construction so that resulting concrete meets minimum strength requirements.

E. Defective Concrete:

1. Should strength of any grade of concrete, for any portion of Work indicated by tests of molded cylinders and core tests, fall below minimum 28 days strength specified or indicated, concrete will be deemed defective Work and shall be replaced or adequately strengthened in a manner acceptable to the Architect and DSA.
2. Concrete Work that is not formed as indicated, is not true within 1/250 of span, not true to intended alignment, not plumb or level where so intended, not true to intended grades and levels, contains sawdust shavings, wood or embedded debris, or does not fully conform to Contract provisions, shall be deemed to be defective Work and shall be removed and replaced.

F. Concrete for Equipment Pads, Mechanical and Electrical Work: Unless otherwise indicated, strength shall be 3,000 psi concrete. Exposed concrete shall be provided with a hand trowel finish with radius corners and edges. Form and place concrete where necessary as described in Section 30 10 00: Concrete Forms and Accessories, and reinforced as described in Section 03 20 00: Concrete Reinforcement. Calcium chloride shall not be furnished in any concrete mix provided for the installation of underground electrical conduits. For concrete encasement of more than one conduit, furnish 3/4 inch to 1 inch aggregate as specified for concrete mix.

3.7 CLEAN UP

A. Remove rubbish, debris and waste materials and legally dispose of off the Project site.

3.8 PROTECTION

A. Protect the Work of this section until Substantial Completion.

END OF SECTION

SECTION 03 35 15

SEALED CONCRETE FLOORING

PART 1 - GENERAL

1.1 SUMMARY

A. Section Includes: Provide applied curing, hardener, sealer type curing compound to concrete flooring including preparation of concrete as required for complete installation.

1.2 ADMINISTRATIVE REQUIREMENTS

A. Pre-Installation Meeting: Convene not less than one week prior to commencing applying hardener sealer at areas indicated to have a hardener sealed finish.

1. Require attendance of those directly affecting work of this Section.

2. Review concrete installation and coordinate required preparation.

1.3 SUBMITTALS

A. Product Data: Furnish manufacturer's literature for each type of material involved in curing, hardener, sealer for concrete.

B. Samples: Furnish sample panels of concrete with curing, hardener, sealer applied to half of surface; indicate which half has hardener sealer.

C. Maintenance Instructions: Provide written instructions for recommended periodic maintenance.

1.4 QUALITY ASSURANCE

A. Curing, Hardener, Sealer Installers: Firms with not less than five years successful experience applying specified curing, hardener, sealer and acceptable to system manufacturer.

B. Mock-Up: Erect minimum 100 square feet of concrete flooring with curing, hardener, sealer at location as approved. Approved mock-up may be incorporated into Project.

PART 2 - PRODUCTS

2.1 SYSTEM MANUFACTURERS

A. Nox-Crete Products Group (800.669.2738).

B. W.R. Meadows, Inc. (800.342.5976).

C. PROSOCO, Inc. (800.255.4255).

D. Substitutions: Refer to Section 01 25 00.

2.2 MATERIALS

A. System Description: Provide applied curing, hardener, sealer to concrete flooring.

B. Regulatory Requirements, VOC Emissions: Comply with applicable limitations for volatile organic compound (VOC) emissions for concrete sealing materials.

C. Accessibility Regulatory Requirements: Provide for assuring access for persons with disabilities in accordance with state and federal regulations for slip resistance.

1. California Regulations: Comply with California Building Standards Code.

2. Federal Regulations: Comply with Americans with Disabilities Act (ADA) Standards.

3. Slip-Resistant Hard Surfaces: Hard surface finishes to comply with requirements of authorities having jurisdiction for slip-resistant hard surfaces, including general code requirements and requirements for access for persons with disabilities.

D. Hardener, Sealer, Densifier: Provide water borne penetrating lithium silicate system designated by system manufacturer as hardener, sealer, densifier.

1. Basis of Design: Nox-Crete Products Group/Duro-Nox LS.

2. Basis of Design: W. R. Meadows, Inc./Liqui-Hard Ultra.

PART 3 - EXECUTION

3.1 EXAMINATION

A. Ensure surfaces to receive hardener sealer are clean and well cured.

B. Do not commence work until surface conditions are within tolerances required for proper finishing based on manufacturer recommendations.

C. Start of work indicates acceptance of conditions.

3.2 PREPARATION

A. Clean concrete slab free from foreign matter and prepare concrete for sealing in accordance with system manufacturer recommendations.

3.3 INSTALLATION

A. Comply with curing, hardener, sealer manufacturer recommendations and application instructions for application of concrete hardener sealer densifier as required to match approved samples and mock-up.

3.4 PROTECTION

A. Comply with system manufacturer recommendations for protecting floors until ready for use. Keep surface dry for minimum 48 hours after application.

B. Do not permit traffic on floors with curing, hardener, sealer for at least 72 hours.

C. Protect floors with curing, hardener, sealer until Substantial Completion.

END OF SECTION

SECTION 04 22 00

CONCRETE MASONRY UNITS

PART 1 - GENERAL

1.1 SUMMARY

A. Section Includes:

1. Concrete masonry units.
2. Reinforcing steel.
3. Mortar, grout and grouting.
4. Bolts, anchors, hardware, metal frames, and other insert items.

B. Related Sections:

1. Section 01 45 33 - Code-Required Special Inspections.
2. Section 03 10 00 - Concrete Forming and Accessories.
3. Section 03 20 00 - Concrete Reinforcing.
4. Section 03 30 00 - Cast-in-Place Concrete.

1.2 SUBMITTALS

A. Mix Design: Submit grouting mix design.

B. Product Data: Submit manufacturer's Product Data for assembly components, materials, and accessories.

C. Samples: Submit Samples for each type of required masonry unit, including reinforcement and accessories.

1.3 QUALITY ASSURANCE

A. Perform the Work in accordance with CBC, Chapter 21A. Refer to Section 01 45 33 - Code-Required Special Inspections.

B. Comply with requirements of TMS 602/ACI 530.1/ASCE 6.

C. Concrete Masonry Units: Sample and test in accordance with ASTM C 140.

1. Notify the testing laboratory a minimum of 45 days in advance of installing concrete unit masonry, to allow for testing of the units for compression, shrinkage, and absorption. Absorption test requires 40 days.
2. The retained material testing laboratory shall receive five concrete masonry units per test from masonry unit manufacturer, as designed or specified by the Architect, and shall perform and send required test results to the Architect and inspector.

D. Portland Cement: Obtain sample and test in accordance with ASTM C 150.

E. Mortar: Obtain sample and test in accordance with ASTM C 780.

F. Grout: Obtain sample and test in accordance with ASTM C 404.

G. Compressive Tests: Obtain sample and test to verify compliance with the following minimum values:
   1. Mortar: At least 800 psi at 7 days and 1,800 psi at 28 days.
   2. Grout: At least 1,200 psi at 7 days and 2,000 psi at 28 days.
   3. Do not test 28-day specimen when 7-day tests exceed 28-day requirements.

H. Inspection During Installation: Inspector will continuously observe the installation of reinforced masonry.

I. The Owner will be responsible for the costs of original tests and inspection.

J. If core testing is required by DSA, masonry removed by coring operations shall be replaced to match adjoining Work. Core testing shall conform with CBC, Chapter 21A.

1.4 DELIVERY, STORAGE AND HANDLING

A. Store units above grade on level platforms to allow air circulation under stacked units.

B. Cover and protect against wetting before installation.

C. Handle units on pallets or flatbed barrows. Free discharge from conveyor units or transportation in mortar trays is not permitted.

PART 2 - PRODUCTS

2.1 MATERIALS

A. Concrete Unit Masonry: Modular medium weight conforming to ASTM C 90, hollow load-bearing concrete unit masonry.
   1. Provide open-end units at walls to be grouted.
   2. Provide closed-end units at walls and at openings where ends will be exposed in finish Work; provide bond beam blocks where horizontal reinforcing is indicated.
   3. Provide special shapes and accessory units at locations indicated on Drawings.
   4. Except as otherwise specified, provide units in standard gray color.
   5. Masonry unit shall have been cured for a minimum of 28 days.
   6. Masonry unit shall have maximum linear shrinkage or 0.065 percent from saturated to oven dry.

B. Portland Cement: ASTM C 150, Type II, from one source.

C. Mortar: ASTM C 270.

D. Grout: ASTM C 476.

E. Hydrated Lime: ASTM C 207, Type S.

F. Admixture for Grout: Grout Aid Type 2, complying with DSA requirements; as manufactured by Sika Chemical Corp. Refer to Section 01 45 23: Testing and Inspection.

G. Water: Potable and fresh.

H. Cleaning Materials: Shure Klean No. 600 detergent by ProSoCo.

I. Miscellaneous Materials: As required to complete the Work.

J. Sampling and Testing of Mortar: Refer to Section 01 45 23: Testing and Inspection.

PART 3 - EXECUTION

3.1 EXAMINATION

A. Discard units with cracked faces, chipped surfaces, or other defects not complying with requirements of ASTM C 216.

3.2 MORTAR AND GROUT MIXING

A. Mortar: Dry, loose volumes. Mix proportions shall be verified by material testing laboratory.

1. Portland Cement: 1 part.
2. Hydrated lime: 1/4 to 1/2 part.
3. Mortar sand: 2-1/4 to 3 parts.
4. Water: to provide required consistency.
5. Mixing time for Silotec Mortar System shall be in accordance with Silotec Mortar System recommendations instead of those indicated in Section 01 45 23: Testing and Inspection.

B. Grout: Shall provide a minimum strength of 2000 psi unless noted otherwise. Grout strengths in excess of more than 2000 psi shall be verified by a material testing laboratory.

1. Fine Grout: Portland Cement 1 part; sand 2 ¼ to 3 parts; water to attain a slump of 8 to 10 inches.
2. Coarse Grout: Portland Cement 1 part; pea gravel 2 ¼ to 3 parts; water to attain a slump of 8 to 10 inches.

C. Measurements: Proportion by accurate volume measurements. Measure in calibrated devices that can be checked at any time.

1. Add water for workable consistency.
2. Shovel measurements are not permitted.

D. Mixing: Place sand, cement, and water in mixer in that order, while mixer is running; mix for 3 minutes, add lime, and admixture (for grout), and continue mixing until a uniform mass is provided, but in no case less than 10 minutes.

1. Equipment for mixing and handling mortar and grout shall be acceptable to DSA.
2. Batches of less than one sack of cement, and fractional sack batches are not permitted.

E. Re-tempering Time Limit: Re-temper on mortar boards, for at least 3 minutes, but not more than 10 minutes when required, by adding water into a basin formed by mortar, and installing mortar into it. Dashing, or pouring of water over mortar is not permitted.

1. Do not re-temper mortar which has become hard or non-plastic.
2. Discard mortar, which has not been installed within one hour after original mixing.
3. Ready-Mix Grout: Grout batched off the Project site and delivered by mixer truck shall be subject to same procedures and controls as prescribed by DSA building code requirements. Refer to Section 01 45 33 - Code-Required Special Inspections.

3.3 INSTALLATION OF MASONRY UNITS

A. Workmanship: Install masonry plumb and true to line with straight level joints of uniform thickness. Maintain masonry clean during and after installation.

1. Lay-out and incorporate embedded hardware items.
2. Assist other trades with built-in items, which require cutting and fitting of masonry.
3. Cut block units with a diamond saw or carborundum wheel. Trowel or chisel cutting is not permitted.
4. Keep cavities clear of droppings and debris. Remove promptly.

B. Reinforcing Steel: Install as indicated on Drawings. Except as otherwise indicated, install reinforcement in accordance with standards of Concrete Reinforcing Steel Institute and to requirements specified in Section 03 20 00 - Concrete Reinforcing. Do not splice vertical reinforcing except where indicated on the Drawings.

C. Shoring: Provide temporary shoring for lintels with sufficient strength to carry load without deflecting. Remove temporary shoring 28 days after masonry has been installed.

D. Block Installation: Clean dirt and dust from surfaces before installation. Do not wet masonry units except in very dry weather.

1. Foundation preparation: Sandblast tops of concrete starting surfaces, wash-off by high pressure water jet, and slurry coat surfaces with neat cement grout for bond to masonry.
2. Install masonry with mortar to required joint thickness. Install blocks with 3/8-inch mortar bed on entire horizontal surface. Fill head joints solid, install tightly to adjoining units. Provide 3/8-inch joint thickness.
    a. Hold racking to a minimum.
    b. No toothing is permitted.
    c. If it becomes necessary to move a unit after it has been installed, remove the unit, discard the mortar, and install the unit in fresh mortar.
3. Anchor Bolts: Provide one-inch minimum grout space around protruding bolts.
4. Bond: Unless otherwise indicated, install units in common running bond.

5. Finish Joint Treatment: Unless otherwise indicated, cut both interior and exterior joints flush, and tool slightly concave to a dense, uniform surface.
6. Grouting: Unless noted otherwise on Drawings, completely fill cells with grout.

E. Steel Door Frames:

1. Locate doorframes accurately, install plumb, "Ram-set" or "Rawlplug" to floor surface and brace in position before start of masonry installation.
   a. Frames are specified to be furnished with adjustable anchors.
   b. Fill interior of frames solid with mortar or grout as walls are constructed.
2. Provide temporary wood spreaders from jamb to jamb and from head to floor to ensure that jambs do not bow-in, distort from a straight line, or deflect from superimposed loads during construction.

3.4 LOW-LIFT GROUTING FOR HOLLOW MASONRY UNITS

A. After mortar joints have set, cores are cleaned of mortar and debris, and reinforcing is installed and inspected, grout cells in 2 feet maximum lifts, providing specified pea gravel grout mix. Refer to Section 01 45 23: Testing and Inspection.

B. Grouted walls shall be solid and without voids.

C. Grout may be installed by pump, tremie or bucket, using hoppers to avoid spilling on exposed surfaces.

D. Place an initial 2 feet high lift around, thoroughly compact, then place balance of each lift, compacting again through total lift, with hardwood spading sticks or pencil vibrators.

E. Stop grout pours 1-1/2 inches below top of each lift.

F. Remove and discard spilled grout from upper units before grout can harden.

G. Bracing: Adequately brace walls against wind and other forces during and after construction.

H. Re-puddle top of grout after initial set.

3.5 HIGH-LIFT GROUTING OPTION FOR HOLLOW MASONRY UNITS

A. High-lift grouting method is permitted provided following qualifications and requirements are met. High-lift grouting shall apply only to cell sizes available with 8 inch and wider block units. This method is subject to approval of DSA.

B. Provide bond beam units, inverted for start course, and omit alternate blocks or cut openings in alternate face shell on bottom course for cleanouts.

C. Remove projecting mortar fins. Wash out every cell thoroughly using a water jet, which has sufficient force to remove mortar from the interior of the cells, and from reinforcing steel.

D. Plug each cleanout by setting a "soap" in mortar into opening and securely bracing it in place to prevent displacement. If masonry is not exposed in finish Work, cleanouts may be formed.

E. Grouting:

1. Grout masonry cells solid, free from voids.
2. Do not install grout until masonry has set a minimum of 3 days in warm weather (50 degrees to 85 degrees F.) or 5 days in cool, damp weather (35 degrees to 50 degrees F.).
3. Pump grout into grout cell space as rapidly as practical. Discard grout not in place within one hour after water was first added to batch.
4. Install grout with maximum slump without segregation. Place in a continuous pour, in maximum lifts of 4 feet, with approximately 20 minutes elapsed time between any 2 successive lifts.

F. Consolidating:

1. Consolidate and reconsolidate grout using 3/4 inch lightweight flexible cable vibrators.
2. First consolidation shall be performed to bottom of lift immediately after placement, and in case of subsequent lifts, through previously placed lift.
3. Top lift shall be reconsolidated no sooner than 30 minutes after grout has been installed.
4. Vibrating of reinforcing steel is not permitted.

G. Bracing: Adequately brace walls against wind and other forces during and after construction.

3.6 CURING

A. Remove efflorescence, stains, debris, excess grout, and foreign matter.

B. During curing, or for any other purpose, do not saturate masonry with water.

C. For low-humidity conditions, dampen the wall surface with a very light fog spray continuously for 3 days to cure mortar in joints.

3.7 PARGE COAT

A. Apply parge coat to the earth side of surfaces that are to receive waterproofing.

B. A Portland cement and sand mix (1:3.5 by volume), or Type M or S mortar may be used for the parge coat.

C. Parging should be applied to damp (not saturated) concrete masonry in two ¼” (6mm) thick layers. The first coat should be roughened when partially set, hardened for 24 hours, and then moistened before second coat is applied. The second coat should be troweled to a smooth, dense surface.

D. The parge coat should be beveled at the top to form a wash, and thickened at the bottom to form a cove between the base of the wall and the top of footing.

3.8 CLEANING

A. At completion of masonry Work, remove misplaced mortar, grout or other foreign substances, and clean surfaces which will be exposed in finish Work with specified cleaner, or with clean water and stiff fiber brushes.

B. Remove rubbish, debris, and waste materials and legally dispose of off the Project site.

3.9 PROTECTION

A. Protect the Work of this section until Substantial Completion.

END OF SECTION

SECTION 04 22 70

WATERPROOF CONCRETE UNIT MASONRY

PART 1 - GENERAL

1.1 SUMMARY

A. Section Includes: Provide waterproof concrete masonry unit construction, with integral waterproofing, mortar, reinforcement, anchorage, surface sealer and accessories as required for complete installation.

1. Cut and fit concrete masonry for work of other trades.

2. Integral Waterproofing: Provide integral water-repellent admixtures for both concrete masonry units and mortar at all exterior wall conditions.

3. Sealer: Provide penetrating type surface sealer for exterior exposed surfaces of concrete masonry assemblies; system compatible with integral waterproofing.

B. Work Installed not Furnished: Build in items supplied by other trades and suppliers.

1.2 ADMINISTRATIVE REQUIREMENTS

A. Pre-Installation Meeting: Convene not less than one week prior to commencing work of this section. Require attendance of parties directly affecting work of this section.

1. Review installation procedures and coordination required with related work.

1.3 SUBMITTALS

A. Product Data: Furnish manufacturer's certificate concrete masonry units conform to specified standards.

B. Shop Drawings: Furnish drawings for reinforcing; show bar schedules, diagrams of bent bars, ties and arrangements and assemblies.

C. Samples: Furnish section of exposed concrete masonry face indicating texture and color along with each type of colored mortar.

D. Certificates: Furnish integral waterproofing manufacturer certification indicating materials are appropriate for applications indicated, as compatible with materials involved in Project, and masonry manufacturer is trained in proper use of materials.

1.4 QUALITY ASSURANCE

A. Mock-Up: Provide minimum 4'-0" by 6'-0" sample panel of concrete masonry construction, clearly indicating joints and methods of reinforcing. Erect mock-up at Project Site, in location as approved by Architect.

1. Approved mock-up will be used for quality control as minimum standard of work acceptable for Project.

2. Approved mock-up may be incorporated into Project.

1.5 SITE CONDITIONS

A. Temperature: Maintain materials to minimum 50 degrees F prior to, during and 48 hours after completion of masonry work.

1. Do not place masonry units when air temperature is below 40 degrees F.

2. During colder weather, work may continue where equipment is used to maintain constant temperature above 40 degrees F and masonry work completed and in progress is kept covered.

3. Protect masonry construction from direct wind and sun exposure when temperatures exceed 99 degrees F and relative humidity is less than 50 percent.

B. Bracing: Provide temporary bracing during erection of masonry work, maintain in place until building structure provides permanent bracing.

PART 2 - PRODUCTS

2.1 MATERIALS

A. System Description Includes: Provide concrete masonry unit construction, with integral waterproofing, mortar, reinforcement, anchorage, surface sealer, and accessories.

B. Regulatory Requirements: Perform concrete unit masonry work in accordance with requirements of California Building Standards Code except where more restrictive requirements are specified.

1. Fire Rated Materials: Provide materials and systems which have passed ASTM E119 tests and are approved for fire ratings indicated on Drawings.

C. Concrete Masonry Units: Hollow loadbearing units conforming to ASTM C90.

1. Concrete Masonry Manufacturers:

a. Angelus Block, Co., Inc.
b. Basalite Concrete Products.
c. Orco Block Co., Inc.
d. RCP Block and Brick, Inc.
e. Substitutions: Refer to Section 01 25 00.

2. Weight: Provide normal, medium, or light weight units unless specific weight classification is indicated.

a. Normal Weight, 125 pcf or more.
b. Medium Weight, 105 to 125 pcf.
c. Light Weight, less than 105 pcf.

3. Compressive Strength: Comply with ASTM C90, with minimum 800 psi per unit and minimum average of 1000 psi for three units, when tested in accordance with ASTM C140.

4. Size: Nominal 8" by 16" face measurement with thickness as indicated on Drawings.

5. Exposed Face Surfaces: Dense with uniform texture and color throughout Project.

6. Exposed Face Surfaces: Dense with finish as approved by Architect prior to manufacturing; uniform texture and color throughout Project.

    a. Texture: precision (smooth) as indicated on Drawings.

    b. Finish: Post installation sandblasting as indicated on drawings.

    c. Colors: Integral color as indicated, as directed on drawings.

7. Special Shapes: Provide proper specially shaped units for bond beams, lintels, corners and jambs.

    a. Exposed Special Shapes: Design bond beams, lintels, corners and jambs and fillers to match and compliment block units; where required perform cutting with masonry saw.

8. Integral Waterproofing Admixture System at Exterior Wall Conditions: System of integral water-repellent admixtures, liquid polymeric admixture mixed with concrete during production.

    a. Manufacturers:

        1) W.R. Grace & Co., Masonry Products Div./Dry-Block System.
        2) Specon, Inc./Hydro System.
        3) Acme-Hardesty/Acme-Shield.
        4) Substitutions: Refer to Section 01 25 00.

    b. Wind Driven Rain Permeance: Class E, ASTM E514.

D. Mortar: Conform to ASTM C270, Type S.

1. Masonry Cement/Premix Mortar: Acceptable only if manufacturer certifies product is made of cement and lime, with no limestone or pulverized material used in lieu of hydrated lime.

E. Grout: Conform to ASTM C476; minimum compressive strength 2,000 psi.

F. Mortar and Grout Materials:

1. Portland Cement: ASTM C150, Type I.

2. Hydrated Lime: ASTM C207, Type S.

3. Aggregates: Standard masonry mortar and grout type; clean, dry and protected against dampness, freezing and foreign matter.

    a. Mortar Aggregates: Conform to ASTM C144.
    b. Grout Aggregates: Conform to ASTM C404.

4. Water: Clean, drinkable, free of injurious amounts of oil, alkali, organic matter or other harmful materials.

5. Integral Waterproofing Mortar Admixture System at Exterior Wall Conditions: System of integral water-repellent admixtures, liquid polymeric admixture mixed with concrete during production.

    a. Manufacturers:

        1) W.R. Grace & Co., Masonry Products Div./Dry-Block System.
        2) Specon, Inc./Hydro System.
        3) Acme-Hardesty/Acme-Shield.
        4) Substitutions: Refer to Section 01630.

    b. Wind Driven Rain Permeance: Class E, ASTM E514.

    c. Mortar Admixture: Materials shall not reduce flexural nor compressive strength of mortar when tested in accordance with ASTM C780 and ASTM C1072.

    d. Mix in integral waterproofing in strict accordance with material manufacturer recommendations to assure specified permeability performance.

6. Exposed Mortar Colors: Integral color as indicated, as directed by Architect where not otherwise indicated.

G. Color Admixtures: Pure mineral oxide colors conforming to ASTM C979 as required for approved colors.

1. Colors: Where color is not indicated on Drawings or Finish Schedule, provide custom color as directed by Architect.

H. Reinforcement and Anchorages: Provide reinforcing and anchorages as indicated on Drawings.

1. Deformed Bars: ASTM A615, Grade 60 for bars No. 3 and larger, unless otherwise indicated.

2. Plain Bars: ASTM A675, Grade 80 for No. 2 bars, unless otherwise indicated.

3. Joint Reinforcement: ASTM A82, free from mill scale and excess or loose rust deposits.

I. Control Joints: Closed cell neoprene or PVC factory fabricated solid sections, resistant to oils and solvents, flexible at temperatures from 40-degree F after five hours exposure; ASTM D2240 minimum durometer 70.

J. Surface Sealer: Penetrating sealer recommended by integral waterproofing manufacturer for application to concrete masonry systems using integral waterproofing.

1. Apply at exposed face, exterior conditions.

PART 3 - EXECUTION

3.1 PREPARATION

A. Supply metal anchors required for concrete masonry to appropriate trades for placement; provide in quantities required for Project and direct placement.

1. Ensure items built in by other trades are properly located and sized.

B. Establish lines, levels and coursing, protect from disturbance.

C. Clean surfaces to receive masonry free from dirt, debris, and laitance.

3.2 INSTALLATION

A. Do not wet concrete masonry units; lay units in mortar with full bed and head joints, properly jointed with other work.

1. Fully bond corners and intersections.

2. Align cells of units to maintain clear, unobstructed space for reinforcing and grout, keep cells free of mortar and debris.

3. Comply with integral waterproofing system manufacturer for installation of concrete masonry with integral waterproofing and for mortar and grout with integral waterproofing for complete watertight concrete masonry assembly.

B. Do not shift or tap masonry units after mortar has taken initial set, where adjustment must be made, remove mortar and replace.

C. Buttering corners of joints and deep or excessive furrowing of mortar joints is not acceptable.

D. Perform job site cutting with proper power tools to provide straight, true, unchipped edges.

E. Provide structural anchorage or retention in accordance with applicable code requirements.

F. Ensure masonry courses are of uniform height, make vertical and horizontal joints equal and of uniform thickness.

1. Lay concrete unit masonry in running bond.

2. Course one block unit and one mortar joint to equal 8".

G. Remove excess mortar and projections, take care to prevent breaking block corners.

H. Tolerances:

1. Maximum allowable variation from masonry unit to adjacent masonry unit is 1/32" where masonry units are exposed in finished construction and where waterproofing is applied over masonry units.

2. Maximum allowable variation from plane of wall is 1/4" in 10 feet, and maximum 1/2" in 20 feet or more.

3. Maximum allowable variation from plumb is 1/4" per story, non-cumulative, and maximum 1/2" in two or more stories.

4. Maximum allowable variation of level coursing is 1/8" in 3 feet, 1/4" in 10 feet and 1/2" in 30 feet.

I. Mortar Joints: Compress joints with a round or curved metal tool.

1. Compress mortar joints with jointing tool with minimum diameter three times width of mortar joint, to provide a flush surface where resilient base or waterproofing is to be applied over masonry.

J. Reinforcement and Anchorage: Fully reinforce corners and intersections. Lap splices minimum 6". Extend splices minimum 16" each side of openings.

1. Support and secure reinforcing bars to maintain within 1/2" of dimensioned position.

2. Retain vertical reinforcement in position at top and bottom of cells and at intervals not to exceed 192 bar diameters.

K. Lintels: Provide reinforced concrete masonry unit lintels over openings where steel lintels are not scheduled.

1. Use full length reinforcing bars.

L. Grouting: Place grout when concrete masonry units are surface dry; consolidate and reconsolidate by mechanical vibration.

1. Fine Grout: Use for spaces less than 2" in width using low lift grouting techniques.

2. Coarse Grout: Use for spaces 2" or more in width.

3. When grouting is stopped for more than one hour, terminate grout approximately 2" below top of upper masonry unit to form positive key for subsequent grout placement.

4. Low-Lift Grouting: Place first lift of grout at 16" and place subsequent lifts at 8" increments.

5. Hi-Lift Grouting: Use only where specifically approved by Architect and only where grout spaces are 3" or greater in width.

    a. Provide minimum 4" high cleanouts at bottom of each cell to be grouted, clean out cells and inspect prior to grouting.

    b. Pump grout into cells with maximum 48" lifts.

M. Built-In Work: As work progresses, build in frames, lintels, nailing strips, anchor bolts, plates, and other items supplied by other trades.

1. Build in items plumb and true.

2. Do not build in organic materials which will be subject to rot or deterioration.

3. Bed anchors of frames in mortar joints; fill frame voids solid with mortar; fill masonry cores with grout minimum 12" from framed openings.

N. Cutting and Fitting: Cut and fit for chases, pipes, conduit, sleeves, and grounds; coordinate with work of other Specification sections to ensure correct size, shape and location.

3.3 CLEANING

A. Remove excess mortar and smears upon completion of masonry work.

B. Point or replace defective mortar, match adjacent work.

C. Clean soiled surfaces using a non-acidic solution which will not harm masonry or adjacent materials, consult masonry manufacturer for acceptable cleaners.

D. Use non-metallic tools in cleaning operations.

E. Sealer: Apply penetrating surface sealer in accordance with integral waterproofing manufacturer recommendations and application instructions for applications indicated.

3.4 PROTECTION

A. Maintain protective boards at exposed external corners which may be damaged by construction activities; protect without damaging completed work.

END OF SECTION

SECTION 05 12 00

STRUCTURAL STEEL FRAMING

PART 1 - GENERAL

1.1 SUMMARY

A. Section Includes:

1. Structural steel.

B. Related Sections:

1. Section 01 45 33 - Code-Required Special Inspections.
2. Section 03 30 00 - Cast-in-Place Concrete.
3. Section 05 31 00 - Steel Decking.
4. Section 05 50 00 - Metal Fabrications.
5. Section 09 91 13 - Exterior Painting.
6. Section 09 91 23 - Interior Painting.

1.2 REFERENCES

A. AISC – Steel Construction Manual:

1. AISC 360 Specifications for Structural Steel Buildings.
2. RCSC Specification for Structural Joints Using ASTM A325 or A490 Bolts.

AA. AISC 341 - Seismic Provisions for Structural Steel Buildings, including Supplements.

B. AISC S323 - Quality Criteria and Inspection Standards.

C. AISC - American Institute of Steel Construction, Code of Standard Practice for Steel Buildings and Bridges, for Architecturally Exposed Structural Steel.

D. ASTM A36 - Structural Steel.

E. ASTM A53 - Hot Dipped, Zinc-Coated Welded and Seamless Steel Pipe.

F. ASTM A108 - Standard Specification for Steel Bars, Carbon, Cold-Finish, Standard Quality.

G. ASTM A123 - Zinc (Hot Dipped Galvanized) Coatings on Iron and Steel Products.

H. ASTM A153 - Zinc Coating (Hot Dip) on Iron and Steel Hardware.

I. ASTM A307 - Carbon Steel Externally Threaded Standard Fasteners.

J. ASTM A325 - High Strength Bolts for Structural Steel Joints.

K. ASTM A500 - Cold Formed Welded and Seamless Carbon Steel Structural Tubing in Round and Shapes.

L. ASTM A572 - Grade 50 - Structural Steel.

M. ASTM A653 - Sheet Steel, Zinc-Coated (Galvanized) or Zinc-Iron Alloy Coated by the Hot-Dip Process.

N. ASTM A780 - Repair of Damaged and Uncoated Areas of Hot-Dip Galvanized Coatings.

O. ASTM A992 - Steel for Structural Shapes For Use in Building Framing.

P. ASTM C1107 - Packaged Dry, Hydraulic Cement Grout (Non-Shrink).

Q. ASTM F1554 - Standard Specification for Anchor Bolts.

R. AWS A2.4 - Standard Welding Symbols.

S. AWS D1.1 - Structural Welding Code.

SS. AWS D1.8 - Structural Welding Code – Seismic Supplement.

T. AWS WHB-1 - Qualification and Certification.

U. AWS A5.1 - Carbon Steel Covered Arc-Welding Electrodes.

V. CBC Chapter 22A, Division III - Allowable Stress Design and Plastic Design for Structural Steel Buildings.

W. SSPC - Steel Structures Painting Council, SP-2, Hand Tool Cleaning.

X. Federal Emergency Management Agency (FEMA)

1. FEMA 353 - Recommended Specification and Quality Assurance Guidelines for Steel Moment Frame Construction for Seismic Application, July 2000.

1.3 SYSTEM DESCRIPTION

A. Regulatory Requirements:

1. Structural steel shall conform to CBC requirements, except that steel manufactured by acid Bessemer process is not permitted for structural purposes.
2. Sheet and strip steel other than those listed in CBC, if provided for structural purpose, shall comply with DSA requirements.

1.4 SUBMITTALS

A. Shop Drawings:

1. Submit Shop Drawings, including complete details and schedules for fabrication and shop assembly of members, and details, schedules, procedures and diagrams showing the sequence of erection. Fully detail minor connections and fastenings not shown or specified in the Contract Documents to meet required conditions using similar detailing as shown in the Contract Documents. Include a fully detailed, well controlled sequence and technique plan for shop and field welding that minimizes locked in stresses and distortion; submit sequence and technique plan for review by the Architect.
   a. Include details of cuts, connections, camber, and holes in accordance with Figure 4.5 of AWS D1.1-02 or AISC Section J1.8, weld position plan and other pertinent data. Indicate welds by standard AWS symbols, and show size, length and type of each weld.
   b. Provide setting drawings, templates, and directions for installation of anchor bolts and other anchorages to be installed for Work specified in other section.
   c. Erection and Bracing Plan and Erection Procedure: Submit an erection and framing plan, including columns, beams, and girders, prepared, signed and sealed by a structural engineer registered in the State of California in accordance with Title 8 CCR, Section 1710. Maintain a copy at the Project site as required by the California Division of Industrial Safety.
   d. Submit a list of steel items to be galvanized.
2. Product Data:
   a. Submit copies of fabricator’s specifications and installation instructions for the following products. Include laboratory test reports and other data required demonstrating compliance with these Specifications:

1) Structural steel, each type; including certified copies of mill reports covering chemical and physical properties.
2) Welding electrodes.
3) Welding gas.
4) Unfinished bolts and nuts.
5) Structural steel primer paint.
6) High-strength bolts, including nuts and washers.

3. Manufacturer's Mill Certificate:
   a. Submit, certifying that products meet or exceed specified requirements.
4. Mill Test Reports:
   a. Submit manufacturer's certificates, indicating structural yield and tensile strength, destructive and non-destructive test analysis.
5. Charpy-V-Notch (CVN) Impact Test: Submit certified copies of Charpy-V-Notch (CVN) Impact Test by the manufacturer for applicable steel members and components.
   a. Charpy-V-Notch (CVN) Impact Test for Base Metal: hot rolled shapes with flanges 1_1/2 in. thick and thicker and plates 2 in. thick and thicker shall shall subjected to Charpy-V-Notch impact test in accordance with "Seismic Provisions for Structural Steel Buildings", Part A3.3
   b. Not used
   c. Charpy-V-Notch test shall be performed by the manufacturer employing Test Frequency (P) in accordance with ASTM A 673 and utilizing standard specimen sizes shown in Figure 6 of ASTM E 23. The absorbed energy in a CVN impact test shall not be less than that specified in "Seismic Provisions for Structural Steel Buildings", Part A3.3
6. Submit certified copies of tests by manufacturer for fine grain practice. Structural steel base material, as described above, shall be manufactured using fully killed fine grain practice having grain size number 5 or better as determined by ASTM E 112.
7. Weld Procedure Specifications (WPS): Submit weld procedures according to AWS D1.1 for each welded joint on project (whether prequalified or qualified by testing) to Owner's testing laboratory for approval. After approval by testing laboratory, submit to Architect for record. Weld procedures shall indicate joints details and tolerances, preheat and interpass temperature, post-heat treatment, single or multiple stringer passes, peening of stringer passes for groove welds except for the first and the last pass, electrode type and size, welding current, polarity and amperes and root treatment. The welding variables for each stringer pass shall be recorded and averaged, from these averages the weld heat input shall be calculated. Submit the manufacturer's product data sheet for all welding material used.
8. Welder's Certificates: Field welders shall be Project certified in accordance with AWS D1. 1-15. Shop welders shall be Project certified for FCAWS in accordance with AWS D1. 1-15.
9. Test Reports: Submit reports of tests conducted on shop and field welded and bolted connections. Include data on type of test conducted and test results.
10. Welding Material Certification: Comply with AWS D1.8 Section 1.22. Submit to Owner's testing laboratory.

1.5 QUALITY ASSURANCE

A. Comply with the following as a minimum requirement, except as otherwise indicated:
   1. American Institute of Steel Construction (AISC) “Code of Standard Practice for Steel Buildings and Bridges,
   2. Perform welding in accordance with AWS Standards, AWS D1.1, and California Building Code Section 1705A.2.5 and approved weld procedure.

B. Shop fabrication shall be inspected in accordance with CBC.

C. Erect mock-up panel of fabricated structural steel meeting Architecturally Exposed Structural Steel tolerances for exposed areas. Approval by Architect is required. Mock-up to remain for comparison but may not be left as part of the work.

1.6 DELIVERY, STORAGE AND HANDLING

A. Store structural steel above grade on platforms, skids or other supports.

B. Protect steel from corrosion.

C. Store welding electrodes in accordance with AWS D 12.1.

D. Store other materials in a weather-tight and dry place until installed into the Work.

PART 2 - PRODUCTS

2.1 GENERAL

A. Stock Materials: Provide exact materials, sections, shapes, thickness, sizes, weights, and details of construction indicated on Drawings. Changes because of material stock or shop practices will be considered if net area of shape or section is not reduced thereby, if material and structural properties are at least equivalent, and if overall dimensions are not exceeded.

2.2 MATERIALS

A. Structural Steel: All wide flange shapes shall conform to ASTM A992 Grade 50. Brace Frame Base Plate shall be ASTM A572 Grade 50. Other steel shall conform to ASTM A36.

B. Unfinished Threaded Fasteners: ASTM A307, Grade A, regular low carbon bolts and nuts.

C. High-Strength Threaded Fasteners: ASTM A325, ASTM A490 or ASTM F1852 quenched and tempered, steel bolts, nuts and washers.

D. Primer: Lead-free metal primer, Tnemec 10-99, Rust-Oleum X-60, or equal.

E. Steel Pipe: ASTM A53, Type E or S, Grade B.

F. Structural Tubing:
   1. Hot-formed, ASTM A501.
   2. Cold-formed, ASTM A500, Grade B.

G. Galvanizing: ASTM A123.

H. Welding Electrodes: Provide electrodes recommended by manufacturer for seismic connections.
   1. Comply with latest AISC Seismic Provision.

I. Shear stud connectors: ASTM A108, Grade 1015 forged steel, headed, uncoated, granular flux filled shear connector or anchor studs by Nelson Stud Welding Division of TRW, Lorain, OH, or equal.

J. Grout: ASTM C1107, non-shrink type, pre-mixed compound consisting of non-metallic aggregate, cement, water reducing and plasticizing additives, capable of developing a minimum compressive strength of 7,000 psi at 7 days; of consistency suitable for application and a 30 minute working time.

K. Threaded Rods: ASTM F1554, grade as noted per plan.

2.3 FABRICATION

A. Cleaning and Straightening Materials: Materials being fabricated shall be thoroughly cleaned of scale and rust, and straightened before fabrication. Cleaning and straightening methods shall not damage material. After punching or fabrication of component parts of a member, twists or bends shall be removed before parts are assembled.

B. Cutting, Punching, Drilling and Tapping: Unless otherwise indicated or specified, structural steel fabricator shall perform the cutting, punching, drilling and tapping of Work so that Work of other trades will properly connect to steel Work.

C. Milling: Compression joints depending on contact bearing shall be furnished with bearing surfaces prepared to a common plane by milling.

D. Use of Burning Torch: Oxygen cutting of members shall be performed by machine. Gouges greater than 3/16 inch that remain from cutting shall be removed by grinding. Reentrant corners shall be shaped notch free to a radius of at least 1/2 inch. Gas cutting of holes for bolts or rivets is not permitted.

E. Galvanizing: After fabrication, items indicated or specified to be galvanized shall be galvanized in largest practical sizes. Fabrication includes operations of shearing, punching, bending, forming, assembling or welding. Galvanized items shall be free from projections, barbs, or icicles resulting from the galvanizing process.

F. Welding:

1. Type of steel furnished in welded structures shall provide chemical properties suitable for welding as determined by chemical analysis. Welds shall conform to the requirements of CBC Chapter 17A. Conform to AWS D1.1 and D1.8, and CBC Chapter 22A.

2. Materials and workmanship shall conform to the requirements specified herein and to CBC requirements, modified as follows:

   a. No welded splices shall be permitted except those indicated on Drawings unless specifically reviewed by the Architect.

   b. Drawings will designate joints in which it is important that welding sequence and technique be controlled to minimize shrinkage stresses and distortion.

3. Welding shall be performed in accordance with requirements of the AWS Structural Welding Code.

   a. Welded Joint Details: comply with AISC Seismic Provisions.

4. Architecturally Exposed Structural Steel: Verify that weld sizes, fabrication sequence, and equipment used for Architecturally Exposed Structural Steel will limit distortions to allowable tolerances. Prevent surface bleeding of back-side welding on exposed steel surfaces. Grind smooth exposed fillet welds ½ inch (13 mm) and larger. Grind flush butt welds. Dress exposed welds.

5. Remove erection bolts on welded, Architecturally Exposed Structural Steel; fill holes with plug welds; and grind smooth at exposed surfaces.

G. Shop Finish:

1. Notify the inspector when Work is ready to receive shop prime coat. Work shall be inspected by the inspector before installation of primer.
2. Structural steel and fittings, except galvanized items, which will be exposed when building is completed, shall receive a coat of primer.
3. The primer specified shall be spray applied, filling joints and corners and covering surfaces with a smooth unbroken film. The minimum dry film thickness of the primer shall be 2.0 mils.
4. Do not prime surfaces that will be fireproofed, field welded, in contact with concrete or high strength bolted.

H. Comply with fabrication tolerance limits of AISC's "Code of Standard Practice for Steel Buildings and Bridges" for structural steel.

I. Fabricate Architecturally Exposed Structural Steel with exposed surfaces smooth, square, and free of surfaces blemishes, including pitting, rust and scale seam marks, roller marks, rolled trade names, and roughness.

1. Remove blemishes by filling, grinding, or by welding and grinding, prior to cleaning, treating and shop priming.
2. Comply with fabrication requirements, including tolerance limits of AISC's "Code of Standard Practice for Steel Buildings and Bridges" for Architecturally Exposed Structural Steel.

J. Not used.

2.4 SHOP AND FIELD QUALITY CONTROL

A. A special inspector, approved by DSA to inspect the Work of this section, shall inspect high-strength bolted connections. The Owner will provide a DSA approved independent testing laboratory to perform tests and prepare test reports in accordance with CBC 2213A. The inspector shall be responsible for monitoring the work of the special inspector and testing laboratories to ensure that the testing program is satisfactorily completed.

B. An AWS CWI certified special inspector, approved by DSA to inspect the Work of this section, shall inspect welded connections. The Owner will provide a DSA approved independent testing laboratory to perform tests and prepare test reports in accordance with CBC 1704A.2.4. The inspector shall be responsible for monitoring the work of the special inspector and testing laboratories to ensure that the testing program is satisfactorily completed.

C. The independent testing laboratory shall conduct and interpret test and state in each report whether test specimens comply with requirements, and specifically state any deviations there from.

D. Provide access to all places where structural steel Work is being fabricated or produced so required inspection and testing can be performed.

E. The independent testing laboratory may inspect and/or test structural steel at plant before shipment; however, Architect reserves the right at any time before Final Completion to deem materials not in compliance with the specified requirements as defective Work.

F. Correct defects in structural Work when inspections and laboratory test reports indicate noncompliance with specified requirements. Perform additional tests as may be required to reconfirm noncompliance of original Work, and as may be required to show demonstrate compliance of corrected Work.

G. Welding: Inspect and test during fabrication and erection of structural steel assemblies as follows:

1. Certify welders and conduct inspections and tests as required. Record types and locations of defects found in the Work. Record Work required and performed to correct deficiencies.
2. Inspect welds. Welds shall be visually inspected before performing any non-destructive testing. Groove weld shall be inspected by ultrasonic or other approved non-destructive test methods. Testing shall be performed to AWS D1.1 Table 6.3 cyclically loaded non-tubular connections.
3. Ultrasonic testing shall be performed by a specially trained and qualified technician who shall operate the equipment, examine welds, and maintain a record of welds examined, defects found, and disposition of each defect. Repair and test defective welds.
4. Rate of Testing: Completed welds contained in joints and splices shall be tested 100 percent either by ultrasonic testing or by radiography.
5. Welds, when installed in column splices, shall be tested by either ultrasonic testing or radiography.
6. Base metal thicker than 1-1/2 inches, when subjected to through-thickness weld shrinkage strains, shall be ultrasonically inspected by shear wave methods for discontinuities directly behind such welds. Tests shall be performed at least 48 hours after completed joint has cooled down to ambient air temperature.
7. Any material discontinuities shall be reviewed based on the defect rating in accordance with the criteria of AWS D1.1 table 6.3 by the Architect and DSA.
8. Other method of non-destructive testing and inspection, for example, liquid dye penetrate testing, magnetic particle inspection or radiographic inspection may be performed on weld if required.
9. Lamellar Tearing: Lamellar-tearing resulting from welding is a crack (with ero tolerance) and shall be repaired in accordance with AWS D1.1.
10. Lamination: The rejection criteria shall be based on ASTM A 435.
11. Where testing reveals lamination or conditions of lamellar tearing in base metal, the steel fabricator shall submit a proposed method of repair for review by the Architect. Test repaired areas as required.
12. Magnetic Particle Testing: Magnetic particle testing when required shall be provided in accordance with AWS D1.1 for procedure and technique. The standards of acceptance shall be in accordance with AWS D1.1 - Qualification.

H. Lamellar Tearing: Prior to welding plates 1 to 1-1/2 inches thick and greater and rolled shapes within the distance from 6 inches above the top of the joint to 6 inches below the bottom of the joint shall be checked by ultrasonic testing for laminations in base metal which may interfere with the inspection of the completed joint. Should these defects occur, members will be reviewed by the Architect and DSA. Welding procedure specifications in sub-section 1.5G specify welding practices to minimize lamellar tearing.

I. Prior Testing of Base Material: Test material before fabrication.

J. Lines and levels of erected steel shall be certified by a State of California licensed surveyor as set forth in related Division 01 section.

K. Welded studs shall be tested and inspected by the special inspector in accordance with requirements of AWS D1.1 - Stud Welding.

L. Record Drawings: After steel has been erected, correct or revise Shop Drawings and erection diagrams to correspond with reviewed changes performed in the field.

PART 3 - EXECUTION

3.1 PREPARATION

A. Verify governing dimensions and conditions of the Work before commencing erection Work.

1. Report discrepancies between drawings and field dimensions to Architect before commencing work.
2. Beginning of installation means erector accepts existing conditions and surfaces underlying or adjacent to work of this section.

B. Provide temporary shoring and bracing, and other support during performance of the Work. Remove after steel is in place and connected, and after cast-in-place concrete has reached its design strength.

3.2 ERECTION

A. Install structural steel accurately in locations, to elevations indicated, and according to AISC specifications and CBC requirements.

B. Clean surfaces of base plates and bearing plates.

1. Install base and bearing plates for structural members on wedges, shims, or setting nuts as required.
2. Tighten anchor bolts after supported members have been positioned and plumbed. Do not remove wedges or shims; cut off flush with edge of base or bearing plate before packing with grout.

C. Maintain erection tolerances of structural steel within AISC Code of Standard Practice for Steel Buildings and Bridges.

1. Members and components, plumbed, leveled and aligned to a tolerance not to exceed one-half the amount permitted for structural steel. Contractor to provide adjustable connections between Architecturally Exposed Structural Steel and the structural steel frame or the masonry or concrete supports, in order to provide the erector with means for adjustment.

D. Align and adjust various members forming part of complete frame or structure before permanently fastening. Before assembly, clean bearing surfaces and other surfaces that will be in permanent contact after assembly. Perform necessary adjustments to compensate for discrepancies in elevations and alignment.

1. Level and plumb individual members of structure.

E. Do not permit thermal cutting during erection of structural steel.

F. Where indicated for field connections, provide standard bolts complying with ASTM A 307.

G. Install high strength steel bolts at locations indicated. Assembly and installation shall be in accordance with CBC requirements.
   1. Allowable hole sizes: 1/16 inch larger than bolt size.
   2. Use friction type connection with standard hardened steel circular, square or rectangular washer under bolt nut.
   3. Thoroughly clean area under bolt head, nut and washer. Remove all paint, lacquer, oil or other coatings except organic zinc-rich paints in accordance with SSPC, SP-2.
   4. Tighten bolts by power torque wrench or hand wrench until twist-off.

H. Contractor shall be responsible for correcting detailing and fabrication errors and for correct fitting of all members and components.

I. Erect structural steel plumb and level and to proper tolerances as set forth in the AISC Manual. Provide temporary bracing, supports or connections required for complete safety of structure until final permanent connections are installed.

J. Install column bases within a tolerance of 1/8 inch of detailed centerlines, level at proper elevations. Support bases on double nuts and solidly fill spaces under bases with dry-pack cement grout.

K. Provide anchor bolts with templates and diagrams. Contractor shall be responsible for proper location and installation of bolts. Correct deficiencies and errors.

L. Galvanized Surfaces: Clean field welds, bolted connections, and abraded areas and apply galvanizing repair paint according to ASTM A780.

3.3 FITTING

A. Closely fit members, finished true to line and in precise position required to allow accurate erection and proper joining in the field.

B. Drilling to enlarge unfair holes will not be allowed. Allow only enough drifting during assembly to bring parts into position, but not sufficient enough to enlarge holes or distort the metal. Do not heat rolled sections, unless approved by Architect.

3.4 PUNCHING AND DRILLING

A. Punch material 1/16 inch larger than nominal diameter of bolt, wherever thickness of metal is equal to or less than the diameter of the bolt plus 1/8 inch.

B. Drill or sub-punch and ream where metal is equal to or more than the diameter of the bolt plus 1/8 inch. Make diameter for sub-punched and sub-drilled holes 1/16 inch larger than nominal diameter of bolt.

C. Precisely locate holes to ensure passage of bolt through assembled materials without drifting. Enlarge holes when necessary to receive bolts by reaming; flame cutting to enlarge holes is not acceptable. Structural Steel members with poorly matched holes will be rejected.

3.5 FINISHING

A. After erection, spots or surfaces where paint has been removed, damaged, or burned off and field rivets, bolts, and other field connections not concealed in the work, shall be cleaned of dirt, oil, grease, and burned paint and furnished with a spot coat of the same primer installed during shop priming.

B. Touchup Painting: Immediately after erection, clean field welds, bolted connections, and abraded areas of shop paint. Install paint to exposed areas with the same material installed during shop painting. Install by brush or spray to provide a minimum dry film thickness of 1.5 mils.

3.6 FIELD QUALITY CONTROL

A. Owner will provide a special inspector and independent testing laboratory to perform field inspections and tests and to prepare test reports.

B. Correct deficiencies in or remove and replace structural steel that inspections and test reports indicate do not comply with specified requirements.

3.7 CLEAN UP

A. Remove rubbish, debris and waste materials and legally dispose of off the Project Site.

3.8 PROTECTION

A. Protect the Work of this section until Substantial Completion.

3.9 HANDLING

A. Both in shop and in the field, transport, handle and erect to prevent damage or overstressing of any component.

END OF SECTION

SECTION 05 30 00

METAL DECKING

PART 1 - GENERAL

1.01 SUMMARY

A. Provisions of Division 01 apply to this section.

B. Section Includes:

1. Metal decking as indicated.
2. Shear connectors.

C. Related Sections:

1. Section 01 40 00: Testing and Inspection.
2. Section 05 12 00: Structural Steel
4. Section 07 60 00: Flashing and Sheet Metal.

D. Referenced Standards

1. Conform to current adopted reference standards by date of issue of the current code cycle and the Date of the Contract Documents.
2. 2019 CBC – California Building Code, (CCR) California Code of Regulations, Title 24, Part 2, Chapters 17A, 22A, and Section 2210A.
3. ASTM A36 - Specification for Structural Steel.
4. ASTM A 108 - Specification for Steel Bars, Carbon, Cold-Finished, Standard Quality.
5. ASTM A572 - Grade 50, Structural Steel.
6. ASTM A653/A653M-98 - Sheet Steel, Zinc-Coated (Galvanized) or Zinc - Iron Alloy Coated by the Hot- Dip Process.
7. ASTM A 1008 - Steel, Sheet, Cold-Rolled, Carbon, Structural, High-Strength Low-Alloy and High-Strength Low-Alloy with Improved Formability.
8. AWS D 1.1 - Structural Welding Code.
9. AWS D 1.3 - Structural Welding Code, Sheet Steel.

1.02 SYSTEM DESCRIPTION

A. Performance Requirements: Compute properties of deck sections on basis of effective design width as limited by provisions of the AISI specifications. Provide no less than deck section properties specified, including section modulus and moment of inertia per foot of width.

B. Regulatory Requirements:

1. Requirements of Regulatory Agencies: Underwriters Laboratories Inc. (UL) approval for the decking when installed as a part of an assembly indicated on Drawings in which fire resistive construction ratings are required.

2. Work of this section shall be in accordance with CBC.

1.03 SUBMITTALS

A. Shop Drawings: Drawings, sections and details indicate type of decking, location, finish, gage of metal, arrangement of sheets, necessary fabrication to incorporate decking into the Work, and relationship to openings and flashing.

1.04 QUALITY ASSURANCE

A. General: Metal decking steel shall conform to requirements of strengths and properties of standards specified.

B. Qualifications of Welders: Properly certified for the type of Work involved in compliance with CBC requirements.

C. Continuous inspection of welding will be performed by a special inspector, approved by Structural Engineer to inspect the Work of this section. Refer to Section 01 40 00: Testing and Inspection.

D. Identification of metal decking steel shall conform to the standards specified in Section 01 40 00: Testing and Inspection.

1. Fabricator shall furnish sufficient evidence to the Architect attesting compliance with specified requirements.

2. Conform to CBC requirements. Unclassified or unidentified decking is not permitted. Furnish deck manufacturer's certified mill analyses and test reports for each heat covering decking having Fy of 33 Ksi or less. In addition, for decking having Fy greater than 33 Ksi, testing laboratory shall perform one tension and elongation test and one bend or flattening test for each gage.

E. Unidentifiable Steel: Steel which is not readily identifiable as to grade from markings and test records is not permitted to be provided as part of the Work of this section.

F. Payment For Tests and Inspections:

1. Owner shall pay inspection and testing costs of identifiable steel.

PART 2 - PRODUCTS

2.01 ACCEPTABLE MANUFACTURERS

A. BHP Steel Building Products, Inc.

B. Verco Manufacturing Co.

C. Epic Deck

D. Members of Steel Deck Institute (SDI).

2.02 MATERIALS

A. Metal Decking: Roll-formed sheets conforming to ASTM A653 Grade 50 minimum, with G90 zinc coating.

1. Section properties shall conform to applicable provisions of latest edition of AISI - Specification for the Design of Cold-Formed Steel Structural Members.

2. **Provide decking as indicated on the architectural and structural drawings.**

B. Flexible Closure Strips for Deck: Vulcanized, closed-cell, expanded chloroprene elastomer, complying with ASTM D 1056, Grade SCE #41.

1. Brittleness Temperature: Minus 40 degrees F, ASTM D 746.

2. Flammability Resistance: Self-extinguishing, ASTM D 1692.

C. Metal Flashing and Closures: 22 gage minimum, with ASTM A653, G90 zinc coating, unless noted otherwise on drawings.

D. Shear Connectors: Headed stud type, ASTM A 108 Grade 105 or 1020, cold-finished carbon steel complying with AISC specifications.

2.03 FABRICATION

A. Corrugated sheets or sections shall be designed to support required live load between supporting members.

B. Wherever practical, provide decking in lengths to span over three or more supports.

C. Except as detailed otherwise, provide decking with interlocking side laps, 2-1/2 inches minimum end bearing, and 1-1/2 inches minimum side bearing.

D. Welding: Provide materials and methods in accordance with recommendations of steel decking manufacturer and reviewed submittals. Hold decking tight to the supporting elements with screws or other means for proper welding or crimping of the decking edges. Conform to AWS D1.3, CBC Standards, and to the patterns and weld types indicated, with welds free from sharp edges and protrusions. Field coat welds and abraded surfaces at completion with a anodic type galvanizing repair paint. Omit the field paint coating where welds or abrasions are covered by concrete fill or sprayed fireproofing.

PART 3 - EXECUTION

3.01 OPENINGS

A. Cut and reinforce units to provide openings which are located and dimensioned on the structural and mechanical Drawings.

B. Provide openings, as approved by the Architect and Structural Engineer, for other Work not indicated on the Drawings.

3.02 INSTALLATION

A. Install metal decking in accordance with decking manufacturers' recommendations, requirements of Drawings, Shop Drawings, and Specifications.

B. Install metal decking on supporting steel framework and adjust to final position before permanently fastening in place.

1. Install each unit to proper bearing on supports.
2. Install units in straight alignment for entire length of run of cells with close registration of cells of one unit with those of abutting unit.

C. Fasten decking to steel framework at ends of units and at intermediate supports. Welding shall be as indicated on Drawings.

D. Fasten side laps between supports as indicated on Drawings.

E. Perform field cutting parallel with cells in area between cells, leaving sufficient horizontal material to permit welding to support steel.

F. Weld shear connectors to supports thru decking units as required by Drawings. Weld only on clean, dry surfaces. Do not weld shear connectors thru two layers of decking units.

3.03 METAL FLASHINGS AND CLOSURES

A. Furnish, install, and weld in position, sheet metal closure flashing, closure angles, closure plates, profile plates, and shear plates.

B. Close open ends of cell runs at columns, openings, walls, similar interruptions and termination.

3.04 FIELD QUALITY CONTROL

A. Inspection: Install steel decking under continuous inspection according to CBC Chapter 22A, Chapter 17A, and Section 01 40 00

3.05 CLEAN UP

A. Remove rubbish, debris, and waste materials and legally dispose of off the Project site.

3.06 PROTECTION

A. Protect the Work of this section until Substantial Completion.

END OF SECTION

SECTION 05 31 00

STEEL DECKING

PART 1 - GENERAL

1.1 SUMMARY

A. Section Includes:

1. Metal decking.
2. Shear connectors.

B. Related Requirements:

1. Division 01 - General Requirements.
2. Section 01 45 33 - Code-Required Special Inspections.
3. Section 05 12 00 - Structural Steel Framing.

1.2 REFERENCES

A. AISI - Specifications for the Design of Cold-Formed Steel Structural Members.

B. ASTM A108 - Standard Specification for Steel Bar, Carbon and Alloy, Cold-Finished.

C. ASTM A653 - Standard Specification for Steel Sheet, Zinc-Coated (Galvanized) or Zinc-Iron Alloy-Coated (Galvannealed) by the Hot-Dip Process.

D. ASTM D746 - Standard Test Method for Brittleness Temperature of Plastics and Elastomers by Impact.

E. ASTM D1056 - Standard Specification for Flexible Cellular Materials-Sponge or Expanded Rubber.

F. AWS D1.3 - Structural Welding Code Sheet - Steel.

1.3 PERFORMANCE REQUIREMENTS

A. Compute properties of deck sections on basis of effective design width as limited by provisions of the AISI specifications. Provide no less than deck section properties specified, including section modulus and moment of inertia per foot of width.

B. Regulatory Requirements:

1. Requirements of Regulatory Agencies: DSA and Underwriters Laboratories Inc. (UL) approval for the decking when installed as a part of an assembly indicated on Drawings in which fire resistive construction ratings are required.
2. Work of this section shall be in accordance with CBC.

C. Manufacturers shall be members of Steel Deck Institute (SDI).

1.4 SUBMITTALS

A. Shop Drawings: Drawings, sections and details indicate type of decking, location, finish, gage of metal, arrangement of sheets, necessary fabrication to incorporate decking into the Work, and relationship to openings and flashing.

1.5 QUALITY ASSURANCE

A. General: Metal decking steel shall conform to requirements of strengths and properties of standards specified.

B. Qualifications of Welders: Properly certified for the type of Work involved in compliance with CBC requirements.

C. Continuous inspection of welding will be performed by a special inspector, approved by DSA to inspect the Work of this section. Refer to Section 01 45 33 - Code-Required Special Inspections. The Project Inspector shall be responsible for monitoring the work of the special inspector to ensure that the inspection program is satisfactorily completed.

D. Identification of metal decking steel shall conform to the standards specified in Section 01 45 33 - Code-Required Special Inspections.

1. Fabricator shall furnish sufficient evidence to the Architect attesting compliance with specified requirements.

2. Conform to CBC requirements. Unclassified or unidentified decking is not permitted. Furnish deck manufacturer's certified mill analyses and test reports for each heat covering decking having a minimum Fy of 33 Ksi. In addition, for decking having Fy greater than 33 Ksi, testing laboratory shall perform one tension and elongation test and one bend or flattening test for each gage.

E. Unidentifiable Steel: Steel which is not readily identifiable as to grade from markings and test records is not permitted to be provided as part of the Work of this section.

PART 2 - PRODUCTS

2.1 ACCEPTABLE MANUFACTURERS

A. ASC Steel Deck. (IAPMO # 0329)

B. OR equal with valid IAPMO or ICC report that meets/exceeds minimum section properties noted on plan.

2.2 MATERIALS

A. Metal Decking: Roll-formed sheets conforming to ASTM A653, with G90 zinc coating.

1. Section properties shall conform to applicable provisions of latest edition of AISI - Specification for the Design of Cold-Formed Steel Structural Members.

B. Flexible Closure Strips for Deck: Vulcanized, closed-cell, expanded chloroprene elastomer, complying with ASTM D1056, Grade SCE #41.

1. Brittleness Temperature: Minus 40 degrees F, ASTM D746.

2. Flammability Resistance: Self-extinguishing,

C. Metal Flashing and Closures: 22 gage minimum, with ASTM A653, G90 zinc coating.

D. Shear Connectors: Headed stud type, ASTM A108 Grade 1015, cold-finished carbon steel complying with AISC specifications.

2.3 FABRICATION

A. Corrugated sheets or sections shall be designed to support required live load between supporting members.

B. Provide decking in lengths to span over three or more supports.

C. Except as detailed otherwise, provide decking with interlocking side laps, 2 ½-inch minimum end bearing, and 1 ½-inch minimum side bearing.

D. Welding: Provide materials and methods in accordance with recommendations of steel decking manufacturer and reviewed submittals. Hold decking tight to the supporting elements with screws or other means for proper welding or crimping of the decking edges. Conform to AWS D1.3, and to the patterns and weld types indicated, with welds free from sharp edges and protrusions. Field coat welds and abraded surfaces at completion with an anodic type galvanizing repair paint. Omit the field paint coating where welds or abrasions are covered by concrete fill or sprayed fireproofing.

PART 3 - EXECUTION

3.1 OPENINGS

A. Cut and reinforce units to provide openings which are located and dimensioned on the structural and mechanical Drawings.

B. Provide openings, or other Work not indicated on the Drawings.

3.2 INSTALLATION

A. Install metal decking in accordance with decking manufacturers' recommendations, requirements of Drawings, Shop Drawings, and Specifications.

B. Install metal decking on supporting steel framework and adjust to final position before permanently fastening in place.

1. Install each unit to proper bearing on supports.

2. Install units in straight alignment for entire length of run of cells with close registration of cells of one unit with those of abutting unit.

C. Fasten decking to steel framework at ends of units and at intermediate supports. Welding shall be as indicated on Drawings.

D. Fasten side laps between supports as indicated on Drawings.

E. Perform field cutting parallel with cells in area between cells, leaving sufficient horizontal material to permit welding to support steel.

F. Weld shear connectors to supports thru decking units as required by Drawings. Weld only on clean, dry surfaces. Do not weld shear connectors thru two layers of decking units.

3.3 METAL FLASHINGS AND CLOSURES

A. Furnish, install, and weld in position, sheet metal closure flashing, closure angles, closure plates, profile plates, and shear plates.

B. Close open ends of cell runs at columns, openings, walls, similar interruptions and termination.

3.4 FIELD QUALITY CONTROL

A. Inspection: Install steel decking under continuous inspection according to CBC Chapter 1705A.2.2.

1. Welding inspection for steel deck diaphragms shall conform to CBC Section 1705A.2.5.

3.5 CLEAN UP

A. Remove rubbish, debris, and waste materials and legally dispose of off the Project site.

3.6 PROTECTION

A. Protect the Work of this section until Substantial Completion.

END OF SECTION

SECTION 05 40 00

COLD-FORMED METAL FRAMING

PART 1 – GENERAL

1.1 SECTION INCLUDES

A. Not used.

B. Interior load-bearing wall framing.

C. Exterior non-load-bearing, curtain-wall framing.

D. Not used.

1.2 PERFORMANCE REQUIREMENTS

A. Structural Performance: Provide cold-formed metal framing capable of withstanding design loads without deflections greater than the following:

1. Exterior Load-Bearing Wall Framing: Horizontal deflection of L/240 of the wall height.

2. Interior Load-Bearing Wall Framing: Horizontal deflection of L/240 of the wall height.

3. Exterior Non-Load-Bearing, Curtain-Wall Framing: Horizontal deflection of L/360 of the wall height.

1.3 SUBMITTALS

A. Product Data: For each product indicated.

B. Shop Drawings: Include layout, spacings, sizes, thicknesses, and types of cold-formed metal framing; fabrication; and fastening and anchorage details, including mechanical fasteners as noted on drawings.

C. Mill certificates.

D. Welder certificates.

E. Research/evaluation reports.

1.4 QUALITY ASSURANCE

A. Not used.

B. Mill certificates signed by steel sheet producer

C. Welding: Qualify procedures and personnel according to AWS D1.1, "Structural Welding Code--Steel," and AWS D1.3, "Structural Welding Code--Sheet Steel."

D. Fire-Test-Response Characteristics: Where metal framing is part of a fire-resistance-rated assembly, provide framing identical to that of assemblies tested for fire resistance per ASTM E119 by a testing agency acceptable to authorities having jurisdiction.

1. Fire-Resistance Ratings: Indicated by GA File Numbers in GA-600, "Fire Resistance Design Manual," or by design designations from UL's "Fire Resistance Directory" or from the listings of another testing agency.

E. Comply with HUD's "Prescriptive Method for Residential Cold-Formed Steel Framing."

PART 2 PRODUCTS

2.1 MANUFACTURERS

A. Available Manufacturers: Subject to compliance with requirements, manufacturers offering products that may be incorporated into the Work include, but are not limited to, the following:

B. Manufacturers: Subject to compliance with requirements, provide products by one of the manufacturers listed in ICC ESR 3064P.

2.2 MATERIALS

A. Steel Sheet: ASTM A 653/A 653M, structural steel, G60 (Z180) zinc coating, Grade 33 for minimum uncoated steel thickness of 0.0428 inch and less; Grade 50 for minimum uncoated steel thickness of 0.0538 inch and greater.

B. Wall Framing: Manufacturer's standard steel studs, of web depths indicated, with stiffened flanges, complying with ASTM C 955.

C. Joist Framing: Manufacturer's standard C-shaped steel joists, of web depths indicated, punched, with stiffened flanges, complying with ASTM C 955.

2.3 ACCESSORIES AND MISCELLANEOUS MATERIALS

A. Fabricate steel-framing accessories of the same material and finish used for framing members, with a minimum yield strength of 33,000 psi, of manufacturer's standard thickness and configuration, unless otherwise indicated.

B. Steel Shapes and Clips: ASTM A36/A36M, zinc coated by hot-dip process according to ASTM A123.

C. Anchor Bolts: ASTM F1554, Grade 55, threaded carbon-steel hex-headed bolts and carbon-steel nuts; and flat, hardened-steel washers; zinc coated by hot-dip process according to ASTM A153/A153M, Class C.

D. Expansion Anchors: Fabricated from corrosion-resistant materials, size, spacing, and embedment per plan.

E. Power-Actuated Anchors: Fabricated from corrosion-resistant materials, size, spacing, and embedment per plan.

F. Mechanical Fasteners: Corrosion-resistant-coated, self-drilling, self-threading steel drill screws.

G. Cement Grout: Portland cement, ASTM C150, Type I; and clean, natural sand, ASTM C404. Mix at ratio of 1 part cement to 2-1/2 parts sand, by volume, with minimum water required for placement and hydration.

H. Thermal Insulation: ASTM C665, Type I, unfaced mineral-fiber blankets produced by combining glass or slag fibers with thermosetting resins.

PART 3 EXECUTION

3.1 INSTALLATION

A. Preparation: Grout bearing surfaces uniform and level to ensure full contact of bearing flanges or track webs on supporting concrete or masonry construction. contact of bearing flanges or track webs on supporting concrete or masonry construction.

B. Install cold-formed metal framing and accessories plumb, square, and true to line, and with connections securely fastened, according to ASTM C1007, manufacturer's written recommendations, and requirements in this Section.

1. Cut framing members by sawing or shearing; do not torch cut.
2. Fasten cold-formed metal framing members by welding or screw fastening, as standard with fabricator. Wire tying of framing members is not permitted.
3. Install framing members in one-piece lengths.
4. Install temporary bracing and supports to secure framing and support loads comparable in intensity to those for which structure was designed.
5. Install insulation in built-up exterior framing members, such as headers, sills, boxed joists, and multiple studs at openings, that are inaccessible on completion of framing work.
6. Fasten hole reinforcing plate over web penetrations that exceed size of manufacturer's standard punched openings.

C. Erection Tolerances: Install cold-formed metal framing level, plumb, and true to line to a maximum allowable tolerance variation of 1/8 inch in 10 feet and as follows:

1. Space individual framing members no more than plus or minus 1/8 inch from plan location. Cumulative error shall not exceed minimum fastening requirements of sheathing or other finishing materials.

D. Load-Bearing Wall Installation: Install continuous top and bottom tracks sized to match studs. Align tracks accurately and securely anchor at corners and ends. Squarely seat studs against webs of top and bottom tracks. Space studs as indicated, set plumb, align, and fasten both flanges of studs to top and bottom tracks.

1. Align studs vertically where wall-framing continuity is interrupted by floor framing. Where studs cannot be aligned, continuously reinforce track to transfer loads.
2. Align floor and roof framing over studs. Where framing cannot be aligned, continuously reinforce track to transfer loads.
3. Anchor studs abutting structural columns or walls, including masonry walls, to supporting structure as indicated.
4. Install headers over wall openings wider than stud spacing. Locate headers above openings as indicated. Fabricate headers of compound shapes indicated

or required to transfer load to supporting studs, complete with clip-angle connectors, web stiffeners, or gusset plates.

5. Frame wall openings with not less than a double stud at each jamb of frame as indicated on Shop Drawings.
6. Install runner tracks and jack studs above and below wall openings. Anchor tracks to jamb studs with clip angles or by welding, and space jack studs same as full-height wall studs.
7. Install horizontal bridging in stud system, spaced as indicated on Shop Drawings. Fasten at each stud intersection.
8. Install miscellaneous framing and connections, including supplementary framing, blocking, bracing, web stiffeners, clip angles, continuous angles, anchors, and fasteners, to provide a complete and stable wall-framing system.

E. Non-Load-Bearing, Curtain-Wall Installation: Install continuous tracks sized to match studs. Align tracks accurately and securely anchor to supporting structure. Space studs as indicated; set plumb, align, and fasten both flanges of studs to track, unless otherwise indicated.

1. Isolate non-load-bearing steel framing from building structure to prevent transfer of vertical loads while providing lateral support.
2. Install horizontal bridging in curtain-wall studs, spaced in rows indicated on Shop Drawings. Fasten at each stud intersection.
3. Install miscellaneous framing and connections, including stud kickers, web stiffeners, clip angles, continuous angles, anchors, fasteners, and stud girts, to provide a complete and stable curtain-wall-framing system.

F. Joist Installation: Install, align, and securely anchor perimeter joist track sized to match joists as indicated on Shop Drawings. Install joists bearing on supporting frame, level, straight, and plumb; adjust to final position, brace, and reinforce. Fasten to both flanges of joist track.

1. Install joists over supporting frame with a minimum end bearing of 1-1/2 inches. Reinforce ends and bearing points of joists as indicated on Shop Drawings.
2. Space joists not more than 2 inches from abutting walls and at spacings indicated.
3. Frame openings with built-up joist headers consisting of joist and joist track, nesting joists, or another combination of connected joists if indicated.
4. Install joist reinforcement at interior supports with single, short length of joist section located directly over interior support, with lapped joists of equal length to joist reinforcement, or as indicated. Install web stiffeners to transfer axial loads of walls above.
5. Install bridging at each end of joists and at intervals indicated. Fasten bridging at each joist intersection as indicated.

6. Secure joists to load-bearing interior walls to prevent lateral movement of bottom flange.
7. Install miscellaneous joist framing and connections, including web stiffeners, closure pieces, clip angles, continuous angles, hold-down angles, anchors, and fasteners, to provide a complete and stable joist-framing assembly.

G. Galvanizing Repairs: Prepare and repair damaged galvanized coatings on fabricated and installed cold-formed metal framing with galvanized repair paint according to ASTM A780 and manufacturer's written instructions.

3.2 FIELD QUALITY CONTROL

A. Testing: Owner will engage a qualified independent testing agency to perform field quality-control testing.
1. Field and shop welds will be subject to testing and inspection.
2. Remove and replace Work that does not comply with specified requirements.
3. Additional testing and inspecting, at Contractor's expense, will be performed to determine compliance of corrected Work with specified requirements.

END OF SECTION

SECTION 05 50 00

METAL FABRICATION

PART - 1 GENERAL

1.1 Description:

A. Section Includes:

1. Light structural steel framing members and structural steel support members, with required bracing, welding and fasteners.

2. Steel and aluminum, materials for miscellaneous metal fabrications specified in this section and required but not specified in other sections.

3. Anchors and fasteners for connection to concrete and steel construction.

4. Shrinkage-resistant grout and grouting of structural framing base plates, equipment anchors and miscellaneous metal fabrications.

5. Characteristics, including fabrication and finish requirements for metal fabrications not otherwise specified in other sections.

6. Galvanizing of steel products.

7. Shop priming and painting of steel fabrications.

8. Miscellaneous metal fabrications, such as:

   a. Loose bearing and leveling plates.
   b. Steel angle nosings and thresholds.
   c. Rough hardware.
   d. Sleeves for penetrations through structural members and stud partitions.

B. Related Sections:

1. Section 03 20 00 – Concrete Reinforcing: Placement of embedded products.

2. Section 03 30 00 – Cast-in-Place Concrete: Materials and methods for grouting of structural members.

3. Section 06 10 00 – Rough Carpentry: Metal framing anchors.

4. Section 09 90 00 – Painting and Coating: Field priming; field-applied finish on interior metal fabrications.

1.2 References:

A. 2001 California Building Code

B. Aluminum Association (AA):

1. AA - Standards for Architectural Aluminum.

2. AA - Designation System for Aluminum Finishes.

C. American Hot Dip Galvanizers Association (AHDGA): Recommended Details for Galvanized Structures.

D. American Institute of Steel Construction (AISC):

1. AISC Manual of Steel Construction.

2. AISC Specification for the Design, Fabrication and Erection of Structural Steel for Buildings.

E. American Welding Society (AWS):

1. AWS D1.1 - Structural Welding Code--Steel.

2. AWS D1.2 - Structural Welding Code--Aluminum.

3. AWS D1.3 - Structural Welding Code--Sheet Steel.

F. National Association of Architectural Metals Manufacturers (NAAMM): Metal Finishes Manual.

G. Steel Structures Painting Council (SSPC): SSPC Painting Manual, Volumes 1 and 2.

1.3 Submittals:

A. Product Data: Submit catalog data for all standard production products.

B. Shop drawings:

1. Indicate fabrication and installation of metal fabrications.

2. Indicate profiles, sizes, connection attachments, reinforcing, anchorage, size and type of fasteners, and accessories.

3. Include erection drawings, elevations, and details where applicable.

4. Indicate welded connections using standard AWS welding symbols. Indicate net weld lengths.

5. For products indicated to comply with certain design loadings, include structural analysis data sealed and signed by a Professional Structural Engineer registered to practice in the State of California, who was responsible for their preparation.

C. Product Data: Submit catalog data for all standard production products.

D. Coating Submittals:

1. Product Data: Submit manufacturer's product data for each coating, Including generic description, complete technical data, surface preparation, and application instructions.

2. Color Samples: Submit manufacturer’s color samples showing full range of standard colors.

3. Manufacturer’s Quality Assurance: Submit manufacturer’s certification that coatings comply with specified requirements and are suitable for intended application.

4. Applicator’s Quality Assurance: Submit list of a minimum of 5 completed projects of similar size and complexity to this Work. Include for each project:

a. Project name and location.
b. Name of owner.
c. Name of contractor.
d. Name of architect.
e. Name of coating manufacturer.
f. Approximate area of coatings applied.
g. Date of completion.

5. Warranty: Submit manufacturer’s standard warranty.

1.4 Quality Assurance:

A. Regulatory Requirements: Conform to Uniform Building Code (UBC), Chapter 22.

B. Fabricator's Qualifications: Fabricator of light structural steel framing members and other miscellaneous metal fabrications of structural character shall be approved by the Building Official in accordance with applicable code provisions.

C. Welder's Qualifications: Welding shall be performed by certified welders qualified in accordance with procedures specified in applicable referenced AWS standard, using materials, procedures and equipment of the type required for the Work. Certify that

each welder has satisfactorily passed AWS qualification tests for welding processes involved and, if pertinent, has undergone re-certification.

D. Coordination: Provide templates and sleeves for incorporation of embedded items into the work specified elsewhere herein.

E. Coordination: Provide templates and sleeves for incorporation of embedded items into the Work specified in other sections.

F. Field-Verified Dimensions: Prior to fabrication, field verify dimensions and details of construction. Immediately report variances in writing to Engineer.

1.5 Delivery, Storage and Handling:

A. Storage, General: Store products in enclosed, well-ventilated spaces, not in contact with soil or vegetation and not subject to inclement weather.

B. Delivery, Storage and Handling, Galvanized Products:

1. Stack and bundle during transport and store to allow air flow between galvanized surfaces.

2. Load for transport to permit continuous drainage should wetting occur.

3. Do not rest galvanized products on cinders or clinkers.

1.6 Project Conditions:

A. Field Inspection of Fabricated Products: Prior to installation, inspect products for damage and verify markings and dimensions against reviewed submittals.

B. Environmental Conditions: Do not install products intended for interior locations when spaces are uncovered and unprotected from inclement weather.

C. Coordination: Coordinate metal fabrications Work with Work specified in other sections so that related Work shall be accurately and properly joined.

PART - 2 PRODUCTS

2.1 Ferrous Metals:

A. Ferrous Metal Surfaces, General: For metal fabrications exposed to view upon completion of the Work, provide ferrous metals materials selected for their surface flatness, smoothness, and freedom from surface blemishes. Do not use materials whose exposed surfaces exhibit pitting, seam marks, roller marks, rolled trade names, roughness, and, for steel sheet, variations in flatness exceeding those permitted by reference standards for stretcher-leveled sheet.

B. Steel Shapes: Steel plates, bars, angles, channels, and H-sections: ASTM A36.

C. Steel Tube:

1. Hot-rolled: ASTM A501.

2. Cold-formed: ASTM A500.

D. Steel Pipe: ASTM A53 (black steel and hot-dip galvanized).

E. Steel Sheet:

1. For structural uses: Hot-rolled, ASTM A570; cold-rolled, ASTM A611.

2. For nonstructural uses: Cold-rolled, ASTM A366; hot-rolled, ASTM A569.

F. Steel for Galvanized Products:

1. Structural shapes, plates and bars: From fully killed or semi-killed steel, ASTM A36 or A572, except silicon content in the range 0 to 0.4 percent or 0.15 to 0.25 percent, as applicable, only.

2. Steel fasteners: ASTM 307, Grade A or B for bolts; ASTM A563, Grade A for nuts.

3. Sheet steel: ASTM A526, with ASTM A525, Coating Designation G90, for precoated sheet; ASTM A569 or A570 for sheet used in fabrications.

4. Steel for pipe and tubing: ASTM A53, A120 or A595 Grade A or B.

5. Galvanizing: See requirements specified below.

2.2 Corrosion-Resistant (Stainless) Steel:

A. Bars, Shapes and Forgings: ASTM A276, Type 302 or 304 as best suited for intended purpose.

B. Plates, Sheets and Strips: ASTM A167 or ASTM A176, Type 302 or 304 as best suited for intended purpose.

C. Finish: No. 4, polished, unless otherwise indicated.

2.3 Aluminum Materials:

A. Aluminum Bars, Rod and Wire and Non-Structural Tubes: ASTM B211 for rolled or cold-finished; ASTM B221 for extruded. Provide alloy and temper best suited for

purpose.

B. Aluminum Sheet and Plate: ASTM B209, temper best suited for purpose.

C. Cast Aluminum: ASTM B103, alloy and temper best suited for purpose.

D. Finishes:

1. Unexposed sheet and plate: Mill finish.

2. Castings: Sandblast finish, medium, equal to NAAMM Metal Finishing Manual, Designation AA-M43.

3. Anodizing: When indicated, AA Class I, except Class II for products in corrosive atmosphere, coating thickness in conformance to AA Designation System for Aluminum Finishes, polished satin finish on aluminum before coating, with clear lacquer overcoating.

2.4 Hardware and Industrial Cloth:

A. Hardware and Industrial Cloth (Wire Mesh): 4 mesh (1-inch square) by 23 gauge steel mesh, as produced by McNichols Co., Tampa, FL or approved equal.

2.5 Anchors, Fasteners and Accessory Materials:

A. Anchors and Fasteners, General: Same material, color and finish as the metal to which applied, unless otherwise indicated.

B. Exterior Exposure: Provide stainless steel.

C. Type, Size and Spacing: Unless otherwise indicated, provide fasteners of type, grade and class required for intended use and sized and spaced as required for loads and substrate.

D. Screw Head, Typical: Unless otherwise noted, exposed screws shall be phillips oval or flat head, countersunk.

E. Standard Bolts and Nuts, Steel: ASTM A307, Grade A, hexagonal head.

F. Lag Screws and Bolts, Steel: ANSI B18.2.1, type and grade best suited for the purpose, hexagonal or square head.

G. Plain Steel Screws: FS FF-S-85, FS FF-S-92 and FS FF-S-111; type and grade best suited for the purpose.

H. Stainless Steel Screws: AISI 300 Series.

I. Self-Drilling Metal Fasteners: TEKS by Buildex Division, Illinois Tool works, Inc.

J. Plain Steel Washers: FS FF-W-92, round, carbon steel.

K. Lock Washers: FS FF-W-84, helical spring, carbon steel.

L. Toggle Bolts: FS FF-W-588, type, class and style as required for substrate.

M. Concrete and Masonry Anchors, Wedge-Type: As indicated on the Plans or, if not indicated, Kwik-Bolt or Red Head, or approved equal; provide type and size as indicated or, if not indicated, as directed by Engineer.

N. Concrete and Masonry Anchors, Self-Threading: TAPCON, as manufactured by Buildex Division, Illinois Tool Works, Inc., or approved equal.

O. Fiber Plugs and Screws: Not permitted.

P. Lead Expansion Shields: Not Permitted.

Q. Power-Driven Fasteners: Use only if approved by Engineer, generally not permitted where not specifically indicated or in load-bearing installations; Fed Spec FF-P-395 or Fed Spec GGG-D-777; Hilti, RamSet or approved equal.

R. Welding Rods and Bare Electrodes: Select in accordance with AWS specifications for the metal alloy to be welded.

2.6 Paints and Coatings:

A. Shop Primer Paint:

1. Shop primer, general: Coordinate primer with finish paint and coating, as applicable, to provide sound foundation for field-applied topcoats despite prolonged exposure during construction. Refer to Section 09905 - Field Painting and Section 09970 - Coatings for Exterior Steel.

2. Shop primer for ferrous metal at exposed exterior locations: Series 90-97 Tnemec-Zinc Organic Zinc-Rich Primer, as manufactured by Tnemec Company, Inc., Kansas City, MO, or approved equal.

3. Shop primer for ferrous metal at concealed exterior locations and for interior locations: Tnemec Series 115, modified alkyd rust-inhibitive primer, or manufacturer's or fabricator's standard, fast-curing, lead-free, universal modified alkyd primer, complying with performance requirements of FS TT-P-645.

4. Shop primer for galvanized steel, for exposed exterior locations: Series 66 Epoxoline Two-Part Catalyzed Epoxy Coating, as manufactured by Tnemec

Company, Inc., Kansas City, MO, or approved equal.

B. Field Primer and Finish Paints: As specified in Section 09 90 00 - Field Painting and in Section 09 97 00 - Coatings for Exterior Steel.

C. Bituminous Coating: High-build mineral-filled coal tar pitch coating, 46-450 Heavy Tnemecol, as manufactured by Tnemec Company, Inc., Kansas City, MO, or approved equal; or a cold-applied asphalt mastic complying with SSPC-Paint 12, except containing no asbestos fibers.

2.7 Grouting Compounds:

A. Metallic Shrinkage-Resistant Grout: For filling under equipment and interior miscellaneous metal fabrications; pre-mixed factory-packaged compound, metallic aggregate, minimum 7000 psi 28-day compressive strength. Confirm product selection with manufacturer's recommendations for intended use.

1. Firmix by Euclid Chemical Co., Cleveland, OH

2. Embeco 636 or Embeco 885 by Master Builders Technology, Inc., Cleveland, OH.

3. Kemox G by Sika Corporation, Lyndhurst, NJ

4. Ferrolith G by Sonneborn Building Products, Division of ChemRex, Inc., Minneapolis, MN.

5. Or approved equal.

B. Non-Metallic Shrinkage-Resistant Grout: For filling around anchors for exterior miscellaneous metal fabrications; pre-mixed, non-metallic, non-corrosive, non-staining product containing selected silica sands, portland cement, shrinkage compensating agents, plasticizing and water-reducing agents, complying with CE-CRD-C621, minimum 7000 psi 28-day compressive strength.

1. Euco N.S. by Euclid Chemical Co., Cleveland, OH

2. Masterflow 713 or Masterflow 928 by Master Builders Technology, Inc., Cleveland, OH.

3. Or approved equal.

C. Shrinkage-Resistant Setting Grout: For setting railing posts and similar components in sleeves or blockouts in concrete; pre-mixed, natural aggregate, minimum 7000 psi 28-day compressive strength, Set Grout, as manufactured by Master Builders Technology, Inc., Cleveland, OH, or approved equal.

D. Non-Shrink Polymer (Epoxy) Grout: For setting anchor bolts in concrete.

1. For anchor bolts for structural members: As noted on Plans.

2. For anchor bolts for non-structural components: Polymer (epoxy) grout, Brutem MP or AB, as recommended by manufacturer for intended use, as manufactured by Master Builders Technology, Inc., Cleveland, OH, or approved equal.

2.8 Metal Fabrications, General:

A. Metal Fabrications, General: Provide metal fabrications of shapes and sizes indicated for profiles shown.

1. Where specific sizes are not indicated, provide materials of sufficient size, thickness and type to provide necessary strength and durability.

2. Thickness of metal, details of metal, details of assembly and support shall give ample strength and stiffness for the intended purpose.

3. Provide brackets, flanges and anchors of cast or formed metal of the same type material and finish fabricated product, unless otherwise indicated.

4. For exterior fabrications, allow for thermal movement in the design, fabrication, and installation of metal fabrications, to prevent buckling, opening up of joints, and overstressing of welds and fasteners. Accommodate temperature range of 100 degrees F.

B. Preparation Before Fabrication: Remove loose mill scale and rust and remove twists and bends in manners not injurious to materials and finishes.

C. Fabrication: Fabricate and finish metal items in accordance with the Plans and reviewed shop drawings.

1. Contractor shall verify measurements before fabrication.

2. Hot-dip galvanize fabricated ferrous items after fabrication. Field connections shall be bolted or screwed where possible. Avoid field cutting and welding which damage galvanized coating.

3. Fabricate and shop-assemble in largest practical sections for delivery to site.

4. Prepare and reinforce fabrications as required to receive applied items.

D. Cutting and Fitting: Fabricate with accurate angles and surfaces, true to the required lines and levels and as required to suit installation conditions.

1. Fabricate items with joints tightly fitted and secured.

2. Make exposed joints tight, flush, and hairline.

3. Punch, drill and reaming in manner to leave clean, true lines and surfaces.

   a. Oversize hole 1/16-inch by punching, when material thickness is equal to or less than bolt diameter plus 1/8-inch.

   b. Sub-punch 1/16-inch smaller than bolt and drill or ream to oversize by 1/16-inch, when material thickness is thicker than bolt diameter plus 1/8-inch.

4. Gas cutting of steel will be acceptable where stress will not be transmitted through flame-cut surfaces.

   a. Make cuts clean and to contour.

   b. Deduct 1/8-inch from effective width of members cut by torch.

5. Cut, reinforce, drill and tap miscellaneous metal work as indicated to receive finish hardware, screws, and similar items.

6. Provide cutouts, fittings, and anchorage provisions as required for coordination of assembly and installation with other Work.

E. Edges: Ease exposed edges to a radius of approximately 1/32 inch, unless otherwise indicated. Form bent-metal corners to smallest radius possible without causing grain separation or otherwise impairing work. Remove sharp or rough areas on exposed traffic surfaces.

F. Welding: Weld corners and seams continuously to comply with AWS recommendations and the following:

   1. Use materials and methods that minimize distortion and develop strength and corrosion resistance of base metals.

   2. Obtain fusion without undercut or overlap.

   3. Remove welding flux immediately.

   4. At exposed connections, finish exposed welds and surfaces smooth and blended so that no roughness shows after finishing and contour of welded surface matches those adjacent.

G. Coordination: Make provisions to connect metal fabrications with or to receive work specified in other sections.

H. Connections, General: Component parts of built-up members shall be well-pinned with closely-fitted contact. Conceal connections where possible. Otherwise, make countersinks for concealment after fabrication, except where noted.

I. Joints, General: Fit or miter to hairline tolerances. Provide lugs, clips, anchors and miscellaneous fastenings necessary for complete assembly and installation. Component parts of built up members shall be well pinned with closely fitted contact.

1. Joints on finished surfaces: Provide welds ground smooth and filled.

2. Joints exposed to weather or water: Form joints to exclude water or provide weep holes where water may accumulate.

3. Sheet metal joints: Hem exposed edges.

4. Bolted and Screwed Connections: Provide holes and connections for Work specified in other sections. Use bolts for field connections only. Provide washers under heads and nuts bearing on wood. Draw all nuts tight and nick threads of permanent connections. Use beveled washers where bearing is on sloped surfaces. Where screws must be used for permanent connections in ferrous metal, use flat head type, countersunk, with screw slots filled and finished smooth and flush.

J. Embedded Fabrications: For embedment in concrete, provide weld on lugs or anchors as detailed or required.

K. Brazing: Brazing shall be of adequate strength and durability with joints tight and flush, smooth and clean. All exposed surfaces shall be ground and finished flush, free of brazing discoloration and other marks. Brazing on finished surfaces shall be indistinguishable from parent metal.

L. Welding: Conform to AWS D1.1. Do not field weld galvanized components to remain unfinished. Grind welds smooth and flush with base material. Re weld to fill holes. Putties and fillers will not be accepted.

M. Light Structural Steel Framing Fabrications: Unless otherwise indicated, fabricate units from structural steel shapes, plates, and steel bars, with continuously welded joints and smooth exposed edges.

1. General: Design of fabrications shall be by licensed Professional Engineer, registered in the State of California. Fabricate structural steel members in accordance with AISC Specifications and the Uniform Building Code (UBC), Chapter 22.

2. Shop Connections: Make welded connections in accordance with AWS D1.1.

3. Welding shall be done in the shop unless otherwise indicated.

4. All shop welding shall be continuously inspected.

5. Field Connections: Provide bolted connections, except where welded connections are indicated.

6. Column Bases: Provide base plates shop welded to columns.

7. Weld Finishing: Grind and dress smooth all welds exposed in finished Work to preserve shape and profile of welded item.

8. Shop Painting: Shop prime all structural steel, except steel to be encased in concrete or to be fireproofed. Apply one-coat shop primer paint system in accordance with SSPC Paint System PS 7.01.

N. Steel Tubing and Piping Fabrications: Close ends with plate stock, no exposed ends; grind edges.

O. Shop Assembly: Pre-assemble items in shop to greatest extent possible to minimize field splicing and assembly.

1. Disassemble units only as necessary for shipping and handling limitations.

2. Use connections that maintain structural value of joined pieces.

3. Clearly mark units for reassembly and coordinated installation.

2.9 Galvanizing:

A. Galvanizing, General:

1. Ferrous metal fabrications shall be galvanized only as specified or noted on the Plans.

2. Where galvanized finish is specified or noted, ferrous fabrications shall be galvanized in accordance with applicable referenced ASTM standards, after fabrication.

3. Galvanizing shall be by hot dip method only, unless otherwise specified.

B. Product Fabrication, General: Fabricate products to be galvanized in accordance with Recommended Details for Galvanized Structures by American Hot Dip Galvanizers Association, Inc.

1. Comply with applicable portions of ASTM A143, A384 and A385, except as otherwise specified herein. Avoid techniques which could cause distortion or embrittlement of steel.

2. Notify Engineer before and during submittals review and before fabrication proceeds, of potential warpage problems which may require design modification.

C. Product Preparation for Galvanizing:

1. Remove welding slag and burrs.

2. Provide holes and lifting lugs as necessary for handling during galvanizing process and only at positions approved by Engineer.

3. Remove grease, oil, paint and other deleterious materials.

4. Do not use unsuitable marking paints on steel prior to galvanizing.

5. Use blast cleaning or other method as necessary if surface contaminants and coatings cannot be removed by normal chemical cleaning process.

D. Surface preparation:

1. Pre-clean using caustic bath, acid pickle and flux.

2. Alternatively, pre-clean by blast cleaning and fluxing.

3. Conform to ASTM A123 and A386, as applicable, for steel members, fabrications and assemblies.

4. Conform to ASTM A153 for bolts, nuts and washers, and steel hardware components.

5. Conform to ASTM A143 for protection against embrittlement.

E. Galvanizing Bath: Use not less than 98.0 percent zinc.

F. Zinc Coating Weight: Conform to Paragraph 6.1 of ASTM A123, Table 1 of ASTM A153 and Table 1 of ASTM A386, as applicable.

G. Zinc Coating Surface Finish: Wipe down surfaces after dip to remove pin holes, scale, drips, runs and points. Finish shall be continuous, adherent, smooth and evenly distributed, free from defects detrimental to intended end use and finishing of coated product.

H. Zinc Coating Adhesion: Adhesion shall be sufficient to withstand normal handling during transport and erection.

I. Cold Galvanizing Compound: High zinc dust content paint for regalvanizing welds in

galvanized steel, with dry film containing not less than 94 percent zinc dust by weight, and complying with DOD-P-21035 or SSPC-Paint-20; ZRC Zinc Rich Coating, or approved equal.

J. Portions Not to Receive Galvanizing: Protect portions of parts to be embedded in concrete from galvanizing, except galvanize anchors and sleeves built into concrete.

2.10 Metalized Finish

A. Fabrication: Miscellaneous metal work which will be exposed to view shall only be fabricated with materials that are smooth and free of surface blemishes, including pitting, seam marks, trade names and roughness. Remove such blemishes by grinding or by welding and grinding prior to cleaning, treating, or applying surface finishes.

B. Shop Assembly: Work shall be fitted, shop assembled, and ready for erection whenever possible.

C. Workmanship: Form metals to shape and size with sharp lines and angles, and with smooth surfaces and faces free from distortion. Mill fastening to a close fit. Do all fitting true to line. Bend or form all tubing, pipe, and other members to continuous and true curves with all joints flush and neatly fastened together. All fabrications shall be square, plumb, straight, and true.

D. Jointing and Connections: Jointing and intersections shall be accurately made in true planes and tightly fitted to hairline joints. Connections shall be welded. Do not use screws unless specifically shown or required - if used, screws shall be countersunk with a metal compatible with the members being joined.

E. Welding: Welding shall conform to the requirements of the "Structural Welding Code" ASW D1.I. Where welds are exposed to views, bevel members prior to welding and weld full. Grind welds flush, smooth, level with the adjacent surfaces. Grind welds at intersecting members to sharp lines. Galvanized metal welds shall be steel brushed to remove excess residue. Touch up by brushing or spraying galvanized gray primer.

F. Holes: Accurately space to centers such that boles are not poorly or carelessly seamed.

G. Anchorage: Fabricate and space anchoring devices to provide adequate support for intended use.

H. Insulation of metals from contact with masonry and different metals from contact with each other shall be provided where necessary to prevent corrosion.

I. Debur and grind smooth all welds and rough spots.

J. All ornamental metal fabrications shall receive a sandblast finish to remove all oil, grease, lint, and rust.

K. All ornamental metal fabrications shall receive 91-2 mil. zinc thermal sprayed metalized finish per ANSI/AWS C218.93, ASTM C633, ASTM B833-93, and SSPC-CS Guide 23.00, June 1, 1991. Contact: Zinc Nation Inc. (714) 239-6190 www.zincnation.com. Contractor shall submit sample of metalizing for review and approval prior to metalizing ornamental metal items.

L. Coating System

1. Manufacturer

a. Tnemec Company Incorporated, 417 East Weber Street, Compton, CA 90222. Phone 310-637-2363. Fax 310-637-4161. Web Site www.tnemec.com.

b. Equivalent materials of other manufacturers may be substituted only by approval of the architect. Requests for substitution shall include manufacturer's literature for each product giving the name, generic type, descriptive information solids by volume, recommended film thicknesses and a list of five projects where each product has been used and rendered satisfactory service. No request for substitution shall be considered that would decrease the film thickness or offer a change in the generic type of coating.

2. Coating System Type

a. System Type:. Hydrophobic Arcylic / HDP Pure Arcylic
b. Surface Preparation: Zinc thermal sprayed metalized finish
c. Prime Coat: One coat Tnemec Intermediate, 115, 3 to 5 mils. DFT.[4]
d. Finish coat: One coat Tnemec Urethane, 1028 or 1029, 2 to 3 mils.

3. Finish Color: 'Dove Gray' (38GR)

2.11 Shop Painting:

A. Shop Priming and Painting, General: Conform to SSPC Painting Manual.

B. Products to be Primed: Prime paint after fabrication all parts not otherwise shown as galvanized, stainless steel, anodized aluminum, polished brass or embedded in concrete.

C. Preparation for Priming: Prepare all surfaces to be coated, as follows.

1. Solvent-clean in accordance with SSPC-SP 1.

2. Exterior fabrications: Clean in accordance with SSPC-SP 6.

3. Interior fabrications: Clean in accordance with SSPC-SP 6.

D. Shop Priming: Comply with SSPC-PA 1.

1. Apply primer immediately following surface preparation.

2. Do not prime surfaces to be welded.

3. Do not prime surfaces in direct contact bond with concrete or mortar.

4. Spray apply shop prime without holidays, drips, runs.

5. Provide two coats where product will not be finish painted or will be concealed in completed work.

6. Apply an additional coat to corners, welds, edges, and fasteners.

E. Drying: Allow paint to dry before handling.

F. Steel Embedded in Concrete: Coat concealed faces with asphalt paint.

G. Galvanizing Pre-Treatment: Where zinc-coated surfaces are specified to be shop primed, chemically treat surfaces to provide bond for paint before applying primer.

H. Shop Applied Finish Painting: Apply thermosetting enamel paint, gloss or semi gloss, of a type and color as selected and approved by Engineer, if not otherwise specified.

1. Shop applied finish paint shall be baked to set and cure.

2. Allow finish paint to thoroughly dry and cure before handling.

2.12 Rough Hardware:

A. Rough Hardware, General: Provide bent or otherwise custom fabricated bolts, plates, anchors, hangers, dowels, and other miscellaneous steel and iron shapes as indicated on Plans.

B. Rough Hardware Fabrication: Fabricate items to sizes, shapes, and dimensions required. Provide malleable-iron washers for heads and nuts which bear on wood structural connections; elsewhere, furnish steel washers.

2.13 Loose Bearing and Leveling Plates:

A. Loose Bearing and Leveling Plates: Provide loose bearing and leveling plates for steel items bearing on concrete construction, made flat, free from warps or twists,

and of required thickness and bearing area. Drill plates to receive anchor bolts and for grouting as required. Galvanize fabrications after fabrication.

2.14 Toilet Room Entrance Gates:

A. Toilet Room Entrance Gates: Metal grill gates, fabricated from stock steel shapes as detailed on Plans, hot-dipped galvanized finish after fabrication, with galvanized sheet steel panel infill at lockset.

B. Gate Hardware: As indicated on Plans, welded-on heavy weight butt hinges, minimum 3-hinges per gate leaf, hot-dipped galvanized finish.

2.15 Other Fabrications:

A. Other Fabrications: Provide fabrications not specifically described but required for a complete and proper installation, as selected by the Contractor, subject to approval of the Engineer.

PART - 3 EXECUTION

3.1 Preparation:

A. Preparation for Cutting and Fitting: Obtain Engineer's review prior to site cutting or making adjustments not indicated.

B. Welding Preparation: Clean and strip site primed steel items to bare metal where site welding is indicated.

C. Blocking and Bracing: Make provision for erection loads with temporary bracing. Keep work in alignment.

D. Coordination with Cast in Place Concrete: Furnish setting templates and place items required to be cast into concrete, as specified in Section 03 21 00 - Reinforcing Steel.

3.2 Installation, Typical:

A. Installation, General: Install items plumb and level, accurately fitted, free from distortion or defects.

B. Field Welding: Perform field welding in accordance with AWS D1.1.

3.3 Cleaning and Touch-Up:

A. Cleaning: Perform initial cleaning immediately after completion of installation. Prepare surfaces for finish painting as specified in Section 09 90 00 – Interior and Exterior Painting.

B. Galvanizing Touch-Up: Touch up galvanizing immediately after installation, including field welding. Prepare surface and apply cold galvanizing compound in compliance with the manufacturer's instructions and recommendations.

C. Primer Paint Touch-Up: Immediately after erection or installation, touch up shop paint. Use products as specified in Section 09 90 00 – Interior and Exterior Painting

1. Clean field welds, bolted joints, and areas where primer is damaged.

2. Clean and primer paint welds and surrounding areas affected by welding.

3. Paint with material used for shop painting, minimum 3 mils dry film thickness.

D. Painting of Metal Fabrications:

1. Exposed interior and exterior ferrous metal fabrications shall be coated (painted) as specified in Section 09 90 00 – Interior and Exterior Painting

3.4 Coatings System Application for Metalized Finish

A. Application

1. Apply coatings in accordance with manufacturer's instructions.

2. Mix and thin coatings, including multi-component materials, in accordance with manufacturer’s instructions.

1. Keep containers closed when not in use to avoid contamination.

4. Do not use mixed coatings beyond pot life limits.

5. Use application equipment, tools, pressure settings, and techniques in accordance with manufacturer’s instructions.

6. Uniformly apply coatings at spreading rate required to achieve specified DFT.

7. Apply coatings to be free of film characteristics or defects that would adversely affect performance or appearance of coating systems.

8. Stripe paint with brush critical locations on steel such as welds, corners, and edges using specified primer.

B. Repair

1. Materials and Surfaces Not Scheduled To Be Coated: Repair or replace damaged materials and surfaces not scheduled to be coated.

2. Damaged Coatings: Touch-up or repair damaged coatings. Touch-up of

minor damage shall be acceptable where result is not visibly different from adjacent surfaces. Recoat entire surface where touch-up result is visibly different, either in sheen, texture, or color.

3. Coating Defects: Repair in accordance with manufacturer's instructions coatings that exhibit film characteristics or defects that would adversely affect performance or appearance of coating systems.

C. Cleaning

1. Remove temporary coverings and protection of surrounding areas and surfaces.

D. Protection of coating systems

1. Protect surfaces of coating systems from damage during construction.

END OF SECTION

SECTION 05 51 00

METAL STAIRS

PART 1 - GENERAL

1.1 SUMMARY

A. Section Includes: Provide steel stairs and landings, with stair handrails, and including plates, angles, hangers and struts for securing to building structure.

1. Provide additional steel as required for support of stairs and not otherwise indicated on Architectural or Structural Drawings.

2. Precast Concrete Treads: Metal stair systems include metal support systems with precast concrete stair treads.

B. Related Work:

1. Section 05 50 00: Metal handrails other than steel stair rails.
2. Section 05 73 00: Decorative metal railings.
3. Section 05 73 10: Cantilevered glass railings.

1.2 ADMINISTRATIVE REQUIREMENTS

A. Design/Build: Provide special engineering for stairs and railings to ensure compliance with applicable codes and Contract Documents.

1.3 REFERENCES

A. American Welding Society (AWS): D1.1, Structural Welding Code.

B. National Association of Architectural Metal Manufacturers (NAAMM):

1. Metal Stairs Manual.
2. Pipe Rail Manual.
3. Heavy Duty Metal Bar Grating Manual.

1.4 SUBMITTALS

A. Product Data: Submit manufacturer's literature for products used in stair and rail fabrications, including paint, grout, and rail brackets.

B. Shop Drawings: Submit for fabrication and erection of stairs and handrails. Indicate profiles, sizes, connection, reinforcing, and anchorage.

1. Provide templates for anchorage installation by others.

C. Design/Build Certificates: Submit certification signed by California licensed structural engineer indicating compliance with Contract Documents and code requirements.

1.5 QUALITY ASSURANCE

A. Fabricator Qualifications: Firm with not less than five years successful experience fabricating custom stairs for projects of similar size and scope.

PART 2 - PRODUCTS

2.1 MATERIALS

A. System Requirements: Provide steel stairs and landings, with stair handrails, and including plates, angles, hangers and struts for securing to building structure.

B. Regulatory Requirements, General: Comply with requirements of applicable codes for stair and railing design, except where more restrictive codes are specified.

C. Regulatory Requirements, Access: Comply with California Building Standards Code and Americans with Disabilities Act (ADA) Standards for access for persons with disabilities.

D. Regulatory Requirements, Slip-Resistance:

1. Slip-Resistant Hard Surfaces: Hard surface finishes to comply with requirements of authorities having jurisdiction for slip-resistant hard surfaces, including general code requirements and requirements for access for persons with disabilities.

a. Refer to Section 01 41 10 – Slip-Resistant Hard Surfaces. Hard surfaces include flooring and paving.

b. Manufacturer Representatives to verify each hard surface material provided for Project complies with Section 01 41 10 for slip-resistance based on each location hard surface materials are indicated in Project.

c. Subcontractor/Installer to verify hard surface material being installed has either manufacturer testing information indicating materials are suitable for locations indicated, or experience indicates such materials are appropriate.

d. Notify Architect where hard surface materials may not be appropriate for applications indicated.

E. Design Requirements: Design stairs and railings to support following minimum loads.

1. Stairs: 100-psf loads, with individual stair treads designed to support a 300-pound concentrated load placed in a position which would cause maximum stress.

2. Railings: Support a lateral force of 50 lbs./lin. ft. uniform load and 200-lbs. at any single point without permanent set or damage; ASTM E935.

a. Top Rails: Design to support minimum 300-lb. concentrated single point load applied at any point vertically or horizontally.

F. Steel Sections, Plates, Shapes and Bars: ASTM A36.

1. Steel Bar Grating: ASTM A36 or ASTM A1011.

G. Structural Steel Sheet: Hot rolled, ASTM A1011; or cold rolled, ASTM A1008, Class 1; or grade required for design loading.

H. Steel Pipe: ASTM A53, Type S seamless, grade as selected by fabricator and as required for design loading; minimum standard weight, STD or Schedule 40.

I. Steel Tubing: Cold formed ASTM A500; or hot rolled, ASTM A501; minimum Grade B; seamless where exposed.

J. Castings: Gray iron, ASTM A48, Class 30; malleable iron, ASTM A47.

K. Concrete Inserts: Threaded or wedge type; galvanized ferrous castings, either malleable iron ASTM A47, or cast steel ASTM A27. Provide bolts, washers and shims as required, hot-dip galvanized, ASTM A153.

L. Grout: Non-shrink meeting ASTM C1107, non-metallic, pre-mixed, factory-packaged, non-staining, non-corrosive; type specifically recommended by manufacturer as applicable to job condition.

M. Fasteners and Rough Hardware: Type required for specific usage; provide zinc-coated fasteners for exterior use or where built into exterior walls.

N. Welding Materials: AWS D1.1, type required for materials being welded.

O. Paint: Provide primers as recommended by paint manufacturers for substrates and paints specified in Section 09 90 00 – Painting and Coating.

1. Galvanizing Repair Paint: High zinc-dust content paint for repair of welds in galvanized steel.

2.2 FABRICATION

A. Stairs: Comply with requirements of NAAMM "Metal Stair Manual", including components required for proper anchorage of metal stairs.

1. Types of Stairs: Refer to Drawings.

2. Stair Class: NAAMM Architectural Class.

3. Precast Concrete Tread Stairs: Provide minimum 5000 psi precast concrete treads shaped to provide integral tread and riser unit; conform to ACI 318 and Prestressed Concrete Institute MNL 117.

a. Treads: Non-slip finish.

4. Provide with abrasive nosing, 2" wide, contrasting color to tread.

B. Stair Railings: As indicated and as required by applicable codes and standards; comply with NAAMM "Pipe Railing Manual"; welded construction; cap exposed ends.

1. Handrail: Seamless steel tube, 1-1/2" outside diameter, continuous railings conforming to applicable code and design requirements.

2. Wall Rail Brackets: Castings as approved by Architect.

3. Wall Returns: 90° elbow return with 1/4" maximum clearance unless otherwise indicated.

    a. Provide wall plates only where indicated and where required by applicable codes.

C. Fabricate stairs, landings and component connections to support live loads specified.

1. Provide closed riser stairs with nosing joined flush to riser.

2. Maximum Allowable Deflection:

    a. Standard: Maximum L/240.
    b. Where Underside of Stair is Finished: Maximum L/360.

3. Stringers: As indicated on Drawings; Contractor option where not otherwise indicated.

4. Reinforce underside of landings.

D. Fabricate items with joints neatly fitted and properly secured.

E. Grind exposed welds continuous, smooth and flush with adjacent finished surfaces, and ease exposed edges to approximate 1/32" uniform radius.

F. Exposed Mechanical Fastenings: Flush countersunk fasteners unobtrusively located, consistent with design of structure.

G. Fit and shop assemble in largest practical sections for site delivery.

H. Make exposed joints flush butt type, hairline joints where mechanically fastened.

1. Fabricate joints exposed to weather in manner to exclude water or provide weep holes where water could accumulate.

I. Supply components required for proper anchorage of metal stairs.

J. Fabricate anchorage and related components of same material and finish as metal stairs and rails.

K. Thoroughly clean surfaces of rust, scale, grease and foreign matter prior to applying finish.

L. Supply components required for proper anchorage of metal fabrications; fabricate anchorage and related components of same material and finish as metal fabrication.

M. Finishes: Thoroughly clean surfaces of rust, scale, grease and foreign matter prior to applying finish. Do not shop prime surfaces in contact with concrete or requiring field welding; shop prime in one coat.

1. Exterior Stairs and Rails: Hot dip galvanize and prime paint.

a. Provide minimum ASTM A123 or A924 and A653 G90 galvanized coating; iron and steel hardware galvanized conforming to ASTM A153.

2. Prime Painting: Comply with requirements of Section 09 90 00 – Painting and Coating for preparation and priming.

N. Finishes: Prime paint metal surfaces. Thoroughly clean surfaces of rust, scale, grease and foreign matter prior to applying finish. Do not shop prime surfaces in contact with concrete or requiring field welding; shop prime in one coat.

1. Prime Painting: Comply with requirements of Section 09 90 00 – Painting and Coating for preparation and priming.

PART 3 - EXECUTION

3.1 EXAMINATION

A. Field Measurements: Take field measurements prior to preparation of shop drawings and fabrication, where possible; do not delay job progress; allow for trimming and fitting where necessary.

1. Verify clearances, including code required head height clearances.

3.2 INSTALLATION

A. Obtain Architect's review prior to site cutting and adjusting not part of scheduled work.

1. Perform necessary cutting and altering for installation of work of other sections.

B. Install steel stairs and railings square and level, plumb and free from distortion or defects detrimental to appearance and performance.

C. Make provision for erection stresses by temporary bracing; keep work in alignment.

D. Ensure alignment with adjacent construction; coordinate with related work to ensure no interruption in installation.

E. Field bolt and weld to match standard of shop bolting and welding; hide bolts and screws whenever possible, where not hidden, use flush countersunk fastenings.

1. Perform field welding in accordance with AWS D1.1.

F. After installation, touch-up field welds and scratched and damaged surfaces; use primer consistent with shop coat or recommended for galvanized surfaces, as applicable.

G. Replace items damaged in course of installation and construction.

END OF SECTION

SECTION 05 70 00

DECORATIVE METAL

PART 1 - GENERAL

1.1 SUMMARY

A. Section Includes: Provide decorative (ornamental) metal items including attachment devices and accessories, as required for complete, finished installation.

1. Provide custom stainless-steel railings.

B. Related Work:

1. Section 05 50 00: Metal fabrications including steel railings.
2. Division 14: Decorative metal at elevators.
3. Section 32 31 20: Decorative metal fences and gates.

1.2 REFERENCES

A. National Association of Architectural Metal Manufacturers: Metal Finishes Manual.

B. Builders Hardware Manufacturers Association (BHMA): BHMA 1301/ ANSI A156.18 Standard for Materials and Finishes.

1.3 ADMINISTRATIVE REQUIREMENTS

A. Design/Build: Provide special engineering to ensure compliance with applicable codes and Contract Documents.

B. Pre-Installation Meeting: Convene not less than one week prior to commencing work of this Section. Require attendance of those directly affecting work of this Section.

1. Review installation procedures and coordination required with related work.

1.4 SUBMITTALS

A. Product Data: Furnish manufacturer's literature including recommendations for cleaning.

B. Shop Drawings: Show detailing including anchorage, accessories, and supporting members.

C. Samples: Furnish samples of each exposed metal finish.

D. Design/Build Certificates: Submit engineer certification by California licensed structural engineer indicating decorative metal complies with Contract Documents and applicable code requirements.

1.5 QUALITY ASSURANCE

A. Fabricator Qualifications: Firm with minimum five years successful experience fabricating decorative metal items like those required for Project.

PART 2 - PRODUCTS

2.1 MATERIALS

A. System Description: Provide decorative (ornamental) metal items specified including attachment devices and accessories.

B. Rail Regulatory Requirements:

1. Access: Comply with California Building Standards Code and Americans with Disabilities Act (ADA) Standards for railing design to provide access for persons with disabilities.

2. Building Code: Comply with requirements of applicable building codes for railing design, except where more restrictive codes are specified.

C. Design Requirements, General: Drawings indicate decorative metal sizes and shapes; unless otherwise specifically indicated, design components and fabrications of gages and thicknesses to withstand anticipated loads.

1. Cladding: Where permitted, cladding to be minimum 0.025" thick unless otherwise approved in advance.

D. Rail Design Requirements: Design railings to support following minimum loads.

1. Railings: Support a lateral force of 50 lbs./lin. ft. uniform load and 200 lbs. at any single point without permanent set or damage; ASTM E935.

a. Top Rails: Design to support minimum 300 lb. concentrated single point load applied at any point vertically or horizontally.

E. Galvanized Steel

F. Concrete Inserts: Threaded or wedge type; galvanized ferrous castings, either malleable iron ASTM A47, or cast steel ASTM A27.

1. Provide bolts, washers and shims as required, hot-dip galvanized, ASTM A153.

G. Grout: Non-shrink meeting ASTM C1107, non-metallic, pre-mixed, factory-packaged, non-staining, non-corrosive; type specifically recommended by manufacturer as applicable to job condition.

1. Manufactures:

a. Master Builders/Masterflow 713.
b. Five Star Products, Inc./Five Star Grout.
c. Bostik Construction Products/Upcon Grout.
d. Protex Industries, Inc./Propak.
e. Substitutions: Refer to Section 01 25 00.

H. Brackets and Anchors: Unexposed plates, angles and supports may be steel; exposed items to match decorative metal type and finish.

I. Fasteners: Type required for specific usage; provide concealed fasteners except where specifically approved; where exposed match type and finish of metal being fastened.

1. Concealed Steel Fasteners: Hot-dipped galvanized minimum G90 where built into exterior walls or subject to high humidity.

2.2 FABRICATION

A. Stainless Steel Countertops: Not less than 16-gage, with No. 4 satin directional polish finish.

1. Fabricate to furniture quality construction, assembled and welded in manner consistent with recognized steel furniture standards; grind joints smooth and flush and finish to match adjacent finish on exposed surfaces.

2. Provide maximum sizes available. Locate butt joints at least 2'-0" from cutouts where more than one-piece countertops are required.

a. Make corners and joints hairline; slightly bevel arises.

3. Fabricate corners, joints, and finish such that no gaps, spaces, cavities, crevices, or inaccessible spaces or areas are present in which dirt, dust, debris, or moisture can accumulate.

4. Provide cutouts for inserts, fixtures and fittings; verify locations from on-site dimensions.

5. Sound Deadening: Heavy-bodied resinous coating, filled with granulated cork or other resilient material, compounded for permanent, non-flaking adhesion to metal in 1/8" thick coating.

a. Apply coating of sound deadening material to underside of tops, drainboards, dishtables and sinks.

B. Fabricate component connections to support specified design loads.

C. Select materials for straightness, free of defects and irregularities.

1. Exposed-to-view surfaces exhibiting pitting, seam marks, roller marks, "oil canning," stains, discolorations, and imperfections on finished units are not acceptable.

D. Make exposed joints flush butt type, hairline joints where mechanically fastened; provide concealed connection devices with hidden fasteners.

1. Fabricate continuous items with joints neatly fitted and secured.

2. Ease exposed edges to approximate 1/32" uniform radius.

3. Fabricate joints exposed to weather in manner to exclude water or provide weep holes where water could accumulate.

E. Comply with AWS for recommended practices in welding each type of material; provide welds behind finished surfaces without distortion or discoloration on exposed side; dress exposed and contact surfaces.

F. Exposed Mechanical Fastenings: Flush countersunk fasteners unobtrusively located, consistent with design of structure.

G. Fit and shop assemble in largest practical sections for site delivery.

H. Separate dissimilar materials with bituminous paint where concealed, with preformed separators, or similar method to prevent corrosion.

I. Decorative Steel Field Finishes: Galvanize and prime paint exterior work and prime paint interior work unless otherwise noted in Schedule; comply with requirements of Section 09 90 00 - Painting and Coating for preparation and priming.

1. Thoroughly clean surfaces of rust, scale, grease and foreign matter prior to applying finish.

2. Do not shop prime surfaces in contact with concrete or requiring field welding; shop prime in one coat.

3. Galvanized Coating: Provide coating comparable to ASTM A924 and A653, minimum G90 hot dip galvanized coating.

PART 3 - EXECUTION

3.1 EXAMINATION

A. Field Measurements: Take field measurements prior to preparation of shop drawings and fabrication, where possible; do not delay job progress; allow for trimming and fitting where necessary.

3.2 INSTALLATION

A. Install decorative metal items in accordance with manufacturer's recommendations, installation instructions, and approved shop drawings.

B. Install plumb, true and in correct relation to adjacent work, free from distortion or defects detrimental to appearance and performance.

C. Prior to securing continuous items, adjust to ensure proper matching at butt joints and correct alignment throughout their length.

D. Tolerances: Accurately align and locate components to column lines and floor levels; adjust work to conform to following tolerances.

1. Plumb: 1/8" in 10'-0"; 1/4" in 40'-0"; non-cumulative.

2. Level: 1/8" in 20'-0"; 1/4" in 40'-0"; non-cumulative.

3. Alignment: Limit offset to 1/16" where surfaces are flush or less than 1/2" out of flush and separated by less than 2" (by reveal or protruding work); otherwise limit offsets to 1/8".

4. Location: 3/8" maximum deviation from measured theoretical location (any member, and location).

E. Install anchorage devices to securely and rigidly fasten system to building.

F. Provide anchors to be installed in other work, and setting details, in time for proper installation by trades concerned; verify correct placement.

3.3 CLEANING

A. Clean decorative metal surfaces promptly after installation of components, exercising care to avoid damage of finish.

B. Remove excess sealant compounds, dirt and other foreign substances.

3.4 PROTECTION

A. Repair or replace items damaged or marred during construction.

END OF SECTION

SECTION 06 10 50

MISCELLANEOUS ROUGH CARPENTRY

PART 1 - GENERAL

1.1 SUMMARY

A. Section Includes: Provide miscellaneous wood blocking and plywood, including blocking for roofing system and related flashing.

1. Provide plywood panel boards.
2. Preservative treat wood members as indicated.

B. Related Sections:

1. Section 06 20 00: Finish carpentry.
2. Section 06 40 00: Architectural woodwork.

1.2 REFERENCES

A. Forest Products Society (FPS): National Design Specification for Stress Grade Lumber and its Fastening.

1.3 SUBMITTALS

A. Product Data: Submit wood treatment certifications and instructions for proper use of each type of treated material.

B. Wood Product Certification: Furnish certification indicating wood products are from “well-managed” forests.

1.4 QUALITY ASSURANCE

A. Lumber Grades: Provide visible grade stamp of an agency certified by FPS.

B. Lumber Standard: Comply with US Product Standard PS20 for each indicated use, including moisture content and actual sizes related to indicated nominal sizes.

C. Plywood Standard: Comply with PS1 (ANSI A199.1).

D. Certified Wood Products: Wood products to be from forests certified “well-managed” by an agency accredited by Forest Stewardship Council (FSC) including SmartWood Program and Forest Conservation Program.

PART 2 - PRODUCTS

2.1 MATERIALS

A. System Requirements: Provide miscellaneous wood blocking and plywood, including blocking for roofing system and related flashing.

B. Regulatory Requirements: Comply with applicable code requirements for miscellaneous rough carpentry.

C. Blocking: Provide dimensional lumber graded in accordance with FPS Grading Rules; Construction Grade, Douglas Fir; minimum S-Dry.

D. Plywood: Provide minimum APA C-D exterior (CDX) plywood; stress rated where spanning between supporting members; fire retardant treated; minimum 3/4" thick unless otherwise indicated.

E. Plywood Panel Boards: Provide panel boards for electrical and communication panel boards; APA C-D plugged, interior type plywood with exterior glue, fire retardant treated; minimum 1/2" thick.

F. Nails, Spikes and Staples: Galvanized; size and type to suit application.

G. Bolts, Nuts, Washers, Lags, Pins and Screws: Medium carbon steel; galvanized; size and type to suit application.

H. Fasteners: Provide fasteners as required for complete, secure installation of miscellaneous rough carpentry.

1. Solid Masonry or Concrete: Expansion shield and lag bolt type.

2. Steel: Bolts or powder activated type.

2.2 FABRICATION

A. Wood Preservation: Treat lumber and plywood to comply with applicable requirements of American Wood Preservers Association and applicable codes.

1. Decay Resistance Treatment: Pressure treat wood in accordance with AWPA U1 using preservative chemicals acceptable to authorities having jurisdiction and containing no arsenic or chromium.

a. Treat wood members based on AWPA U1 Use Categories as appropriate to Project location and exposure.

b. Kiln-dry wood to a maximum moisture content of 19% after treatment with water-borne preservative.

2. Fire Retardant Treatment: Comply with AWPA standards for pressure impregnation with fire-retardant chemicals to achieve flame-spread rating of not more than 25 in accordance with ASTM E84 or UL Test 723.

a. Treat interior wood and plywood complying with applicable code requirements for Interior FRTW.

1) Exterior Type: Where indicated for exterior applications, provide fire treated wood passing ASTM D2898 rain test.

b. Provide UL label on each piece of fire-retardant wood and plywood.

c. Kiln-dry treated items to maximum moisture content of 19%.

3. Complete fabrication of treated items prior to treatment, wherever possible; if cut after treatment, coat cut surfaces with heavy brush coat of same chemical used for treatment.

4. Inspect each piece after drying and discard damaged and defective pieces.

PART 3 - EXECUTION

3.1 PLACEMENT

A. Place miscellaneous rough carpentry true to lines and levels.

B. Correlate location so attached work will comply with design requirements and be properly located.

C. Construct members of continuous pieces of longest possible lengths.

D. Fit carpentry work to other work; scribe and cope as required for accurate fit.

E. Shim with metal or slate for bearing on concrete and masonry.

F. Securely attach carpentry work to substrates by anchoring and fastening as required by recognized standards.

1. Provide washers under bolt heads and nuts in contact with wood.

G. Wood Blocking: Provide blocking of S4S lumber not less than 1-1/2" wide and of thickness required to provide adequate support or to properly locate attached material.

1. Provide attachment to other work; form to shapes shown.

2. Countersink bolts and nuts flush with surfaces.

3. Remove temporary blocking when no longer needed.

4. Anchor to formwork before concrete placement.

5. Build into masonry as work progresses, cutting to fit masonry unit size involved.

H. Plywood: Comply with recommendations of American Plywood Association (APA) for fabrication and installation of plywood work.

END OF SECTION

SECTION 06 18 00

STRUCTURAL GLUED LAMINATED TIMBER

PART 1 - GENERAL

1.01 SUMMARY

A. Provisions of Division 01 apply to this section.

B. Section Includes:

1. Glued Laminated Wood Beams

C. Referenced Standards

1. ANSI/ AITC Standard A190.1 and ASTM D3737
2. NDS- National Design Specification for Wood Construction.
3. PS-56 Structural Glued Laminated Timber
4. California Code of Regulations, Title 24, Part 2, California Building Code Chapter 23
5. ASTM D3024 – Dry Use Adhesive with Protein Base, Casein Type. ASTM D2559- Wet Use Adhesive. APA Specification AFG-01 – Adhesive for Field Gluing Plywood to Wood Framing.

1.02 DEFINITIONS

A. Structural Glued-Laminated (Glulam) Timber: An engineered, stress-rated timber product assembled from selected and prepared wood laminations bonded together with adhesives and with the grain of the laminations approximately parallel longitudinally.

1.03 SUBMITTALS

A. Shop Drawings: Show layout of structural glued-laminated timber system and full dimensions of each member. Indicate species and laminating combination, adhesive type, and other variables in required work. Including large-scale details of connections.

1.04 QUALITY ASSURANCE

A. Manufacturer Qualifications: Provide factory-glued structural units produced by an AITC- or APA-licensed firm.

B. Factory mark each piece of structural glued-laminated timber with AITC Quality Mark or APA trademark. Place mark on surfaces that will not be exposed in the completed work.

C. Quality Standard: Comply with AITC A190.1, "Structural Glued Laminated Timber."

1.05 DELIVERY, STORAGE, AND HANDLING

A. General: Comply with provisions in AITC 111, "Recommended Practice for Protection of Structural Glued Laminated Timber during Transit, Storage, and Erection."

B. Individually wrap members using plastic-coated paper covering with water-resistant seams.

PART 2 - PRODUCTS

2.01 STRUCTURAL GLUED-LAMINATED TIMBER

A. General: Provide structural glued-laminated timber that complies with AITC 117--MANUFACTURING or research/evaluation reports acceptable to authorities having jurisdiction. Provide structural glued-laminated timber made from a single species.

B. Species and Grades for Structural Glued-Laminated Timber: Provide structural glued-laminated timber made from Douglas fir-larch that complies with combination symbols indicated.

C. Appearance Grade: Architectural appearance grade, complying with AITC 110.

D. Adhesive: Wet-use type complying with ASTM D 2559.

E. End Sealer: Manufacturer's standard, transparent, colorless wood sealer that is effective in retarding the transmission of moisture at cross-grain cuts and is compatible with indicated finish.

F. Penetrating Sealer: Manufacturer's standard, transparent, penetrating wood sealer that is compatible with indicated finish.

2.02 FABRICATION

A. Shop fabricate for connections to greatest extent possible, including cutting to length and drilling bolt holes. Dress exposed surfaces to remove planning or surfacing marks and to provide a finish equivalent to that produced by machine sanding with No. 120 grit sandpaper.

B. Camber: Fabricate horizontal and inclined members of less than 1:1 slope with either circular or parabolic camber equal to 1/500 of span.

C. End-Cut Sealing: Immediately after end-cutting each member to final length, apply a saturation coat of end sealer to ends and other cross-cut surfaces, keeping surfaces flood-coated for not less than 10 minutes.

D. Seal Coat: After fabricating, sanding, and end-coat sealing, apply a heavy saturation coat of penetrating sealer on surfaces of each unit.

2.03 COMBINATION AND APPERANCE GRADE:

A. AITC 24F-V4 & 24F-V8 in conformance with AITC 110.

B. Appearance of Members: Industrial Grade where concealed, Architectural Grade surfaced all sides where exposed.

C. Unit shall be fabricated for wet use.

PART 3 – EXECUTION

3.01 EXAMINATION

A. Examine substrates in areas to receive structural glued-laminated timber, with Installer present, for compliance with requirements, installation tolerances, and other conditions affecting performance of structural glued-laminated timber. Proceed with installation only after unsatisfactory conditions have been corrected.

3.02 INSTALLATION

A. General: Erect structural glued-laminated timber true and plumb, with uniform, close-fitting joints. Provide temporary bracing to maintain lines and levels until permanent supporting members are in place.

1. Lift with padded slings and protect corners with wood blocking.

2. Install structural glued-laminated timber to comply with Shop Drawings.

3. Install timber connectors as indicated.

B. Cutting: Avoid extra cutting after fabrication. Where field fitting is unavoidable, comply with requirements for shop fabrication.

3.03 ADJUSTING

A. Repair damaged surfaces and finishes after completing erection. Replace damaged structural glued-laminated timber if repairs are not approved by Architect.

3.04 PROTECTION

A. Do not remove wrappings on individually wrapped members until they no longer serve a useful purpose including protection from weather, sunlight, soiling, and damage from work of other trades. Coordinate wrapping removal with finishing work specified in Division 9. Retain wrapping where it can serve as a painting shield.

END OF SECTION

SECTION 06 20 00

FINISH CARPENTRY

PART 1 - GENERAL

1.1 SUMMARY

A. Section Includes: Provide finish carpentry with accessories as required for complete installation.
   1. Provide Janitor closet mop holders.

B. Related Sections:

   1. Section 10 28 00 Toilet Accessories

1.2 REFERENCES

A. North American Architectural Woodwork Standards 3.1 (NAAWS).

1.3 ADMINISTRATIVE REQUIREMENTS

1.4 SUBMITTALS

A. Product Data: Submit literature for manufactured items.

1.5 QUALITY ASSURANCE

A. Sustainability Requirements: Comply with *CAL*Green requirements including those relative to finish material pollution control for adhesives, sealants, and caulks.

1.6 DELIVERY, STORAGE, AND HANDLING

A. Do not deliver materials until site conditions are adequate to receive work; protect items from weather while in transit.

PART 2 - PRODUCTS

2.1 MATERIALS

A. Janitor Closet Mop Holders: Spring loaded anti-slip mop holders with rubber cam, with three mop holders on stainless steel.

   1. Manufacturers:

      a. Bobrick Washroom Equipment, Inc./Model B-223.
      b. Bradley Corp./Model 9953.
      c. American Specialties Inc./Model 0796A.
      d. Substitutions: Refer to Section 01 25 00.

B. Anchors: Select the material, type, size and finish required by each substrate for secure anchorage; provide toothed steel or lead expansion bolt screws for drilled-in-place anchors.

2.1 FABRICATION

A. Use exposed fastening devices or nails only when approved and unavoidable; arrange neatly.

PART 3 - EXECUTION

3.1 EXAMINATION

A. Verify surfaces are ready to receive work and field measurements are as shown on shop drawings.

1. Beginning installation signifies acceptance of conditions.

B. Ensure mechanical and electrical items affecting work are properly placed, complete, and have been inspected by applicable authorities prior to commencement of installation.

3.2 INSTALLATION

A. Secure work to blocking or backing.

B. Acceptable Tolerances:

1. Variation from True Position: Maximum 1/16" at any position and maximum 1/8" in any 10'-0" length.

END OF SECTION

SECTION 06 40 00

ARCHITECTURAL WOODWORK

PART 1 - GENERAL

1.1 SUMMARY

A. Section Includes: Provide mill fabricated architectural woodwork with accessories as required for complete finished installation including cabinetwork hardware.

1. Provide plastic laminate clad cabinetwork.
2. Provide countertops.

B. Related Sections:

1. Section 06 10 50: Miscellaneous rough carpentry.

1.2 REFERENCES

A. North American Architectural Woodwork Standards, 3.1 (NAAWS).

1.3 SUBMITTALS

A. Product Data: Submit manufacturer’s literature for manufactured items.

B. Shop Drawings: Indicate materials and wood species, component profiles, fastening, joining details, finishes, and accessories.

1. Certification: Provide Woodwork Institute Certified Compliance Label on shop drawings.

1.4 QUALITY ASSURANCE

A. Sustainability Requirements: Comply with *CAL*Green requirements including those relative to finish material pollution control for adhesives, sealants, and caulks, for composite wood products formaldehyde limitations, and for paints and coatings.

B. Fabricator Qualifications: Member of Sponsor of North American Architectural Woodwork Standards with minimum five years successful experience fabricating woodwork like that required for Project.

C. Standards: Perform architectural woodwork in accordance with North American Architectural Woodwork Standards (NAAWS).

1. Certified Compliance Program (CCP): Comply with Woodwork Institute “Certified Compliance Program (CCP) as defined in NAAWS.

2. Monitored Compliance Program (MCP): Comply with Woodwork Institute “Monitored Compliance Program (MCP) as defined in NAAWS.

3. Certified Seismic Installation Program (CSIP): Comply with Woodwork Institute Certified Seismic Installation Program.

    a. Seismic Anchorage: Provide seismic anchorage for wall cabinets as required by California Code of Regulations (CCR), Title 24, Part 2.

D. Certified Wood Products: Wood products to be from forests certified “well-managed” by an agency accredited by Forest Stewardship Council (FSC).

E. Field Sample: Provide one full size field sample of base and wall cabinet and countertop, including drawer, doors and shelves.

F. Seismic Anchorage: Provide seismic anchorage for wall cabinets as required by California Code of Regulations (CCR), Title 24, Part 2.

1.5 DELIVERY, STORAGE, AND HANDLING

A. Do not deliver architectural woodwork until site conditions are adequate to receive work; protect items from weather while in transit.

1. Allow architectural woodwork shop finish to completely dry prior to delivery to site; allow materials to off-gas volatile organic compound (VOC) emissions off site.

B. Store materials indoors, in ventilated areas with constant but minimum temperature of 60-degrees F and maximum relative humidity of 25% to 55%.

C. Do not begin installation of architectural woodwork until space is fully enclosed and mechanical systems are fully operational.

1. Maintain interior installation areas at 70 degrees F and 50% to 55% relative humidity.

D. Immediately remove from site materials with visible mold and materials with mildew.

PART 2 - PRODUCTS

2.1 MATERIALS

A. System Description: Provide mill fabricated architectural woodwork with accessories as required for complete finished installation including cabinetwork hardware.

B. Plastic Laminate Finished Casework:

1. Quality: NAAWS/Custom Grade frameless, flush overlay, unless otherwise indicated.

    a. Special: Provide each single length section of casework in largest such sections as access and openings allow.

        1) Multiple self-supporting units fastened together to form larger unit allowed only where access and openings do not allow single lengths.

2. Plastic Laminates:

a. Types: NEMA LD-3.1 high pressure laminates.

1) Horizontal Surfaces: General Purpose Type, nominal 0.050".
2) Vertical Surfaces: Vertical Surface Type, nominal 0.032".
3) Unexposed Surfaces: Balanced with 0.030" melamine backing sheet.
4) Formed Surfaces: Postforming Type, nominal 0.042".

b. Manufacturers:

1) Formica Corp.
2) Wilsonart, Wilsonart Engineered Surfaces.
3) Nevamar Corp.
4) Abet Laminati Co.
5) Substitutions: Refer to Section 01 25 00.

c. Solid Color Laminates:

1) Formica Corp./ColorCore2.
2) Wilsonart, Wilsonart Engineered Surfaces/Solicore.
3) Abet Laminati Co/Solid Colors.
4) Substitutions: Refer to Section 01 25 00.

d. Chemical Resistant Laminates:

1) Wilsonart, Wilsonart Engineered Surfaces/Chemsurf.
2) Nevamar/Chemarmor Chemical Resistant Decorative Laminate.
3) Arborite/ArboChem.
4) Substitutions: Refer to Section 01 25 00.

e. Colors: Where color is not indicated on Drawings or Finish Schedule, provide custom color as directed by Architect.

3. Wood Core: Plywood or medium density fiberboard (MDF) or particleboard, with no added formaldehyde and free of toxic materials.

C. Casework Hardware: Provide casework hardware items as required for complete installation as indicated; provide types as listed in North American Architectural Woodwork Standards for casework, but no less than following types.

1. Plug-In Pin Type Shelf Supports (Transparent Finished Casework): Match BHMA A156.9 B04013 spoon type plug-in supports; provide holes 1" on center.

2. Adjustable Shelf Standards and Supports (Plastic Laminate and Opaque Painted Casework): Match BHMA A156.9 B04073 adjustable standards and B04083 closed shelf rest brackets for mortis mounting; flush mounted in cabinet.

3. Cabinet Hinges: BHMA A156.9 B01602 or B01603 frameless European concealed type, minimum 160 degree opening, with spring closer.

4. Cabinet Hinges: BHMA A156.9 B01602 or B01603 frameless European concealed type, minimum 160 degree opening, without spring closer.

5. Cabinet Hinges: BHMA A156.9 B014xx pivot (knife) type, polished chrome finish.

6. Cabinet Pulls: Back mounted wire type, 4" center to center, clear aluminum; as approved by Architect.

7. Drawer Slides: Full extension, rail mounted type, minimum 100 lb. capacity with ball-bearing rollers; self-closing.

    a. Manufacturers:

        1) Accuride.
        2) Knape & Vogt.
        3) Blum.
        4) Hettich International.
        5) Substitutions: Refer to Section 01 25 00.

8. Cabinet Locks: Pin and tumbler slide bolt lock with five pin tumblers as approved by Architect, two keys each.

9. Magnetic Catches: BHMA 156.9 B03141.

D. Quartz-Based Solid Polymer Countertops: Manufacturer's standard quartz-based polymer system with color throughout thickness; provide manufacturer recommended joint adhesive; exposed surfaces finished to match top.

1. Manufacturers:

    a. CaesarStone USA/CaesarStone.
    b. Silstone USA/Silstone Countertops.
    c. DuPont Co./Zodiaq.
    d. Cambria USA/Cambria Countertops.
    e. Substitutions: Refer to Section 01 25 00.

2. Quality: NAAWS/Premium Grade.

3. Type: Not less than 1/2" thick sheet; coordinate with bowls as indicated and as specified in Division 22.

4. Colors: Where color is not indicated on Drawings or Finish Schedule, provide custom color as directed by Architect.

2.2 FABRICATION

A. General: Fabricate architectural woodwork in accordance with specified North American Architectural Woodwork Standards.

B. Plastic Laminate: Apply plastic laminate finish in full uninterrupted sheets consistent with manufactured sizes. Make corners and joints hairline; slightly bevel arises.

1. Locate butt joints at least 2'-0" from cutouts.

2. Cap exposed edges with plastic laminate of same finish and pattern.

3. Apply laminate backing sheet to reverse side of laminate surfaces.

4. Provide cutouts for inserts, fixtures and fittings; verify locations from on-site dimensions.

5. Prime paint contact surfaces of cutouts.

C. Countertops: Provide maximum sizes available. Locate butt joints at least 2'-0" from cutouts where more than one-piece countertops are required.

1. Make corners and joints hairline; slightly bevel arises.

2. Provide cutouts for inserts, fixtures and fittings; verify locations from on-site dimensions.

3. Splashes and edges as indicated or as directed by Architect where not otherwise indicated.

D. Use exposed fastening devices or nails only when approved and unavoidable; arrange neatly.

E. Assemble woodwork in shop in sizes easily handled and to ensure passage through building openings.

PART 3 - EXECUTION

3.1 EXAMINATION

A. Field Measurements: Take field measurements prior to preparation of shop drawings and fabrication where possible; do not delay job progress, allow for trimming and fitting.

3.2 INSTALLATION

A. Install work consistent with Architectural Woodwork Standards specified quality grade, plumb, level, true and straight with no distortions.

1. Shim as required, using concealed shims.

B. Ensure mechanical and electrical items affecting architectural woodwork are properly placed, complete, and have been inspected by Architect prior to commencement of installation.

C. Secure work to grounds, stripping and blocking with countersunk, concealed fasteners and blind nailing as required for a complete installation.

D. Scribe and cut for accurate fit to other finished work.

E. Install architectural woodwork under supervision of factory-trained mechanics.

F. Attach architectural woodwork securely in place with uniform joints providing for thermal and building movements.

G. Paneling: Provide fire-treated wood stops eight feet on center at paneling where required by applicable codes when paneling is not direct applied to substrate.

H. Acceptable Tolerances:

1. Variation from True Position: Maximum 1/16" at any position and maximum 1/8" in any 10'-0" length.

2. Adjoining Surfaces of Same Material: No variation permitted.

3. Offset with Abutting Materials: Maximum 1/32".

I. Preparation for Field Finishing:

1. Sand work smooth and set exposed nails and screws.

2. Apply wood filler in exposed nail and screw indentations and leave ready to receive site-applied finishes.

3. Seal concealed and semi-concealed surfaces; brush apply only, using primer consistent with finish coats specified under Section 09 90 00 - Painting and Coating.

END OF SECTION

SECTION 07 13 00

SHEET WATERPROOFING

PART 1 - GENERAL

1.1 SUMMARY

A. Section Includes: Provide self-adhesive sheet membrane waterproofing system, including sealing joints and protrusions through waterproofing, with protective board, drainage composite covering, and accessories for complete watertight installation.

B. Related Sections:

1. Section 07 16 00: Cementitious and reactive waterproofing at elevator pits.
2. Section 07 28 00: Weather barrier/underlayment including sheet membranes.

1.2 SUBMITTALS

A. Product Data: Submit manufacturer's literature for waterproofing system and protection board.

B. Shop Drawings: Indicate flashings, joints, sealing at openings, projections, and waterproofing of holes, slots and sleeves.

C. Certificates: Submit manufacturer's representative's certification work has been installed in accordance with manufacturer's recommendations.

1.3 QUALITY ASSURANCE

A. Qualification of Installers: Minimum five years successful experience in projects of similar scope.

1.4 SITE CONDITIONS

A. Do not apply waterproofing during inclement weather or when air temperature is below 40 degrees F, except where specifically authorized by manufacturer's representative for specific materials.

B. Do not apply waterproofing to damp, dirty, dusty, or otherwise unsuitable surfaces.

1. Allow concrete surfaces to cure minimum 28 days.

1.5 WARRANTY

A. Extended Correction Period: Provide for correcting failure of system to resist water penetration except where failure is result of structural failure of building. Repair system and pay for or replace damaged materials and surfaces.

1. Hairline cracking due to temperature or shrinkage is not considered structural failure.

2. Period: Two years.

B. Manufacturer's Warranty: Submit manufacturer's warranty including special manufacturer services as required for manufacturer's warranty.

1. Period: 5 years.

2. Manufacturer's warranty shall not detract from requirements of extended correction period nor from Owner's rights under implied and expressed warranties regardless of wording of manufacturer's warranty.

PART 2 - PRODUCTS

2.1 SYSTEMS MANUFACTURERS

A. GCP Applied Technologies (Grace) / Bituthene 4000 Waterproofing System.

B. Carlisle Coatings and Waterproofing / CCW Miradri 860/861 or CCW 701

C. Polyguard Products, Inc./Polyguard No. 650

D. Meadows, W.R. Inc. / Mel-Rol

E. American Hydrotech, Inc. / VW 75

F. Substitutions: Refer to Section 01 25 00.

2.2 MATERIALS

A. System Description: Provide 60-Mil self-adhering sheet consisting of 56 mils of rubberized asphalt laminated to a 4-mil- thick, polyethylene film with release liner on adhesive side and formulated for application with primer or surface conditioner that complies with VOC limits of authorities having jurisdiction. System including sealing joints and protrusions through waterproofing, protective covering, and accessories.

B. Regulatory Requirements: Provide materials conforming to applicable air quality management district limitations on volatile organic compound (VOC) emissions.

C. Waterproofing System: System consisting of sheet membrane of rubberized asphalt and polyethylene film, total thickness approximately 60 mil, and fluid applied rubberized asphalt for sealing system.

1. Low Temperature Applications: Where temperatures are between 25 degrees F and 40 degrees F, use manufacturer's special membrane and primer for low temperature applications.

D. Primer: Manufacturer's recommended primer of applications involved; primer is required for waterproofing applications.

E. Crack and Expansion Joint Sealants: Types as recommended by waterproofing system manufacturer, compatible with waterproofing system.

F. Protective Covering:

1. Protection Board: Preformed asphalt impregnated board or similar protective cover recommended by waterproofing manufacturer.

a. Vertical Applications: Minimum 1/8" thick protective cover.
b. Horizontal Applications: Minimum 1/4" thick protective cover.

2. Drainage Composite: Formed plastic with filter fabric designed to allow penetration and drainage of water while retaining silts, soils, and similar particulate matter; type recommended by manufacturer for application.

a. Manufacturers:

1) Grace / Hydroduct 660 Drainage Composite.
2) Carlisle / CCW MiraDRAIN 8000.
3) Colbond, Inc. / Enkadrain 3611R.
4) Meadows, W. R., Inc.; Mel-Drain
5) Substitutions: Refer to Section 01 25 00.

PART 3 - EXECUTION

3.1 PREPARATION

A. Prepare surfaces in accordance with manufacturer's recommendations.

B. Ensure sleeves, curbs and projections which pass through waterproofing are properly and rigidly installed.

C. Ensure surfaces are free of cracks, depressions, waves and projections which may be detrimental to proper installation of waterproofing.

1. Repair surfaces as required by manufacturer's representative.

D. Seal cracks and expansion joints with recommended backup material and sealant; ensure proper depth-width ratio as recommended by sealant manufacturer.

E. Ensure expansion joints are sharply formed, free of broken edges and loose aggregates.

F. Clean surfaces of dust, dirt and foreign matter detrimental to proper installation of waterproofing.

G. Prime surfaces to receive waterproofing in accordance with manufacturer's recommendations.

3.2 INSTALLATION

A. Apply waterproofing in accordance with manufacturer's recommendations and installation instructions as required for watertight installation.

1. Seal joints and items projecting through waterproofing.

B. Seam Overlap: Minimum 2-1/2".

1. Stagger end laps.

C. Reinforce corners with double applications of waterproofing unless otherwise specifically recommended by manufacturer's representative.

D. Allow extra materials at joints with anticipated movement to permit movement without stressing waterproofing.

E. Roll waterproofing membrane smooth, firmly and completely to surfaces indicated, with no fish-mouths or bunches of material.

F. Inspect and repair waterproofing in accordance with manufacturer's instructions prior to application of protection board and backfill.

G. As soon as possible after installation and inspection apply protection boards and drainage composites in accordance with manufacturer's recommendations.

1. Neatly fit around pipes and penetrations.

3.3 FIELD QUALITY CONTROL

A. Site Flood Test: Test horizontal applications of waterproofing before completed membrane is covered by protection course or other work.

1. Test for leaks with 2" depth of water maintained for 24 hours; do not overload structure.

2. Repair leaks revealed by examination of substructure and repeat test until no leakage is observed.

B. Manufacturer’s Field Services: Manufacturer's representative shall inspect work of Project on regular basis and provide certification waterproofing has been installed in accordance with manufacturer's recommendations.

1. Provide unobstructed access to waterproofing work.

2. Correct defects and irregularities as advised by manufacturer's representative.

END OF SECTION

SECTION 07 14 10

COLD FLUID-APPLIED WATERPROOFING

PART 1 - GENERAL

1.1 SUMMARY

A. Section Includes: Provide cold fluid-applied membrane waterproofing system, with internal corners, and accessories as required for complete watertight installation.

1. Location: Provide fluid-applied waterproofing at planters

B. Related Work:
1. Section 09 30 00: Waterproofing beneath tile.

1.2 ADMINISTRATIVE REQUIREMENTS

A. Pre-Installation Meeting: Convene not less than one week prior to commencing work of this Section. Require attendance of those directly affecting work of this Section.

1. Review installation procedures and coordination required with related work.

1.3 SUBMITTALS

A. Product Data: Furnish manufacturer's literature, recommendations for surface conditioner, flashing, joint cover sheet and crack sealants, and temperature range for application of waterproofing.

B. Certificates: Submit manufacturer's representative's certification indicating work has been installed in accordance with manufacturer's recommendations and installation instructions.

1.4 QUALITY ASSURANCE

A. Sustainability Requirements: Comply with *CAL*Green requirements including those relative to finish material pollution control for paints and coatings.

B. Qualification of Installer: Minimum five years successful experience in projects of similar scope.

1.5 SITE CONDITIONS

A. Do not apply waterproofing during inclement weather or when air temperature is below 40 degrees F.

B. Do not apply waterproofing to damp, dirty, dusty or otherwise unsuitable surfaces.

1. Allow concrete surfaces to cure minimum 28 days.

1.6 WARRANTY

A. Extended Correction Period: Provide for correcting failure of system to resist water penetration except where failure is result of structural failure of building. Repair system and pay for or replace damaged materials and surfaces.

1. Hairline cracking due to temperature or shrinkage is not considered structural failure.

2. Period: Two years.

B. Manufacturer’s Warranty: Submit manufacturer’s warranty including special manufacturer services as required for manufacturer’s warranty.

1. Period: 5 years.

2. Manufacturer's warranty shall not detract from requirements of extended correction period nor from Owner’s rights under implied and expressed warranties regardless of wording of manufacturer’s warranty.

PART 2 - PRODUCTS

2.1 SYSTEMS MANUFACTURERS

A. Tremco Incorporated.

B. Substitutions: Refer to Section 01 25 00.

2.2 MATERIALS

A. Section Includes: Provide cold fluid-applied membrane waterproofing system with accessories.

B. Regulatory Requirements: Comply with applicable requirements limiting volatile organic compound (VOC) emissions.

1. Comply with applicable Air Quality Management District limitations for volatile organic compound (VOC) emissions.

C. Fluid-applied Waterproofing: Manufacturer’s standard fluid-applied elastomeric waterproofing membrane system as specified.

1. Horizontal Waterproofing beneath Pavers at Podium: Tremco/250GC fluid-applied waterproofing applied to thickness of 60 mils over non-occupied spaces, 90 mils thickness over occupied spaces.

a. Drainage Board: Tremco/Tremdrain 1000 drainage board over waterproofing.

2. Horizontal and Vertical Waterproofing at Planters: Tremco/250GC fluid-applied waterproofing applied to thickness of 60 mils over non-occupied spaces, 90 mils thickness over occupied spaces.

    a. Drainage Board: Tremco/Tremdrain S drainage board over waterproofing.

D. Surface Conditioners, Primers, and Accessories: Materials compatible with membrane compound; as recommended by waterproofing manufacturer.

1. Joint Cover Sheet: Uncured neoprene or woven uncoated fiberglass mesh designed for and compatible with waterproofing as recommended by system manufacturer.

2. Joint and Crack Sealant: As recommended by waterproofing manufacturer.

PART 3 - EXECUTION

3.1 PREPARATION

A. Ensure drains, sleeves, curbs and projections which pass through waterproofing are properly and rigidly installed.

B. Ensure surfaces are free of cracks, depressions, waves or projections which may be detrimental to proper installation of waterproofing; repair surfaces as required by manufacturer's recommendations.

C. Seal cracks and joints with recommended backup material and sealant. Ensure proper depth-width ratio as recommended by sealant manufacturer.

1. Rout or sawcut cracks exceeding 1/16" in width and fill with sealant.

D. Clean surfaces of dust, dirt and foreign matter detrimental to proper installation of waterproofing.

E. Metal Surfaces: Remove contaminants which may adversely affect adhesion or performance of waterproofing; apply metal primer.

F. Use drop cloths or masking to protect adjacent surfaces.

3.2 APPLICATION

A. Apply waterproofing system, including surface conditioner, primers, and accessories in accordance with manufacturer's recommendations and installation instructions.

1. Apply not less than 55-mil coat of waterproofing over cracks and joints not less than 2" on either side.

2. Allow preparatory work to cure minimum 16 hours prior to application of waterproofing membrane.

B. Seal items projecting through waterproofing.

C. Install membrane flashings and seal into membrane.

D. After complete installation, close off area to prevent unauthorized traffic or work over waterproofing.

3.3 SITE QUALITY CONTROL

A. Flood Testing: Flood test fluid-applied waterproofing; if defects are revealed, repair and repeat flood test until no defects are revealed.

1. Allow waterproofing to cure minimum 72 hours prior to flood testing.

2. Do not overload structure with flood test; if necessary, section off areas as approved by Architect.

3. Install protection board over waterproofing membrane system after system passes flood test; comply with manufacturer recommendations for installation of protection board.

B. Manufacturer’s Field Services: Manufacturer's representative shall inspect work of Project on regular basis and provide certification waterproofing has been installed in accordance with manufacturer's recommendations.

END OF SECTION

SECTION 07 16 00

CEMENTITIOUS AND REACTIVE WATERPROOFING

PART 1 - GENERAL

1.1 SUMMARY

A. Section Includes: Provide crystalline type reactive waterproofing system applied to interior (negative) side of concrete surfaces.

1. Locations: Apply at pits

1.2 SUBMITTALS

A. Product Data: Submit manufacturer's literature.

B. Certificates: Submit manufacturer's representative's certification work has been installed in accordance with manufacturer's recommendations.

1.3 QUALITY ASSURANCE

A. Qualification of Installers: Minimum five years successful experience in projects of similar scope.

1.4 SITE CONDITIONS

A. Do not apply waterproofing during inclement weather or when air temperature is below 40 degrees F.

B. Do not apply waterproofing to dirty, dusty, or otherwise unsuitable surfaces.

1.5 WARRANTY

A. Extended Correction Period: Provide for correcting failure of system to resist water penetration except where failure is result of structural failure of building. Repair system and pay for or replace damaged materials and surfaces.

1. Hairline cracking due to temperature or shrinkage is not considered structural failure.

2. Period: Two years.

B. Manufacturer’s Warranty: Submit manufacturer’s warranty including special manufacturer services as required for manufacturer’s warranty.

1. Period: 10 years.

2. Manufacturer's warranty shall not detract from requirements of extended correction period nor from Owner’s rights under implied and expressed warranties regardless of wording of manufacturer’s warranty.

PART 2 - PRODUCTS

2.1 SYSTEMS MANUFACTURERS

A. Xypex/Concentrate, with the "Architectural Finish".

B. Vandex, Inc./Super.

C. Kryton Group of Companies/Krystol T1 and T2.

D. Substitutions: Refer to Section 01 25 00.

2.2 MATERIALS

A. System Description: Provide crystalline type reactive waterproofing system applied to interior (negative) side of concrete surfaces.

B. Waterproofing: Crystalline type waterproofing designed to resist water penetration when applied to wall or floor negative side (side away from water pressure).

1. Provide system with integral finish or capable of being painted.

2. Floor applications shall be designed for pedestrian traffic.

3. Finish: Manufacturer's standard, white where available.

C. Accessory Materials: Provide accessory materials as required and recommended by waterproofing manufacturer to assure complete, watertight installation.

PART 3 - EXECUTION

3.1 PREPARATION

A. Ensure sleeves, curbs, and projections that penetrate waterproofing are properly and rigidly installed.

B. Ensure surfaces are free of cracks, depressions, waves or projections which may be detrimental to proper installation of waterproofing.

1. Repair surfaces as required by manufacturer's representative.

C. Seal cracks and expansion joints as recommended.

D. Clean surfaces of dust, dirt and foreign matter detrimental to proper installation of waterproofing.

3.2 INSTALLATION

A. Apply waterproofing in accordance with manufacturer's recommendations and installation instructions for watertight installation.

B. Seal items projecting through waterproofing.

3.3 SITE QUALITY CONTROL

A. Manufacturer's Field Services: Manufacturer’s representative to inspect work of Project and provide certification waterproofing has been installed in accordance with manufacturer's recommendations.

1. Provide unobstructed access to waterproofing work for inspection.

2. Correct defects and irregularities as advised by manufacturer's representative.

END OF SECTION

SECTION 07 21 00

THERMAL INSULATION

PART 1 - GENERAL

1.1 SUMMARY

A. Section Includes: Provide insulation and accessories as required for complete installation.

1. Provide thermal batt insulation with integral vapor retarder.
2. Provide poly-scrim faced batt insulation for exposed interior applications.
3. Provide thermal board insulation with integral vapor retarder.
4. Provide nailable surface polyisocyanurate thermal board roof insulation.
5. Provide foil faced polyisocyanurate thermal board insulation.
6. Provide extruded polystyrene thermal insulation.

B. Related Work:
1. Section 07 53 10: Insulation integral with elastomeric PVC membrane roofing.
2. Section 09 21 00: Acoustical insulation concealed in gypsum board systems.

1.2 ADMINISTRATIVE REQUIREMENTS

A. Interior Vapor Retarders: Where specifications require foil faced vapor retarders as part of building thermal insulation system, intent is to prevent migration of spores from mold and mildew into interior building spaces.

1. Intent is to provide air barrier and vapor retarder on interior surface while allowing vapor to move through exterior wall vapor permeable surfaces, while vapor permeable water barriers are maintained at exterior side of wall.

1.3 SUBMITTALS

A. Product Data: Furnish manufacturer's literature for each type of insulation.

1. Submit Underwriter's Laboratory approval numbers for required fire ratings; approvals of other laboratories contingent upon acceptance of applicable authorities.

1.4 QUALITY ASSURANCE

A. Sustainability Requirements: Comply with *CAL*Green requirements including those relative to energy efficiency.

PART 2 - PRODUCTS

2.1 MATERIALS

A. System Description: Provide thermal insulation with accessories.

B. Thermal Batt Insulation: Preformed slag mineral or glass fiber with thermosetting resin binders, conforming to ASTM C665; formaldehyde-free.

1. Manufacturers:

a. Johns Manville/FSK-25 Thermal-Shield Insulation.
b. Owens-Corning Fiberglas Corp./Fiberglas FS-25 Insulation.
c. CertainTeed/Thermafiber FS25 Insulation.
d. Substitutions: Refer to Section 01 25 00.

a. Johns Manville/Thermal-Shield Insulation.
b. Owens-Corning Fiberglas Corp./Fiberglas Insulation.
c. CertainTeed/Thermafiber Insulation.
d. Substitutions: Refer to Section 01 25 00.

2. R-Value: Minimum R-19 at walls, R-38 at horizontal surfaces, unless otherwise indicated.

3. Flame Spread/Smoke Developed Rating: Maximum 25/450, ASTM E84.

4. Vapor Retarder: Type III, aluminum vapor retarder on one side.

5. Vapor Retarder: Type I: No vapor retarder.

6. Combustibility: Pass ASTM E136.

C. Thermal Batt Insulation (LEED): Preformed batt insulation.

1. Manufacturers:

a. Bonded Logic (602.812.9114)/Ultratouch cotton insulation.
b. U.S. Greenfiber (Greenstone)/Cocoon Cellulose Insulation.
c. Johns Manville Corp. (800.654.3103)/Grid-Shield Rx fiberglass insulation.
d. Substitutions: Refer to Section 01 25 00.

2. R-Value: Minimum R-19, unless otherwise indicated.

D. Hi Density R-38 Thermal Batt Insulation: Preformed slag mineral or glass fiber with thermosetting resin binders, conforming to ASTM C665; formaldehyde-free.

1. Manufacturers:

a. Knauf Insulation/High Density EcoBatt ECOSE FSK-25Insulation.
b. Substitutions: Refer to Section 01 25 00.

2. R-Value: Minimum R-38.

3. Flame Spread/Smoke Developed Rating: Maximum 25/450, ASTM E84.

4. Vapor Retarder: Type III, aluminum vapor retarder on one side.

E. Thermal Batt Exposed Ceiling Insulation: Preformed batt insulation with white poly-scrim-kraft or similar vapor retarder facing meeting specified fire rating and intended for exposed applications.

1. Manufacturers:

a. CertainTeed/Post Frame Poly-Scrim-Kraft (PSK) Fiber Glass Insulation.
b. Substitutions: Refer to Section 01 25 00.

2. R-Value: Minimum R-38, unless otherwise indicated.

3. Flame Spread/Smoke Developed Rating: Maximum 25/450, ASTM E84.

F. Thermal Board Insulation: Preformed slag mineral or glass fiber with thermosetting resin binders forming rigid board, conforming to ASTM C612.

1. Manufacturers:

a. Johns Manville/Insul-Shield Insulation.
b. Owens-Corning Fiberglas Corp./Fiberglas 700 Series Insulation.
c. CertainTeed/CertaPro Commercial Board Insulation.
d. Substitutions: Refer to Section 01 25 00.

2. Thickness: Minimum 1" unless otherwise indicated; fill furring channel space between wall and gypsum board.

3. Flame Spread/Smoke Developed Rating: Maximum 25/450, ASTM E84.

4. Combustibility: Pass ASTM E136.

5. Vapor Retarder: Type I, unfaced.

6. Vapor Retarder: Type III: Aluminum vapor retarder on one side.

G. Thermal Board Insulation with Nailable Surface: Provide foam insulation intended for use with sloped nailable type roofing systems; with minimum 7/16” oriented strand board (OSB) surface and glass fiber mat facer, conform to ASTM C1289, Type V.

1. Manufacturers:

a. Johns Manville/NailBoard.
b. Dow Chemical Co./Hy-Therm Nail-Line.
c. Atlas Roofing Corp./ACFoam Nail Base.
d. RMAX, Inc./Nailable Base-3.
e. Substitutions: Refer to Section 01 25 00.

2. Thermal Resistance: Not less than R-38 total Long-Term Thermal Resistance (LTTR) unless otherwise indicated.

H. Thermal Board Insulation with Foil Face: Provide foam insulation intended for use with roofing systems; with foil facing, conform to ASTM C1289, Type I, Class I.

1. Manufacturers:

a. Dow Chemical Co./Thermax Metal Building Board or Thermax Sheathing.
b. Atlas Roofing Corp./ACFoam Supreme.
c. RMAX, Inc./Thermaroof Plus-3.
d. Substitutions: Refer to Section 01 25 00.

2. Thickness: As indicated on Drawings.

3. Thermal Resistance: Not less than R-30 total Long-Term Thermal Resistance (LTTR) unless otherwise indicated.

I. Blown-In Insulation: Glass fiber blown-in insulation.

1. Manufacturers:

a. Johns Manville/Climate Pro Loose Fill Blow-In Fiber Glass Insulation.
b. Owens Corning/AttiCat Expanding Blown-In Pink Fiberglas.
c. CertainTeed/InsulSafe or OPTIMA Blow-in Insulation.
d. Substitutions: Refer to Section 01630.

2. R-Value/Thickness: As indicated, maximum possible for spaces indicated to be insulated where not specifically indicated.

J. Accessories: Furnish as recommended by insulation manufacturer for insulation types, substrates, and conditions involved.

1. Fasteners and Attachment Devices: Comply with insulation manufacturer recommendations for attachment of insulation.

2. Fasteners to withstand loads specified for system.

3. Vapor Retarder Tape: Minimum 2" wide self-adhering type designed to maintain vapor retarder integrity and complying with fire resistance ratings as required by applicable codes.

4. Penetration Type Insulation Supports: Galvanized or electroplated steel penetration supports with adhesive attachment to substrate and support disc.

5. Hat Channels for Special Fiberous Continuous Insulation: Types as indicated and as recommended by insulation manufacturer for applications indicated.

6. Thermal Break Insulation Supports for Continuous Insulation: Provide attachment system designed specifically for supporting both continuous insulation and exterior building cladding systems indicated.

a. Manufacturers:

1) Armatherm (844.360.1036)/Armatherm Z Girt Structural Thermal Break.
2) Knight Wall Systems (855.597.9255)/CI or HCI System.
3) Substitutions: Refer to Section 01 25 00.

b. Provide system recommended by manufacturer for applications indicated with accessories as required for complete thermally-broken continuous insulation system in configurations indicated.

PART 3 - EXECUTION

3.1 EXAMINATION

A. Verify substrate and adjacent materials are dry and ready to receive insulation; beginning installation signifies acceptance of conditions.

B. Ensure mechanical and electrical items affecting work are properly placed, complete, and have been inspected by Architect prior to commencement of installation.

3.2 INSTALLATION

A. General: Install insulation in accordance with manufacturer's instructions and applicable code requirements. Cut and trim insulation neatly, to fit spaces.

1. Fit insulation tight within spaces and tight to and behind mechanical and electrical services within insulation plane; leave no gaps or voids; maintain integrity of thermal barrier.

2. Backed Insulation: Use insulation free of ripped backs and edges.

3. Insulations with Vapor Retarder Facing: Install insulation with integral vapor retarder with vapor retarder toward inside of building.

B. Batt Insulation: Friction fit batt insulation in place; use tape or penetration supports as necessary to assure permanent installation.

1. Taping: Tape joints and tears in integral vapor retarder, including joints between insulation and surrounding construction, to ensure vapor-tight installation.

2. Taping: Tape tears in integral vapor retarder.

3. Penetration Supports: Cut or bend pins in locations accessible to maintenance personnel, to eliminate potential hazards from exposed pin points.

C. Nailable Surface Roof Insulation: Secure using fasteners recommended by insulation manufacturer for application indicated and capable of resisting wind loads specified for roofing systems applied over nailable surfaced roof board insulation.

END OF SECTION

SECTION 07 26 00

BELOW-GRADE VAPOR RETARDER

PART 1 - GENERAL

1.1 SUMMARY

A. Section Includes: Provide vapor retarder system for below grade and slab-on-grade concrete, including sealing joints and protrusions through vapor retarder and sand bed below vapor retarder.

1.2 SUBMITTALS

A. Product Data: Submit manufacturer's literature.

1.3 SITE CONDITIONS

A. Do not apply vapor retarder during inclement weather or when air temperature is below 40 degrees F.

PART 2 - PRODUCTS

2.1 SYSTEMS MANUFACTURERS

A. Fortifiber Corp./Ultra 15.

B. Raven Industries, Inc./Vapor Block # VB 15 (15 mil Blue).

C. Stego Industries, Inc./Stego Wrap (15 mil).

D. Substitutions: Refer to Section 01 25 00.

2.2 MATERIALS

A. System Description Includes: Provide vapor retarder system for below grade and slab-on-grade concrete, including sealing joints and protrusions through vapor retarder and sand bed below vapor retarder.

B. Vapor Retarder: ASTM E1745, Class A vapor retarder consisting of 15 mil polyolefin film.

1. Permeance: Maximum 0.025 perms, ASTM F1249 and E154 tests.

2. Resistance to Puncture: Minimum 2200 grams, ASTM D1709, Method B.

3. Tear Resistance: Minimum 8.74 lbs., ASTM D1004.

4. Tensile Strength: Minimum 35 lbs/in., ASTM E154, Section 9, Method D-882, in both directions.

C. Joint Sealer: Pressure sensitive tape as recommended by vapor retarder manufacturer and providing comparable permeance to vapor retarder.

D. Sand Bed: Clean natural sand; free from silt, clay, loam, friable or soluble materials, and organic matter.

PART 3 - EXECUTION

3.1 PREPARATION

A. Ensure sleeves, curbs and projections that penetrate vapor retarder are properly and rigidly installed.

B. Ensure substrate is free of projections and irregularities that may be detrimental to proper installation of vapor retarder.

3.2 INSTALLATION

A. Spread and roll sand to provide smooth, even bed for vapor retarder.

B. Apply vapor retarder in accordance with manufacturer's recommendations and installation instructions and in accordance with ASTM E1643; comply with most restrictive where conflicts occur.

1. Seal items projecting through vapor retarder with pressure sensitive tape.

C. Seams: Minimum 12" overlap, sealed with pressure sensitive tape for vapor tight seal.

D. Lay vapor retarder membrane smooth with no fish-mouths or bunches of material.

E. Inspect and repair vapor retarder prior to application of concrete slab; tape tears and repair damage.

END OF SECTION

SECTION 07 28 00

WEATHER BARRIER/UNDERLAYMENT

PART 1 - GENERAL

1.1 SUMMARY

A. Section Includes: Provide weather barrier/underlayment air and water barrier systems for siding, sloped roofing, flashing and sheet metal, and penetrations with accessories as required for complete watertight installation.

1. Sloped Roofing Underlayment: Provide self-adhering sheet membrane underlayment at sloped roofing systems, with accessories as required for complete watertight installation.

2. Flashings and Sheet Metal Underlayment: Provide self-adhering sheet membrane underlayment at flashings and sheet metal, with accessories as required for complete watertight installation.

3. Self-Adhering Sheet Membrane (SASM) Flashing at Penetrations: Provide SASM flashing for around penetrations through building paper including windows and doors, with accessories as required for complete watertight installation.

B. Related Sections:

1. Section 07 60 00: Exposed metal flashing.

1.2 ADMINISTRATIVE REQUIREMENTS

A. Weather Barriers: Provide weather barrier/underlayment systems which, with other building components, comply with applicable code requirements for air barriers and water barriers.

1. Air Barriers: Air barriers shall be as defined by applicable Energy Code requirements and shall include standard exterior wall components and air seal joint sealants specified in Section 07 90 00 – Joint Sealants.

2. Water Barriers: Water barriers shall be as defined by applicable Building Code requirements and shall include vapor permeable systems with or without rainscreen barriers intended to extend amount of water drained to exterior.

3. Self-Adhering Flexible Flashings: Intent of flexible flashings at window openings, door openings, and other wall penetrations is to ensure water cannot move from exterior surface past water barriers and into building.

B. Pre-Installation Meeting: Convene one week prior to commencing work; require attendance of parties directly affecting underlayment.

1. Review procedures and coordination required with related work.

1.3 SUBMITTALS

A. Product Data: Furnish manufacturer's literature for each type of underlayment.

B. Samples: Furnish samples of each material.

1.4 QUALITY ASSURANCE

A. Sustainability Requirements: Comply with *CAL*Green requirements including those relative to finish material pollution control for adhesives.

1.5 WARRANTY

A. Extended Correction Period: Provide for correcting failure of system to resist damage from anticipated sources including damage from water penetration. Repair system and pay for or replace damaged materials and surfaces.

1. Period: Two years.

PART 2 - PRODUCTS

2.1 MATERIALS

A. System Description: Provide weather barrier/underlayment air and water barrier systems for, sloped roofing, flashing and sheet metal, and penetrations with accessories.

B. Regulatory Requirements: Provide materials conforming to applicable air quality management district limitations on volatile organic compound (VOC) emissions.

C. Regulatory Requirements: Provide materials with minimum volatile organic compound (VOC) emissions available.

D. High Temperature Metal Roofing Underlayment: Self-adhering sheet membrane with primers and seam sealers as required for complete watertight installation; type as recommended by manufacturer for substrate and for applications indicated.

1. Manufacturers:

a. GCP Applied Technologies (Grace).
b. Henry Company.
c. Substitutions: Refer to Section 01 25 00.

E. Sheet Metal and Flashing Underlayment: Self-adhering rubberized sheet membrane with primers and seam sealers as required for complete watertight installation; type as recommended by manufacturer for substrate and for applications indicated.

1. Manufacturers:

a. GCP Applied Technologies (Grace).
b. Henry Company.
c. Carlisle Corp.

d. Protecto Wrap Company.
e. Substitutions: Refer to Section 01 25 00.

2. Provide specific membrane types as recommended by system manufacturers for each type of application.

F. Self-Adhering Sheet Membrane (SASM) Flashing at Penetrations: SASM with primers and seam sealers as required for complete watertight installation; type as recommended by manufacturer for substrate and for applications indicated.

1. Manufacturers:

a. GCP Applied Techologies (Grace).
b. Henry Company.
c. Carlisle Corp.
d. Protecto Wrap Company.
e. Substitutions: Refer to Section 01 25 00.

2. Provide specific membrane types as recommended by system manufacturers for each type of application.

G. Concealed Metal Flashings Integral with Underlayment: Minimum 26 gage thick steel with minimum 0.90 oz/sf galvanized coating; ASTM A653.

1. Fasteners: Standard round wire type of hot dipped galvanized steel; minimum 19/64" head diameter and 0.104" shank diameter; minimum 7/8" long.

H. Bituminous Paint: Acid and alkali resistant type; black color.

I. Accessories: Provide as recommended by underlayment manufacturers for specific applications.

1. Plastic Cement: Cutback asphaltic type with mineral fiber components, for sealing and coating flashings; free of toxic solvents and free of asbestos. Capable of setting within 24 hours at temperatures of approximately 75 degrees F and 50% R.H.

2.2 FLASHING FABRICATION

A. Fabricate metal flashings as recommended by Sheet Metal and Air Conditioning Contractors National Association (SMACNA) "Sheet Metal Manual".

B. Form flashings to drain water to exterior at roofing and siding construction for penetrations, sill and header flashings.

C. Form sections square, true and accurate to size, in maximum possible lengths and free from distortion and other defects detrimental to appearance or performance.

D. Hem exposed edges of metal flashings minimum 1/4" on underside.

E. Apply bituminous paint on concealed surfaces of metal flashings.

PART 3 - EXECUTION

3.1 PREPARATION

A. Install underlayment over surfaces that are dry, free of ridges, warps and voids that could damage paper.

B. Coordinate installation with installation of components and items projecting through underlayment.

3.2 FLASHINGS INSTALLATION

A. Install flashings as recommended by Sheet Metal and Air Conditioning Contractors National Association (SMACNA) "Sheet Metal Manual".

B. Weatherlap joints minimum 2" and seal with plastic cement; secure in place.

C. Fastenings: Concealed in completed installation.

3.3 UNDERLAYMENT INSTALLATION

A. Install weather barrier/underlayment in accordance with installation instructions and recommendations of each manufacturer and of manufacturers of products to cover weather barrier/underlayment; comply with applicable code requirements.

1. Wall Underlayment: Provide one-layer No. 15 building paper underlayment.

2. Wall Underlayment: Provide two-layers Grade D building paper underlayment.

3. Wall Underlayment: Provide fluid applied underlayment.

4. Wall Underlayment: Provide one-layer sheet membrane underlayment.

5. Sloped Roofing: Provide one-layer sheet membrane underlayment.

6. Flashing and Sheet Metal: Provide one-layer sheet membrane underlayment.

7. Penetrations: Apply one-layer of self-adhering sheet membrane extending minimum 18" from penetrations, including windows and doors; start at bottom of penetration and weatherlap joints.

    a. Apply top layer over metal flashing to direct water to exterior.

8. Weatherlap joints as recommended by system manufacturer.

    a. Weatherlap joints not less than 2” at building paper.

9. Secure underlayment in place, stagger joints between sheet membrane layers; lap ends minimum 6"; stagger end joints.

B. Building Paper Underlayment: Prime substrates and roll sheet membrane underlayment smooth, firmly and completely to surfaces indicated, with no fish-mouths or bunches of material.

1. Apply plastic cement to substrate prior to application of underlayment starter strips to prevent capillary movement of water back up beneath underlayment.

2. Weatherlap items projecting through building paper underlayment and seal with plastic cement.

C. Sheet Membranes: Weatherlap items projecting through sheet membrane underlayment and seal with sealer recommended by sheet membrane underlayment manufacturer.

END OF SECTION

SECTION 07 41 15

MANUFACTURED BATTEN SEAM ROOFING

PART 1 - GENERAL

1.1 SUMMARY

A. Section Includes: Provide factory finished manufactured metal batten seam type roofing including integral metal flashings and sealants, and accessories as required for complete weather-tight installation.

B. Related Work:

1. Section 07 21 00: Thermal insulation.
2. Section 07 28 00: Weather barrier/underlayment.
3. Section 07 60 00: Flashing and sheet metal not integral with roofing.
4. Section 07 95 00: Expansion Joint Cover Assemblies

1.2 REFERENCES

A. Sheet Metal and Air Conditioning Contractors National Association (SMACNA): Architectural Sheet Metal Manual.

1.3 ADMINISTRATIVE REQUIREMENTS

A. Pre-Installation Conference: Convene pre-construction conference one week prior to metal roofing work to coordinate roofing with other trades; require attendance of parties directly affecting metal roofing work.

1. Review installation and coordination required with related work.

1.4 SUBMITTALS

A. Product Data: Furnish manufacturer's literature for prefabricated components, and recommendations for cleaning and protection.

B. Shop Drawings: Indicate dimensioning, panel layout, general construction details including closures, flashings, locations of and types of sealants, and anchorage.

C. Samples: Furnish finished preformed metal roofing and each type of exposed metal flashing.

1.5 QUALITY ASSURANCE

A. Qualification of Installer: Company with minimum five years successful experience in work of comparable scope.

B. Mock-Up: Provide 200 square foot mock-up of metal roofing construction at location approved by Architect; approved mock-up may be incorporated into Project.

1.6 DELIVERY, STORAGE, AND HANDLING

A. Provide protective covering on finished flashing materials to protect them through installation.

1.7 WARRANTY

A. Extended Correction Period: Provide for correcting failure of system to resist damage from anticipated sources including damage from wind and water penetration. Repair system and pay for or replace damaged materials and surfaces.

1. Period: Three years.

B. Manufacturer’s Warranty: Submit manufacturer’s warranty including special manufacturer services as required for manufacturer’s warranty.

1. Period: 20 years.

2. Manufacturer's warranty shall not detract from requirements of extended correction period nor from Owner’s rights under implied and expressed warranties regardless of wording of manufacturer’s warranty.

PART 2 - PRODUCTS

2.1 SYSTEMS MANUFACTURERS

A. AEP Span.

B. Berridge Manufacturing Co. (Basis of Design)

1. Color 1: High Roof: Lead Cote

2. Color 2: Low Roof: Charcoal Grey

C. ATAS International, Inc.

D. Substitutions: Refer to Section 01 25 00.

2.2 MATERIALS

A. System Description Includes: Provide factory finished manufactured metal batten seam type roofing including integral metal flashings and sealants, and accessories.

B. Regulatory Requirements: Comply with California Building Standards Code requirements for metal roofing systems.

1. Cool Roof System: Comply with California Building Standards Code requirements for “Cool Roof” system including three-year aged solar reflectance value requirements.

a. Label: System to have Cool Roof Rating Council (CRRC) label.

C. Design Criteria: Design system to provide movement of components without buckling, failure of joint seals, undue stress on fasteners or other detrimental effects, when subject to 100-year seasonal temperature ranges.

1. Design system to accommodate tolerances of structure, provided irregularities do not exceed industry recognized standards and clearances are maintained.

2. Provide for positive drainage of water entering or occurring within preformed metal roofing system.

D. Batten Seam Metal Roofing System: Preformed metal roofing system complete with anchoring assembly and accessory components.

1. Type: Basis of Design: Tee-Panel, 12 ¾" coverage.

2. Type: Manufacturer's standard batten seam system specified with pans approximately 12" on center unless otherwise indicated.

3. Sheet Metal: Minimum 24 gage galvanized steel, minimum G90 galvanized coating, ASTM A924 and A653.

4. Finish: Manufacturer's standard kynar/hylar coil coat finish complying with AAMA 605.2.

5. Colors: Where color is not indicated on Drawings or Finish Schedule, provide custom color as directed by Architect.

E. Sealants and Gaskets: Manufacturer's standard type suitable for use in conjunction with installation of metal roofing.

1. Non-staining; non-corrosive; non-shrinking and non-sagging; ultra-violet and ozone resistant for exterior applications.

2. Color of exposed sealants and gaskets to match roofing.

F. Fasteners: Manufacturer's standard hot dip galvanized fasteners with not less than G90 galvanized coating.

1. Finish exposed fasteners to match roofing.

G. Underlayment: Specified in Section 07 28 00 – Weather Barrier/Underlayment.

2.3 FABRICATION

A. Internal and External Corners: Same materials, material thickness and finish as roofing, profile to suit system, brake formed, shop cut and factory mitered to required angles.

B. Mitered internal corners shall be backed with minimum 22 gage galvanized steel sheet stock to maintain continuity of profile.

C. Expansion Joints: Provide concealed metal expansion control throughout roofing system.

D. Sheet Metal, Flashings, Gutters, Closures, expansion covers, and Other Components: **Custom color to match adjacent roofing**. Brake formed to required profiles; conform to SMACNA Manual.

1. Conform to requirements specified in Section 07 60 00 - Flashing and Sheet Metal

E. Provide for positive drainage to exterior, any water entering or occurring within metal roofing systems.

.

PART 3 - EXECUTION

3.1 EXAMINATION

A. Verify substrate is free of elements that could be harmful to system.

B. Beginning of work signifies acceptance of conditions.

C. Take special care not to damage underlayment beyond that required to secure system to structure.

3.2 INSTALLATION

A. Install manufactured metal batten seam roofing in accordance with manufacturer's recommendations, installation instructions, and approved shop drawings.

B. Install metal flashing and sheet metal in accordance with SMACNA Architectural Sheet Metal Manual.

1. Comply with installation requirements specified in Section 07 60 00 - Flashing and Sheet Metal.

C. Exercise care when cutting materials on site, to ensure cuttings do not remain on finished surfaces.

D. Protect metal surfaces in contact with cementitious materials and dissimilar metals with bituminous paint; allow protective coating to dry prior to installing members.

E. Permanently fasten roofing system to structural supports, properly aligned, leveled and plumb.

1. Maximum 1/16" offset from true alignment between adjacent members butting or in line.

2. Maximum 1/4" variation from plane or location indicated on Drawings.

F. Locate end laps over supports; end lap panels minimum 2"; ensure side-laps are over firm bearing.

G. Provide expansion joints at regular basis, concealed within system.

H. Use concealed fasteners except where specifically approved by Architect.

I. Install sealants and gaskets where required to prevent direct weather penetration.

J. Completed installation shall be free of rattles, noise due to thermal and air movement, and wind whistles.

K. Remove protective coating when no longer required to protect roofing and flashing from construction.

END OF SECTION

SECTION 07 46 40

FIBER CEMENT SIDING

PART 1 - GENERAL

1.1 SUMMARY

A. Section Includes: Provide fiber reinforced cement siding with accessories for complete weathertight installation.

B. Related Sections:

1. Section 07 28 00: Weather barrier/underlayment.

1.2 SUBMITTALS

A. Product Data: Furnish manufacturer's literature.

B. Shop Drawings: Indicate fabrication details, connection details, pertinent dimensions, and erection support points.

1. Show precise locations of exposed fasteners, including drawings scaled to indicate exposed fastener patterns.

C. Samples: Submit sample of each type of panel with finish required.

1.3 QUALITY ASSURANCE

A. Sustainability Requirements: Comply with *CAL*Green requirements including those relative to finish material pollution control for paints and coatings.

B. Qualification of Installer: Firm with minimum five years successful experience installing architectural fiber cement building panels.

1.4 DELIVERY, STORAGE, AND HANDLING

A. Deliver and store in manufacturer's wrapping and crating.

1.5 WARRANTY

A. Extended Correction Period: Extend correction period to two years.

1. Repair or replace defective siding that fails through corrosion or finish damage because of manufacturing defects.

PART 2 - PRODUCTS

2.1 SYSTEMS MANUFACTURERS

A. James Hardie Building Products.

B. GAF Materials Corp./GAF-ELK WeatherSide.

C. Plycem USA, Inc./Allura.

D. Substitutions: Refer to Section 01 25 00.

2.2 MATERIALS

A. System Description Provide fiber cement siding with accessories.

B. Fiber Cement Panels: Provide systems as indicated on Drawings; not less than ASTM C1186, Type A with label listing an approved quality control agency per code.

1. Plank System: Match Hardie/Hardiplank, fiber-reinforced cement panels, with no asbestos content.

a. Thickness: Preformed 5/16" thick.

b. Finish: Smooth surface.

c. Size: 9-1/2" width (8-1/4" coverage), with planks available in up to 12'-0" lengths.

2. Panel System: Match Hardie/Hardipanel, fiber-reinforced cement panels, with no asbestos content.

a. Thickness: Preformed 5/16" thick.

b. Finish: Smooth surface.

c. Size: 4'-0" width by lengths appropriate for application, including 8', 9', and 10' lengths as required to minimize joints.

3. Panel Soffits and Trim: Match panel system as indicated and as required for complete installation.

4. Factory Prime Finish: Provide factory primed fiber cement panels using primer compatible with paints and coatings specified in Section 09 90 00 – Painting and Coating.

5. Shop Finish: Provide manufacturer’s premium quality shop painted finished materials.

a. Colors: Where color is not indicated on Drawings or Finish Schedule, provide custom color as directed by Architect.

6. Fasteners: Corrosion resistant non-magnetic stainless-steel siding nails; types as recommended by system manufacturer.

7. Exposed Fastener Heads: Types as approved by Architect.

C. Accessories: Provide as indicated, as recommended by panel manufacturer and as required for complete finished siding installation.

PART 3 - EXECUTION

3.1 PREPARATION

A. Install siding over surfaces which are dry, free of ridges, warps and voids.

B. Coordinate installation of siding with installation of items projecting through; ensure openings are properly sized and located prior to siding installation.

C. Underlayment: Take special care not to damage underlayment beyond that required to secure siding to structure.

3.2 INSTALLATION

A. Provide for installation procedures, temporary bracing and induced loads during erection; maintain temporary bracing in place until final support is provided.

1. Coordinate with building paper installation in Section 07 28 00; take special care not to damage building paper beyond required penetrations for fasteners.

B. Install siding in accordance with manufacturer recommendations and installation instructions, without damage to panel, panel shape or finish.

1. Carefully locate exposed fasteners to conform to Architectural Drawings and approved shop drawings; exposed fasteners to provide uniform pattern as approved.

C. Erect level, plumb, square, and true within allowable tolerances.

D. Align and maintain uniform horizontal and vertical joints, as erection progresses.

E. Securely fasten units in place.

F. Seal exposed fastener heads using materials matching mineral-fiber cement siding and strike flush to match adjacent surfaces.

G. Site Tolerances: Maintain following joint tolerances of erected mineral-fiber units:

1. Face Width of Joint: Maximum plus or minus 1/16" (total 1/8").
2. Jog in Alignment of Edges: Maximum 1/8".

3.3 CLEANING

A. Clean marks, debris, and dirt from exposed surfaces of mineral-fiber units using manufacturer recommended cleaning materials and procedures which do not stain nor damage panels or fasteners.

END OF SECTION

SECTION 07 53 10

ELASTOMERIC PVC MEMBRANE ROOFING

PART 1 - GENERAL

1.1 SUMMARY

A. Section Includes: Provide reinforced polyvinyl chloride (PVC) type elastomeric sheet membrane roofing system with base flashings, insulation, roof deck board, and accessories for complete, weather-tight installation.

B. Related Sections:

1. Section 06 10 50: Wood blocking and plywood in conjunction with roofing.
2. Section 07 60 00: Flashing and sheet metal.

1.2 REFERENCE STANDARDS

A. National Roofing Contractors Association: The NRCA Roofing and Waterproofing Manual.

1.3 ADMINISTRATIVE REQUIREMENTS

A. Pre-Installation Meeting: Convene not less than one week prior to commencing work of this section. Require attendance of parties directly affecting roofing work.

1. Review procedures and coordination required with related work.

1.4 SUBMITTALS

A. Product Data: Submit membrane manufacturer's literature for membrane and base flashing materials; provide specific recommendations of insulation system manufacturer.

1. Submit membrane manufacturer's recommendations for surface conditioning, flashing, joint cover and crack sealants, and temperature range for application of materials.

B. Shop Drawings: Submit for PVC sheet seams and insulation layout; indicate location and insulation type; provide cross section indicating layers of insulation along with R-value calculations.

C. Samples: Submit samples of each exposed material.

D. Certifications:

1. Installer: Submit certification installer is approved for roof system installation.

2. Materials: Submit certification materials and components conform to Specifications and are compatible with each other, roof substrate, and related work.

3. Fire and Wind: Submit manufacturer's certification system conforms to fire and wind requirements.

4. Manufacturer Representative: Submit certification by manufacturer's representative indicating work has been installed in accordance with manufacturer's recommendations and installation instructions.

1.5 QUALITY ASSURANCE

A. Sustainability Requirements: Comply with *CAL*Green requirements including those relative to energy efficiency.

B. Qualification of Installers: Company with minimum five years successful experienced in PVC membrane roof application on projects of similar scope.

1. Installer: Roofing and insulation manufacturer certified or approved.

C. Supervisor: Installer to maintain full-time supervisor/foreman who is on jobsite during roofing work who is experienced in installation of roofing system specified.

1.6 DELIVERY, STORAGE, AND HANDLING

A. Protect foam insulation from direct sunlight exposure.

1.7 SITE CONDITIONS

A. Do not apply roofing membrane during inclement weather or when air temperature may fall below 40 degrees F.

1. Do not allow materials to be exposed to moisture during transportation, storage, handling or installation.

2. Mark damp or wet materials, including felts which froth or foam during installation, and remove from site within 24 hours.

B. Do not apply materials to damp, dirty, dusty, or otherwise unsuitable surfaces.

1. Allow concrete surfaces to cure minimum 28 days.

C. Do not expose materials vulnerable to water or sun damage in quantities greater than can be weatherproofed during same day.

1.8 WARRANTY

A. Extended Correction Period: Provide for correcting failure of system to resist damage from anticipated sources including damage from wind and water penetration. Repair system and pay for or replace damaged materials and surfaces.

1. Period: Two years.

B. Manufacturer’s Warranty: Submit manufacturer’s warranty including special manufacturer services as required for manufacturer’s warranty.

1. Period: 20 years.

2. Manufacturer's warranty shall not detract from requirements of extended correction period nor from Owner’s rights under implied and expressed warranties regardless of wording of manufacturer’s warranty.

PART 2 - PRODUCTS

2.1 SYSTEMS MANUFACTURERS

A. Carlisle SynTec Systems.

B. GenFlex Roofing Systems Div. GenCorp.

C. Sarnafil Inc.

D. HPG International Inc.

E. Substitutions: Refer to Section 01 25 00.

2.2 MATERIALS

A. System Description: Provide reinforced polyvinyl chloride (PVC) type elastomeric sheet membrane roofing system with base flashings, and accessories.

1. System: Fully adhered exposed membrane.

2. Provide roofing system materials by a single manufacturer, except where materials of other manufacturers are specified or approved by Architect.

3. Provide roof insulation, double layer application where indicated.

4. Provide tapered insulation as required to ensure positive 1/4” per foot slopes to drains.

5. Provide roof deck board to separate insulation from roof membrane.

B. Regulatory Requirements

1. Cool Roof System: Comply with California Building Standards Code requirements for “Cool Roof” system including three-year aged solar reflectance value requirements.

a. Label: System to have Cool Roof Rating Council (CRRC) label.

2. Fire and Wind Resistance: Conform to California Building Standards Code requirements for Underwriters Laboratory (UL) Class A roof system, with UL Class 60 wind resistance classification.

a. Provide materials conforming to code requirements for roof/ceiling 1-hour fire resistive rating for components and materials indicated in Contract Documents.

C. Roof Membrane: ASTM D4434, Polyvinyl Chloride (PVC) Elastomeric membrane, reinforced, thickness as recommended by roof membrane manufacturer for application involved, but no less than 48 mils.

1. Scrim Reinforcing: Manufacturer's standard fleece, fiberglass, or polyester scrim.

2. Corners and Elastomeric Membrane Flashing: Provide products using same base material as roof membrane; corners preformed.

3. Seams: Solvent welded and seam sealant finished.

4. UV Resistance: Provide materials with demonstrated resistance to ultraviolet light with no visible surface cracking or discoloration based on industry accepted accelerated test methods.

5. Provide materials compounded specifically for application methods and substrates indicated on Drawings; comply with requirements for fire rated materials.

6. Color: As indicated, as selected by Architect from manufacturer’s full range of Cool Roof Rated colors where not indicated.

D. Insulation: Provide materials approved for use with specified membrane and suitable for application indicated; provide tapered insulation where insulation is indicated to provide roof slopes.

1. Polyisocyanurate Insulation: ASTM C1289, Type II, Class 1, Grade 2 glass fiber faced isocyanurate, with ASTM C1303 Long Term Thermal Resistance (LTTR).

2. Other Types of Insulation: Acceptable subject to manufacturer's recommendations, application involved, and total thickness required for specified thermal resistance.

3. Thermal Resistance: Minimum total R-38.

E. Roof Deck Board: ASTM C1278 with moisture and mold resistant core. Provide as indicated, as required for uniform surface for membrane adherence, and as required for fire and wind ratings.

1. Manufacturers:

a. Georgia Pacific/DensDeck Prime.
b. Johns Manville/Securock.
c. Substitutions: Refer to Section 01 25 00.

F. Accessories: Provide as recommended by membrane manufacturer and system manufacturer as required for complete weather-tight installation, including, but not limited to:

1. Bonding adhesives, splicing cement, and lap sealants and mastics.
2. Seam plates.
3. Molded pipe flashing.
4. Temporary sealing, for end of day closing of membrane.
5. Mechanical fasteners.

G. Integral Coated Metal Flashings: Provide not less than 24-gage galvanized steel flashings, minimum G90 coating, coated with PVC materials for compatibility with direct bonding to roof membrane, as recommended by system manufacturer.

H. Roof Protection Pads: Provide protection materials as recommended by membrane manufacturer where maintenance traffic is anticipated over membrane.

PART 3 - EXECUTION

3.1 PREPARATION

A. Verify deck is dry, clean and smooth, free of depressions, waves and projections detrimental to roofing membrane, and properly sloped for drainage.

B. Verify roof openings, curbs, pipes, sleeves, ducts, and vents through roof are solidly set and that cant strips, nailing strips, and reglets are in place.

C. Beginning installation indicates acceptance of substrate.

D. Metal Surfaces: Remove contaminants which may adversely affect adhesion or performance of roofing system; apply metal primer.

3.2 INSTALLATION

A. Install membrane roofing system in accordance with manufacturer's recommendations and instructions and as required to meet requirements for warranty and applicable codes.

1. Comply with NRCA Specification Guide for Thermoset Roof Membranes as applicable; where conflicts exist comply with manufacturer's recommendations.

B. Insulation: Install insulation in accordance with insulation manufacturer's recommendations and roof membrane manufacturer's recommendations for installation indicated.

1. Place insulation boards butted in close contact; stagger joints between insulation board layers.

2. Bevel insulation to allow snug fit at penetrations; cut neatly around protrusions through roof.

C. Roof Deck Board: Install in accordance with manufacturer recommendations and as required to ensure suitable substrate for membrane roofing over insulation, fire ratings, and wind ratings; secure to roofing deck.

1. Place roof deck boards butted in close contact; stagger joints between roof deck board and insulation board joints.

2. Cut to allow snug fit at penetrations; cut neatly around protrusions through roof.

D. Roof Membrane: Apply membrane in accordance with membrane manufacturer's recommendations and installation instruction. Provide heat welded seams.

1. Apply sheet membrane smooth, free from air pockets, wrinkles, fish-mouths, un-lapped joints, or tears, over first layer insulation.

2. Extend roof membrane up vertical surfaces minimum 8" wherever possible and secure to nailing strips or reglets; reinforce corners with double applications of membrane.

3. Install membrane flashings and seal into membrane.

a. Coordinate installation of roof drains and related flashings.

4. Seal flashings and items projecting through membrane; seal terminations with additional layer of membrane and mastic.

5. Prevent compounds from entering and clogging drains, and from spilling or migrating onto surface of other work.

E. Roof Protection Pads: Secure roof protection pads in place in accordance with membrane manufacturer recommendations and as required to ensure protection of membrane from roof maintenance traffic.

1. Set pads to allow roof drainage; where pads cross drainage path set with not less than 4" and not more than 8" between pads.

3.3 FIELD QUALITY CONTROL

A. Site Tests: Flood test roofing prior to installation of insulation and ballast; if defects are revealed, repair and repeat flood test until no defects are revealed.

1. Do not overload structure with flood test; if necessary, section off areas as necessary.

2. Test for leaks with 2" depth of water maintained for 24 hours.

B. Manufacturer’s Field Services: Manufacturer's representative shall inspect work of Project on regular basis and provide certification roofing system has been installed in accordance with manufacturer's recommendations.

1. Provide unobstructed access to roofing work.

2. Correct defects and irregularities as advised by manufacturer's representative.

3.4 CLEANING

A. Remove roofing membrane markings from finished surfaces.

B. In areas where finished surfaces are soiled by roofing work, consult manufacturer of finished surfaces for recommended cleaning methods.

C. Leave completed roof free from debris and uniform in appearance.

3.5 PROTECTION

A. Where work must continue over finished roofing membrane, protect surface in accordance with manufacturer recommendations.

END OF SECTION

SECTION 07 60 00

FLASHING AND SHEET METAL

PART 1 - GENERAL

1.1 SUMMARY

A. Section Includes: Provide metal flashings and sheet metal including accessories as required for complete weathertight installation.

1. Flashing and sheet metal includes copings, fascias, scuppers, gutters, downspouts, rainwater leaders, reglets, and similar fabricated components as applicable to Project.

2. Provide concealed sealants used in conjunction with installation of metal flashing and sheet metal.

3. Provide miscellaneous sheet metal flashing and reglets not provided by other trades or suppliers.

a. Where reglets are to be installed in conjunction with other work, provide in adequate time for installation.

b. Where reglets are to be surface applied, provide continuous gasket between reglet and surface.

4. Provide precast concrete splash blocks.

B. Related Sections:

1. Section 06 10 50: Miscellaneous rough carpentry.
2. Section 07 28 00: Concealed flashing at weather barrier/underlayment.
3. Section 07 41 10: Flashing and sheet metal integral with metal roofing.
4. Section 07 95 00: Expansion joint cover assemblies at roofing.
5. Section 08 91 00: Louvers.

1.2 REFERENCES

A. Sheet Metal and Air Conditioning Contractors National Association (SMACNA): Architectural Sheet Metal Manual.

1.3 SUBMITTALS

A. Product Data: Furnish literature for manufactured products.

B. Shop Drawings: Clearly indicate dimensioning, layout, general construction details including closures, flashings, locations and types of sealants, anchorages, and method of anchorage.

C. Samples: Furnish samples of typical metal flashing fabrication indicating standard soldered joints and edge conditions.

1.4 QUALITY ASSURANCE

A. Sustainability Requirements:

1) two years' successful experience with CAL/Green requirements.

2. *CAL*Green Requirements: Refer to Section 01 35 15 – *CAL*Green Environmental Requirements and comply with applicable *CAL*Green Checklist indicating requirements applicable to Project.

1.5 DELIVERY, STORAGE AND HANDLING

A. Provide strippable film protective covering on shop finished flashing materials to protect materials through shipping, fabrication and installation.

1.6 WARRANTY

A. Extended Correction Period: Provide for correcting failure of system to resist damage from anticipated sources including damage from wind and water penetration. Repair system and pay for or replace damaged materials and surfaces.

1. Period: Two years.

PART 2 - PRODUCTS

2.1 MATERIALS

A. System Description: Provide flashing and sheet metal including reglets and accessories as required for complete weathertight installation.

B. Design Criteria: Allow for movement of components without causing buckling, failure of joint seals, undue stress on fasteners or other detrimental effects, when subject to 100-year seasonal temperature ranges.

C. Flashing and Sheet Metal:

1. Shop Finished Galvanized Steel Flashing and Sheet Metal: ASTM A924 and A653 G90 galvanized steel; minimum 24-gage; with factory applied fluoropolymer coating based on Kynar 500 or Hylar 5000.

a. Manufacturers:

1) Ryerson Building Products (800.328.7800)/ColorKlad.
2) Metal Sales Manuf. Corp.(800.406.7387)/PVDF (Kynar 500).
3) K&M Sheet Metal (888.567.7778)/Kynar Steel.
4) Substitutions: Refer to Section 01 25 00.

b. Location (Exposed): Where indicated, if not otherwise indicated, provide where flashing will be exposed to view from exterior of building, and where exposed to view from spaces within building.

c. Colors: Where color is not indicated on Drawings or Finish Schedule, provide custom color as directed by Architect.

d. Touch-up Paint for Prefinished Sheet Metal: Type recommended by fluoropolymer manufacturer for field touch-up.

2. Stainless Steel Flashing and Sheet Metal: Stainless steel, ASTM A666, Type 304, soft annealed, 2B finish, minimum 26-gage.

a. Location (Exposed): Where indicated, if not otherwise indicated, provide where flashing will be exposed to view from exterior of building, and where exposed to view from spaces within building.

3. Prefinished High-Performance Coated Aluminum: Manufacturer's standard two coat thermocured fluoropolymer system containing not less than 70-percent polyvinylidene fluoride resin by weight; AAMA 2605 and AA-C12C42R1x.

a. Manufacturers:

1) Ryerson Building Products (800.328.7800)/AlumaKlad.
2) Merchant & Evans Industries, Inc.(800.257.6215)/Custom.
3) Substitutions: Refer to Section 01 25 00.

b. Colors: Where color is not indicated on Drawings or Finish Schedule, provide custom color as directed by Architect.

c. Touch-up Paint for Prefinished Sheet Metal: Type recommended by fluoropolymer manufacturer for field touch-up.

4. Lead Flashing: ASTM B749, type L51121, copper-bearing sheet lead, minimum four pound per square foot (1/16" thick) lead with 6% to 7% antimony content.

5. Accessories: Provide strainers, outlet tubes, screens, baffles, hangers and gutter ends as required for a complete system and complying with SMACNA Manual.

6. Provide heavier gage metal where recommended by SMACNA Manual for size of component.

D. Manufactured Reglets: Snap-on type, for two-piece flashing; metal to match flashing and sheet metal.

1. Manufacturers:

a. Fry Reglet Corp./Springlok System.
b. W.P. Hickman Co./The Leading-Edge Drive Lock System.
c. Substitutions: Refer to Section 01 25 00.

E. Solder and Fasteners: As recommended by SMACNA and complying with applicable codes and regulations; hot dipped galvanized minimum coating comparable to G90.

F. Concealed Sealant: Butyl type for use in conjunction with sheet metal; non-staining; non-corrosive; non-shrinking and non-sagging; ultra-violet and ozone resistant for exterior concealed applications.

G. Bituminous Paint: Acid and alkali resistant type; black color; asbestos free.

H. Plastic Cement: Cutback asphaltic type; asbestos free.

I. Sealing Compound: Type recommended by roofing manufacturer; asbestos free.

J. Gaskets: Type suitable for use in conjunction with sheet metal; non-staining, non-corrosive, non-shrinking, non-sagging, ultra-violet resistant, and ozone resistant; for exterior concealed applications.

1. Manufacturers:

a. Emseal USA, Inc./Emseal MST Multi-Use Sealant Tape.
b. Substitutions: Refer to Section 01 25 00.

2.2 FABRICATION

A. Fabricate sheet metal in accordance with SMACNA Architectural Sheet Metal Manual.

B. Form sections square, true and accurate to size, free from distortion and other defects detrimental to appearance or performance.

1. Fabricate corners and intersections in shop with solder joints; watertight fabrication.

C. Form sections in maximum 10'-0" lengths; make allowance for expansion at joints.

D. Hem exposed edges on underside 1/2".

E. Back-paint flashings with heavy bodied bituminous paint where in contact with cementitious materials or dissimilar metals.

F. Form pitch pans watertight, with minimum 4" upstand and 4" flanges; form pans minimum 6" wider than item passing through roof membrane.

G. Form umbrella flashings with minimum 2" overhang, to shed water away from pitch pans.

PART 3 - EXECUTION

3.1 INSTALLATION

A. Install metal flashing and sheet metal in accordance with SMACNA Architectural Sheet Metal Manual.

1. Install tight in place, with corners square, surfaces true and straight in planes, and lines accurate to profiles as indicated on Drawings.

2. Lap joints in direction of water flow.

3. Hold downspouts in position, clear of wall, by hangers spaced not more than 10'-0" on center; securely fasten hangers to wall without exposed damage to wall surface.

B. Exercise care when cutting materials on site, to ensure cuttings do not remain on finished surfaces.

C. Provide expansion joints concealed within system.

D. Use concealed fasteners, continuous cleat type, except where specifically approved by Architect.

1. Exposed fasteners may be used, where clearly indicated on shop drawings and approved by Architect, at areas not exposed at exterior walls nor in sight of interior spaces.

E. Apply sealing compound at junction of metal flashing and felt flashing.

F. Lock seams and end joints; fit flashing tight in place; make corners square, surfaces true and straight in planes, and lines accurate to profiles.

G. Counter-flash mechanical and electrical items projecting through roof membrane.

H. Install sealants where required to prevent direct weather penetration.

1. Install continuous gasket behind surface applied reglets.

I. Completed installation shall be free of rattles, noise due to thermal and air movement, and wind whistles.

J. Install pitch pans and fill with plastic cement.

K. Install umbrella flashing with draw band collars with sheet metal sealant between penetrating item and flashing; use wood blocking at angle type penetrations and cover blocking with sealant.

L. Install splash blocks at locations to interrupt fall of water and direct water flow as indicated on Drawings.

3.2 CLEANING

A. Remove protective coating from shop finished sheet metal when no longer required to protect roofing and flashing from construction.

B. Touch-up scratched and damaged finish to match new; remove and replace sheet metal units that cannot be repaired to look identical to adjacent sheet metal when viewed from 15'-0" away.

END OF SECTION

SECTION 07 72 00

ROOF HATCHES

PART 1 - GENERAL

1.1 SUMMARY

A. Section Includes: Provide manufactured roof hatches with integral support curb, operable hardware, counterflashing, and accessories as required for complete, weather-tight installation.

1. Provide fall protection railings where indicated and as required by applicable regulations.

B. Related Sections:

1. Section 05 50 00: Ladder extenders for roof hatch access.
2. Section 07 60 00: Flashing roof hatches to roof system.

1.2 SUBMITTALS

A. Product Data: Furnish manufacturer’s literature.

B. Shop Drawings: Clearly indicate general construction, configurations, jointing methods and locations when applicable, fastening methods and general details.

PART 2 - PRODUCTS

2.1 SYSTEMS MANUFACTURERS

A. Babcock-Davis Hatchways, Inc.

B. Bilco Company.

C. Dur-Red Products, Red Plastic Co., Inc.

D. Milcor, Inc.

E. Nystrom Building Products.

F. Substitutions: Refer to Section 01 25 00.

2.2 ROOF HATCHES

A. System Description: Provide manufactured roof hatches, with integral support curb, operable hardware, counterflashing, and accessories.

B. Roof Hatches:

1. Type: Single leaf type.

2. Size: 3'-0" by 3'-0" unless otherwise indicated.

C. Construction: Construct with full welded corner joints, insulated hatch lids, and insulated internal support curbs.

1. Provide complete with integral counter-flashings to roof flashing system and flanges on support curb for anchorage to roof deck.

2. Loading: Capable of supporting minimum 40-psf external loading and 20-psf internal loading pressure.

D. Opening Hardware: Manufacturer's standard manually operating type.

1. Capable of ensuring effortless control and smooth operation without causing damage to hatch or to roofing system.

2. Capable of being opened from inside and outside.

3. Complete with hold-open mechanism and inside padlock hasps.

E. Fall Protection Integral Railings: Provide railings fixed to roof hatch curbs (not requiring additional penetration of roof assembly); comply with applicable code requirements; welded construction; cap exposed ends.

1. Railing Design Requirements: Comply with applicable codes and regulations requirements but not less than lateral force of 50 lbs. /lin. ft. uniform load and 200 lbs. at any single point without permanent set or damage; ASTM E935.

2. Rails: Seamless steel tube rails, 42" height above roof surface, 1-1/2" outside diameter, continuous railings conforming to applicable code and design requirements.

3. Chain Closures: Provide welded closed link chain capable of supporting same loads as railing and designed to allow easy removal for access from hatch to roof and roof to hatch.

2.3 FABRICATION

A. Fabricate roof hatches weather-tight, and free of visual distortions and defects.

PART 3 - EXECUTION

3.1 INSTALLATION

A. Install roof hatches in accordance with manufacturer's recommendations and instructions for complete, weather-tight installation.

B. Coordinate with installation of roofing system and related flashings.

C. Apply bituminous paint on metal surfaces of roof hatches to be in contact with cementitious materials and dissimilar metals.

END OF SECTION

SECTION 07 90 00

JOINT SEALANTS

PART 1 - GENERAL

1.1 SUMMARY

A. Section Includes: Provide joint sealants, for interior and exterior joints not specified elsewhere, with backing rods and accessories as required for complete installation.

1. Joint sealants include joint sealers and calking as indicated.

B. Related Sections:

1. Section 07 60 00: Flashing and sheet metal concealed sealants.
2. Section 07 84 00: Firestopping type joint sealants.
3. Section 08 80 00: Glazing sealants.
4. Section 09 21 00: Sealants used for acoustical treatment at gypsum board.

1.2 SUBMITTALS

A. Product Data: Furnish manufacturer's descriptive literature.

B. Samples: Furnish samples of each type of exposed joint sealer in required colors.

C. Certifications:

1. Furnish manufacturer's certification joint sealers comply with Contract Documents and are suitable for Project applications.

2. Furnish certification indicating installers are trained in proper use of specified products, qualified, and familiar with proper installation techniques.

1.3 QUALITY ASSURANCE

A. Sustainability Requirements: Comply with *CAL*Green requirements including those relative to finish material pollution control for adhesives, sealants, and caulks.

1. Provide joint sealants as required by applicable codes and regulations to fill joints and openings in building envelope separating conditioned space from unconditioned space.

B. Installer Qualifications: Firm with minimum five years successful experience on projects of similar type and size, using specified products.

C. Installers shall be familiar with proper application procedures to ensure maximum joint sealer expansion and contraction capabilities.

D. Mock-Up: Provide exterior joint sealers where required for mock-ups of other systems.

1.4 DELIVERY, STORAGE, AND HANDLING

A. Deliver materials to site in original unopened containers or bundles with labels indicating manufacturer, product name and designation, color, expiration period for use, cure time, and mixing instructions.

1.5 SITE CONDITIONS

A. Do not proceed with installation of joint sealers under unfavorable weather conditions.

B. Install elastomeric sealants when temperature is in lower third of temperature range recommended by manufacturer.

1.6 WARRANTY

A. Extended Correction Period: Extend correction period to two years.

1. Repair or replace joint sealers which fail to perform as intended, because of leaking, crumbling, hardening, shrinkage, bleeding, sagging, staining, loss of adhesion, and loss of cohesion.

PART 2 - PRODUCTS

2.1 MATERIALS

A. System Description: Provide joint sealants with backing rods and accessories.

B. Performance Requirements:

1. Select materials for compatibility with joint surfaces and indicated exposures.

2. Where not indicated, select modulus of elasticity and hardness or grade recommended by manufacturer for each application indicated.

3. Comply with applicable limitations on volatile organic compound (VOC) emissions.

C. Regulatory Requirements: Comply with applicable regulatory requirements regarding limitations on volatile organic compound (VOC) emissions limitations.

D. Elastomeric Sealants:

1. Single Component Low Modulus Silicone Sealant: ASTM C920 Type S, Class 25, Grade NS; minimum 50% expansion and compaction capability.

   a. Provide at exterior locations not exposed to traffic.

   b. Manufacturers:

      1) GE (Momentive Performance Materials)/Silpruf, Silglaz or GESIL.
      2) Dow Corning Corp./790 or 795.
      3) Pecora Corp./864 Architectural Silicone.
      4) Tremco/Spectrem 3.
      5) Substitutions: Refer to Section 01 25 00.

2. Multi-Component Polyurethane Sealant: ASTM C920, Type M, Grade NS, Class 25, non-sag; minimum 25% expansion and compaction capability.

   a. Provide at exterior locations not exposed to traffic.

   b. Manufacturers:

      1) Pecora Corp./Dynatrol II.
      2) Tremco/Dymeric 240.
      3) BASF/MasterSEal NP 2.
      4) Substitutions: Refer to Section 01 25 00.

3. Single Component Low Modulus Sealant: ASTM C920 Type S, Class 35, Grade NS; minimum 50% expansion and compaction capability.

   a. Provide at exterior locations not exposed to traffic.

   b. Manufacturers:

      1) Fortifiber Building Systems Group/Moistop Sealant.
      2) Sika Group/SikaFlex 1A+.
      3) Substitutions: Refer to Section 01 25 00.

4. Multi-Component Polyurethane Sealant: ASTM C920, Type M, Grade P, Class 25, self-leveling; minimum 25% expansion and compaction capability.

   a. Provide at traffic bearing locations.

   b. Manufacturers:

      1) Pecora Corp./Urexpan NR-200, or Dynatrol II-SG.
      2) Tremco/THC 900-901, or Vulkem 445 SSL.
      3) BASF/MasterSeal SL 2
      4) Substitutions: Refer to Section 01 25 00.

5. Mildew-Resistant Silicone Rubber Sealant: ASTM C920, Type S, Grade NS, Class 25, compounded with fungicide, specifically for mildew resistance and recommended for interior joints in wet areas.

    a. Provide at interior joints in wet areas.

    b. Manufacturers:

        1) GE (Momentive Performance Materials)/SCS 1702 Sanitary Sealant.
        2) Dow Corning Corp./786 Bathtub Caulk.
        3) Pecora Corp./898 Sanitary Mildew Resistant Sealant.
        4) Tremco/Tremsil 200.
        5) Substitutions: Refer to Section 01 25 00.

E. Non-Elastomeric Sealants:

1. Acrylic-Emulsion Sealant: ASTM C834 acrylic or latex-rubber-modified acrylic sealant, permanently flexible, non-staining and non-bleeding; recommended for general interior exposure; compatible with paints specified in Section 09 90 00.

    a. Provide at general interior applications.

    b. Manufacturers:

        1) Pecora Corp./AC-20.
        2) Tremco/Tremflex 834.
        3) Substitutions: Refer to Section 01 25 00.

2. Air Seals: Provide non-staining and non-bleeding sealers, calks, or foams appropriate to specific applications for filling openings between conditioned and unconditioned spaces.

    a. Type: As recommended by manufacturer for each specific application; compatible with adjacent materials.

    b. Manufacturers:

        1) Dow/Great Stuff.
        2) Owens Corning/EnergyComplete Air Sealant.
        3) Hilti/Foam Filler CF 812.
        4) Substitutions: Refer to Section 01 25 00.

    c. Pest Control Mesh: Openings subject to pest infiltration to have 304 stainless steel wool, material stuffed in joint before application of air seals using methods to ensure blocking of gap from pests.

    d. Exception: Annular spaces around pipes, electric cables, conduits and other openings in exterior walls shall be protected against passage of rodents by closing with cementitious grout.

1) Cementitious Grout: ASTM C1107 non-shrink, non-metallic, pre-mixed, factory-packaged, non-staining, non-corrosive; type specifically recommended by manufacturer as applicable to job condition.

F. Miscellaneous Materials:

1. Primers/Sealers: Non-staining types recommended by joint sealer manufacturer for joint surfaces to be primed or sealed.

2. Joint Cleaners: Non-corrosive types recommended by joint sealer manufacturer; compatible with joint forming materials.

3. Bond Breaker Tape: Polyethylene tape as recommended by joint sealer manufacturer where bond to substrate or joint filler must be avoided for proper performance of joint sealer.

4. Sealant Backer Rod: Compressible polyethylene foam rod or other flexible, permanent, durable non-absorptive material as recommended by joint sealer manufacturer for compatibility with joint sealer.

a. Oversize backer rod minimum 30% to 50% of joint opening.

G. Colors: As indicated, as selected by Architect from manufacturer's full range of colors where not indicated.

1. Colors: Where color is not indicated on Drawings or Finish Schedule, provide custom color as directed by Architect.

PART 3 - EXECUTION

3.1 PREPARATION

A. Prepare joint surfaces in accordance with ASTM C1193 and as recommended by joint sealer manufacturer.

B. Clean joint surfaces immediately before installation of joint sealer; remove dirt, insecure materials, moisture and other substances which could interfere with bond of joint sealer.

C. Prime or seal joint surfaces where recommended by joint sealer manufacturer; do not allow primer/sealer to spill or migrate onto adjoining surfaces.

D. Ensure protective coatings on surfaces in contact with joint sealers have been completely stripped.

3.2 INSTALLATION

A. Comply with manufacturer's printed instructions and ASTM C1193, except where more stringent requirements are shown or specified.

B. Pest Control: Install stainless steel wool prior to application of backer rods and bond breakers at air seal and as required to ensure complete pest blockage at joints where pest intrusion is a potential.

C. Set sealant backer rods at proper depth or position in joint to coordinate with other work, including installation of bond breakers and sealant; do not leave voids or gaps between ends of backer rods.

1. Do not stretch, twist, puncture or tear backer rods.

D. Install bond breaker tape as required to avoid three-sided bond of sealant to substrate and where required by manufacturer's recommendations to ensure joint sealers will perform properly.

E. Size materials to achieve required width/depth ratios.

F. Employ installation techniques that will ensure joint sealers are deposited in uniform, continuous ribbons without gaps or air pockets, with complete "wetting" of bond surfaces equally on opposite sides.

G. Joint Configuration: Fill sealant joint to a slightly concave surface, slightly below adjoining surfaces, unless otherwise indicated.

H. Where horizontal joints are between a horizontal surface and vertical surface, fill joint to form a slight cove, so that joint will not trap moisture or dirt.

I. Install joint sealers to depths recommended by joint sealer manufacturer but within the following general limitations, measured at center (thin) section of bead.

1. Horizontal Joints: 75% width with minimum depth of 3/8".
2. Elastomeric Joints: 50% width with minimum depth of 1/4".
3. Non-Elastomeric Joints: 75% to 125% of joint width.

J. Spillage: Do not allow sealants or compounds to overflow or spill onto adjoining surfaces, or to migrate into voids of adjoining surfaces.

1. Clean adjoining surfaces by whatever means may be necessary to eliminate evidence of spillage.

K. Cure joint sealers in compliance with manufacturer's instructions and recommendations to obtain high early bond strength, internal cohesive strength and surface durability.

L. Maintain finished joints free of embedded matter, ridges and sags.

END OF SECTION

SECTION 08 11 10

HOLLOW METAL DOORS AND FRAMES

PART 1 - GENERAL

1.1 SUMMARY

A. Section Includes: Provide full flush steel (hollow metal) doors and pressed steel frames, including anchors and silencers.

1. Pressed steel frames include both door and window framing.

B. Related Sections:

1. Section 08 11 25: Interior aluminum doors and frames.
2. Section 08 17 00: Integrated door opening assemblies.
3. Section 08 71 00: Door hardware.
4. Section 08 80 00: Glazing.

1.2 REFERENCES

A. Steel Door Institute (SDI): SDI-100 (ANSI/SDI A250.8) - Recommended Specifications - Standard Steel Doors and Frames.

B. National Association of Architectural Metal Manuf. (NAAMM): Hollow Metal Manual.

C. Underwriters Laboratories: Standards as applicable to fire rated doors and frames.

1. Materials tested, labeled and inspected by Warnock Hersey International are acceptable upon approval of authorities.

1.3 ADMINISTRATIVE REQUIREMENTS

A. Coordination:

1. Coordinate hardware installation with Section 08 71 00 – Door Hardware.

2. Coordinate glass installation with Section 08 80 00 - Glazing.

1.4 SUBMITTALS

A. Product Data: Submit manufacturers' literature.

B. Shop Drawings: Indicate general construction, configuration, jointing methods, reinforcement, anchorage methods, hardware locations, and locations of cut-outs.

PART 2 - PRODUCTS

2.1 SYSTEMS MANUFACTURERS

A. Amweld Building Products Inc.

B. Ceco Door Division Assa Abloy Door Group.

C. Curries Division Assa Abloy Door Group.

D. Door Components, Inc.

E. Republic Doors and Frames.

F. Krieger Steel Products Co.

G. Substitutions: Refer to Section 01 25 00.

2.2 MATERIALS

A. System Description: Provide full flush steel (hollow metal) doors and pressed steel frames, including anchors and silencers.

B. Doors: Hollow metal flush steel door, 1-3/4" thick.

1. Typical: Full flush with steel channel or welded edge; close top with flush end closer treatment, bottom optional flush or recessed channel; steel stiffened core, insulated at exterior doors; continuous welded seam.

2. Interior Doors: Minimum 0.042” (18-gage).

3. Exterior Doors: Minimum 0.053” (16-gage).

4. Glazed and Louver Doors: Provide systems as indicated on Drawings.

C. Frames:

1. Exterior Frames: Welded (pre-assembled) type.

2. Interior Frames: Knockdown (field-assembled) type; provide 3/8” back bend return on frames at gypsum board.

3. Gage: Minimum 0.053” (16-gage) interior frames, 0.067” (14-gage) exterior frames.

4. Door Silencers: Manufacturer's standard resilient type; removable for replacement.

5. Mortar Guard Boxes: Minimum 0.026” (22-gage) mortar guard boxes welded in place; provide where frames may be grouted.

D. Glazing Stops: Full flush type with glass centered in opening, unsecured side integral with unit, secured side fastened with flush, countersunk Allen type fasteners; minimum 0.053” (16-gage).

E. Fire Rated Units: Construct in accordance with requirements for fire rating, NFPA 252 or UL 10C, and NFPA 80.

1. Labels: Place fire rating labels where visible when doors and frames are in installed, opened position.

2. Fire Ratings: Refer to Drawings for fire rating requirements.

3. Temperature Rise Rating: Provide doors with maximum 450°F Temperature Rise Rating in 30-minute fire exposure period at doors into exit enclosures and where otherwise required by applicable codes.

F. Door Louvers:

1. Interior Doors: Stationary, sight-proof hood or Y type blades of 24-gage steel inserted into door panels full door thickness; no exposed trim.

2. Exterior Doors: Weatherproof Z-shaped blades with U-shaped frames; 1-3/8" thick; blades 1-1/2" on center; 0.053” (16 gage) welded construction.

a. Provide removable bird screens on interior faces, 1/2" by 1/2" bronze wire mesh.

2.3 FABRICATION

A. Conform to requirements of SDI (ANSI A250 Series) or NAAMM.

B. Reinforce and prepare doors and frames to receive hardware.

1. Refer to Section 08 71 00 for hardware requirements.

C. Frames:

1. Welded Frames: Accurately form and cut mitered corners of welded type frames; continuously weld on inside surfaces (fully welded); grind welded joints to smooth uniform finish.

2. Knocked Down Frames: Accurately form and miter interlocking joints of knocked down frames to maintain hairline alignment of parts when field assembled.

3. Head Reinforcement: Reinforce frames wider than 4'-0" with minimum 0.093” (12 gage) formed steel channels welded in place, flush with top of frames.

4. Doors at Glazed Panels: Reinforce jambs and heads of frames for doors which occur adjacent to glazed sidelights and partitions.

D. Door Silencers:

1. Place three single bumpers on single door frames; space equally along strike jambs.

2. Place two single bumpers on double door frames; place on frame heads.

3. Place three single bumpers for each door on door frames with removable mullions, spaced equally along strike jambs, and in addition place two single bumpers on frame heads to cushion door when mullion is removed.

E. Provide jamb anchors per SDI-100 (ANSI/SDI 250.8) and NAAMM; weld floor jamb anchors in place.

F. Provide double doors tested and approved without astragals.

1. Provide astragals for double doors when required to meet UL requirements for Class A, 3-hour rated doors only.

G. Edge Clearances:

1. Between Doors and Frames: Maximum 1/8" at head and jambs.
2. Door Sills (No Threshold): Maximum 1/2".
3. Door Sills (Threshold): Maximum 3/8" above finished floor.
4. Between Edges of Pairs of Doors: Maximum 1/8".
5. Fire Rated Doors: As required for fire ratings.

H. Finish: Comply with requirements of Section 09 90 00 – Painting and Coating for primer including application and compatibility with specified finishes.

1. Interior Units: Prime paint.

2. Exterior Exposed Units: Apply minimum A60 non-spangle galvanized coating, ASTM A924 and A653.

a. Surface treat after galvanizing to remove oils and prepare for painting and apply one coat of primer; comply with requirements in Section 09 90 00.

PART 3 - EXECUTION

3.1 INSTALLATION

A. Install doors and frames in accordance with SDI-100 (ANSI/SDI A250.8) and ANSI/SDI A250.11 or NAAMM "Hollow Metal Manual" and with manufacturer's recommendations and installation instructions.

1. Install fire rated units in conformance with fire label requirements and NFPA 80.

B. Install doors and frames plumb and square within 1/16”, and with maximum diagonal distortion of 1/32".

C. Remove and replace doors and frames damaged during delivery, storage, installation and construction.

1. Paste filler repair shall not be permitted.

D. After installation, touch-up scratched paint surfaces.

END OF SECTION

SECTION 08 11 20

INTERIOR ALUMINUM FRAMES AND DOORS

PART 1 - GENERAL

1.1 SUMMARY

A. Section Includes: Provide aluminum frames, doors, and glazed partitions, with attachments and accessories as required for complete installation.

1. Prepare frames for door hardware.

B. Related Work:

1. Section 08 41 00: Aluminum-framed entrances and storefronts.
2. Section 08 71 00: Door hardware.
3. Section 08 80 00: Glazing.

1.2 REFERENCES

A. Underwriters Laboratories Inc. (UL): Building Materials Directory.

1. Materials tested, labeled and inspected by Warnock Hersey International are acceptable upon approval of authorities.

B. National Association of Architectural Metal Manuf. (NAAMM): Metal Finishes Manual.

1.3 ADMINISTRATIVE REQUIREMENTS

A. Coordination:

1. Coordinate hardware installation with Section 08 71 00 - Door Hardware.

2. Coordinate glass installation with Section 08 80 00 - Glazing.

1.4 SUBMITTALS

A. Product Data: Submit manufacturer's literature.

B. Shop Drawings: Indicate pertinent dimensioning, general construction, component connections and locations, anchor methods and locations.

C. Samples: Submit samples of aluminum finish.

1. Submit frame corner construction.

PART 2 - PRODUCTS

2.1 SYSTEMS MANUFACTURERS

A. Wilson Partitions.

B. Western Integrated Materials, Inc.

C. RACO Interior Products.

D. Substitutions: Refer to Section 01 25 00.

2.2 MATERIALS

A. System Description: Provide aluminum frames for interior doors and glazed partitions, with attachments and accessories.

B. Interior Aluminum Frames: Knock-down (field assembled) door frames; extruded aluminum, ASTM B221, 6063-T5 alloy; profile as indicated.

1. Glazed Partition Frames: Provide extruded aluminum security type snap-in glass stops.

2. Fire Rated Frames: Provide fire rated frames as indicated, approved by California State Fire Marshal and ICBO.

3. Door Stop Gasketing: Provide continuous elastomeric vinyl gasketing at door stop.

C. Fluoropolymer Finish: Fluorocarbon polymer based on Kynar 500 or Hylar 5000.

1. Colors: Where color is not indicated on Drawings or Finish Schedule, provide custom color as directed by Architect.

D. Anodized Finish: Manufacturer’s standard anodized finish conforming to NAAMM Manual requirements for anodizing, Class I and Class II acceptable.

1. Color: Clear anodized unless otherwise indicated.

2. Color: Bronze anodized as approved by Architect.

2.3 FABRICATION

A. Fabricate aluminum frames to allow for clearances and shim spacing around perimeter; provide for thermal movement.

B. Provide anchorage devices to securely and rigidly fit frames in place.

1. Conceal anchorage devices and fasteners.

C. Accurately fit together joints and corners; match components ensuring continuity of line and design; ensure joints and connections are flush, hairline and weatherproof.

D. Provide required internal reinforcing for door hardware.

1. Refer to Section 08 71 00 for hardware requirements.

E. Apply coat of bituminous paint on concealed aluminum surfaces to be in contact with cementitious or dissimilar materials.

F. Exposed Anodized Surfaces: Apply clear lacquer protective coating, minimum 5 mils dry thickness; conform to AAMA 606.2.

PART 3 - EXECUTION

3.1 INSTALLATION

A. Install aluminum frames in accordance with recommendations of manufacturer.

1. Install fire rated units in conformance with fire label requirements and NFPA 80.

B. Ensure assemblies are plumb, level and free of warp or twist; maintain dimensional tolerances and alignment with adjacent work.

C. Use anchorage devices to securely and rigidly fasten frame assemblies to building.

D. After installation, touch-up scratched and damaged surfaces; remove and replace damaged frames where touch-up is noticeable from 5’-0” or more.

END OF SECTION

SECTION 08 14 00

WOOD DOORS

PART 1 - GENERAL

1.1 SUMMARY

A. Section Includes: Provide wood doors as indicated.

1. Provide flush face wood doors.
2. Provide panel type (stile and rail) wood doors.
3. Provide interior pressed wood (Masonite) doors.
4. Provide interior bi-fold louvered wood closet doors with hardware.
5. Contractor Option: Provide shop finished wood doors.

B. Related Work

1. Section 06 20 00: Wood door frames.
2. Section 08 11 10: Pressed steel frames.
3. Section 08 11 20: Interior aluminum frames.
4. Section 08 71 00: Door hardware.
5. Section 08 80 00: Glass and glazing for wood doors.

1.2 REFERENCES

A. North American Architectural Woodwork Standards – 3.1, (NAAWS).

B. Window and Door Manufacturer’s Association (WDMA): Guide Specifications.

C. Underwriters Laboratories Inc. (UL): Building Materials Directory.

1. Materials tested, labeled and inspected by Warnock Hersey International are acceptable upon approval of authorities.

1.3 ADMINISTRATIVE REQUIREMENTS

A. Coordination:

1. Wood Jambs: Coordinate with Section 06 20 00 – Finish Carpentry for prefit wood doors for door jambs.

2. Hardware: Coordinate hardware installation with Section 08 71 00 – Door Hardware.

3. Glazing: Coordinate glazing with Section 08 80 00 – Glazing.

4. Painting: Coordinate with Section 09 90 00 – Painting and Coating whether wood doors are to be shop finished or field painted.

1.4 SUBMITTALS

A. Product Data: Submit manufacturer's literature.

B. Shop Drawings: Indicate general construction, jointing methods, hardware locations, and locations of cut-outs.

C. Samples: Submit samples of wood doors indicating construction, veneering, and finish.

1. Submit corner section of each type of door indicated as transparent finished.
2. Submit corner section of wood panel (stile and rail) door.
3. Submit corner section of pressed interior wood door.
4. Submit shop finish for wood doors where doors are furnished shop finished.

D. Certificates: Submit manufacturer certification indicating compliance to applicable requirements of either NAAWS or WDMA Standards; note which standards were followed or if both standards have been met.

1. Wood Product Certification: Furnish certification indicating wood products are from FSC “well-managed” forests.

1.5 QUALITY ASSURANCE

A. Sustainability Requirements: Comply with *CAL*Green requirements including those relative to finish material pollution control for composite wood products formaldehyde limitations and paints and coatings.

B. Certified Wood Products: Wood products to be from forests certified “well-managed” by an agency accredited by Forest Stewardship Council (FSC).

1.6 SITE CONDITIONS

A. Do not deliver or install doors until conditions for temperature and relative humidity have been stabilized in accordance with referenced standards requirements applicable to Project location.

1.7 WARRANTY

A. Extended Correction Period: Provide for replacing, rehanging, and refinishing wood doors exhibiting defects in materials or workmanship including warp and delamination.

1. Period: Two years.

PART 2 - PRODUCTS

2.1 MATERIALS

A. System Description: Provide wood doors as indicated.

B. Solid Core Flush Wood Doors: NAAWS/Premium Grade, 5-Ply Hot Press, 1-3/4" thick solid wood framed glued block construction or particleboard core five ply construction; Contractor option to use WDMA comparable standards.

1. Manufacturers:

a. Eggers Industries Architectural Door Division.
b. Marshfield Door Systems, Inc.
c. VT Industries.
d. Substitutions: Refer to Section 01 25 00.

2. Transparent/Stained Wood Veneers: NAAWS/Premium Grade veneers for transparent/stained finish; nominal 1/40" thick before sanding, not less than 1/50” after sanding.

a. Wood Veneers: Types as indicated, as directed by Architect where not otherwise indicated.

3. Opaque Painted Wood Veneers: NAAWS/Custom Grade White Birch veneers for opaque finish; nominal 1/40" thick before sanding, not less than 1/50” after sanding.

4. Edges: Stile edges to match face veneer, minimum 1-1/8" thick after trim.

5. Core: Bond stiles and rails to core and sand prior to assembly of face veneers.

6. Bond Type: Provide Type I Bond for exterior doors, Type II Bond for interior doors.

7. Bond Type: Provide Type II Bond for interior doors.

C. Hollow Core Flush Wood Doors: NAAWS/Custom Grade, 5-Ply Hot Press, 1-3/8" thick standard hollow core five-ply construction; Contractor option to use WDMA comparable standards.

1. Manufacturers:

a. Eggers Industries Architectural Door Division.
b. Marshfield Door Systems, Inc.
c. VT Industries.
d. Substitutions: Refer to Section 01 25 00.

2. Transparent/Stained Wood Veneers: NAAWS/Custom Grade White Birch veneers for opaque finish; nominal 1/40" thick before sanding, not less than 1/50” after sanding.

a. Wood Veneers: Types as indicated, as directed by Architect where not otherwise indicated.

3. Opaque Painted Wood Veneers: NAAWS/Custom Grade White Birch veneers for opaque finish; nominal 1/40" thick before sanding, not less than 1/50” after sanding.

4. Edges: Stile edges to match face veneer, minimum 1-1/8" thick after trim.

5. Bond Type: Type II Bond, interior.

D. Panel (Stile and Rail) Doors: NAAWS/Custom Grade, configurations as indicated on Drawings; 1-3/4" thick; Contractor option to use WDMA comparable standards.

1. Manufacturers:

a. Eggers Industries Architectural Door Division.
b. Pinecrest.
c. Simpson Door Co.
d. Sun-Dor-Co.
e. Marshfield Door Systems, Inc.
f. Substitutions: Refer to Section 01 25 00.

2. Transparent/Stained Finished Solid Wood: NAAWS/Premium Grade solid wood.

a. Wood: Types as indicated, as directed by Architect where not otherwise indicated.

3. Transparent/Stained Finished Veneered Wood: NAAWS/Premium Grade veneers for transparent finish; minimum 1/30" (0.033" thick) before sanding.

a. Wood Veneers: Types as indicated, as directed by Architect where not otherwise indicated.

4. Opaque Finished Wood: Manufacturers standard softwood species and cut for stiles and rails; with panels of same species.

5. Design: As indicated and conforming with WDMA Design Group matching indicated configurations.

6. Panel Type: Raised panels unless otherwise indicated.

7. Bond Type: Provide Type I Bond for exterior doors, Type II Bond for interior doors.

8. Bond Type: Provide Type II Bond for interior doors.

E. Fire Rated Doors: 1-3/4" thick, match non-rated door appearance; comply with applicable codes; UL or Warnock Hersey rated.

1. Manufacturers:

a. Eggers Industries Architectural Door Division.
b. Marshfield Door Systems, Inc.
c. VT Industries.
d. Karona, Inc.
e. Sun-Dor-Co.
f. Substitutions: Refer to Section 01 25 00.

2. Labels: Place fire rating labels where visible when doors are installed, in opened position.

3. Fire Ratings: Refer to Drawings for fire rating requirements.

4. Core: Use wood core construction for 20 minute rated flush doors, mineral core permitted for longer ratings.

5. Temperature Rise Rating: Provide doors with maximum 450°F Temperature Rise Rating in 30-minute fire exposure period at doors into exit enclosures, for horizontal exits, and as required by applicable codes.

F. Pressed Hardboard Faced Wood Doors: Provide pressed hardboard faced wood doors in configurations indicated, as directed by Architect where not otherwise indicated, 1-3/8” thick.

1. Manufacturers:

a. Masonite Corp.
b. T.M. Cobb.
c. Lynden Door.
d. Jeld Wen Windows & Doors.
e. Substitutions: Refer to Section 01 25 00.

2. Bond Type: Type II Bond, interior.

3. Core: Manufacturer’s standard core for specified doors.

4. Finish: Manufacturer’s standard prime paint finish.

G. Bi-Fold Louvered Wood Closet Doors: Provide manufacturer’s standard wood louvered bi-folding closet doors; provide standard bi-fold hardware consisting of pulls, tracks, and pivots.

1. Manufacturers:

a. Jeld-Wen, Inc. (800.535.3936).
b. Elizabeth Shutters (888.491.6198).
c. Substitutions: Refer to Section 01 25 00.

2. Basis of Design: Jeld-Wen/Bifold Louver Doors.

H. Metal Louvers for Wood Doors: Roll formed 20 gage galvanized steel; factory primed; inverted ‘V’ type blade; sight-proof.

2.2 FABRICATION

A. Fabricate doors in accordance with requirements of specified standards.

1. Prefit wood doors.

2. Prepare doors to receive hardware in shop, refer to Section 08 71 00 for hardware requirements and templates.

3. Factory machine doors for mortise hardware.

B. Bevel strike edge of single-acting doors, 1/8" in 2".

1. Radius strike edge of double-acting swing doors 2-1/8".

C. Fire Rated Doors: Fabricate fire rated doors in accordance with requirements of Underwriters' Laboratories (UL) or Warnock Hersey International.

1. Provide fire rated doors with maximum allowable edge strips, of wood species to match face veneers.

2. Provide doors with blocking designed for addition of closers, even where doors are not indicated to receive closers.

3. Provide astragals and metal edge trim for double doors, in accordance with requirements for fire rated doors.

D. Make cut-outs and provide matching wood stops for glass; profiles as indicated, type as selected by Architect where not otherwise indicated.

1. Fire Rated Doors: Provide minimum 18 gage metal stops conforming to fire rating requirements.

E. Shop Finished Doors (Contractor Option): Conform to requirements specified in Section 09 90 00 – Painting and Coating.

1. Colors: Where color is not indicated on Drawings or Finish Schedule, provide custom color as directed by Architect.

PART 3 - EXECUTION

3.1 INSTALLATION

A. Install wood doors in accordance with manufacturer's recommendations and installation instructions, and reference standards, plumb and square, and with maximum diagonal distortion of 1/16".

1. Install fire rated wood doors in accordance with requirements for specified fire label and requirements of NFPA 80.

a. Field cutting of fire rated doors shall not be acceptable.

B. Rehang or replace doors which do not swing or operate freely.

3.2 PROTECTION

A. Protection: Protect doors as recommended by door manufacturer to ensure doors are without damage at time of substantial completion.

1. Shop Finished Doors: Refinish or replace damaged doors.

END OF SECTION

SECTION 08 31 00

ACCESS DOORS AND PANELS

PART 1 - GENERAL

1.1 SUMMARY

A. Section Includes: Provide access doors set in finished surfaces.

1. Provide access doors and panels as required for access to controls and valves behind finished surfaces.

2. Coordinate with various trades for controls and valves which may be concealed.

1.2 SUBMITTALS

A. Product Data: Furnish manufacturer's literature.

B. Shop Drawings: Indicate locations of access doors required but not indicated on Architectural Drawings.

PART 2 - PRODUCTS

2.1 SYSTEMS MANUFACTURERS

A. Milcor Inc.

B. Karp Associates, Inc.

C. J.L. Industries.

D. Nystrom Building Products.

E. Elmdor Manufacturing Co.

F. Substitutions: Refer to Section 01 25 00.

2.2 MATERIALS

A. System Description: Provide access doors and panels set in finished surfaces.

B. Regulatory Requirements: Where doors and panels are in fire rated assemblies provide assemblies listed in Underwriters Laboratories, Inc. "Classified Building Materials Index" for rating shown.

1. Provide UL label on each rated access door.

2. Materials tested, labeled and inspected by Warnock Hersey International are acceptable upon approval of authorities.

C. Access Doors and Panels: Provide access door and panel assemblies consisting of an integral unit with flush metal doors and panels, complete and ready for installation.

1. Wall Units: Match Milcor/Style M flush panel style; stainless steel.

2. Units Mounted in Plaster: Match MIlcor/Style K, flush panel style. Stainless Steel

3. Gypsum Board Ceilings: Match Milcor/Style ATR recessed panel style to receive gypsum board insert with edges filled and taped. Stainless Steel.

D. Hinges: Provide continuous piano type hinge.

E. Locking Devices: Provide flush, key-operated cylinder lock for each access door; provide two keys per lock and key locks alike, unless otherwise scheduled.

F. Stainless Steel: Where indicated provide Type 304 corrosion resistant nonmagnetic stainless-steel access doors and frames.

2.3 FABRICATION

A. Size Variations: Obtain Architect's acceptance of manufacturer's standard size units which may vary slightly from sizes shown or scheduled.

B. Fabricate units of continuous welded steel construction; grind welds smooth and flush with adjacent surfaces.

C. Provide attachment devices and fasteners of type required for specific job conditions.

PART 3 - EXECUTION

3.1 EXAMINATION

A. Examine areas and conditions under which access doors are to be installed.

1. Do not proceed with work until unsatisfactory conditions are corrected; installation signifies acceptance of conditions.

B. Obtain specific locations and sizes for required access doors from trades requiring access to concealed equipment; coordinate installation with work of other trades.

3.2 INSTALLATION

A. Comply with manufacturer's installation instructions for access doors.

1. Install fire rated access doors in accordance applicable code requirements and with requirements of NFPA 80.

B. Set frames accurately in position and securely attach to supports with face panels plumb or level in relation to adjacent finish surfaces.

C. Adjust hardware and doors after installation for proper operation.

3.3 PROTECTION

A. Remove and replace doors and frames that are warped, bowed, or otherwise damaged.

END OF SECTION

SECTION 08 33 00

OVERHEAD COILING DOORS

PART 1 - GENERAL

1.1 SUMMARY

A. Section Includes: Provide overhead coiling (roll-up) door systems with curtains, guides, counterbalance, hardware, and accessories as required for complete, operational installation.

B. Related Sections:

1. Section 05 50 00: Steel frames at openings.

1.2 SUBMITTALS

A. Product Data: Submit manufacturer's literature.

B. Shop Drawings: Indicate pertinent dimensioning, general construction, component connections and details, anchorage methods, and hardware locations.

PART 2 - PRODUCTS

2.1 SYSTEMS MANUFACTURERS

A. Cornell Iron Works.

B. The Cookson Co.

C. Overhead Door Corp.

D. Substitutions: Refer to Section 01 25 00.

2.2 MATERIALS

A. System Description: Provide overhead coiling (roll-up) door systems with curtains, guides, counterbalance, hardware, and accessories.

B. Regulatory Requirements (Fire Rated Doors): Where indicated provide assemblies that comply with NFPA 80, tested in accordance with ASTM E152, and listed in Underwriters Laboratories (UL) Building Materials Directory, and bearing UL label.

1. Materials tested, labeled and inspected by Warnock Hersey International are acceptable upon approval of authorities.

2. Oversized Doors: Doors exceeding 120-sf or 24-feet in any length, shall have UL "Certificate of Inspection for Oversize Doors", in lieu of label.

C. Overhead Coiling Doors: Fabricate doors of continuous length for width of door without splices.

1. Crank Hoist Manually Operated Doors: Provide crank hoist operator with maximum 5-lbs. effort to turn crank; door to be easily stopped in any position and remain in position until movement is reactivated.

D. Components:

1. Curtain: Flat-faced interlocking slats, ends of alternate slats fitted with end locks; bottom fitted with angles to provide reinforcement and positive contact with floor when curtain is closed.

a. Slats: Aluminum; ASTM B221, alloy 6063.

b. Color selected from manufacturer’s standard paint colors.

2. Curtain Guides: Formed steel angles of required sizes and configurations.

3. Roller Shaft (Counterbalance): Steel pipe and helical steel spring system capable of producing torque to assure easy operation of curtain from any position; adjustable spring tension.

4. Housing: Minimum 24-gage steel, internally reinforced to maintain rigidity and form.

E. Hardware: Manufacturer's standard hardware for door types specified.

1. Locks: Cylindrical.

a. Keying: Keyed in accordance with Section 08 71 00 – Door Hardware.

PART 3 - EXECUTION

3.1 INSTALLATION

A. Install overhead coiling doors, complete, in accordance with manufacturer's instructions and recommendations.

1. Install fire rated doors in accordance with requirements for indicated fire label and NFPA Bulletin No. 80.

2. Coordinate installation of electric operators and controls with electrical service.

B. Fit, align, lubricate, and adjust complete door assembly level and plumb. Provide smooth operation.

3.2 FIELD QUALITY CONTROL

A. Test door closing systems operation by smoke detector fire release system.

END OF SECTION

SECTION 08 44 10

GLAZED WINDOW WALL ASSEMBLIES

PART 1 - GENERAL

1.1 SUMMARY

A. Section Includes: Provide factory finished aluminum framed window wall systems including glass, glazing materials, structural anchors, attachments, shims, and accessories as required for complete weather-tight installation.

1. Window wall systems include storefront systems, curtain wall systems, fixed and operable windows, and aluminum and glass entry door systems, including glazing and hardware.

B. Related Work:

1. Section 07 90 00: Perimeter sealants and back-up materials.
2. Section 08 42 30: Automatic entrances.
3. Section 08 51 10: Aluminum windows.
4. Section 08 71 00: Cylinders for door locks
5. Section 08 71 15: Low energy automatic door operators.

1.2 REFERENCES

A. American Architectural Manufacturers Association (AAMA): Metal Curtain Wall, Window, Store Front and Entrance Guide Specifications Manual.

B. Glass Association of North America (GANA): Glazing Manual and Sealant Manual.

C. National Association of Architectural Metal Manuf. (NAAMM): Metal Finishes Manual.

D. Definitions: National Association of Architectural Metal Manufacturers (NAAMM), Glossary of Architectural Metal Terms.

1.3 ADMINISTRATIVE REQUIREMENTS

A. Design/Build: Provide special engineering for glazed window wall assemblies to ensure they comply with applicable codes and Contract Documents.

B. Coordination: Coordinate methods for making junctures with adjacent surfaces watertight with Section 07 90 00 – Joint Sealants.

1.4 SUBMITTALS

A. Product Data: Submit manufacturer's specifications and product data for window wall system, glass, and major manufactured components.

B. Shop Drawings: Indicate pertinent dimensioning, clearances, general construction, anchorage locations, and typical details.

1. Include elevations at 1/4 scale, typical unit elevations at 1" scale and half or full-size detail sections of typical composite members.

2. Indicate joint systems, expansion provisions and glazing details.

C. Test Reports: Submit laboratory reports of tests run on typical section of window wall system.

1. Test for Air Infiltration: ASTM E283 at 6.24-psf pressure difference.

2. Test for Water Penetration under Static Pressure: ASTM E331 using static air pressure difference of minimum 20% of inward acting design wind load pressure, but not less than 6.24-psf.

3. Test for Water Penetration under Dynamic Pressure: AAMA 501.1.

4. Test for Structural Performance: ASTM E330. Minimum test loads shall be those specified.

a. Minimum ultimate loads shall be loads specified multiplied by factors of safety specified in California Building Code.

b. Measure deflections at member center lines and other critical points as deemed appropriate.

c. Safety Factor: Design for specified pressures with no glass breakage, no permanent damage to fasteners, and no permanent deformation of framing exceeding 0.2% of member clear span.

1) Glass safety factor relates to testing procedure, not occurrence of glass breakage in final installation.

D. Design/Build Certificates: Submit certification signed by California licensed structural engineer indicating compliance with Contract Documents and code requirements.

1.5 QUALITY ASSURANCE

A. Sustainability Requirements: Comply with *CAL*Green requirements including those relative to energy efficiency.

B. Installer Qualifications: Firm acceptable to system manufacturer and with not less than five years successful experience installing systems of comparable type and size.

1.6 WARRANTY

A. Extended Correction Period: Provide for correcting failure of system to resist damage from anticipated sources including damage from wind and water penetration.

1. Repair or replace units which fail in materials or workmanship.

a. Excessive air infiltration.
b. Excessive deflections.
c. Deterioration of finish and deterioration of metal.
d. Defects in weather-stripping.
e. Defects in glass.

2. Period: Two years.

B. Manufacturer’s Warranty: Submit manufacturer’s warranty including special manufacturer services as required for manufacturer’s warranty.

1. Period: 20 years.

2. Manufacturer's warranty shall not detract from requirements of extended correction period nor from Owner’s rights under implied and expressed warranties regardless of wording of manufacturer’s warranty.

PART 2 - PRODUCTS

2.1 SYSTEMS MANUFACTURERS

A. Arcadia, Inc.

B. Kawneer, an Arconic Company.

C. Oldcastle BuildingEnvelope.

D. EFCO Corporation.

E. TRACO.

F. C.R. Laurence, United States Aluminum Div.

G. Substitutions: Refer to Section 01 25 00.

2.2 MATERIALS

A. System Description: Provide factory finished aluminum framed window wall systems including glass, glazing materials, structural anchors, attachments, shims, and accessories, and including storefronts, curtain walls, windows, and entry doors.

B. Regulatory Requirements: Comply with requirements of applicable codes.

1. Safety Glass: Comply with applicable building code, CPSC 16 CFR 1201, and pass ANSI Z97.1.

2. Accessibility: Provide for assuring access for persons with disabilities in accordance with state and federal regulations.

a. California Regulations: Comply with California Building Standards Code.

b. Federal Regulations: Comply with Americans with Disabilities Act (ADA) Standards.

3. Energy: Comply with California Energy Commission requirements regarding energy performance of window wall assemblies.

a. Manufacturer shall be responsible for providing information required by authorities necessary to verify conformance.

b. Entire assembly, including glass and glazing, shall be certified by National Fenestration Rating Council (NFRC) and shall bear NFRC Label indicating energy performance technical information.

C. Design Criteria: Provide complete system with joints, gaps, and penetrations made watertight.

D. Performance Criteria:

1. Deflections and Thermal Movements: Size primary members for deflection limitations and temperature variations as follows; fabricate, assemble and erect work to maintain limitations.

a. Normal-to-wall deflection of L/175 of span; except L/250 of span for glass supporting members.

b. Parallel-to-wall deflection of less than 75% of glass edge clearances.

c. Thermal expansion and contraction movements resulting from not less than ambient temperature range of 100 degrees F, which may cause a material temperature range of 160 degrees F.

2. Water and Air Leakage: Installed system shall be free of significant leakage of both water and air.

a. Water leakage is defined as uncontrolled penetration of water (not including condensation) to interior of building.

b. Air leakage is defined as infiltration of air at any area of window wall, at a rate exceeding 0.06 cfm/sf of area, based on measurement of single complete module of system.

3. Condensation: Design system to prevent excessive condensation on indoor faces, with heating and ventilating system in operation, and under following conditions.

a. Outdoor: Ambient temperature 20-degrees F; 15-mph wind.

b. Indoor: Ambient temperature 75-degrees F; relative humidity of 25%.

c. Excessive Condensation: Visible water on more than 10% of interior exposed surface of any section, or accumulation or uncontrolled flow of water from condensation at any location.

E. Glazed Aluminum Framed Window Wall Systems: Systems with profiles as indicated on Drawings, **minimum 2.5”x5”;** provide extruded aluminum security type glass stops of profile to suit frame design.

1. Aluminum Type: As recommended by manufacturer for application indicated, but not less than extruded aluminum, ASTM B221, alloy 6061 or 6063 and temper T5 or T6.

a. Provide thicknesses to comply with loading requirements.

2. Finish: Clear anodized.

F. Doors, Frames, and Hardware: Barrier-free entry doors meeting code requirements for providing access for people with physical disabilities; by entrance manufacturer.

1. Type: Medium stile with 3-1/2” stiles and top rail, and 10" bottom rail.

1. Metal and Finish: Match entrance system.

2. Hardware: Provide complete hardware system except as indicated; match window wall system finish unless otherwise directed by Architect. Coordinate with Section 08 71 00 – Door Hardware.

a. Pivots/Closers: Center-hung pivots with concealed adjustable type closer, maximum 5-pound operating pressure when installed in final application.

b. Hinges: Extra heavy-duty ball bearing full mortise (butt) hinges complying with requirements specified in Section 08 71 00.

c. Closers: Concealed adjustable type closer, maximum 5-pound operating pressure when installed in final application.

d. Push/Pulls: Types as indicated on Drawings; where not otherwise indicated manufacturer's standard types as selected by Architect; match finish of similar hardware as specified in Section 08 71 00.

e. Security Locks: Manufacturer's standard.

1) Cylinders: Provided under Section 08 71 00.

f. Weather-Stripping, Sweep Strips: Manufacturer's recommended standard type, to suit application.

g. Thresholds: Maximum 1/2" height above adjacent surfaces, with maximum 1/4" vertical section and remainder maximum 1:2 slope.

G. Glass: Provide minimum thicknesses specified, but no less than thicknesses required based on window size and configuration and anticipated wind loading.

1. Manufacturers:

a. Vitro Architectural Glass (PPG).

b. Guardian Industries Corp.
c. Oldcastle Glass.
d. Viracon.
e. Substitutions: Refer to Section 01 25 00.

2. Float Glass: Select glazing quality, clear float glass, ASTM C1036; nominal thickness 1/4".

3. Tempered Glass: Select glazing quality, clear float glass, fully tempered, ASTM C1048; nominal thickness 1/4"; safety glass.

4. Tinted Glass: Manufacturer's standard tint as directed by Architect.

   a. Use one thickness of tinted glass throughout unless otherwise indicated or approved in advance by Architect.

5. Insulated Glass: Preassembled units consisting of organically sealed panes of glass enclosing a hermetically sealed dehydrated air space with minus 20-degree F dew point.

   a. Performance: Certified to ASTM E2190 by Insulating Glass Certification Council.

   b. System: Manufacturer's standard dual seal system compatible with glazing system, and including spacers, desiccant, and standard corner construction.

   c. Glass:

      1) Float Glass (Typical): Select glazing quality, clear float glass, ASTM C1036; nominal thickness 1/4".

      2) Tempered Glass (Where Indicated and Where Safety Glazing is Required): Select glazing quality, clear float glass, fully tempered, ASTM C1048; nominal thickness 1/4"; safety glass.

      3) Low Emissivity Coating: Provide high performance Low E coating on Number 2 surface, comparable to Vitro (PPG)/SolarBan 60.

      4) Tinted Glass: Manufacturer's standard tint as directed by Architect.

         a) Use one thickness of tinted glass throughout unless otherwise indicated or approved in advance by Architect.

      5) Spandrel Glass: Double density ceramic frit, heat strengthened spandrel glass; nominal 1/4" thickness.

   d. Total Unit Thickness: 1".

H. Glazing Materials: Of type recommended by system manufacturer to suit security locations and applications for glazing installation; designed to maintain glass in place and prevent movement.

1. Setting Blocks: Neoprene or EPDM, 80-90 Shore A durometer hardness; 4" long by 3/8" thick by 1/4" high; ASTM C864.

2. Spacer Shims: Neoprene or EPDM; 45-55 Shore A durometer hardness; 3" long by 3/32" thick by 1/4" high; ASTM C864.

3. Edge Blocks: Neoprene or EPDM, 60-70 Shore A durometer hardness; 4" long with minimum two per jamb located at top and bottom edges of glass; ASTM C864.

4. Glazing Gaskets: Exterior neoprene or EDPM; interior neoprene, EPDM or vinyl; miter corner joints at exterior applications; conform to ASTM C509 or C864.

5. Glazing Sealants: ASTM C920, Type S, Grade NS, elastomeric one-component silicone glazing sealants as recommended by sealant manufacture for application involved.

    a. Manufacturers:

        1) Dow Corning Corp.
        2) General Electric Co.
        3) Pecora Corp.
        4) Tremco Inc.
        5) Substitutions: Refer to Section 01 25 00.

    b. Structural Glazing: Provide high-modulus structural silicone glazing materials recommended by sealant manufacturer for applications where sealant bonds glass to metal system.

    c. Colors: Where color is not indicated on Drawings or Finish Schedule, provide custom color as directed by Architect.

I. Miscellaneous Materials:

1. Fasteners: Aluminum or non-magnetic stainless steel of type which will not cause electrolytic action or corrosion.

    a. Do not use exposed fasteners except where unavoidable for assembly or for application of hardware.

    b. Indicate exposed fasteners on shop drawings for specific approval; exposed fasteners shall be Phillips flat-head screws or Allen screws with finish matching item fastened.

    c. Provide concealed fasteners for glazing stops.

2. Steel Reinforcement and Brackets: Manufacturer's standard with minimum 2 oz. hot-dip zinc coating, ASTM A123, applied after fabrication.

3. Bituminous Paint: Cold-applied mastic, SSPC Paint 12, compounded for 30 mil thickness per coat.

4. Flashing: Provide sub-sill flashing members for fixed exterior framing; minimum 22-gage sheet aluminum of sizes and shapes indicated and required to drain water to exterior.

    a. Finish: Match adjacent aluminum primary members.

5. Anchoring Devices: Corrosion resistant type capable of supporting window wall system and superimposed design loads; design to allow adjustments of system prior to being permanently fastened in place.

2.3 FABRICATION

A. Fabricate systems to allow for adequate clearances around perimeter and to enable proper installation; allow for thermal movement within window wall construction.

B. Fabricate components allowing for accurate and rigid fit of joints and corners; match components carefully ensuring continuity of line and color, with joints and connections flush, hairline and weatherproof.

C. Provide structural reinforcing within framing members where required to maintain rigidity and as required to accommodate design loads.

D. Allow moisture entering joints and condensation occurring within framing members to drain to exterior.

1. Design drainage system to hold maximum anticipated moisture for 100-year rain cycle without overflowing.

E. Complete cutting, fitting, forming, drilling and grinding of metal work prior to cleaning, finishing, treatment, and application of coating.

F. Finishing: After fabrication, prepare surfaces for finishing in accordance with recommendations of aluminum producer and finish manufacturer.

1. Finish components of each assembly simultaneously to attain uniformity of color.

2. Sequence finishing and processing of materials in a predetermined bay-by-bay, floor-by-floor, wall-by-wall plan.

G. Weld by methods recommended by metal manufacturer and AWS; grind exposed welds smooth and restore mechanical finish; remove arises from cut edges and corners to a radius of approximately 1/64".

H. Fit and assemble work at shop to greatest extent possible; disassemble only as required for shipment and erection.

I. Reinforce work as necessary for performance requirements and for support.

1. Provide internal reinforcing for hardware.

J. Separate dissimilar materials with bituminous paint or preformed separators which will prevent corrosion.

K. Separate metal surfaces at moving joints with plastic inserts or other non-abrasive concealed inserts which permanently prevent "freeze-up" of joint.

L. Fabricate doors and apply hardware in shop. Disassemble only as required for transportation and installation.

PART 3 - EXECUTION

3.1 INSTALLATION

A. Install glazed aluminum window wall assemblies in accordance with manufacturer's recommendations and installation instructions, and to met design criteria and performance criteria indicated, for weather-tight installation.

1. Separate aluminum and other corrodible metal surfaces from sources of corrosion or electrolytic action at points of contact with other materials.

B. Ensure assembly is plumb, level and free of warp or twist; maintain dimensional tolerances and alignment with adjacent work.

C. Tolerances: Accurately align and locate components to column lines and floor levels; adjust work to conform to following tolerances.

1. Plumb: 1/8" in 10'-0"; 1/4" in 40'-0"; non-cumulative.

2. Level: 1/8" in 20'-0"; 1/4" in 40'-0"; non-cumulative.

3. Alignment: Limit offset to 1/16" where surfaces are flush or less than 1/2" out of flush and separated by less than 2" (by reveal or protruding work); otherwise limit offsets to 1/8".

4. Location: 3/8" maximum deviation from measured theoretical location (any member, and location).

D. Install anchorage devices to securely and rigidly fasten system to building.

E. Provide anchors to be installed in other work, and setting details, in time for proper installation by trades concerned; verify correct placement.

F. Set sill members and similar members in bed of compound, joint fillers or gaskets to provide weather-tight construction.

G. Install hardware in accordance with manufacturer's recommendations, using proper templates.

1. Install doors to operate freely and smoothly, with a maximum operating pressure of 5-pounds in accordance with California Building Code, Chapter 11B, Division III, Section 1133B2.5.

2. Coordinate installation of cylinders with Section 08 71 00 - Hardware.

3. Install sill members and thresholds in bed of compound, joint fillers or gaskets to provide weather-tight construction.

H. Install glass in accordance with glass manufacturer's instructions and with GANA "Glazing Manual".

1. Do not allow glass to touch metal surfaces.

3.2 CLEANING

A. Clean aluminum surfaces promptly after installation of components, exercising care to avoid damage of finish.

B. Remove excess sealant compounds, dirt and other foreign substances.

C. Mark glass after installation by crossed streamers attached to framing and held away from glass; do not apply markers to surface of glass.

D. Remove nonpermanent labels immediately after sealant cures; cure sealants for high early strength and durability.

3.3 PROTECTION

A. Remove and replace glass which is broken, chipped, cracked, abraded or damaged during construction period, including natural causes, accidents and vandalism.

3.4 FIELD QUALITY CONTROL

A. Site Tests: Conduct tests for air and water infiltration with window wall manufacturer's representative present; correct units failing tests; independent laboratory subject to Architect approval.

1. Air Infiltration: Conduct in accordance with ASTM E783 with static difference of specified and with maximum infiltration of 1.5 times amount specified.

2. Water Penetration: Conduct in accordance with ASTM E1105 at static pressure as recommended by NAAMM with no uncontrolled water penetration.

3. Water Spray Test: Conduct in accordance with AAMA 501.2 on lower two floors of building with minimum 75 lineal feet of units.

END OF SECTION

SECTION 08 51 10

ALUMINUM WINDOWS

PART 1 - GENERAL

1.1 SUMMARY

A. Section Includes: Provide aluminum windows with integral flashing, glazing, and accessories as required for complete weather-tight installation.

B. Related Work:

1. Section 07 90 00: Perimeter joint sealers and back-up material.

1.2 REFERENCES

A. American Architectural Manufacturers Association (AAMA) and Window and Door Manufacturers Association (WDMA), AAMA/WDMA 101/I.S. 2, Voluntary Specifications for Aluminum, Vinyl (PVC), and Wood Window and Glass Doors.

B. Glass Association of North America (GANA): Glazing Manual.

C. National Association of Architectural Metal Manuf. (NAAMM): Metal Finishes Manual.

1.3 SUBMITTALS

A. Product Data: Submit manufacturers' literature including test results indicating compliance with design criteria.

B. Shop Drawings: Indicate pertinent dimensioning, general construction, component connections and locations, anchor methods and locations.

C. Samples: Furnish samples of metal finish and glass.

D. Test Reports: Include laboratory test results for STC and OITC rating of units.

1.4 QUALITY ASSURANCE

A. Sustainability Requirements: Comply with *CAL*Green requirements including those relative to energy efficiency.

1.5 DELIVERY, STORAGE, AND HANDLING

A. Stack units on edge on wood strips above ground.

1.6 WARRANTY

A. Extended Correction Period: Extend correction period to two years.

1. Provide for correcting failure of Sound Transmission Coefficient rating (STC).

2. Provide for correcting failure of insulating glass. Failure includes signs of moisture on interior surfaces of insulated glass units and bond failure of laminated glass.

3. Repair or replace systems and materials which fail to perform as intended.

B. Manufacturer’s Warranty: Submit manufacturer’s warranty including special manufacturer services as required for manufacturer’s warranty.

1. Period: 20 years.

2. Manufacturer's warranty shall not detract from requirements of extended correction period nor from Owner’s rights under implied and expressed warranties regardless of wording of manufacturer’s warranty.

PART 2 - PRODUCTS

2.1 SYSTEMS MANUFACTURERS

A. Kawneer, an Arconic Company.

B. EFCO Corporation.

C. U.S. Aluminum Division, C.R. Laurence Company, Inc.

D. Arcadia, Inc.

E. Substitutions: Refer to Section 01 25 00.

2.2 MATERIALS

A. System Description: Provide quality aluminum windows with glazing, hardware, and accessories as indicated.

1. Manufacturer: Provide each type of window by single manufacturer. Provide all windows by single manufacturer where all types are available from approved manufacturer.

2. Standards: Conform to AAMA/WDMA 101/I.S.2, types as indicated.

A. Regulatory Requirements: Comply with California Building Code.

1. Safety Glass Standards: Comply with California Building Code and CPSC 16 CFR 1201, and pass ANSI Z97.1.

2. Energy Requirements: Comply with California Energy Commission requirements regarding energy performance of windows.

a. Manufacturer shall be responsible for providing information required by authorities necessary to verify conformance.

b. Entire assembly, including glass and glazing, shall be certified by National Fenestration Rating Council (NFRC) and shall bear NFRC Label indicating energy performance technical information.

B. Performance Requirements: Comply with applicable codes and AAMA 101 for each type of window specified, but no less than as required for Performance Class listed.

1. Structural: Withstand code required wind loads on exterior and on interior when tested in accordance with ASTM E330, without breakage, failure, or malfunction of operation.

2. Forced Entry: Provide systems conforming to ASTM F588 for windows, Performance Level 10 or AAMA 1302.5 where at ground floor and at areas accessible from decks and accessible rooftops.

3. Acoustical Ratings: Provide windows that have been tested under ASTM E90 with minimum Sound Transmission Class (STC) rating and Outdoor Indoor Transmission Class (OITC) ratings as indicated on Drawings.

4. Label: "AAMA Quality Certified" label is required on each window.

C. Aluminum Windows: Provide units meeting requirements of Architectural Aluminum Manufacturers Association (AAMA) Certification Program.

1. Performance Class: Not less than AAMA -CW (Commercial).

a. Provide windows and doors meeting AAMA/WDMA 101/I.S.2 performance class as required to comply with California Building Code wind loads as listed in Chapter 16.

D. Aluminum: Of sizes, shapes and profiles shown, **minimum 2.5”x5”;** alloys and tempers as recommended by manufacturer and processor to comply with requirements for performance, fabrication, and finish application.

1. Thermal Breaks: Provide units with thermal breaks in metal to prevent transfer of temperature between interior and exterior surfaces; conform to AAMA 1502 with factor of 45.

2. Divided Lites: True divided lites required.

3. False Mullions: Provide metal or plastic removable false mullions as required to provide patterns indicated.

4. Finish: Clear Anodized Aluminum.

5. Protect finishes with manufacturer recommended methods.

E. Glass:

1. Typical: ASTM C1036, select glazing quality clear float glass; thickness nominal 1/4".

2. Insulated Glass: Preassembled units consisting of organically sealed panes of glass enclosing a hermetically sealed dehydrated air space with -20 degree F dew point.

    a. Performance: Certified to ASTM E2190 by Insulating Glass Certification Council.

    b. System: Manufacturer's standard dual seal system compatible with glazing system, and including spacers, desiccant, and standard corner construction.

    c. Glass: ASTM C1036, select glazing quality clear float glass; nominal thickness 1/4”.

        1) Safety Glass: ASTM C1048, Kind FT, fully tempered select glazing quality glass; provide where required by applicable codes and regulations; pass ANSI Z97.1.

    d. Low E Coating: High performance low emissivity coating comparable to Vitro (PPG)/SolarBan 60 on No. 2 surface.

    e. Total Unit Thickness: 1".

F. Glazing Materials: Manufacturer standard type to suit locations and applications.

G. Miscellaneous Materials:

1. Fasteners: Anodized aluminum or non-magnetic stainless steel of type not causing electrolytic action or corrosion; provide flush Phillips flat-head or Allen screws where exposed.

2. Finish exposed aluminum fasteners to match aluminum work.

3. Brackets and Reinforcements: Aluminum wherever possible, where steel units are required for higher strength or other unavoidable necessity, hot-dip galvanize after fabrication; ASTM A123 G-90.

4. Bituminous Paint: Cold applied asphalt mastic complying with SSPC-Paint 12, compounded for 30-mil thickness per coat.

H. Weather-Stripping:

1. Sliding Panels: Double woven pile complying with AAMA 2605.

2. Projecting and Fixed Panels: Neoprene gaskets complying with ASTM D2000, Designations 2BC415 to 3BC620.

I. Hardware: Manufacturer's standard secure hardware as approved by Architect; fabricated from aluminum, stainless steel, or corrosion resistant material compatible with aluminum; conform to AAMA 101.

1. Operable Units: Deadlock latch mechanism, constructed to prevent accidental lockout and accidental damage if closed in locked position;

a. Include feature to permit locking operable windows in 4" open position.

J. Screens: Provide manufacturer's standard screens for windows and conforming to ANSI/SMA 2005; frames finished to match windows.

2.3 FABRICATION

A. Fabricate units to allow for clearances and shim spacing around perimeter to enable installation; provide for thermal movement and slope and weep sills for drainage.

B. Provide anchorage devices to securely and rigidly fit windows in place.

C. Accurately fit together joints and corners; match components ensuring continuity of line and design; ensure joints and connections are flush, hairline and weatherproof.

D. Apply coat of bituminous paint on concealed aluminum surfaces to be in contact with cementitious or dissimilar materials.

E. Glass Installation: Conform to requirements in GANA "Glazing Manual"; glass shall not touch metal.

PART 3 - EXECUTION

3.1 PREPARATION

A. Examine surfaces of openings and verify dimensions.

B. Installation of units constitutes acceptance of existing conditions.

3.2 INSTALLATION

A. Assemble and anchor various components to allow for expansion and contraction, maintaining weather-tight condition.

B. Install units in strict compliance with manufacturer's recommendations and installation instructions.

C. Install work plumb, straight, square, level and in their proper elevation, plane and location, and in proper alignment with other work.

D. Anchor securely in place, separate aluminum and other corrodible metal surfaces from corrosion and electrolytic action with other materials.

E. Upon completion of installation, remove protective coatings or coverings and clean aluminum surfaces.

F. Adjust hardware for proper operation.

1. Windows to operate freely and smoothly, with maximum operating pressure of 5-pounds.

3.3 FIELD QUALITY CONTROL

A. Site Tests: Conduct tests for air and water infiltration with window manufacturer's representative present; correct units failing tests.

1. Test: Conduct in accordance with AAMA 502.

2. Air Infiltration: Maximum infiltration of 1.5 times amount specified.

3. Water Penetration: Conduct at pressures recommended by AAMA for specified units.

3.4 CLEANING

A. Clean windows including glazing using methods recommended by window manufacturer; minimum wash down with solution of mild detergent in warm water applied with soft, clean cloths.

1. Take care to remove dirt from corners.
2. Wipe surfaces clean.

3.5 PROTECTION

A. Protect units and glazing from damage from construction operations and from vandalism.

B. Repair or replace damaged metal components. Touch-up damaged finishes.

C. Remove and replace glass that is broken, chipped, cracked, abraded or damaged during construction period, including natural causes, accidents and vandalism.

END OF SECTION

SECTION 08 71 00 – DOOR HARDWARE

PART 1 - GENERAL

1.1 RELATED DOCUMENTS

A. Drawings and general provisions of the Contract, including General and Supplementary Conditions and Division 01 Specification Sections, apply to this Section.

1.2 SUMMARY

A. Section includes:

1. Mechanical and electrified door hardware for:

a. Swinging doors.
b. Gates.

B. Exclusions: Unless specifically listed in hardware sets, hardware is not specified in this section for:

1. Windows
2. Cabinets (casework), including locks in cabinets
3. Signage
4. Toilet accessories
5. Overhead doors

C. Related Sections:

1. Division 01 Section “Alternates” for alternates affecting this section.
2. Division 07 Section “Joint Sealants” for sealant requirements applicable to threshold installation specified in this section.
3. Division 26 sections for connections to electrical power system and for low-voltage wiring.
4. Division 28 sections for coordination with other components of electronic access control system.

1.3 REFERENCES

A. UL - Underwriters Laboratories

1. UL 10B - Fire Test of Door Assemblies
2. UL 10C - Positive Pressure Test of Fire Door Assemblies
3. UL 1784 - Air Leakage Tests of Door Assemblies
4. UL 305 - Panic Hardware

B. ANSI - American National Standards Institute

1. ANSI/BHMA A156.1 - A156.29, and ANSI/BHMA A156.31 - Standards for Hardware and Specialties

C. California Code of Regulations

1. Title 24: California Building Standards Code

1.4 SUBMITTALS

A. General:

1. Submit in accordance with Conditions of Contract and Division 01 requirements.
2. Highlight, encircle, or otherwise specifically identify on submittals deviations from Contract Documents, issues of incompatibility or other issues which may detrimentally affect the Work.
3. Prior to forwarding submittal, comply with procedures for verifying existing door and frame compatibility for new hardware, as specified in PART 3, “EXAMINATION” article, herein.

B. Action Submittals:

1. Product Data: Product data including manufacturers’ technical product data for each item of door hardware, installation instructions, maintenance of operating parts and finish, and other information necessary to show compliance with requirements.
2. Riser and Wiring Diagrams: After final approval of hardware schedule, submit details of electrified door hardware, indicating:

    a. Wiring Diagrams: For power, signal, and control wiring and including:
        1) Details of interface of electrified door hardware and building safety and security systems.
        2) Schematic diagram of systems that interface with electrified door hardware.
        3) Point-to-point wiring.
        4) Risers.

3. Samples for Verification: If requested by Architect, submit production sample or sample installations of each type of exposed hardware unit in finish indicated, and tagged with full description for coordination with schedule.

    a. Samples will be returned to supplier in like-new condition. Units that are acceptable to Architect may, after final check of operations, be incorporated into Work, within limitations of key coordination requirements.

4. Door Hardware Schedule: Submit schedule with hardware sets in vertical format as illustrated by Sequence of Format for the Hardware Schedule as published by the Door and Hardware Institute. Indicate complete designations of each item required for each door or opening, include:

    a. Door Index; include door number, heading number, and Architects hardware set number.
    b. Opening Lock Function Spreadsheet: List locking device and function for each opening.
    c. Type, style, function, size, and finish of each hardware item.
    d. Name and manufacturer of each item.
    e. Fastenings and other pertinent information.
    f. Location of each hardware set cross-referenced to indications on Drawings.
    g. Explanation of all abbreviations, symbols, and codes contained in schedule.
    h. Mounting locations for hardware.
    i. Door and frame sizes and materials.
    j. Name and phone number for local manufacturer's representative for each product.

k. Operational Description of openings with any electrified hardware (locks, exits, electromagnetic locks, electric strikes, automatic operators, door position switches, magnetic holders or closer/holder units, and access control components). Operational description should include how door will operate on egress, ingress, and fire and smoke alarm connection.
   1) Submittal Sequence: Submit door hardware schedule concurrent with submissions of Product Data, Samples, and Shop Drawings. Coordinate submission of door hardware schedule with scheduling requirements of other work to facilitate fabrication of other work that is critical in Project construction schedule.

5. Key Schedule:

   a. After Keying Conference, provide keying schedule listing levels of keying as well as explanation of key system's function, key symbols used and door numbers controlled.
   b. Use ANSI/BHMA A156.28 “Recommended Practices for Keying Systems” as guideline for nomenclature, definitions, and approach for selecting optimal keying system.
   c. Provide 3 copies of keying schedule for review prepared and detailed in accordance with referenced DHI publication. Include schematic keying diagram and index each key to unique door designations.
   d. Index keying schedule by door number, keyset, hardware heading number, cross keying instructions, and special key stamping instructions.
   e. Provide one complete bitting list of key cuts and one key system schematic illustrating system usage and expansion.
      1) Forward bitting list, key cuts and key system schematic directly to Owner, by means as directed by Owner.

   f. Prepare key schedule by or under supervision of supplier, detailing Owner’s final keying instructions for locks.

6. Templates: After final approval of hardware schedule, provide templates for doors, frames and other work specified to be factory prepared for door hardware installation.

C. Informational Submittals:

1. Qualification Data: For Supplier and Installer.
2. Product Certificates for electrified door hardware, signed by manufacturer:

   a. Certify that door hardware approved for use on types and sizes of labeled fire-rated doors complies with listed fire-rated door assemblies.

3. Certificates of Compliance:

   a. Certificates of compliance for fire-rated hardware and installation instructions if requested by Architect or Authority Having Jurisdiction.
   b. Installer Training Meeting Certification: Letter of compliance, signed by Contractor, attesting to completion of installer training meeting specified in “QUALITY ASSURANCE” article, herein.
   c. Electrified Hardware Coordination Conference Certification: Letter of compliance, signed by Contractor, attesting to completion of electrified hardware coordination conference, specified in “QUALITY ASSURANCE” article, herein.

4. Product Test Reports: For compliance with accessibility requirements, based on evaluation of comprehensive tests performed by manufacturer and witnessed by qualified testing agency, for door hardware on doors located in accessible routes.
5. Warranty: Special warranty specified in this Section.

D. Closeout Submittals:

1. Operations and Maintenance Data : Provide in accordance with Division 01 and include:

a. Complete information on care, maintenance, and adjustment; data on repair and replacement parts, and information on preservation of finishes.
b. Catalog pages for each product.
c. Name, address, and phone number of local representative for each manufacturer.
d. Parts list for each product.
e. Final approved hardware schedule, edited to reflect conditions as-installed.
f. Final keying schedule
g. Copies of floor plans with keying nomenclature
h. As-installed wiring diagrams for each opening connected to power, both low voltage and 110 volts.
i. Copy of warranties including appropriate reference numbers for manufacturers to identify project.

1.5 QUALITY ASSURANCE

A. Product Substitutions: Comply with product requirements stated in Division 01 and as specified herein.

1. Where specific manufacturer’s product is named and accompanied by “No Substitute,” including make or model number or other designation, provide product specified. (Note: Certain products have been selected for their unique characteristics and particular project suitability.)

a. Where no additional products or manufacturers are listed in product category, requirements for “No Substitute” govern product selection.

2. Where products indicate “acceptable manufacturers” or “acceptable manufacturers and products”, provide product from specified manufacturers, subject to compliance with specified requirements and “Single Source Responsibility” requirements stated herein.

B. Supplier Qualifications and Responsibilities: Recognized architectural hardware supplier with record of successful in-service performance for supplying door hardware similar in quantity, type, and quality to that indicated for this Project.

1. Warehousing Facilities: In Project's vicinity.
2. Scheduling Responsibility: Preparation of door hardware and keying schedules.
3. Engineering Responsibility: Preparation of data for electrified door hardware, including Shop Drawings, based on testing and engineering analysis of manufacturer's standard units in assemblies similar to those indicated for this Project.
4. Coordination Responsibility: Coordinate installation of electronic security hardware with Architect and electrical engineers and provide installation and technical data to Architect and other related subcontractors.

a. Upon completion of electronic security hardware installation, inspect and verify that all components are working properly.

C. Installer Qualifications: Qualified tradesmen, skilled in application of commercial grade hardware with record of successful in-service performance for installing door hardware similar in quantity, type, and quality to that indicated for this Project.

D. Single Source Responsibility: Obtain each type of door hardware from single manufacturer.

1. Provide electrified door hardware from same manufacturer as mechanical door hardware, unless otherwise indicated.
2. Manufacturers that perform electrical modifications and that are listed by testing and inspecting agency acceptable to authorities having jurisdiction are acceptable.

E. Fire-Rated Door Openings: Provide door hardware for fire-rated openings that complies with NFPA 80 and requirements of authorities having jurisdiction. Provide only items of door hardware that are listed and are identical to products tested by Underwriters Laboratories, Intertek Testing Services, or other testing and inspecting organizations acceptable to authorities having jurisdiction for use on types and sizes of doors indicated, based on testing at positive pressure and according to NFPA 252 or UL 10C and in compliance with requirements of fire-rated door and door frame labels.

F. Smoke- and Draft-Control Door Assemblies: Where smoke- and draft-control door assemblies are required, provide door hardware that meets requirements of assemblies tested according to UL 1784 and installed in compliance with NFPA 105.

1. Air Leakage Rate: Maximum air leakage of 0.3 cfm/sq. ft. (3 cu. m per minute/sq. m) at tested pressure differential of 0.3-inch wg (75 Pa) of water.

G. Electrified Door Hardware: Listed and labeled as defined in NFPA 70, Article 100, by testing agency acceptable to authorities having jurisdiction.

H. Means of Egress Doors: Latches do not require more than 5 lbf (67 N) to release latch. Locks do not require use of key, tool, or special knowledge for operation.

I. Accessibility Requirements: For door hardware on doors in an accessible route, comply with governing accessibility regulations cited in “REFERENCES” article, herein.

1. Provide operating devices that do not require tight grasping, pinching, or twisting of wrist and that operate with force of not more than 5 lbf (22.2 N).
2. Maximum opening-force requirements:

    a. Interior, Non-Fire-Rated Hinged Doors: 5 lbf (22.2 N) applied perpendicular to door.
    b. Sliding or Folding Doors: 5 lbf (22.2 N) applied parallel to door at latch.
    c. Fire Doors: Minimum opening force allowable by authorities having jurisdiction.

3. Bevel raised thresholds with slope of not more than 1:2. Provide thresholds not more than 1/2 inch (13 mm) high.
4. Adjust door closer sweep periods so that, from open position of 70 degrees, door will take at least 3 seconds to move to 3 inches (75 mm) from latch, measured to leading edge of door.

J. Keying Conference: Conduct conference at Project site to comply with requirements in Division 01.

1. Attendees: Owner, Contractor, Architect, Installer, Owner’s Security Consultant, and Supplier.
2. Incorporate keying conference decisions into final keying schedule after reviewing door hardware keying system including:

    a. Function of building, flow of traffic, purpose of each area, degree of security required, and plans for future expansion.
    b. Preliminary key system schematic diagram.
    c. Requirements for key control system.
    d. Requirements for access control.

e. Address for delivery of keys.

K. Pre-installation Conference: Conduct conference at Project site to comply with requirements in Division 01.

1. Review and finalize construction schedule and verify availability of materials, Installer's personnel, equipment, and facilities needed to make progress and avoid delays.
2. Inspect and discuss preparatory work performed by other trades.
3. Inspect and discuss electrical roughing-in for electrified door hardware.
4. Review sequence of operation for each type of electrified door hardware.
5. Review required testing, inspecting, and certifying procedures.

L. Coordination Conferences:

1. Installation Coordination Conference: Prior to hardware installation, schedule and hold meeting to review questions or concerns related to proper installation and adjustment of door hardware.

a. Attendees: Door hardware supplier, door hardware installer, Contractor.
b. After meeting, provide letter of compliance to Architect, indicating when meeting was held and who was in attendance.

2. Electrified Hardware Coordination Conference: Prior to ordering electrified hardware, schedule and hold meeting to coordinate door hardware with security, electrical, doors and frames, and other related suppliers.

a. Attendees: electrified door hardware supplier, doors and frames supplier, electrified door hardware installer, electrical subcontractor, Owner, Owner’s security consultant, Architect and Contractor.
b. After meeting, provide letter of compliance to Architect, indicating when coordination conference was held and who was in attendance.

1.6 DELIVERY, STORAGE, AND HANDLING

A. Inventory door hardware on receipt and provide secure lock-up for hardware delivered to Project site.

B. Tag each item or package separately with identification coordinated with final door hardware schedule, and include installation instructions, templates, and necessary fasteners with each item or package.

1. Deliver each article of hardware in manufacturer’s original packaging.

C. Project Conditions:

1. Maintain manufacturer-recommended environmental conditions throughout storage and installation periods.
2. Provide secure lock-up for door hardware delivered to Project, but not yet installed. Control handling and installation of hardware items so that completion of Work will not be delayed by hardware losses both before and after installation.

D. Protection and Damage:

1. Promptly replace products damaged during shipping.

2. Handle hardware in manner to avoid damage, marring, or scratching. Correct, replace or repair products damaged during Work.
3. Protect products against malfunction due to paint, solvent, cleanser, or any chemical agent.

E. Deliver keys to manufacturer of key control system for subsequent delivery to Owner.

F. Deliver keys and permanent cores to Owner by registered mail or overnight package service.

1.7 COORDINATION

A. Coordinate layout and installation of floor-recessed door hardware with floor construction. Cast anchoring inserts into concrete. Concrete, reinforcement, and formwork requirements are specified in Division 03.

B. Installation Templates: Distribute for doors, frames, and other work specified to be factory prepared. Check Shop Drawings of other work to confirm that adequate provisions are made for locating and installing door hardware to comply with indicated requirements.

C. Security: Coordinate installation of door hardware, keying, and access control with Owner's security consultant.

D. Electrical System Roughing-In: Coordinate layout and installation of electrified door hardware with connections to power supplies and building safety and security systems.

E. Direct shipments not permitted, unless approved by Contractor.

1.8 WARRANTY

A. Special Warranty: Manufacturer's standard form in which manufacturer agrees to repair or replace components of door hardware that fail in materials or workmanship within specified warranty period.

1. Warranty Period: Years from date of Substantial Completion, for durations indicated.

a. Closers:
   1) Mechanical: 30 years.

b. Automatic Operators: 2 years
c. Exit Devices:
   1) Mechanical: 3 years.
   2) Electrified: 1 year.

d. Locksets:
   1) Mechanical: 3 years
   2) Electrified: 1 year.

e. Continuous Hinges: Lifetime warranty.
f. Key Blanks: Lifetime

2. Warranty does not cover damage or faulty operation due to improper installation, improper use or abuse.

1.9 MAINTENANCE

A. Maintenance Tools:

1. Furnish complete set of special tools required for maintenance and adjustment of hardware, including changing of cylinders.

PART 2 - PRODUCTS

2.1 MANUFACTURERS

A. Where “No Substitute” is noted, submittals and substitution requests for other products will not be considered.

B. Approval of manufacturers and/or products other than those listed as “Scheduled Manufacturer” or “Acceptable Manufacturer” in the individual article for the product category shall be in accordance with QUALITY ASSURANCE article, herein.

C. Approval of products from manufacturers indicated in “Acceptable Manufacturers” is contingent upon those products providing all functions and features and meeting all requirements of scheduled manufacturer’s product.

D. Hand of Door: Drawings show direction of slide, swing, or hand of each door leaf. Furnish each item of hardware for proper installation and operation of door movement as shown.

E. Where specified hardware is not adaptable to finished shape or size of members requiring hardware, furnish suitable types having same operation and quality as type specified, subject to Architect's approval.

2.2 MATERIALS

A. Fasteners

1. Provide hardware manufactured to conform to published templates, generally prepared for machine screw installation.
2. Furnish screws for installation with each hardware item. Finish exposed (exposed under any condition) screws to match hardware finish, or, if exposed in surfaces of other work, to match finish of this other work including prepared for paint surfaces to receive painted finish.
3. Provide concealed fasteners for hardware units exposed when door is closed except when no standard units of type specified are available with concealed fasteners. Do not use thru-bolts for installation where bolt head or nut on opposite face is exposed in other work unless thru-bolts are required to fasten hardware securely. Review door specification and advise Architect if thru-bolts are required.
4. Install hardware with fasteners provided by hardware manufacturer.

B. Provide screws, bolts, expansion shields, drop plates and other devices necessary for hardware installation.

1. Where fasteners are exposed to view: Finish to match adjacent door hardware material.

C. Cable and Connectors: Hardwired Electronic Access Control Lockset and Exit Device Trim:

1. Data: 24AWG, 4 conductor shielded, Belden 9843, 9841 or comparable.
2. DC Power: 18 AWG, 2 conductor, Belden 8760 or comparable.
3. Provide type of data and DC power cabling required by access control device manufacturer for this installation.
4. Where scheduled in the hardware sets, provide each item of electrified hardware and wire harnesses with sufficient number and wire gauge with standardized Molex plug connectors to accommodate electric function of specified hardware. Provide Molex connectors that plug directly into connectors from harnesses, electric locking and power transfer devices. Provide through-door wire harness for each electrified locking device installed in a door and wire harness for each electrified hinge, electrified continuous hinge, electrified pivot, and electric power transfer for connection to power supplies.

2.3 HINGES

A. Manufacturers and Products:

1. Scheduled Manufacturer and Product: Ives 5BB series
2. Acceptable Manufacturers and Products: Hager BB series, McKinney TA/T4A series, Stanley FBB Series

B. Requirements:

1. Provide five-knuckle ball bearing hinges conforming to ANSI/BHMA A156.1.
2. 1-3/4 inch (44 mm) thick doors, up to and including 36 inches (914 mm) wide:

    a. Exterior: Standard weight, bronze or stainless steel, 4-1/2 inches (114 mm) high
    b. Interior: Standard weight, steel, 4-1/2 inches (114 mm) high

3. 1-3/4 inch (44 mm) thick doors over 36 inches (914 mm) wide:

    a. Exterior: Heavy weight, bronze/stainless steel, 5 inches (127 mm) high
    b. Interior: Heavy weight, steel, 5 inches (127 mm) high

4. 2 inches or thicker doors:

    a. Exterior: Heavy weight, bronze or stainless steel, 5 inches (127 mm) high
    b. Interior: Heavy weight, steel, 5 inches (127 mm) high

5. Provide three hinges per door leaf for doors 90 inches (2286 mm) or less in height, and one additional hinge for each 30 inches (762 mm) of additional door height.
6. Where new hinges are specified for existing doors or existing frames, provide new hinges of identical size to hinge preparation present in existing door or existing frame.
7. Hinge Pins: Except as otherwise indicated, provide hinge pins as follows:

    a. Steel Hinges: Steel pins
    b. Non-Ferrous Hinges: Stainless steel pins
    c. Out-Swinging Exterior Doors: Non-removable pins
    d. Out-Swinging Interior Lockable Doors: Non-removable pins
    e. Interior Non-lockable Doors: Non-rising pins

8. Width of hinges: 4-1/2 inches (114 mm) at 1-3/4 inch (44 mm) thick doors, and 5 inches (127 mm) at 2 inches (51 mm) or thicker doors. Adjust hinge width as required for door, frame, and wall conditions to allow proper degree of opening.
9. Doors 36 inches (914 mm) wide or less furnish hinges 4-1/2 inches (114 mm) high; doors greater than 36 inches (914 mm) wide furnish hinges 5 inches (127 mm) high, heavy weight or standard weight as specified.

10. Provide hinges with electrified options as scheduled in the hardware sets. Provide with sufficient number and wire gage to accommodate electric function of specified hardware. Locate electric hinge at second hinge from bottom or nearest to electrified locking component.
11. Provide mortar guard for each electrified hinge specified.
12. Provide spring hinges where specified. Provide two spring hinges and one bearing hinge per door leaf for doors 90 inches (2286 mm) or less in height. Provide one additional bearing hinge for each 30 inches (762 mm) of additional door height.

2.4 CONTINUOUS HINGES

A. Aluminum Geared

1. Manufacturers:

a. Scheduled Manufacturer: Ives.
b. Acceptable Manufacturers: Markar, Stanley.

2. Requirements:

a. Provide aluminum geared continuous hinges conforming to ANSI/BHMA A156.26, Grade 1.
b. Provide aluminum geared continuous hinges, where specified in the hardware sets, fabricated from 6063-T6 aluminum, with 0.25-inch (6 mm) diameter Teflon coated stainless steel hinge pin.
c. Provide split nylon bearings at each hinge knuckle for quiet, smooth, self-lubricating operation.
d. Provide hinges capable of supporting door weights up to 450 pounds, and successfully tested for 1,500,000 cycles.
e. On fire-rated doors, provide aluminum geared continuous hinges that are classified for use on rated doors by testing agency acceptable to authority having jurisdiction.
f. Provide aluminum geared continuous hinges with electrified option scheduled in the hardware sets. Provide with sufficient number and wire gage to accommodate electric function of specified hardware.
g. Install hinges with fasteners supplied by manufacturer.
h. Provide hinges 1 inch (25 mm) shorter in length than nominal height of door, unless otherwise noted or door details require shorter length and with symmetrical hole pattern.

2.5 ELECTRIC POWER TRANSFER

A. Manufacturers:

a. Scheduled Manufacturer: Von Duprin EPT-10
b. Acceptable Manufacturers: ABH PT1000, Securitron CEPT-10

B. Provide power transfer with electrified options as scheduled in the hardware sets. Provide with number and gage of wires sufficient to accommodate electric function of specified hardware.

C. Locate electric power transfer per manufacturer’s template and UL requirements, unless interference with operation of door or other hardware items.

2.6 FLUSH BOLTS

A. Manufacturers:

1. Scheduled Manufacturer: Ives
2. Acceptable Manufacturers: Rockwood, Trimco

B. Requirements:

1. Provide automatic, constant latching, and manual flush bolts with forged bronze or stainless steel face plates, extruded brass levers, and with wrought brass guides and strikes. Provide 12 inch (305 mm) steel or brass rods at doors up to 90 inches (2286 mm) in height. For doors over 90 inches (2286 mm) in height increase top rods by 6 inches (152 mm) for each additional 6 inches (152 mm) of door height. Provide dust-proof strikes at each bottom flush bolt.

2.7 SURFACE BOLTS

A. Manufacturers:

1. Scheduled Manufacturer: Ives
2. Acceptable Manufacturers: Rockwood, Trimco

B. Requirements:

1. Surface bolt s to have 1” throw for maximum security with concealed mounting that prevents vandalism. Units to be constructed of heavy duty steel and cUL listed up to three (3) hours when used on the inactive door of a pair up to 8’ in height.

2.8 COORDINATORS

A. Manufacturers:

1. Scheduled Manufacturer: Ives
2. Acceptable Manufacturers: Rockwood, Trimco

B. Requirements:

1. Where pairs of doors are equipped with automatic flush bolts, an astragal, or other hardware that requires synchronized closing of the doors, provide bar-type coordinating device, surface applied to underside of stop at frame head.
2. Provide filler bar of correct length for unit to span entire width of opening, and appropriate brackets for parallel arm door closers and surface vertical rod exit device strikes. Factory-prep coordinators for vertical rod devices if required.

2.9 MORTISE LOCKS

A. Manufacturers and Products:

1. Scheduled Manufacturer and Product: Schlage L9000 series
2. Acceptable Manufacturers and Products: No substitution

B. Requirements:

1. Provide mortise locks conforming to ANSI/BHMA A156.13 Series 1000, Grade 1 Operational, Grade 1 Security, and manufactured from heavy gauge steel, containing components of steel with a zinc dichromate plating for corrosion resistance. Provide lock case that is multi-function and field reversible for handing without opening case. Cylinders: Refer to “KEYING” article, herein.
2. Provide locks with standard 2-3/4 inches (70 mm) backset with full 3/4 inch (19 mm) throw stainless steel mechanical anti-friction latchbolt. Provide deadbolt with full 1 inch (25 mm) throw, constructed of stainless steel.
3. Provide standard ASA strikes unless extended lip strikes are necessary to protect trim.
4. Provide electrified options as scheduled in the hardware sets. Where scheduled, provide a request to exit (RX) switch that is actuated with rotation of inside lever.
5. Provide motor based electrified locksets with electrified options as scheduled in the hardware sets and comply with the following requirements:

    a. Universal input voltage – single chassis accepts 12 or 24V DC to allow for changes in the field without changing lock chassis.
    b. Fail Safe/Fail Secure – changing mode between electrically locked (fail safe) and electrically unlocked (fail secure) is field selectable without opening the lock case
    c. Low maximum current draw – maximum 0.4 amps to allow for multiple locks on a single power supply.
    d. Low holding current – maximum 0.01 amps to produce minimal heat, eliminate “hot levers” in electrically locked applications, and to provide reliable operation in wood doors that provide minimal ventilation and air flow.
    e. Request to Exit Switch (RX) –
        1) Modular Design – provide electrified locks capable of using, adding, or changing a modular RX switch without opening the lock case.
        2) Monitoring – where scheduled, provide a request to exit (RX) switch that detects rotation of the inside lever.

    f. Connections – provide quick-connect Molex system standard.
    g. UL Listed – 3 hour fire door

6. Lever Trim: Solid brass, bronze, or stainless steel, cast or forged in design specified, with wrought roses and external lever spring cages. Provide thru-bolted levers with 2-piece spindles.

    a. Lever Design: Schlage 17A.
    b. Tactile Warning (Knurling): Where required by authority having jurisdiction. Provide on levers on exterior (secure side) of doors serving rooms considered to be hazardous.
    c.

2.10 ALUMINUM DOOR LOCKS – NARROW STYLE

A. Manufacturer and Product:

1. Scheduled Manufacturer and Product: Adams Rite 4900 series X 4568/9 Lever or 4590/1 Paddle
2. Acceptable Manufacturers and Products: No Substitute.

B. Requirements:

1. Provide narrow style aluminum door locks as specified. Cylinders: Refer to “KEYING” article, herein.

2. Provide locks with backset as required for door detail with full 5/8 inch (16 mm) throw latchbolt.
3. Provide manufacturer's standard strikes unless extended lip strikes are necessary to protect trim.

2.11 AUXILIARY LOCKS

A. Deadlocks:

1. Manufacturers and Products:

a. Scheduled Manufacturer and Product: Schlage L400 series
b. Acceptable Manufacturers and Products: No substitution.

2. Requirements:

a. Provide mortise deadlock series conforming to ANSI/BHMA A156 and function as specified. Cylinders: Refer to "KEYING" article, herein.
b. Provide deadlocks with standard 2-3/4 inches (70 mm) backset. Provide deadbolt with full 1 inch (25 mm) throw, constructed of stainless steel.
c. Provide manufacturer's standard strike.

2.12 EXIT DEVICES

A. Manufacturers and Products:

1. Scheduled Manufacturer and Product: Von Duprin 98/35 series
2. Acceptable Manufacturers and Products: No substitutions.

B. Requirements:

1. Provide exit devices tested to ANSI/BHMA A156.3 Grade 1, and UL listed for Panic Exit or Fire Exit Hardware. Cylinders: Refer to "KEYING" article, herein.
2. Provide touchpad type exit devices, fabricated of brass, bronze, stainless steel, or aluminum, plated to standard architectural finishes to match balance of door hardware.
3. Touchpad: Extend minimum of one half of door width. Match exit device finish, stainless steel for US26, US26D, US28, US32, and US32D finishes; and for all other finishes, provide compatible finish to exit device. No plastic inserts are allowed in touchpads.
4. Provide exit devices with dead-latching feature for security and for future addition of alarm kits and/or other electrified requirements.
5. Provide flush end caps for exit devices.
6. Provide exit devices with manufacturer's approved strikes.
7. Provide exit devices cut to door width and height. Install exit devices at height recommended by exit device manufacturer, allowable by governing building codes, and approved by Architect.
8. Mount mechanism case flush on face of doors, or provide spacers to fill gaps behind devices. Where glass trim or molding projects off face of door, provide glass bead kits.
9. Removable Mullions: 2 inches (51 mm) x 3 inches (76 mm) steel tube. Where scheduled as keyed removable mullion, provide type that can be removed by use of a keyed cylinder, which is self-locking when re-installed.
10. Where lever handles are specified as outside trim for exit devices, provide heavy-duty lever trims with forged or cast escutcheon plates. Provide vandal-resistant levers that will travel to 90-degree down position when more than 35 pounds of torque are applied, and which can easily be re-set.

a. Lever Style: Match lever style of locksets.
b. Tactile Warning (Knurling): Where required by authority having jurisdiction. Provide on levers on exterior (secure side) of doors serving rooms considered to be hazardous.

11. Provide UL labeled fire exit hardware for fire rated openings.
12. Provide factory drilled weep holes for exit devices used in full exterior application, highly corrosive areas, and where noted in hardware sets.
13. Provide electrified options as scheduled.

2.13 POWER SUPPLIES

A. Manufacturers and Products:

1. Scheduled Manufacturer and Product: Schlage or Von Duprin PS900 series
2. Acceptable Manufacturers and Products: Precision ELR series, Sargent 3500 series, Dynalock 5000 series, Securitron BPS series, Security Door Controls 600 series

B. Requirements:

1. Provide power supplies, recommended and approved by manufacturer of electrified locking component, for operation of electrified locks, electrified exit devices, magnetic locks, electric strikes, and other components requiring power supply.
2. Provide appropriate quantity of power supplies necessary for proper operation of electrified locking components as recommended by manufacturer of electrified locking components with consideration for each electrified component using power supply, location of power supply, and approved wiring diagrams. Locate power supplies as directed by Architect.
3. Provide regulated and filtered 24 VDC power supply , and UL class 2 listed.
4. Options:

a. Provide power supply, where specified, with internal capability of charging sealed backup batteries 24 VDC, in addition to operating DC load.
b. Provide sealed batteries for battery back-up at each power supply where specified.
c. Provide keyed power supply cabinet.

5. Provide power supply in an enclosure, complete, and requiring 120VAC to fused input.
6. Provide power supply with emergency release terminals, where specified, that allow release of all devices upon activation of fire alarm system complete with fire alarm input for initiating “no delay” exiting mode.

2.14 CYLINDERS

A. Manufacturers:

1. Scheduled Manufacturer: Schlage
2. Acceptable Manufacturers: No substitutions.

B. Requirements:

1. Provide cylinders/cores, from the same manufacturer of locksets, compliant with ANSI/BHMA A156.5; latest revision, Section 12, Grade 1; permanent cylinders; cylinder face finished to match lockset, manufacturer’s series as indicated. Refer to “KEYING” article, herein.

2. Provide cylinders in the below-listed configuration(s), distributed throughout the Project as indicated.

    a. Conventional Patented Open: cylinder with interchangeable core.

3. Patent Protection: Cylinders/cores requiring use of restricted, patented keys, patent-protected until the year 2029.
4. Nickel silver bottom pins.
5. Replaceable Construction Cores.

    a. Provide temporary construction cores replaceable by permanent cores, furnished in accordance with the following requirements.
        1) 3 construction control keys
        2) 12 construction change (day) keys.

    b. Owner or Owner's Representative will replace temporary construction cores with permanent cores.

2.15 KEYING

A. Provide a factory registered keying system, complying with guidelines in ANSI/BHMA A156.28, incorporating decisions made at keying conference.

B. Provide cylinders/cores keyed into Owner's existing factory registered keying system, complying with guidelines in ANSI/BHMA A156.28, incorporating decisions made at keying conference.

C. Requirements:

1. Provide permanent cylinders/cores keyed by the manufacturer according to the following key system.

    a. Master Keying system as directed by the Owner.

2. Forward bitting list and keys separately from cylinders, by means as directed by Owner. Failure to comply with forwarding requirements shall be cause for replacement of cylinders/cores involved at no additional cost to Owner.
3. Provide keys with the following features:

    a. Material: Nickel silver; minimum thickness of .107-inch (2.3mm)
    b. Patent Protection: Keys and blanks protected by one or more utility patent(s) until the year, 2029.

4. Identification:

    a. Mark permanent cylinders/cores and keys with applicable blind code per DHI publication "Keying Systems and Nomenclature" for identification. Blind code marks shall not include actual key cuts.
    b. Identification stamping provisions must be approved by the Architect and Owner.
    c. Stamp cylinders/cores and keys with Owner's unique key system facility code as established by the manufacturer; key symbol and embossed or stamped with "DO NOT DUPLICATE" along with the "PATENTED" or patent number to enforce the patent protection.
    d. Failure to comply with stamping requirements shall be cause for replacement of keys involved at no additional cost to Owner.

e. Forward permanent cylinders/cores to Owner, separately from keys, by means as directed by Owner.

5. Quantity: Furnish in the following quantities.

a. Change (Day) Keys: 3 per cylinder/core.
b. Permanent Control Keys: 3.
c. Master Keys: 6.

2.16 KEY CONTROL SYSTEM

A. Manufacturers:

1. Scheduled Manufacturer: Telkee
2. Acceptable Manufacturers: HPC, Lund

B. Requirements:

1. Provide key control system (Lund 1204-250 or equal), including envelopes, labels, tags with self-locking key clips, receipt forms, 3-way visible card index, temporary markers, permanent markers, and standard metal cabinet, all as recommended by system manufacturer, with capacity for 150% of number of locks required for Project.

a. Provide complete cross index system set up by hardware supplier, and place keys on markers and hooks in cabinet as determined by final key schedule.
b. Provide hinged-panel type cabinet for wall mounting.

2.17 DOOR CLOSERS

A. Manufacturers and Products:

1. Scheduled Manufacturer and Product: LCN 4040XP series.
2. Acceptable Manufacturers and Products: No Substitute.

B. Requirements:

1. Provide door closers conforming to ANSI/BHMA A156.4 Grade 1 requirements by BHMA certified independent testing laboratory. ISO 9000 certify closers. Stamp units with date of manufacture code.
2. Provide door closers with fully hydraulic, full rack and pinion action with high strength cast iron cylinder, and full complement bearings at shaft.
3. Cylinder Body: 1-1/2 inch (38 mm) diameter with 3/4 inch (19 mm) diameter double heat-treated pinion journal.
4. Hydraulic Fluid: Fireproof, passing requirements of UL10C, and requiring no seasonal closer adjustment for temperatures ranging from 120 degrees F to -30 degrees F.
5. Spring Power: Continuously adjustable over full range of closer sizes, and providing reduced opening force as required by accessibility codes and standards.
6. Hydraulic Regulation: By tamper-proof, non-critical valves, with separate adjustment for latch speed, general speed, and backcheck.
7. Provide closers with solid forged steel main arms and factory assembled heavy-duty forged forearms for parallel arm closers.
8. Pressure Relief Valve (PRV) Technology: Not permitted.

9. Finish for Closer Cylinders, Arms, Adapter Plates, and Metal Covers: Powder coating finish which has been certified to exceed 100 hours salt spray testing as described in ANSI Standard A156.4 and ASTM B117, or has special rust inhibitor (SRI).
10. Provide special templates, drop plates, mounting brackets, or adapters for arms as required for details, overhead stops, and other door hardware items interfering with closer mounting.

2.18 ELECTRO-MECHANICAL AUTOMATIC OPERATORS

A. Manufacturers and Products:

1. Scheduled Manufacturer and Product: LCN Senior Swing
2. Acceptable Manufacturers and Products: Besam SW200i, Horton 4000LE series

B. Requirements:

1. Provide low energy automatic operator units that are electro-mechanical design complying with ANSI/BHMA A156.19.

    a. Opening: Powered by DC motor working through reduction gears.
    b. Closing: Spring force.
    c. Manual, hydraulic, or chain drive closers: Not permitted.
    d. Operation: Motor is off when door is in closing mode. Door can be manually operated with power on or off without damage to operator. Provide variable adjustments, including opening and closing speed adjustment.
    e. Cover: Aluminum.

2. Provide units with manual off/auto/hold-open switch, push and go function to activate power operator, vestibule interface delay, electric lock delay, hold-open delay adjustable from 2 to 30 seconds, and logic terminal to interface with accessories, mats, and sensors.
3. Provide drop plates, brackets, or adapters for arms as required to suit details.
4. Provide hard-wired motion sensors and/or actuator switches for operation as specified. Provide weather-resistant actuators at exterior applications.
5. Provide key switches, with LED’s, recommended and approved by manufacturer of automatic operator as required for function as described in operation description of hardware sets. Cylinders: Refer to “KEYING” article, herein.
6. Provide complete assemblies of controls, switches, power supplies, relays, and parts/material recommended and approved by manufacturer of automatic operator for each individual leaf. Actuators control both doors simultaneously at pairs. Sequence operation of exterior and vestibule doors with automatic operators to allow ingress or egress through both sets of openings as directed by Architect. Locate actuators, key switches, and other controls as directed by Architect.
7. Provide units with inputs for smoke evacuation doors, where specified, which allow doors to power open upon fire alarm activation and hold open indefinitely or until fire alarm is reset, presence detector input, which prevents closed door from opening or door that is fully opened from closing, hold open toggle input, which allows remote activation for indefinite hold open and close second time input is activated, vestibule inputs, which allow sequencing operation of two units, and SPDT relay for interfacing with latching or locking devices.

2.19 DOOR TRIM

A. Manufacturers:

1. Scheduled Manufacturer: Ives
2. Acceptable Manufacturers: Rockwood, Trimco

B. Requirements:

1. Provide push plates 4 inches (102 mm) wide by 16 inches (406 mm) high by 0.050 inch (1 mm) thick and beveled 4 edges. Where width of door stile prevents use of 4 inches (102 mm) wide plate, adjust width to fit.
2. Provide push bars of solid bar stock, diameter and length as scheduled. Provide push bars of sufficient length to span from center to center of each stile. Where required, mount back to back with pull.
3. Provide offset pulls of solid bar stock, diameter and length as scheduled. Where required, mount back to back with push bar.
4. Provide flush pulls as scheduled. Where required, provide back-to-back mounted model.
5. Provide pulls of solid bar stock, diameter and length as scheduled. Where required, mount back to back with push bar.
6. Provide pull plates 4 inches (102 mm) wide by 16 inches (406 mm) high by 0.050 inch (1 mm) thick, beveled 4 edges, and prepped for pull. Where width of door stile prevents use of 4 inches (102 mm) wide plate, adjust width to fit.
7. Provide wire pulls of solid bar stock, diameter and length as scheduled.
8. Provide decorative pulls as scheduled. Where required, mount back to back with pull.

2.20 PROTECTION PLATES

A. Manufacturers:

1. Scheduled Manufacturer: Ives
2. Acceptable Manufacturers: Rockwood, Trimco

B. Requirements:

1. Provide kick plates, mop plates, and armor plates minimum of 0.050 inch (1 mm) thick, beveled four edges as scheduled. Furnish with sheet metal or wood screws, finished to match plates.
2. Sizes of plates:

    a. Kick Plates: 10 inches (254 mm) high by 2 inches (51 mm) less width of door on single doors, 1 inch (25 mm) less width of door on pairs
    b. Mop Plates: 4 inches (102 mm) high by 2 inches (51 mm) less width of door on single doors, 1 inch (25 mm) less width of door on pairs
    c. Armor Plates: 36 inches (914 mm) high by 2 inches (51 mm) less width of door on single doors, 1 inch (25 mm) less width of door on pairs

2.21 OVERHEAD STOPS AND OVERHEAD STOP/HOLDERS

A. Manufacturers:

1. Scheduled Manufacturers: Glynn-Johnson
2. Acceptable Manufacturers: Rixson, Sargent

B. Requirements:

1. Provide heavy duty concealed mounted overhead stop or holder as specified for exterior and interior vestibule single acting doors.

2. Provide heavy duty concealed mounted overhead stop or holder as specified for double acting doors.
3. Provide heavy or medium duty and concealed or surface mounted overhead stop or holder for interior doors as specified. Provide medium duty surface mounted overhead stop for interior doors and at any door that swings more than 140 degrees before striking wall, open against equipment, casework, sidelights, and where conditions do not allow wall stop or floor stop presents tripping hazard.
4. Where overhead holders are specified provide friction type at doors without closer and positive type at doors with closer.

2.22 DOOR STOPS AND HOLDERS

A. Manufacturers:

1. Scheduled Manufacturer: Ives
2. Acceptable Manufacturers: Rockwood, Trimco

B. Provide door stops at each door leaf:

1. Provide wall stops wherever possible. Provide convex type where mortise type locks are used and concave type where cylindrical type locks are used.
2. Where a wall stop cannot be used, provide universal floor stops for low or high rise options.
3. Where wall or floor stop cannot be used, provide medium duty surface mounted overhead stop.

2.23 THRESHOLDS, SEALS, DOOR SWEEPS, AUTOMATIC DOOR BOTTOMS, AND GASKETING

A. Manufacturers:

1. Scheduled Manufacturer: Zero International
2. Acceptable Manufacturers: National Guard, Pemko

B. Requirements:

1. Provide thresholds, weather-stripping (including door sweeps, seals, and astragals) and gasketing systems (including smoke, sound, and light) as specified and per architectural details. Match finish of other items.
2. Size of thresholds:

    a. Saddle Thresholds: 1/2 inch (13 mm) high by jamb width by door width
    b. Bumper Seal Thresholds: 1/2 inch (13 mm) high by 5 inches (127 mm) wide by door width

3. Provide door sweeps, seals, astragals, and auto door bottoms only of type where resilient or flexible seal strip is easily replaceable and readily available.

2.24 SILENCERS

A. Manufacturers:

1. Scheduled Manufacturer: Ives
2. Acceptable Manufacturers: Rockwood, Trimco

B. Requirements:

1. Provide "push-in" type silencers for hollow metal or wood frames.
2. Provide one silencer per 30 inches (762 mm) of height on each single frame, and two for each pair frame.
3. Omit where gasketing is specified.

2.25 FINISHES

A. Finish: BHMA 626/652 (US26D) or BHMA 630 (US32D); except:

1. Hinges at Exterior Doors: BHMA 630 (US32D)
2. Continuous Hinges: BHMA 630 (US32D)
3. Continuous Hinges: BHMA 628 (US28)
4. Push Plates, Pulls, and Push Bars: BHMA 630 (US32D)
5. Protection Plates: BHMA 630 (US32D)
6. Overhead Stops and Holders: BHMA 630 (US32D)
7. Door Closers: Powder Coat to Match
8. Wall Stops: BHMA 630 (US32D)
9. Latch Protectors: BHMA 630 (US32D)
10. Weatherstripping: Clear Anodized Aluminum
11. Thresholds: Mill Finish Aluminum

PART 3 - EXECUTION

3.1 EXAMINATION

A. Prior to installation of hardware, examine doors and frames, with Installer present, for compliance with requirements for installation tolerances, labeled fire-rated door assembly construction, wall and floor construction, and other conditions affecting performance.

B. Examine roughing-in for electrical power systems to verify actual locations of wiring connections before electrified door hardware installation.

C. Proceed with installation only after unsatisfactory conditions have been corrected.

3.2 PREPARATION

A. Where on-site modification of doors and frames is required:

1. Carefully remove existing door hardware and components being reused. Clean, protect, tag, and store in accordance with storage and handling requirements specified herein.
2. When modifications are exposed to view, use concealed fasteners, when possible.
3. Prepare hardware locations and reinstall in accordance with installation requirements for new door hardware and with:

a. Steel Doors and Frames: For surface applied door hardware, drill and tap doors and frames according to ANSI/SDI A250.6.
b. Wood Doors: DHI WDHS.5 "Recommended Hardware Reinforcement Locations for Mineral Core Wood Flush Doors."
c. Doors in rated assemblies: NFPA 80 for restrictions on on-site door hardware preparation.

3.3 INSTALLATION

A. Mounting Heights: Mount door hardware units at heights to comply with the following, unless otherwise indicated or required to comply with governing regulations.

1. Standard Steel Doors and Frames: ANSI/SDI A250.8.
2. Custom Steel Doors and Frames: HMMA 831.
3. Wood Doors: DHI WDHS.3, "Recommended Locations for Architectural Hardware for Wood Flush Doors."

B. Install each hardware item in compliance with manufacturer's instructions and recommendations, using only fasteners provided by manufacturer.

C. Do not install surface mounted items until finishes have been completed on substrate. Protect all installed hardware during painting.

D. Set units level, plumb and true to line and location. Adjust and reinforce attachment substrate as necessary for proper installation and operation.

E. Drill and countersink units that are not factory prepared for anchorage fasteners. Space fasteners and anchors according to industry standards.

F. Install operating parts so they move freely and smoothly without binding, sticking, or excessive clearance.

G. Hinges: Install types and in quantities indicated in door hardware schedule but not fewer than quantity recommended by manufacturer for application indicated or one hinge for every 30 inches (750 mm) of door height, whichever is more stringent, unless other equivalent means of support for door, such as spring hinges or pivots, are provided.

H. Lock Cylinders: Install construction cores to secure building and areas during construction period.

1. Replace construction cores with permanent cores as indicated in keying section.

I. Wiring: Coordinate with Division 26, ELECTRICAL sections for:

1. Conduit, junction boxes and wire pulls.
2. Connections to and from power supplies to electrified hardware.
3. Connections to fire/smoke alarm system and smoke evacuation system.
4. Connection of wire to door position switches and wire runs to central room or area, as directed by Architect.
5. Testing and labeling wires with Architect's opening number.

J. Key Control System: Tag keys and place them on markers and hooks in key control system cabinet, as determined by final keying schedule.

K. Door Closers: Mount closers on room side of corridor doors, inside of exterior doors, and stair side of stairway doors from corridors. Closers shall not be visible in corridors, lobbies and other public spaces unless approved by Architect.

L. Closer/Holders: Mount closer/holders on room side of corridor doors, inside of exterior doors, and stair side of stairway doors.

M. Power Supplies: Locate power supplies as indicated or, if not indicated, above accessible ceilings or in equipment room, or alternate location as directed by Architect.

1. Coordination: Coordinate provision with the security systems provider to mitigate excessive or redundant purchase.
2. Configuration: Provide least number of power supplies required to adequately serve doors with electrified door hardware.

N. Thresholds: Set thresholds in full bed of sealant complying with requirements specified in Division 07 Section "Joint Sealants."

O. Stops: Provide floor stops for doors unless wall or other type stops are indicated in door hardware schedule. Do not mount floor stops where they may impede traffic or present tripping hazard.

P. Perimeter Gasketing: Apply to head and jamb, forming seal between door and frame.

Q. Meeting Stile Gasketing: Fasten to meeting stiles, forming seal when doors are closed.

R. Door Bottoms: Apply to bottom of door, forming seal with threshold when door is closed.

3.4 ADJUSTING

A. Initial Adjustment: Adjust and check each operating item of door hardware and each door to ensure proper operation or function of every unit. Replace units that cannot be adjusted to operate as intended. Adjust door control devices to compensate for final operation of heating and ventilating equipment and to comply with referenced accessibility requirements.

1. Door Closers: Adjust sweep period to comply with accessibility requirements and requirements of authorities having jurisdiction.

B. Occupancy Adjustment: Approximately three months after date of Substantial Completion, Installer shall examine and readjust each item of door hardware, including adjusting operating forces, as necessary to ensure function of doors, door hardware, and electrified door hardware.

3.5 CLEANING AND PROTECTION

A. Clean adjacent surfaces soiled by door hardware installation.

B. Clean operating items as necessary to restore proper function and finish.

C. Provide final protection and maintain conditions that ensure door hardware is without damage or deterioration at time of Substantial Completion.

3.6 DEMONSTRATION

A. Provide training for Owner's maintenance personnel to adjust, operate, and maintain door hardware and door hardware finishes. Refer to Division 01 Section "Demonstration and Training."

3.7 DOOR HARDWARE SCHEDULE

A. Locksets, exit devices, and other hardware items are referenced in the following hardware sets for series, type and function. Refer to the above-specifications for special features, options, cylinders/keying, and other requirements.

B. Hardware Sets:

HW SET: 01

QTY		DESCRIPTION	CATALOG NUMBER		FINISH	MFR
1	EA	CONT. HINGE	112XY EPT		628	IVE
1	EA	POWER TRANSFER	EPT10 CON	✓	689	VON
1	EA	ELEC PANIC HARDWARE	RX-QELX-AX-35A-NL-OP-388-CON	✓	626	VON
1	EA	INTERFACE BOX	JB7 OR BY DIV. 28	✓		VON
1	EA	RIM CYLINDER	20-057 ICX		626	SCH
1	EA	FSIC CORE	23-030		626	SCH
1	EA	CYLINDER GUARD RING	K-24		626	KEE
1	EA	90 DEG OFFSET PULL	8190EZHD 10" O		630-316	IVE
1	EA	SURF. AUTO OPERATOR	9542 HL/D MS AS REQ (120/240 VAC)	✓	ANCLR	LCN
2	EA	ACTUATOR, TOUCH	8310-836T	✓	630	LCN
1	EA	FLOOR STOP	FS444		626	IVE
1	EA	DOOR SWEEP	39A		A	ZER
1	EA	THRESHOLD	103A-223 (OR AS REQ'D. PER DETAILS/CONDITIONS)		A	ZER
2	EA	WIRE HARNESS	CON-(LENGTH AS REQUIRED)	✓		SCH
1	EA	DOOR CONTACT	PROVIDED BY ACCESS CONTROL	✓	628	SCE
1	EA	POWER SUPPLY	PS902 900-2RS 900-BBK 120/240 VAC	✓		VON
1	EA	DIAGRAM	PROVIDE FACTORY POINT TO POINT WIRING DIAGRAM			VON

CARD READER AND WIRING BY DIVISION 28.

DOORS NORMALLY LOCKED @ EXTERIOR. PRESENTING CREDENTIAL @ EXTERIOR CARD READER WILL UNLATCH PANIC HARDWARE FOR MANUAL ENTRY AND ACTIVATE WALL ACTUATOR MOMENTARILY FOR USE WITH AUTOMATIC OPENING. FREE EGRESS AT ALL TIMES.

HW SET: 02

QTY		DESCRIPTION	CATALOG NUMBER	FINISH	MFR
1	EA	CONT. HINGE	112XY	628	IVE
1	EA	DEADLOCK	MS1850S	628	ADA
2	EA	MORTISE CYLINDER	20-061 ICX	626	SCH
2	EA	FSIC CORE	23-030	626	SCH
1	EA	CYLINDER GUARD RING	K-24	626	KEE
1	EA	INDICATOR	4089	628	ADA
1	EA	CYLINDER GUARD	MS4043	130	ADA
1	EA	PUSH/PULL BAR	9190EZHD-10"-NO	630-316	IVE
1	EA	SURFACE CLOSER	4040XP SCUSH	689	LCN
1	EA	FLOOR STOP	FS444	626	IVE
1	EA	RAIN DRIP	142AA (OMIT @ OVERHANG)	AA	ZER
1	EA	DOOR SWEEP	39A	A	ZER
1	EA	THRESHOLD	103A-223 (OR AS REQ'D. PER DETAILS/CONDITIONS)	A	ZER

DOOR SEALS PROVIDED BY ALUMINUM FRAME MANUFACTURER.

HW SET: 03

QTY		DESCRIPTION	CATALOG NUMBER		FINISH	MFR
1	EA	CONT. HINGE	112XY TWP CON	↙	628	IVE
1	EA	EU MORTISE LOCK	L9092TEU 17A RX CON 12/24 VDC	↙	630	SCH
1	EA	INTERFACE BOX	JB7 OR BY DIV. 28	↙		VON
1	EA	FSIC CORE	23-030		626	SCH
1	EA	SURFACE CLOSER	4040XP EDA		689	LCN
1	EA	FLOOR STOP	FS444		626	IVE
1	EA	RAIN DRIP	142AA (OMIT @ OVERHANG)		AA	ZER
1	EA	DOOR SWEEP	39A		A	ZER
1	EA	THRESHOLD	103A-223 (OR AS REQ'D. PER DETAILS/CONDITIONS)		A	ZER
2	EA	WIRE HARNESS	CON-(LENGTH AS REQUIRED)	↙		SCH
1	EA	DOOR CONTACT	PROVIDED BY ACCESS CONTROL	↙	628	SCE
1	EA	POWER SUPPLY	PROVIDED BY ACCESS CONTROL	↙	LGR	SCE
1	EA	DIAGRAM	PROVIDE FACTORY POINT TO POINT WIRING DIAGRAM			VON

DOOR SEALS PROVIDED BY ALUMINUM FRAME MANUFACTURER.
CARD READER AND WIRING BY DIVISION 28.

DOOR NORMALLY LOCKED AT OUTSIDE. PRESENTING CREDENTIAL WILL UNLOCK LEVER MOMENTARILY FOR ENTRY. FREE EGRESS AT ALL TIMES.

HW SET: 04

QTY		DESCRIPTION	CATALOG NUMBER		FINISH	MFR
1	EA	CONT. HINGE	112XY TWP CON	✓	628	IVE
1	EA	EU MORTISE LOCK	L9092TEU 17A RX CON 12/24 VDC	✓	630	SCH
1	EA	INTERFACE BOX	JB7 OR BY DIV. 28	✓		VON
1	EA	FSIC CORE	23-030		626	SCH
1	EA	OH STOP	100S		630	GLY
1	EA	SURFACE CLOSER	4040XP ST-1630		689	LCN
1	EA	DOOR SWEEP	39A		A	ZER
1	EA	THRESHOLD	103A-223 (OR AS REQ'D. PER DETAILS/CONDITIONS)		A	ZER
2	EA	WIRE HARNESS	CON-(LENGTH AS REQUIRED)	✓		SCH
1	EA	DOOR CONTACT	PROVIDED BY ACCESS CONTROL	✓	628	SCE
1	EA	POWER SUPPLY	PROVIDED BY ACCESS CONTROL	✓	LGR	SCE
1	EA	DIAGRAM	PROVIDE FACTORY POINT TO POINT WIRING DIAGRAM			VON

DOOR SEALS PROVIDED BY ALUMINUM FRAME MANUFACTURER.
CARD READER AND WIRING BY DIVISION 28.

DOOR NORMALLY LOCKED AT OUTSIDE. PRESENTING CREDENTIAL WILL UNLOCK LEVER MOMENTARILY FOR ENTRY. FREE EGRESS AT ALL TIMES.

HW SET: 05

QTY		DESCRIPTION	CATALOG NUMBER		FINISH	MFR
2	EA	CONT. HINGE	112XY EPT		628	IVE
2	EA	POWER TRANSFER	EPT10 CON	✓	689	VON
1	EA	REMOVABLE MULLION	KR4954 STAB		689	VON
1	EA	ELEC PANIC HARDWARE	RX-QELX-AX-35A-EO-CON	✓	626	VON
1	EA	ELEC PANIC HARDWARE	RX-QELX-AX-35A-NL-OP-388-CON	✓	626	VON
1	EA	INTERFACE BOX	JB7 OR BY DIV. 28	✓		VON
1	EA	RIM CYLINDER	20-057 ICX		626	SCH
1	EA	MORTISE CYLINDER	20-061-ICX (MULLION)		626	SCH
2	EA	FSIC CORE	23-030		626	SCH
1	EA	CYLINDER GUARD RING	K-24		626	KEE
2	EA	90 DEG OFFSET PULL	8190EZHD 10" O		630-316	IVE
1	EA	SURF. AUTO OPERATOR	9553/9563 SERIES (VERIFY)	✓	ANCLR	LCN
1	EA	BOLLARD W/CARD READER	SQ-11 X I36-3 (OR SIMILAR) OUTSIDE	✓	AL	WIK
1	EA	ACTUATOR, TOUCH	8310-836T	✓	630	LCN
1	EA	FLOOR STOP	FS444		626	IVE
1	EA	RAIN DRIP	142AA (OMIT @ OVERHANG)		AA	ZER
1	SET	DOOR SEALS	PROVIDED BY ALUMINUM DOOR/FRAME MFG			B/O
2	EA	DOOR SWEEP	39A		A	ZER
1	EA	THRESHOLD	103A-223 (OR AS REQ'D. PER DETAILS/CONDITIONS)		A	ZER
4	EA	WIRE HARNESS	CON-(LENGTH AS REQUIRED)	✓		SCH
2	EA	DOOR CONTACT	PROVIDED BY ACCESS CONTROL	✓	628	SCE
1	EA	POWER SUPPLY	PS902 900-4RL 900-BBK 120/240 VAC	✓		VON
1	EA	DIAGRAM	PROVIDE FACTORY POINT TO POINT WIRING DIAGRAM			VON

CARD READER AND WIRING BY DIVISION 28.

DOORS NORMALLY LOCKED @ EXTERIOR. PRESENTING CREDENTIAL @ EXTERIOR CARD READER WILL UNLATCH PANIC HARDWARE FOR MANUAL ENTRY AND ACTIVATE WALL ACTUATOR MOMENTARILY FOR USE WITH AUTOMATIC OPENING. FREE EGRESS AT ALL TIMES.

HW SET: 06

QTY		DESCRIPTION	CATALOG NUMBER		FINISH	MFR
5	EA	HINGE	5BB1 4.5 X 4.5		630	IVE
1	EA	ELECTRIC HINGE	5BB1 4.5 X 4.5 CON TW4	↯	630	IVE
1	EA	CONST LATCHING BOLT	FB51P/61P AS REQ'D		630	IVE
1	EA	DUST PROOF STRIKE	DP1/DP2 AS REQ'D		626	IVE
1	EA	EU MORTISE LOCK	L9092TEU 17A RX CON 12/24 VDC	↯	630	SCH
1	EA	INTERFACE BOX	JB7 OR BY DIV. 28	↯		VON
1	EA	FSIC CORE	23-030		626	SCH
2	EA	SURFACE CLOSER	4040XP SCUSH		689	LCN
2	EA	KICK PLATE	8400 10" X 1" LDW B-CS		630	IVE
1	EA	RAIN DRIP	142AA (OMIT @ OVERHANG)		AA	ZER
1	SET	SET SEAL	429AA-S (@ HEAD & JAMBS)		AA	ZER
2	EA	DOOR SWEEP	39A		A	ZER
1	EA	ASTRAGAL	43SP		SP	ZER
1	EA	THRESHOLD	103A-223 (OR AS REQ'D. PER DETAILS/CONDITIONS)		A	ZER
2	EA	WIRE HARNESS	CON-(LENGTH AS REQUIRED)	↯		SCH
2	EA	DOOR CONTACT	PROVIDED BY ACCESS CONTROL	↯	628	SCE
1	EA	POWER SUPPLY	PROVIDED BY ACCESS CONTROL	↯	LGR	SCE
1	EA	DIAGRAM	PROVIDE FACTORY POINT TO POINT WIRING DIAGRAM			VON

CARD READER & WIRING BY DIVISION 28.

DOOR NORMALLY LOCKED AT OUTSIDE. PRESENTING CREDENTIAL WILL UNLOCK LEVER MOMENTARILY FOR ENTRY. FREE EGRESS AT ALL TIMES.

HW SET: 07

QTY		DESCRIPTION	CATALOG NUMBER		FINISH	MFR
4	EA	HW HINGE	5BB1HW 4.5 X 4.5 NRP		630	IVE
1	EA	POWER TRANSFER	EPT10 CON	✓	689	VON
1	EA	ELEC PANIC HARDWARE	RX-QELX-PA-AX-98-L-17-CON	✓	626	VON
1	EA	INTERFACE BOX	JB7 OR BY DIV. 28	✓		VON
1	EA	RIM CYLINDER	20-057 ICX		626	SCH
1	EA	FSIC CORE	23-030		626	SCH
1	EA	SURFACE CLOSER	4040XP SCUSH		689	LCN
1	EA	ARMOR PLATE	8400 36" X 2" LDW B-CS		630	IVE
1	EA	RAIN DRIP	142AA (OMIT @ OVERHANG)		AA	ZER
1	SET	SET SEAL	429AA-S (@ HEAD & JAMBS)		AA	ZER
1	EA	DOOR SWEEP	39A		A	ZER
1	EA	THRESHOLD	103A-223 (OR AS REQ'D. PER DETAILS/CONDITIONS)		A	ZER
2	EA	WIRE HARNESS	CON-(LENGTH AS REQUIRED)	✓		SCH
1	EA	DOOR CONTACT	PROVIDED BY ACCESS CONTROL	✓	628	SCE
1	EA	POWER SUPPLY	PS902 900-2RS 900-BBK 120/240 VAC	✓		VON
1	EA	DIAGRAM	PROVIDE FACTORY POINT TO POINT WIRING DIAGRAM			VON

CARD READER & WIRING BY DIVISION 28.

DOORS NORMALLY LOCKED AT EXTERIOR. PRESENTING CREDENTIAL WILL UNLATCH PANIC MOMENTARILY FOR ENTRY. FREE EGRESS AT ALL TIMES.

HW SET: 08

QTY		DESCRIPTION	CATALOG NUMBER	FINISH	MFR
4	EA	HW HINGE	5BB1HW 4.5 X 4.5 NRP	630	IVE
1	EA	STOREROOM LOCK	L9080T 17A	626	SCH
1	EA	FSIC CORE	23-030	626	SCH
1	EA	SURFACE CLOSER	4040XP SCUSH	689	LCN
1	EA	KICK PLATE	8400 10" X 2" LDW B-CS	630	IVE
1	EA	RAIN DRIP	142AA (OMIT @ OVERHANG)	AA	ZER
1	SET	SET SEAL	429AA-S (@ HEAD & JAMBS)	AA	ZER
1	EA	DOOR SWEEP	39A	A	ZER
1	EA	THRESHOLD	103A-223 (OR AS REQ'D. PER DETAILS/CONDITIONS)	A	ZER

HW SET: 09

QTY		DESCRIPTION	CATALOG NUMBER	FINISH	MFR
3	EA	HW HINGE	5BB1HW 4.5 X 4.5 NRP	630	IVE
1	EA	PANIC HARDWARE	LD-PA-AX-98-L-17	626	VON
1	EA	RIM CYLINDER	20-057 ICX	626	SCH
1	EA	FSIC CORE	23-030	626	SCH
1	EA	SURFACE CLOSER	4040XP SCUSH	689	LCN
1	EA	KICK PLATE	8400 10" X 2" LDW B-CS	630	IVE
1	EA	RAIN DRIP	142AA (OMIT @ OVERHANG)	AA	ZER
1	SET	SET SEAL	429AA-S (@ HEAD & JAMBS)	AA	ZER
1	EA	DOOR SWEEP	39A	A	ZER
1	EA	THRESHOLD	103A-223 (OR AS REQ'D. PER DETAILS/CONDITIONS)	A	ZER

HW SET: 10

QTY		DESCRIPTION	CATALOG NUMBER	FINISH	MFR
		GATE HINGES	PROVIDED BY GATE FABRICATOR		B/O
1	EA	PANIC HARDWARE	PA-AX-98-L-17-WH	630	VON
1	EA	RIM CYLINDER	20-057 ICX	626	SCH
1	EA	FSIC CORE	23-030	626	SCH
1	EA	KICK PLATE	8400 10" B-CS	630	IVE

BALANCE OF HARDWARE PROVIDED BY GATE FABRICATOR.
PROVIDE MOUNTING PLATES AS REQUIRED.

HW SET: 11

QTY		DESCRIPTION	CATALOG NUMBER	FINISH	MFR
6	EA	HINGE	5BB1 4.5 X 4.5 NRP	630	IVE
1	EA	CONST LATCHING BOLT	FB51P/61P AS REQ'D	630	IVE
1	EA	DUST PROOF STRIKE	DP1/DP2 AS REQ'D	626	IVE
1	EA	STOREROOM LOCK	L9080T 17A	626	SCH
1	EA	FSIC CORE	23-030	626	SCH
1	EA	COORDINATOR	COR X FL	628	IVE
2	EA	MOUNTING BRACKET	MB	600	IVE
2	EA	SURFACE CLOSER	4040XP SHCUSH	689	LCN
2	EA	KICK PLATE	8400 10" X 1" LDW B-CS	630	IVE
1	SET	SET SEAL	429AA-S (@ HEAD & JAMBS)	AA	ZER
2	EA	DOOR SWEEP	39A	A	ZER
1	EA	ASTRAGAL	43SP	SP	ZER
1	EA	THRESHOLD	103A-223 (OR AS REQ'D. PER DETAILS/CONDITIONS)	A	ZER

HW SET: 12

QTY		DESCRIPTION	CATALOG NUMBER		FINISH	MFR

ALL HARDWARE PROVIDED BY GATE MANUFACTURER

HW SET: 13

QTY		DESCRIPTION	CATALOG NUMBER		FINISH	MFR
1	EA	CONT. HINGE	112XY EPT		628	IVE
1	EA	POWER TRANSFER	EPT10 CON	✓	689	VON
1	EA	ELEC PANIC HARDWARE	RX-QELX-AX-35A-NL-OP-388-CON	✓	626	VON
1	EA	INTERFACE BOX	JB7 OR BY DIV. 28	✓		VON
1	EA	RIM CYLINDER	20-057 ICX		626	SCH
1	EA	FSIC CORE	23-030		626	SCH
1	EA	90 DEG OFFSET PULL	8190EZHD 10" O		630-316	IVE
1	EA	SURF. AUTO OPERATOR	9542 HL/D MS AS REQ (120/240 VAC)	✓	ANCLR	LCN
2	EA	ACTUATOR, TOUCH	8310-836T	✓	630	LCN
1	EA	FLOOR STOP	FS444		626	IVE
2	EA	WIRE HARNESS	CON-(LENGTH AS REQUIRED)	✓		SCH
1	EA	DOOR CONTACT	PROVIDED BY ACCESS CONTROL	✓	628	SCE
1	EA	POWER SUPPLY	PS902 900-2RS 900-BBK 120/240 VAC	✓		VON
1	EA	DIAGRAM	PROVIDE FACTORY POINT TO POINT WIRING DIAGRAM			VON

CARD READER AND WIRING BY DIVISION 28.

DOORS NORMALLY LOCKED @ OUTSIDE. PRESENTING CREDENTIAL @ OUTSIDE CARD READER WILL UNLATCH PANIC HARDWARE FOR MANUAL ENTRY AND ACTIVATE WALL ACTUATOR MOMENTARILY FOR USE WITH AUTOMATIC OPENING. FREE EGRESS AT ALL TIMES.

HW SET: 14

QTY		DESCRIPTION	CATALOG NUMBER		FINISH	MFR
2	EA	HINGE	5BB1 4.5 X 4.5		626	IVE
1	EA	ELECTRIC HINGE	5BB1 4.5 X 4.5 CON TW4	✓	626	IVE
1	EA	EU MORTISE LOCK	L9092TEU 17A RX CON 12/24 VDC	✓	630	SCH
1	EA	INTERFACE BOX	JB7 OR BY DIV. 28	✓		VON
1	EA	FSIC CORE	23-030		626	SCH
1	EA	SURFACE CLOSER	4040XP		689	LCN
1	EA	FLOOR STOP	FS436/438 AS REQ.D.		626	IVE
2	EA	WIRE HARNESS	CON-(LENGTH AS REQUIRED)	✓		SCH
1	EA	DOOR CONTACT	PROVIDED BY ACCESS CONTROL	✓	628	SCE
1	EA	POWER SUPPLY	PROVIDED BY ACCESS CONTROL	✓	LGR	SCE
1	EA	DIAGRAM	PROVIDE FACTORY POINT TO POINT WIRING DIAGRAM			VON

CARD READER AND WIRING BY DIVISION 28.

DOOR NORMALLY LOCKED AT OUTSIDE. PRESENTING CREDENTIAL WILL UNLOCK LEVER MOMENTARILY FOR ENTRY. FREE EGRESS AT ALL TIMES.

HW SET: 15

QTY		DESCRIPTION	CATALOG NUMBER		FINISH	MFR
2	EA	HINGE	5BB1 4.5 X 4.5		626	IVE
1	EA	ELECTRIC HINGE	5BB1 4.5 X 4.5 CON TW4	✓	626	IVE
1	EA	EU MORTISE LOCK	L9092TEU 17A RX CON 12/24 VDC	✓	630	SCH
1	EA	INTERFACE BOX	JB7 OR BY DIV. 28	✓		VON
1	EA	FSIC CORE	23-030		626	SCH
1	EA	SURFACE CLOSER	4040XP RW/PA		689	LCN
1	EA	FLOOR STOP	FS436/438 AS REQ.D.		626	IVE
2	EA	WIRE HARNESS	CON-(LENGTH AS REQUIRED)	✓		SCH
1	EA	DOOR CONTACT	PROVIDED BY ACCESS CONTROL	✓	628	SCE
1	EA	POWER SUPPLY	PROVIDED BY ACCESS CONTROL	✓	LGR	SCE
1	EA	DIAGRAM	PROVIDE FACTORY POINT TO POINT WIRING DIAGRAM			VON

CARD READER AND WIRING BY DIVISION 28.

DOOR NORMALLY LOCKED AT OUTSIDE. PRESENTING CREDENTIAL WILL UNLOCK LEVER MOMENTARILY FOR ENTRY. FREE EGRESS AT ALL TIMES.

HW SET: 16

QTY		DESCRIPTION	CATALOG NUMBER		FINISH	MFR
2	EA	HINGE	5BB1 4.5 X 4.5		626	IVE
1	EA	ELECTRIC HINGE	5BB1 4.5 X 4.5 CON TW4	✓	626	IVE
1	EA	EU MORTISE LOCK	L9092TEU 17A RX CON 12/24 VDC	✓	630	SCH
1	EA	INTERFACE BOX	JB7 OR BY DIV. 28	✓		VON
1	EA	FSIC CORE	23-030		626	SCH
1	EA	SURFACE CLOSER	4040XP RW/PA		689	LCN
1	EA	FLOOR STOP	FS436/438 AS REQ.D.		626	IVE
2	EA	WIRE HARNESS	CON-(LENGTH AS REQUIRED)	✓		SCH
1	EA	DOOR CONTACT	PROVIDED BY ACCESS CONTROL	✓	628	SCE
1	EA	POWER SUPPLY	PROVIDED BY ACCESS CONTROL	✓	LGR	SCE
1	EA	DIAGRAM	PROVIDE FACTORY POINT TO POINT WIRING DIAGRAM			VON

CARD READER AND WIRING BY DIVISION 28.

DOOR NORMALLY LOCKED AT OUTSIDE. PRESENTING CREDENTIAL WILL UNLOCK LEVER MOMENTARILY FOR ENTRY. FREE EGRESS AT ALL TIMES.

HW SET: 17

QTY		DESCRIPTION	CATALOG NUMBER		FINISH	MFR
2	EA	HINGE	5BB1 4.5 X 4.5		626	IVE
1	EA	ELECTRIC HINGE	5BB1 4.5 X 4.5 CON TW4	✓	626	IVE
1	EA	EU MORTISE LOCK	L9092TEU 17A RX CON 12/24 VDC	✓	630	SCH
1	EA	INTERFACE BOX	JB7 OR BY DIV. 28	✓		VON
1	EA	FSIC CORE	23-030		626	SCH
1	EA	SURFACE CLOSER	4040XP		689	LCN
1	EA	KICK PLATE	8400 10" X 2" LDW B-CS		630	IVE
1	EA	WALL STOP	WS406/407CCV AS REQ'D		630	IVE
3	EA	SILENCER	SR64		GRY	IVE
2	EA	WIRE HARNESS	CON-(LENGTH AS REQUIRED)	✓		SCH
1	EA	DOOR CONTACT	PROVIDED BY ACCESS CONTROL	✓	628	SCE
1	EA	POWER SUPPLY	PROVIDED BY ACCESS CONTROL	✓	LGR	SCE
1	EA	DIAGRAM	PROVIDE FACTORY POINT TO POINT WIRING DIAGRAM			VON

CARD READER AND WIRING BY DIVISION 28.

DOOR NORMALLY LOCKED AT OUTSIDE. PRESENTING CREDENTIAL WILL UNLOCK LEVER MOMENTARILY FOR ENTRY. FREE EGRESS AT ALL TIMES.

HW SET: 18

QTY		DESCRIPTION	CATALOG NUMBER		FINISH	MFR

HW SET: 19

QTY		DESCRIPTION	CATALOG NUMBER		FINISH	MFR
3	EA	HINGE	5BB1HW 4.5 X 4.5		652	IVE
1	EA	POWER TRANSFER	EPT10 CON	✓	689	VON
1	EA	ELEC PANIC HARDWARE	RX-QELX-PA-AX-98-L-17-CON	✓	626	VON
1	EA	INTERFACE BOX	JB7 OR BY DIV. 28	✓		VON
1	EA	RIM CYLINDER	20-057 ICX		626	SCH
1	EA	FSIC CORE	23-030		626	SCH
1	EA	SURFACE CLOSER	4040XP RW/PA		689	LCN
1	EA	FLOOR STOP	FS436/438 AS REQ.D.		626	IVE
1	SET	DOOR SEALS	PROVIDED BY ALUMINUM FRAME MFG			B/O
2	EA	WIRE HARNESS	CON-(LENGTH AS REQUIRED)	✓		SCH
1	EA	DOOR CONTACT	PROVIDED BY ACCESS CONTROL	✓	628	SCE
1	EA	POWER SUPPLY	PS902 900-2RS 900-BBK 120/240 VAC	✓		VON
1	EA	DIAGRAM	PROVIDE FACTORY POINT TO POINT WIRING DIAGRAM			VON

CARD READER AND WIRING BY DIVISION 28.

DOORS ELECTRICALLY DOGGED (UNLOCKED) THROUGH THE ACCESS CONTROL SYSTEM DURING NORMAL HOURS. AFTER HOURS DOORS ARE LOCKED (UNDOGGED). COORDINATE WITH ACCESS CONTROL.
AFTER HOURS: PRESENTING CREDENTIAL WILL UNLATCH PANIC MOMENTARILY FOR ENTRY. FREE EGRESS AT ALL TIMES.

HW SET: 20

QTY		DESCRIPTION	CATALOG NUMBER		FINISH	MFR
6	EA	HINGE	5BB1HW 4.5 X 4.5		652	IVE
2	EA	POWER TRANSFER	EPT10 CON	✓	689	VON
1	EA	REMOVABLE MULLION	KR4954 STAB		689	VON
1	EA	ELEC PANIC HARDWARE	RX-PA-AX-98-EO-CON	✓	626	VON
1	EA	ELEC PANIC HARDWARE	RX-QELX-PA-AX-98-L-17-CON	✓	626	VON
1	EA	INTERFACE BOX	JB7 OR BY DIV. 28	✓		VON
1	EA	MULLION STORAGE KIT	MT54		689	VON
1	EA	RIM CYLINDER	20-057 ICX		626	SCH
1	EA	MORTISE CYLINDER	20-061-ICX (MULLION)		626	SCH
2	EA	FSIC CORE	23-030		626	SCH
2	EA	SURFACE CLOSER	4040XP RW/PA		689	LCN
2	EA	FLOOR STOP	FS436/438 AS REQ.D.		626	IVE
1	EA	MULLION SEAL	8780NBK PSA		BK	ZER
1	SET	DOOR SEALS	PROVIDED BY ALUMINUM FRAME MFG			B/O
4	EA	WIRE HARNESS	CON-(LENGTH AS REQUIRED)	✓		SCH
2	EA	DOOR CONTACT	PROVIDED BY ACCESS CONTROL	✓	628	SCE
1	EA	POWER SUPPLY	PS902 900-2RS 900-BBK 120/240 VAC	✓		VON
1	EA	DIAGRAM	PROVIDE FACTORY POINT TO POINT WIRING DIAGRAM			VON

CARD READER AND WIRING BY DIVISION 28.

DOORS ELECTRICALLY DOGGED (UNLOCKED) THROUGH THE ACCESS CONTROL SYSTEM DURING NORMAL HOURS. AFTER HOURS DOORS ARE LOCKED (UNDOGGED). COORDINATE WITH ACCESS CONTROL.
AFTER HOURS: PRESENTING CREDENTIAL WILL UNLATCH PANIC MOMENTARILY FOR ENTRY. FREE EGRESS AT ALL TIMES.

HW SET: 21

QTY		DESCRIPTION	CATALOG NUMBER		FINISH	MFR
6	EA	HINGE	5BB1HW 4.5 X 4.5		652	IVE
2	EA	POWER TRANSFER	EPT10 CON	✓	689	VON
1	EA	REMOVABLE MULLION	KR4954 STAB		689	VON
1	EA	ELEC PANIC HARDWARE	RX-PA-AX-98-EO-CON	✓	626	VON
1	EA	ELEC PANIC HARDWARE	RX-QELX-PA-AX-98-L-17-CON	✓	626	VON
1	EA	INTERFACE BOX	JB7 OR BY DIV. 28	✓		VON
1	EA	MULLION STORAGE KIT	MT54		689	VON
1	EA	RIM CYLINDER	20-057 ICX		626	SCH
1	EA	MORTISE CYLINDER	20-061-ICX (MULLION)		626	SCH
2	EA	FSIC CORE	23-030		626	SCH
1	EA	SURFACE CLOSER	4040XP RW/PA		689	LCN
1	EA	SURFACE CLOSER	4040XP SCUSH		689	LCN
1	EA	FLOOR STOP	FS436/438 AS REQ.D.		626	IVE
1	EA	DOOR SEAL	488SBK PSA (HEAD & JAMBS)		BK	ZER
1	EA	MULLION SEAL	8780NBK PSA		BK	ZER
4	EA	WIRE HARNESS	CON-(LENGTH AS REQUIRED)	✓		SCH
2	EA	DOOR CONTACT	PROVIDED BY ACCESS CONTROL	✓	628	SCE
1	EA	POWER SUPPLY	PS902 900-2RS 900-BBK 120/240 VAC	✓		VON
1	EA	DIAGRAM	PROVIDE FACTORY POINT TO POINT WIRING DIAGRAM			VON

CARD READER AND WIRING BY DIVISION 28.

DOORS ELECTRICALLY DOGGED (UNLOCKED) THROUGH THE ACCESS CONTROL SYSTEM DURING NORMAL HOURS. AFTER HOURS DOORS ARE LOCKED (UNDOGGED). COORDINATE WITH ACCESS CONTROL.
AFTER HOURS: PRESENTING CREDENTIAL WILL UNLATCH PANIC MOMENTARILY FOR ENTRY. FREE EGRESS AT ALL TIMES.

HW SET: 22

QTY		DESCRIPTION	CATALOG NUMBER		FINISH	MFR
5	EA	HINGE	5BB1 4.5 X 4.5		626	IVE
1	EA	ELECTRIC HINGE	5BB1 4.5 X 4.5 CON TW4	✓	626	IVE
1	EA	CONST LATCHING BOLT	FB51P/61P AS REQ'D		630	IVE
1	EA	DUST PROOF STRIKE	DP1/DP2 AS REQ'D		626	IVE
1	EA	EU MORTISE LOCK	L9092TEU 17A RX CON 12/24 VDC	✓	630	SCH
1	EA	INTERFACE BOX	JB7 OR BY DIV. 28	✓		VON
1	EA	FSIC CORE	23-030		626	SCH
2	EA	SURFACE CLOSER	4040XP SHCUSH		689	LCN
2	EA	KICK PLATE	8400 10" X 1" LDW B-CS		630	IVE
1	EA	ASTRAGAL	41AA		AA	ZER
2	EA	SILENCER	SR64		GRY	IVE
2	EA	WIRE HARNESS	CON-(LENGTH AS REQUIRED)	✓		SCH
2	EA	DOOR CONTACT	PROVIDED BY ACCESS CONTROL	✓	628	SCE
1	EA	POWER SUPPLY	PROVIDED BY ACCESS CONTROL	✓	LGR	SCE
1	EA	DIAGRAM	PROVIDE FACTORY POINT TO POINT WIRING DIAGRAM			VON

CARD READER & WIRING BY DIVISION 28.

DOOR NORMALLY LOCKED AT OUTSIDE. PRESENTING CREDENTIAL WILL UNLOCK LEVER MOMENTARILY FOR ENTRY. FREE EGRESS AT ALL TIMES.

HW SET: 23

QTY		DESCRIPTION	CATALOG NUMBER		FINISH	MFR
5	EA	HINGE	5BB1 4.5 X 4.5		626	IVE
1	EA	ELECTRIC HINGE	5BB1 4.5 X 4.5 CON TW4	✓	626	IVE
1	EA	CONST LATCHING BOLT	FB51P/61P AS REQ'D		630	IVE
1	EA	DUST PROOF STRIKE	DP1/DP2 AS REQ'D		626	IVE
1	EA	EU MORTISE LOCK	L9092TEU 17A RX CON 12/24 VDC	✓	630	SCH
1	EA	INTERFACE BOX	JB7 OR BY DIV. 28	✓		VON
1	EA	FSIC CORE	23-030		626	SCH
2	EA	SURFACE CLOSER	4040XP HW/PA		689	LCN
2	EA	KICK PLATE	8400 10" X 1" LDW B-CS		630	IVE
2	EA	WALL STOP	WS406/407CCV AS REQ'D		630	IVE
1	EA	ASTRAGAL	41AA		AA	ZER
2	EA	SILENCER	SR64		GRY	IVE
2	EA	WIRE HARNESS	CON-(LENGTH AS REQUIRED)	✓		SCH
2	EA	DOOR CONTACT	PROVIDED BY ACCESS CONTROL	✓	628	SCE
1	EA	POWER SUPPLY	PROVIDED BY ACCESS CONTROL	✓	LGR	SCE
1	EA	DIAGRAM	PROVIDE FACTORY POINT TO POINT WIRING DIAGRAM			VON

CARD READER & WIRING BY DIVISION 28.

DOOR NORMALLY LOCKED AT OUTSIDE. PRESENTING CREDENTIAL WILL UNLOCK LEVER MOMENTARILY FOR ENTRY. FREE EGRESS AT ALL TIMES.

HW SET: 24

QTY		DESCRIPTION	CATALOG NUMBER	FINISH	MFR
3	EA	HINGE	5BB1 4.5 X 4.5	626	IVE
1	EA	PRIVACY LOCK	L9040 17A 09-544 L283-722	626	SCH
1	EA	SURFACE CLOSER	4040XP	689	LCN
1	EA	KICK PLATE	8400 10" X 2" LDW B-CS	630	IVE
1	EA	MOP PLATE	8400 4" X 1" LDW B-CS	630	IVE
1	EA	WALL STOP	WS406/407CCV AS REQ'D	630	IVE
1	SET	DOOR SEALS	PROVIDED BY ALUMINUM DOOR/FRAME MFG		B/O

HW SET: 25

QTY		DESCRIPTION	CATALOG NUMBER	FINISH	MFR
3	EA	HINGE	5BB1 4.5 X 4.5	626	IVE
1	EA	PRIVACY LOCK	L9040 17A 09-544 L283-722	626	SCH
1	EA	SURFACE CLOSER	4040XP	689	LCN
1	EA	KICK PLATE	8400 10" X 2" LDW B-CS	630	IVE
1	EA	MOP PLATE	8400 4" X 1" LDW B-CS	630	IVE
1	EA	WALL STOP	WS406/407CCV AS REQ'D	630	IVE
1	EA	DOOR SEAL	488SBK PSA (HEAD & JAMBS)	BK	ZER

HW SET: 26

QTY		DESCRIPTION	CATALOG NUMBER	FINISH	MFR
3	EA	HINGE	5BB1 4.5 X 4.5 NRP	630	IVE
1	EA	CLASSROOM DEAD LOCK	L463T XB11-720	626	SCH
1	EA	FSIC CORE	23-030	626	SCH
1	EA	PUSH PLATE	8200 8" X 16"	630	IVE
1	EA	PULL PLATE	8302 10" 4" X 16"	630	IVE
1	EA	SURFACE CLOSER	4040XP	689	LCN
1	EA	KICK PLATE	8400 10" X 2" LDW B-CS	630	IVE
1	EA	MOP PLATE	8400 4" X 1" LDW B-CS	630	IVE
1	EA	WALL STOP	WS406/407CCV AS REQ'D	630	IVE
1	EA	DOOR SEAL	488SBK PSA (HEAD & JAMBS)	BK	ZER

HW SET: 27

QTY		DESCRIPTION	CATALOG NUMBER	FINISH	MFR
3	EA	HINGE	5BB1 4.5 X 4.5	626	IVE
1	EA	CLASSROOM DEAD LOCK	L463T XB11-720	626	SCH
1	EA	FSIC CORE	23-030	626	SCH
1	EA	PUSH PLATE	8200 8" X 16"	630	IVE
1	EA	PULL PLATE	8302 10" 4" X 16"	630	IVE
1	EA	SURFACE CLOSER	4040XP	689	LCN
1	EA	KICK PLATE	8400 10" X 2" LDW B-CS	630	IVE
1	EA	MOP PLATE	8400 4" X 1" LDW B-CS	630	IVE
1	EA	WALL STOP	WS406/407CCV AS REQ'D	630	IVE
1	SET	DOOR SEALS	PROVIDED BY ALUMINUM FRAME MFG		B/O

HW SET: 28

QTY		DESCRIPTION	CATALOG NUMBER	FINISH	MFR
3	EA	HINGE	5BB1 4.5 X 4.5	626	IVE
1	EA	STOREROOM LOCK	L9080T 17A	626	SCH
1	EA	FSIC CORE	23-030	626	SCH
1	EA	SURFACE CLOSER	4040XP SHCUSH	689	LCN
1	EA	KICK PLATE	8400 10" X 2" LDW B-CS	630	IVE

HW SET: 29

QTY		DESCRIPTION	CATALOG NUMBER	FINISH	MFR
3	EA	HINGE	5BB1 4.5 X 4.5	626	IVE
1	EA	STOREROOM LOCK	L9080T 17A	626	SCH
1	EA	FSIC CORE	23-030	626	SCH
1	EA	WALL STOP	WS406/407CCV AS REQ'D	630	IVE
1	EA	DOOR SEAL	488SBK PSA (HEAD & JAMBS)	BK	ZER

HW SET: 30

QTY		DESCRIPTION	CATALOG NUMBER	FINISH	MFR
3	EA	HINGE	5BB1 4.5 X 4.5	626	IVE
1	EA	STOREROOM LOCK	L9080T 17A	626	SCH
1	EA	FSIC CORE	23-030	626	SCH
1	EA	FLOOR STOP	FS436/438 AS REQ.D.	626	IVE
3	EA	SILENCER	SR64	GRY	IVE

HW SET: 31

QTY		DESCRIPTION	CATALOG NUMBER	FINISH	MFR
3	EA	HINGE	5BB1 4.5 X 4.5	626	IVE
1	EA	STOREROOM LOCK	L9080T 17A	626	SCH
1	EA	FSIC CORE	23-030	626	SCH
1	EA	FLOOR STOP	FS436/438 AS REQ.D.	626	IVE

HW SET: 32

QTY		DESCRIPTION	CATALOG NUMBER	FINISH	MFR
3	EA	HINGE	5BB1HW 5 X 4.5	626	IVE
1	EA	STOREROOM LOCK	L9080T 17A	626	SCH
1	EA	FSIC CORE	23-030	626	SCH
1	EA	SURFACE CLOSER	4040XP SCUSH	689	LCN
1	EA	KICK PLATE	8400 10" X 2" LDW B-CS	630	IVE
1	SET	DOOR SEALS	PROVIDED BY ALUMINUM FRAME MFG		B/O
1	EA	DOOR BOTTOM	360AA	AA	ZER
1	EA	THRESHOLD	PER DETAIL	A	ZER

HW SET: 33

QTY		DESCRIPTION	CATALOG NUMBER	FINISH	MFR

ALL HARDWARE PROVIDED BY DOOR MANUFACTURER

HW SET: 34

QTY		DESCRIPTION	CATALOG NUMBER	FINISH	MFR
6	EA	HINGE	5BB1 4.5 X 4.5	626	IVE
1	EA	CONST LATCHING BOLT	FB51P/61P AS REQ'D	630	IVE
1	EA	DUST PROOF STRIKE	DP1/DP2 AS REQ'D	626	IVE
1	EA	STOREROOM LOCK	L9080T 17A	626	SCH
1	EA	FSIC CORE	23-030	626	SCH
2	EA	OH STOP	450S	630	GLY
2	EA	KICK PLATE	8400 10" X 1" LDW B-CS	630	IVE
1	SET	DOOR SEALS	PROVIDED BY ALUMINUM DOOR/FRAME MFG		B/O
1	EA	ASTRAGAL	41AA	AA	ZER

HW SET: 35

QTY		DESCRIPTION	CATALOG NUMBER	FINISH	MFR
6	EA	HINGE	5BB1 4.5 X 4.5	626	IVE
1	EA	CONST LATCHING BOLT	FB51P/61P AS REQ'D	630	IVE
1	EA	DUST PROOF STRIKE	DP1/DP2 AS REQ'D	626	IVE
1	EA	STOREROOM LOCK	L9080T 17A	626	SCH
1	EA	FSIC CORE	23-030	626	SCH
1	EA	COORDINATOR	COR X FL	628	IVE
2	EA	MOUNTING BRACKET	MB	600	IVE
1	EA	SURFACE CLOSER	4040XP RW/PA	689	LCN
1	EA	SURFACE CLOSER	4040XP SCUSH	689	LCN
2	EA	KICK PLATE	8400 10" X 1" LDW B-CS	630	IVE
1	EA	WALL STOP	WS406/407CCV AS REQ'D	630	IVE
1	EA	ASTRAGAL	41AA	AA	ZER

End of Section

SECTION 08 71 15

LOW ENERGY DOOR OPERATORS

PART 1 - GENERAL

1.1 SUMMARY

A. Section Includes: Provide low energy automatic door operators for swinging doors, with accessories as required for complete operational installation; system to open and close door upon receipt of an actuating signal.

B. Related Sections:

1. Section 08 44 10 Glazed Window Wall Assemblies, including standard hardware.
2. Division 26: Final electrical connections.

1.2 REFERENCES

A. ANSI A156.19: Power Assist and Low Energy Power Operated Doors Standard.

1.3 ADMINISTRATIVE REQUIREMENTS

A. Coordination: Coordinate low energy door operators with doors, frames, door hardware, and surrounding construction.

B. Pre-Installation Meeting: Convene not less than one week prior to commencing work of this Section. Require attendance of those directly affecting work of this Section.

1. Review installation procedures and coordination required with related work.

1.4 SUBMITTALS

A. Product Data: Furnish manufacturer's literature and maintenance data.

B. Shop Drawings: Indicate pertinent dimensioning, general construction, materials and finishes, component connections, anchorage methods and locations and hardware; indicate exposed fasteners for specific approval.

1. Templates and Diagrams: Furnish templates, diagrams, and data necessary for proper installation of closers to fabricators of related work and coordinate.

C. Samples: Furnish samples of each exposed finish.

1.5 QUALITY ASSURANCE

A. Installer Qualifications: Firm with minimum five years successful experience installing door operator units like type specified and acceptable to operator manufacturer.

PART 2 - PRODUCTS

2.1 SYSTEMS MANUFACTURERS

A. Horton Automatics/Series 7000.

B. LCN/4600 Series Electrically Powered Auto-Equalizer.

C. Dor-O-Matic, Inc./Senior-Swing Automatic Operation.

D. Substitutions: Refer to Section 01 25 00.

2.2 MATERIALS

A. System Description: Provide low energy automatic door operators for swinging doors, with accessories.

B. Regulatory Requirements: Comply with applicable codes.

1. Power Failure: Doors shall not exceed 50-pounds force to set door in motion and shall not exceed 5 pounds force for pushing or pulling doors open when force applied to latch side of door.

C. Performance Criteria: Provide operators complying with applicable portions of ANSI A156.19, designed for doors of types indicated to receive operators.

D. System Description: Provide low energy automatic door operators for swinging doors, with accessories as required for complete operational installation; system to open and close door upon receipt of an actuating signal.

E. Low Energy Door Operators: Complete operator system including door operator, controls, and attachment system designed for type of doors indicated and complying with requirements of ANSI A156.19 for low energy power operated door operators.

F. Control: As indicated, as selected by Architect from manufacturer's full range of flush wall mounted push-button control units where not otherwise indicated.

1. Provide controls on each side of every door with an operator; number, size, type, and location as indicated and as required by California Building Standards Code to ensure access for persons with disabilities.

2.3 FABRICATION

A. Fabrication: Provide each automatic door operator as complete, shop fabricated unit.

1. Complete the fabrication, assembly, finishing, application of hardware and other work before shipment, to greatest extent possible.

2. Disassemble only to extent necessary of shipment and installation.

B. Complete cutting, fitting, forming, drilling and grinding of metal work prior to cleaning and finishing. Remove arises from cut edges and ease edges and corners to radius of approximately 1/64".

C. Conceal fasteners unless otherwise approved by Architect.

D. Reinforce work as necessary for performance requirements, and for support to structure.

E. Separate dissimilar metals with bituminous paint or preformed separators to prevent corrosion; separate metal surfaces at moving joints with non-metallic separators to prevent "freeze-up" of joints.

F. Finish: Match entrance door finish as specified in Section 08 44 10 Glazed Window Wall Assemblies.

G. Special Features:

1. Safety release clutch for obstructed closing and with checking for both opening and closing cycles.

2. Interlocks: Electrical interlocks which prevent operation of doors when locked or latched.

PART 3 - EXECUTION

3.1 EXAMINATION

A. Examine areas and conditions under which automatic doors are to be installed; do not proceed with work until unsatisfactory conditions have been corrected.

3.2 INSTALLATION

A. Comply with manufacturer's recommendations and installation instructions for installation of low energy door operators.

B. Set plumb, level and true to line, without warp or rack of frames or doors; anchor securely in place.

1. Separate aluminum and other corrodible metal surfaces from sources of corrosion or electrolytic action at points of contact with other materials.

C. Install complete door operator system including controls, control wiring and power units.

3.3 ADJUSTING

A. After operation of completed installation equivalent to three days use, readjust door operators and controls for optimum operating condition and safety.

B. Lubricate operating equipment.

END OF SECTION

SECTION 08 80 00

GLAZING

PART 1 - GENERAL

1.1 SUMMARY

A. Section Includes:

1. Provide miscellaneous glass and glazing not provided elsewhere including accessories as required for complete installation.

a. Provide glazing for metal doors and frames.
b. Provide glazing for interior aluminum frames.
c. Provide glazing for metal railings.
d. Provide polycarbonate mirrors.

B. Related Sections:
1. Section 08 44 10: Glazed window wall assemblies glazing.
2. Section 08 51 10: Aluminum window glazing.
3. Section 08 83 00: Frameless mirrors.
4. Section 10 28 00: Metal framed mirrors.

1.2 REFERENCES

A. Glass Association of North America (GANA): Glazing Manual and Sealant Manual.

1.3 SUBMITTALS

A. Product Data: Furnish for each type of glass and exposed glazing material.

B. Samples: Furnish samples of exposed glazing accessories.

1.4 WARRANTY

A. Extended Correction Period: Extend correction period to two years for following.

1. Replacing laminated glass which exhibits signs of delaminating.

2. Replacing insulated glass which exhibits signs of moisture on sealed glass surfaces.

3. Replacing mirrors which exhibit signs of desilvering or signs of distortion.

PART 2 - PRODUCTS

2.1 MATERIALS

A. System Description: Section includes miscellaneous glass and glazing materials for items typically furnished without glazing and where glazing is not an integral part of the assembly.

B. Regulatory Requirements:

1. Safety Glass Standard: Comply with applicable codes, CPSC 16 CFR 1201, and pass ANSI Z97.1.

2. Fire Rated Glass: Provide glass identical to glass tested per ASTM E163, labeled and listed by UL or other testing and inspection agency acceptable to applicable authorities.

C. Float Glass: Select glazing quality, clear annealed glass, ASTM C1036; nominal thickness 1/4".

1. Manufacturers:

a. Vitro Architectural Glass (formerly PPG).
b. Oldcastle Glazing.
c. Guardian Industries Corp.
d. Substitutions: Refer to Section 01 25 00.

2. Locations: Provide where indicated as clear glass.

D. Tempered Glass: Select glazing quality, clear float glass, fully tempered, ASTM C1048, Kind FT; nominal thickness 1/4"; safety glass.

1. Manufacturers:

a. Vitro Architectural Glass (formerly PPG).
b. Oldcastle Glazing.
c. Guardian Industries Corp.
d. Substitutions: Refer to Section 01 25 00.

2. Locations: Provide at doors and at window openings where required by applicable codes and federal requirements.

E. Laminated Glass: ASTM C1172, Kind LA, two sheets of select glazing quality clear float glass laminated with polyvinyl butyral film, safety glass; laminated layers shall be free of air pockets and foreign substances.

1. Manufacturers:

a. Vitro Architectural Glass (formerly PPG).
b. Oldcastle Glazing.
c. Guardian Industries Corp.
d. Global Security Glazing.

e. Pulp Studio, Inc.
f. Substitutions: Refer to Section 01 25 00.

2. Glass Thickness: 1/4", unless otherwise indicated.

3. Polyvinyl Butyral Core Thickness: Minimum 30 mil.

4. Location: Provide where indicated.

F. Insulated Glass: Preassembled units consisting of organically sealed panes of glass enclosing a hermetically sealed dehydrated air space with minus 20-degree F dew point.

1. Manufacturers:

a. Vitro Architectural Glass (formerly PPG).
b. Oldcastle Glazing.
c. Guardian Industries Corp. **Basis of Design**
d. Viracon.
e. Substitutions: Refer to Section 01 25 00.

2. Performance: Certified to ASTM E2190 by Insulating Glass Certification Council.

3. System: Manufacturer's standard dual seal system compatible with glazing system, and including spacers, desiccant, and standard corner construction.

4. Glass: ASTM C1036, select glazing quality clear float glass; nominal 1/4” thick glass.

a. Basis of Design IGU: Guardian Glass SunGuard SNX 62/27 on Green

5. Safety Glass: ASTM C1048, Kind FT, fully tempered select glazing quality clear float glass; nominal 1/4” thick glass; provide at doors and impact areas where safety glass is required by applicable codes and regulations.

6. Total Unit Thickness: 1".

7. Locations: Provide at exterior windows and doors unless otherwise indicated.

1. Glazing Materials: Type approved for use in applications indicated for required fire ratings; refer to fire label requirements.

2. Location: Provide at skylights and fire rated not requiring impact resistance.

G. Polycarbonate Mirror:

1. Manufacturers:

a. Bunker Plastics, Inc.
b. Substitutions: Refer to Section 01 25 00.

2. Glazing Materials: Types as recommended by one-way mirror manufacturer.

H. Spacer Shims: Silicone compatible, 50 durometer hardness; 3" long by 3/32" thick by 1/4" high.

I. Setting Blocks: 70-90 durometer hardness; 4” long by 3/8” thick by 1/4” high standard setting blocks.

J. Glazing Sealant: ASTM C920, Type S, Grade NS, elastomeric one-component silicone glazing sealants as recommended by sealant manufacturer for application involved.

1. Manufacturers:

a. Dow Corning Corp.
b. General Electric Co.
c. Pecora Corp.
d. Substitutions: Refer to Section 01 25 00.

2. Structural and Butt Glazing: Provide high-modulus structural silicone glazing materials recommended by sealant manufacturer for applications where sealant bonds glass to metal system and where sealant bonds glass to glass.

3. Color: As selected by Architect from manufacturer's full range of available colors.

K. Glazing Putty: Linseed oil putty, ASTM C570, Type II; oil and resin base caulking compound for building construction; knife grade.1.

1. Manufacturers:

a. DAP, Inc.
b. Substitutions: Refer to Section 01 25 00.

PART 3 - EXECUTION

3.1 PREPARATION

A. Clean glazing channels and framing members to receive glass immediately before glazing; remove coatings not firmly bonded to substrate.

B. Apply primer to joint surfaces where recommended by sealant manufacturer.

3.2 INSTALLATION

A. Comply with GANA Glazing Manual and Sealant Manual and glazing manufacturer recommendations and installation instructions.

1. Do not allow glass to touch metal surfaces.

2. Comply with applicable code requirements and NFPA 80 for glass in fire rated openings.

B. Place setting blocks at quarter points in thin course of sealant.

C. Install removable stops with glass centered in space with spacer shims at 2'-0" intervals on both sides of glass, 1/4" below sightline.

D. Sealant Glazing: Fill gap between glass and stops with sealant to depth equal to bite of frame on glass but not more than 3/8" below sightline.

1. Apply sealant to uniform and level line, flush with sightline; tool or wipe sealant surface for smooth appearance; at exterior locations tool sealant so water is carried away from glass.

3.3 CLEANING

A. At areas subject to potential impact mark glass after installation by crossed streamers attached to framing and held away from glass; do not apply markers to surface of glass.

B. Remove nonpermanent labels immediately after sealant cures; cure sealants for high early strength and durability.

C. Remove and replace glass which is broken, chipped, cracked, abraded or damaged during construction period, including natural causes, accidents and vandalism.

END OF SECTION

SECTION 08 83 00

FRAMELESS MIRRORS

PART 1 - GENERAL

1.1 SUMMARY

A. Section Includes:

1. Typical: Provide frameless glass mirrors with accessories as required for complete installation.

2. Impact Locations: Provide laminated frameless glass mirrors with accessories as required for complete installation.

B. Related Sections:

1. Section 08 80 00: One-way mirrors and polycarbonate mirrors.

1.2 REFERENCES

A. Glass Association of North America (GANA): Glazing Manual and Sealant Manual.

1.3 SUBMITTALS

A. Product Data: Furnish for mirror glass.

B. Samples: Furnish samples of mirror glass with finished edges and corners.

1.4 WARRANTY

A. Special Warranties: Replace mirrors which exhibit signs of desilvering or signs of distortion.

1. Special Warranty Period: Two years.

PART 2 - PRODUCTS

2.1 MATERIALS

A. System Description: Provide frameless mirrors with accessories as required for complete installation.

B. Safety Glass Standard: Comply with applicable codes, CPSC 16 CFR 1201, and pass ANSI Z97.1.

C. Typical Frameless Glass Mirrors: Mirror quality q1 or q2, clear float glass; 1/4" thick; full silver coating, copper coating and organic coating; factory treated and sealed after cutting and finishing.

1. Manufacturers:

a. Guardian Glass.
b. Lenoir Mirror Company, Lenoir, NC.
c. Substitutions: Refer to Section 01 25 00.

2. Edges: Provide edges designed to eliminate cutting potential at edges and corners commonly referred to as arrised edges, as approved by Architect.

D. Laminated Glass Frameless Mirrors: ASTM C1172, Kind LA, two sheets of clear float glass laminated with polyvinyl butyral film, safety glass; laminated layers shall be free of air pockets and foreign substances.

1. Manufacturers:

a. Oldcastle BuildingEnvelope.
b. Guardian Industries Corp.
c. Global Security Glazing.
d. Pulp Studio, Inc.
e. Substitutions: Refer to Section 01 25 00.

2. Glass: Mirror quality q1 or q2, clear float glass; factory treated and sealed after cutting and finishing.

3. Edges: Provide edges designed to eliminate cutting potential at edges and corners commonly referred to as arrised edges, as approved by Architect.

4. Glass Thickness: Nominal 1/4" total thickness unless otherwise indicated.

5. Polyvinyl Butyral Core Thickness: Minimum 30 mil.

6. Reflective Coating: Coating may be standard full silver reflective metallic coating on Number 2 surface or may be mirror reflective surface on polyvinyl butyral core.

E. Mirror Attachment:

1. Bottom Supports: Brite anodized aluminum angles such as Glass Distributors Inc. (301.779.2430)/Brite Anodized Aluminum 3/8” L-Bar Extrusion, provide felt pads for setting mirrors on angles; provide concealed fasteners.

2. Adhesive: Nontoxic type as recommended by mirror manufacturer.

PART 3 - EXECUTION

3.1 INSTALLATION

A. Comply with GANA Glazing Manual and mirror manufacturer instructions.

1. Do not allow glass to touch metal surfaces.

B. Provide ventilation to coating.

C. Set or trim felt to face of mirror.

D. Install ballet barre in accordance with ballet barre manufacturer recommendations and installation instructions without touching mirror.

3.2 CLEANING

A. Remove nonpermanent labels immediately after installation.

B. Remove and replace mirrors which are broken, chipped, cracked, abraded or damaged during construction period, including natural causes, accidents and vandalism.

END OF SECTION

SECTION 08 91 00

LOUVERS

PART 1 - GENERAL

1.1 SUMMARY

A. Section Includes: Provide both extruded aluminum and formed metal (aluminum or galvanized steel) louvers and frames, with screens, attachment hardware, and accessories as required for complete finished installation.

B. Related Sections:

1. Section 08 11 10: Steel door louvers.

1.2 SUBMITTALS

A. Product Data: Furnish manufacturer's literature for each type of louver.

B. Shop Drawings: Indicate profile of frame, details, relation to adjacent construction, flashing, blade configuration, duct work connection, screens, and percentage of free air opening.

C. Samples: Furnish samples of metal finish.

D. Certificates: Where performance requirements are included, provide AMCA Certified Rating Seal indicating louvers comply with requirements.

1.3 SITE CONDITIONS

A. Take site dimensions affecting louvers prior to fabrication.

B. Ensure openings are properly prepared and flashings are correctly located to divert moisture to exterior.

C. Protect adjacent surfaces, finishes and materials from damage during installation of louvers.

PART 2 - PRODUCTS

2.1 MANUFACTURERS

A. The Airolite Corporation.

B. Construction Specialties, Inc. (CSI).

C. Airline Products Co.

D. Nystrom Building Products.

E. Ruskin.

F. Substitutions: Refer to Section 01 25 00.

2.2 MATERIALS

A. System Description: Provide metal louvers and frames, with screens, attachment hardware, and accessories.

B. Performance Criteria: Where indicated, comply with specific performance requirements; unit performance ratings determined in compliance with Air Movement and Control Association (AMCA) Standard 500.

1. Free Area: Minimum 45% based on 48" by 48" louver.

2. Static Pressure Loss: Maximum 0.15" of water gage at airflow of 1000 fpm free air velocity.

3. Water Penetration: Maximum 0.05 oz/sf of free area at intake airflow of 1000 fpm free area velocity.

4. Wind-Driven Rain: Louvers shall achieve a wind-driven rating in conformance with applicable codes and regulations but not less than an A rating on a standard size louver as defined in AMCA 500 - L.

C. Aluminum Extrusions: ASTM B221, 6061 or 6063 alloy, T5 or T6 temper; minimum 0.08" thick.

D. Aluminum Sheet: ASTM B209, manufacturer's standard alloy; minimum 0.08" thick.

E. Steel Sheet: Minimum 16 gage steel, ASTM A924 and A653 with G90 galvanized coating, mill phosphatized.

F. Stainless-Steel Sheet: ASTM A666 Type 304, with No. 4 finish; minimum 18 gage.

2.1 FABRICATION

A. Louvers: Manufacturer's standard fabrication for types specified and configurations indicated on Drawings.

1. Type: Sheet metal louvers formed of shapes as indicated; Contractor option aluminum sheet or galvanized steel sheet unless otherwise indicated.

2. Type: Extruded aluminum wall louvers, continuous blade (mullionless) type.

3. Type: Extruded aluminum wall louvers, fixed blade mullion type.

B. Bird Screen for Exterior Louvers: Minimum 0.063" diameter wire, 1/2" interwoven square mesh.

1. Wire: Stainless-steel.

2. Frame: Match louver.

C. Fabricate louvers to maximum extent possible and disassemble as necessary for shipping and handling limitations; clearly mark units for reassembly and installation.

1. Fabricate frames, including integral sills, to suit adjacent construction with tolerances for installation.

2. Fabricate sill extension, flashings, wall anchors, structural supplementary sub-framing, and accessories as required for complete system; use same materials as provided for louvers.

D. Join frame members and louver blades by welding; maintain equal blade spacing, including separation between blades and frame head and sill; maintain uniform appearance.

1. Shop miter and weld blades into shop fabricated corner units to align with straight sections; include concealed bracing.

E. Shop Finished Louvers: Factory finish with fluoropolymer coating based on Kynar 500 or Hylar 5000 and conforming with AAMA 2605; not less than two coat system.

1. Colors: Where color is not indicated on Drawings or Finish Schedule, provide custom color as directed by Architect including metallic color based on mica.

F. Shop Primed Louvers: Manufacturer's standard thermosetting prime coating compatible with paints specified in Section 09 90 00 - Painting and Coating.

PART 3 - EXECUTION

3.1 INSTALLATION

A. Install louvers in accordance with manufacturer recommendations and installation instruction, properly aligned and level.

B. Secure louver rigid with concealed fasteners of non-corrosive metals to suit materials being encountered and to resist anticipated loads.

C. Coordinate installation method with application of adjacent backing and structural elements, and mechanical work.

D. Set and tie into flashings to ensure diversion of moisture to exterior.

E. Hinge screens for access.

END OF SECTION

SECTION 09 21 00

GYPSUM BOARD ASSEMBLIES

PART 1 - GENERAL

1.1 SUMMARY

A. Section Includes: Provide gypsum board systems including gypsum board, light gage metal framing, suspension system for gypsum board systems, joint treatment, acoustical accessories, and general accessories for complete installation.

1. Provide special surface texture finish coat.

B. Related Sections:

1. Section 05 40 00: Cold-formed structural metal framing, 18-gage and heavier.
2. Section 07 21 00: Building thermal insulation.
3. Section 07 84 00: Firestopping.
4. Section 09 30 00: Cementitious backer unit tile substrates.

1.2 REFERENCES

A. ASTM C754: Installation of Steel Framing Members to Receive Screw-Attached Gypsum Wallboard, Backing Board, or Water-Resistant Backing Board.

B. ASTM C840: Application and Finishing of Gypsum Board.

1.3 ADMINISTRATIVE REQUIREMENTS

A. Design/Build: Provide special engineering for metal framing system to ensure framing heights exceeding manufacturer’s published tables comply with applicable codes and Contract Documents.

B. Coordination, Openings: Obtain dimensions and locations from other trades and provide openings and enclosures for accessories, specialties, equipment, and ductwork.

1.4 SUBMITTALS

A. Product Data: Furnish manufacturer's literature for framing, insulation, gypsum board, and acoustical accessories.

B. Samples: Submit samples of special texture finish.

C. Manufacturer’s Certification: Furnish manufacturer's certification indicating products comply with Contract Documents and applicable codes.

D. Design/Build Certification: Furnish certification by California licensed engineer indicating compliance with Contract Documents and applicable codes.

1. Engineering certification required only where metal framing spans exceed limits included in manufacturer's published tables.

1.5 QUALITY ASSURANCE

A. Sustainability Requirements: Comply with *CAL*Green requirements including those relative to finish material pollution control for adhesives, sealants, and caulks.

B. Level 4 Finish Mock-Up: Provide Level 4 finish mock-up not less than 100 square feet in location acceptable to Architect. Approved mock-up may be incorporated into Project.

C. Level 5 Finish Mock-Up: Provide Level 5 finish mock-up not less than 100 square feet in location acceptable to Architect. Approved mock-up may be incorporated into Project.

D. Special Textured Finish Mock-Up: Provide special texture finish mock-up not less than 100 square feet in location acceptable to Architect. Approved mock-up may be incorporated into Project.

1.6 PROJECT CONDITIONS

A. Do not begin installation of interior gypsum board until space is enclosed, space is not exposed to other sources of water, and space is free of standing water.

B. Maintain areas to receive gypsum board at minimum 50-degree F for 48 hours prior to application and continuously after application until drying of joint compound is complete; comply with ASTM C840.

C. Immediately remove from site gypsum board for interior use exposed to water, including gypsum board with water stains, with signs of mold, and gypsum board with mildew.

PART 2 - PRODUCTS

2.1 SYSTEMS MANUFACTURERS

A. National Gypsum Co.

B. Georgia-Pacific Corp.

C. United States Gypsum Co., USG Corp.

D. Substitutions: Refer to Section 01 25 00.

2.2 MATERIALS

A. System Description: Provide gypsum board assemblies including gypsum board, light gage metal framing, suspension system for gypsum board systems, joint treatment, acoustical accessories, and general accessories.

1. Systems Responsibility: Provide products manufactured by or recommended by manufacturer of gypsum board to maintain single-source responsibility for system.

B. Performance Requirements: Perform gypsum board systems work in accordance with recommendations of ASTM C754 and ASTM C840 unless otherwise specified.

1. Loads: Comply with California Building Code requirements for design of metal framing for gypsum board systems.

a. Deflection: Maximum L/240 typical, L/360 where tile is indicated.

b. Deflection: Maximum L/240 typical, L/360 where tile or plaster are indicated.

2. Large Format Tile: Comply with Tile Council of North America (TCNA) requirements for metal framing at maximum 16” on center and for maximum deflection of L/720 where large format tile as defined by TCNA is indicated.

C. Regulatory Requirements:

1. Fire-Rated Assemblies: Provide systems listed in applicable code or by Underwriter's Laboratory, Gypsum Association (GA) File No's in GA-600 Fire Resistance Design Manual or other listing approved by applicable authorities.

2. Seismic Requirements: Comply with code requirements for seismic bracing.

D. Framing: Comply with ASTM C754, 20-gage and lighter unless otherwise indicated; provide gages as recommended by manufacturer for spans and loads indicated and as required by applicable codes.

1. Studs: ASTM C645, screw-type Cee-shaped.

a. Shaft Walls: Cee-T or Cee-H shaped studs.
b. Area Separation Walls: Match ClarkDietrich/H-Stud, Breakway Clips System.

2. Runners: Match studs.

3. Furring Members: ASTM C645, screw-type, hat-shaped.

a. Sound Rated Assemblies: Provide resilient channels where indicated and where required to provide required sound transmission classifications.

1) Acceptable Manufacturers:

a) USG/RC-1.
b) ClarkDietrich/RC-Deluxe.
c) Substitutions: Refer to Section 01 25 00.

4. Channels: ASTM C754.

5. Hangers: ASTM A641, Class 1 wire not less than sizes in Table No. 5 of ASTM C754 and as required by applicable codes; hanger rods, flat hangers, and angle-type hangers as required.

6. Suspension System: ASTM C635, suspension system composed of main beams and cross furring members interlocking to form supporting network; recommended by gypsum board system manufacturer.

7. Fasteners and Anchorages: As recommended by gypsum board system manufacturer.

E. Gypsum Board: Comply with ASTM C840; maximum permissible lengths; ends square cut, tapered edges on boards to be finished.

1. Mold Resistant Gypsum Board: typical interior.

   a. USG/Sheetrock Mold Tough Firecode Core.
   b. Georgia Pacific/ToughRock Mold-Guard Fireguard X.
   c. National Gypsum/Gold Bond XP Fire-Shield Gypsum Board.
   d. Substitutions: Refer to Section 01 25 00.

2. Tile Substrates: Cementitious backer units specified in Section 09 30 00 - Tiling.

   a. Contractor Option Coated Glass Mat Backer Units: Georgia Pacific/DenShield, UL fire rated as required to maintain integrity of fire rated assemblies.

3. Sheathing: Silicone treated glass mat gypsum sheathing, ASTM C1177, Type X, 5/8” thick unless otherwise indicated.

   a. Manufacturers:

      1) Georgia Pacific/DensGlass Gold.
      2) Substitutions: Refer to Section 01 25 00.

4. Veneer Plaster Base: ASTM C1396, Type X, type recommended by gypsum board manufacturer for gypsum veneer plaster base.

   a. Manufacturers:

      1) National Gypsum/Kal-Kore Veneer Plaster Base.
      2) Georgia Pacific/ToughRock Veneer Plaster Base.
      3) USG/Grand Prix Veneer Plaster Base.

5. Exterior Gypsum Soffit Board: ASTM C931, Type X; as recommended by manufacturer for exterior non-exposed applications.

6. Extended Exposure Gypsum Board: Fire rated Type X gypsum board designed specifically for extended exposure to moisture during construction; ASTM C1177; provide with score of 10 when tested using ASTM D3273 for mold resistance.

   a. National Gypsum/eXP Extended Exposure Sheathing.
   b. Georgia Pacific/DensArmor Plus or DensGlass.

c. USG/Sheetrock Fiberock Aqua Tough Sheathing.
d. Substitutions: Refer to Section 01 25 00.

7. Fiberglass Mat Faced Gypsum Roof Board:

a. USG Securock Glass-Mat Roof Board
b. Georgia-Pacific DensDeck Prime Roof Board
c. Substitutions: Refer to Section 01 25 00.

F. Gypsum Board Accessories: Comply with ASTM C840.

1. Provide protective coated steel corner beads and edge trim; type designed to be concealed in finished construction by tape and joint compound.

2. Corner Beads: Manufacturer's standard metal beads.

3. Edge Trim: “J”, "L", "LK", or "LC" casing beads.

4. Reinforcing Tape, Joint Compound, Adhesive, Water, Fasteners: Types recommended by system manufacturer and conforming to ASTM C475.

a. Typical Joint Compound: Chemical hardening type for bedding and filling, ready-mixed or powder vinyl type for topping.

5. Control Joints: Back to back casing beads.

a. Back control joints with 4 mil thick polyethylene air seal.

6. Reveals: Extruded aluminum special trim pieces in manufacturer's standard or custom shapes to conform to configurations and dimensions indicated.

a. Manufactures:

1) Fry Reglet Corp./Drywall Moldings.
2) Gordon Inc./Final Forms I Drywall Trims.
3) Substitutions: Refer to Section 01 25 00.

G. Acoustical Accessories: Provide as indicated and as required to achieve acoustical ratings indicated.

1. Acoustical Insulation: Preformed mineral fiber, ASTM C665, Type I; friction fit type without integral vapor barrier; as required to meet STC ratings indicated, or of thickness indicated.

2. Acoustical Sealant: ASTM C919, type recommended for use in conjunction with gypsum board. Paintable, non-shrinking and non-cracking where exposed, nondrying, nonskinning, nonstaining, and nonbleeding where concealed.

a. Acoustical Sealant Manufacturers:

1) USG/Sheetrock Acoustical Sealant.
2) Tremco/Acoustical Sealant.
3) Pecora/AC-20.

4) Substitutions: Refer to Division 1.

3. Electrical Box Pads: Provide at outlet, switch and telephone boxes in walls with acoustical insulation.

a. Electrical Box Pad Manufacturers for Non-Fire Rated Partitions:

1) Harry A. Lowry & Associates (800.772.2521)/Lowry's Electrical Box Pads.
2) Tremco Sheet Caulking (650.572.1656).
3) Fire rated partition material manufacturers.
4) Substitutions: Refer to Section 01 25 00.

PART 3 - EXECUTION

3.1 INSTALLATION

A. Metal Framing Erection: Erect metal framing in accordance with ASTM C754 and manufacturer's recommendations.

1. Install members true to lines and levels to provide surface flatness with maximum variation of 1/8" in 10'-0" in any direction.

2. Door Opening Framing: Install double studs at door frame jambs; install runners on each side of opening at frame head height between jamb studs and adjacent studs.

3. Install metal framing backing where required for support of fixtures, cabinets, accessories and hardware.

4. Coordinate installation of bucks, anchors, blocking, electrical and mechanical work which is to be placed in or behind partition framing; allow items to be installed after framing is complete.

B. Ceiling Framing Installation: Erect in accordance with ASTM C754 and manufacturer's recommendations.

1. Coordinate location of hangers with other work; provide trapeze supports and steel bracing as required to support ceiling.

2. Install ceiling furring independent of walls, columns, and above-ceiling work.

3. Space main carrying channels at maximum 48" on center, not more than 6" from perimeter walls.

a. Lap splices minimum 12" and secure together 2" from each end of splice.

4. Place furring channels perpendicular to carrying channels at maximum 24" on center and not more than 2" from perimeter walls.

5. Lap splices minimum 8" and secure together 2" from each end of splice.

6. Reinforce openings in ceiling suspension system which interrupt main carrying channels or furring channels, with lateral channel bracing; extend bracing minimum 24" past each end of openings.

7. Laterally brace entire suspension system.

C. Gypsum Board Installation: Install in accordance with ASTM C840 and manufacturer's recommendations.

1. Use screws when fastening gypsum board to furring and to framing.

2. Erect gypsum board with ends and edges occurring over firm bearing.

   a. Ensure joints of second layer do not occur over joints of first layer in double layer applications.

3. For fire rated systems comply with requirements for fire ratings.

4. Place control joints to be consistent with lines of building spaces and as directed by Architect.

   a. Provide where system abuts structural elements.
   b. Provide at dissimilar materials.
   c. Lengths exceeding 30'-0" in partitions.
   d. Ceiling areas exceeding 50'-0" or 2500 square feet.
   e. Wings of "L", "U" and "T" shaped ceilings.

5. Place corner beads at external corners; use longest practical lengths.

6. Place edge trim where gypsum board abuts dissimilar materials.

7. Tape all edges of above ceiling gypsum board walls

8. Tape, fill, and sand exposed joints, edges, corners and openings to produce surface ready to receive finishes; feather coats onto adjoining surfaces.

9. Finishing: Comply with Gypsum Association (GA) “Levels of Gypsum Board Finish”.

   a. GA Level 4 (Typical): Provide three-coat finishing and sanding is required for surfaces indicated to be painted; provide flush, smooth joints and surfaces ready for applied paint finishes.

   b. Special Texture Finish Coat: Apply special texture coating over surface indicated to be textured in accordance with manufacturer's recommendations; three-coat finishing not required.

10. Remove and replace defective work.

D. Acoustical Accessories Installation:

1. Place acoustical insulation tight within spaces, around cut openings, behind and around electrical and mechanical items within partitions, and tight to items passing through partitions.

2. Place acoustical sealant within partitions in accordance with manufacturer's recommendations; install acoustical sealant at gypsum board perimeter at:

    a. Metal Framing: One or two beads.
    b. Base layer and face layer.
    c. Penetrations of partitions.

3. Tolerance: Maximum 1/4" space between gypsum board at floor, ceiling, and penetrations and sealed with acoustical sealant.

4. Install electrical box pads with pads molded and pressed on back and all sides of box, closing openings, in accordance with manufacturer's instructions, for complete acoustical barrier.

    a. Comply with requirements for HVAC system for air pressure requirements.

END OF SECTION

SECTION 09 24 00

PORTLAND CEMENT PLASTER

PART 1 - GENERAL

1.1 SUMMARY

A. Section Includes:

1. Stucco: Provide three-coat Portland cement plaster (stucco) with rainscreen, metal lath, and accessories as required for complete finished system.

2. Base for Surface Bonded Masonry: Provide two-coat Portland cement plaster base for surface bonded thin set veneer systems with metal lath and accessories as required for complete finished system.

B. Related Sections:
1. Section 07 28 00: Weather barrier underlayment.
2. Section 09 01 20: Plaster patching.
3. Section 09 21 00: Metal studs, 20-gage and lighter.
4. Section 09 90 00: Painting of stucco.

1.2 REFERENCES

A. ASTM C926: Application of Portland Cement Based Plaster.

B. ASTM C1063: Installation of Lathing and Furring for Portland Cement Plaster.

1.3 SUBMITTALS

A. Product Data: Submit manufacturer's product information for each lathing material and accessory, and for plaster materials.

B. Shop Drawings: Indicate locations of control and expansion joints where not shown on Drawings.

C. Samples: Furnish 24” by 24” stucco samples using materials and methods specified including lath.

1.4 QUALITY ASSURANCE

A. Mock-Ups: Provide not less than 100 sf mock-up of each type of plaster; approved mock-ups may be incorporated into Project.

1.5 SITE CONDITIONS

A. Take precautionary measures to ensure plaster is not subjected to excessive sun and wind which could cause uneven and excessive evaporation, premature dehydration, or cracking.

B. Cold-Weather Requirements: Do not apply plaster unless minimum ambient temperature of 40 degrees F has been and continues to be maintained for minimum 48 hours prior to application and until plaster is cured.

PART 2 - PRODUCTS

2.1 MATERIALS

A. System Description: Provide three coat Portland cement plaster (stucco) and two-coat Portland cement plaster base for bonded masonry, with metal lath and accessories.

B. Regulatory Requirements: Comply with applicable codes.

C. Portland Cement Plaster: Provide either ready-mixed materials unless otherwise approved in writing by Architect, complying with ASTM C926.

1. Scratch and Brown Coat Materials:

a. Cement: Normal Type 1 or 1A Portland cement, ASTM C150.
b. Hydrated Lime: Special finishing hydrated lime, Type S, ASTM C206.
c. Aggregate: Natural sand, conforming to ASTM C897 or C144.

2. Brown Coat Water Acrylic Admix: Acrylic polymer specifically manufactured for use in Portland Cement Plaster (Stucco) applications and which will not detrimentally affect finish.

a. Manufacturers:

1) Larsen Products Corp/Acrylic Admix 101.
2) BASF/Thoro Acryl 60.
3) Chem-Masters Corp/Cretelox.
4) Substitutions: Refer to Section 01 25 00.

3. Finishing Materials: Same as brown coat with acrylic admix with integral color and white cement. Factory premix finish coat is acceptable.

a. Provide white cement from a single manufacturer and clear silica sand at applications indicated to have integral color.

b. Integral Color: Pure, non-fading, mineral oxide color conforming to ASTM C979 and designed and mixed to provide uniform color finish coat.

1) Colors: Where color is not indicated on Drawings or Finish Schedule, provide custom color as directed by Architect.

4. Proprietary Finishing Materials: Provide proprietary Portland cement-based factory mixed integral color finishing materials as indicated and as approved by Architect.

a. Manufacturers:

1) La Habra Products, Inc.
2) Merlex Stucco, Inc.
3) Omega Products Corp.: **Basis of Design Akroflex Semi Smooth Finish**

4) Substitutions: Refer to Section 01 25 00.

b. Colors: Where color is not indicated on Drawings or Finish Schedule, provide custom color as directed by Architect.

5. Proprietary Finishing Materials: Provide proprietary acrylic based factory mixed integral color finishing materials as indicated and as approved by Architect.

a. Manufacturers:

1) Dryvit Systems/Textured Acrylic Finish.
2) Omega Products Corp./Akroflex Semi Smooth Finish (Basis of Design)
3) La Habra Products, Inc./DPR Acrylic Finish.
4) Senergy, Inc./Acrylic Finish.
5) Sto Corp./Stolit.
6) Substitutions: Refer to Section 01 25 00.

b. Colors: Where color is not indicated on Drawings or Finish Schedule, provide custom color as directed by Architect.

6. Water: Clean, fresh and free from injurious amounts of oil, acid, alkali, organic matter or other deleterious substances.

7. Bonding Agent: Conform to ASTM C932.

a. Manufacturers:

1) Larsen Products Corp./Weld-Crete.
2) BASF/Thorobond.
3) Chem-Masters Corp./Polyweld.
4) Substitutions: Refer to Section 01 25 00.

B. Metal Components: Comply with requirements of ASTM C1063.

1. Manufacturers:

a. Phillips Manufacturing Company
b. Alabama Metal Industries Corp (AMICO).
c. ClarkDietrich Building Systems.
d. Substitutions: Refer to Section 01 25 00.

2. Exterior Components: Hot-dip galvanized finish; ASTM A924 and A653 minimum G90 for 18 gage and lighter formed metal products, ASTM A123 galvanized after fabrication for 16 gage and heavier products.

a. Exposed Exterior Components: Zinc accessories unless fully concealed in plaster.

3. Suspension System: Size to comply with referenced standards.

    a. Main Runners: Hot or cold-rolled steel.

        1) Main Carrying Channels: Minimum 16 gage, 1-1/2" by 1/2".
        2) Furring Channels: Minimum 16 gage, 3/4" by 1/2".

    b. Hangers: Size and type to suit application and to rigidly secure system in place, with maximum deflection of L/360.

        1) Hanger Wire: ASTM A641, Class 1 galvanized.
        2) Hanger Rods and Flats: Mild steel.

    c. Lateral Bracing: Minimum 16 gage cold-rolled steel.

    d. Anchorage and Fastening: Approved devices of type and size to suit application and to rigidly secure suspension system.

4. Exterior Metal Lath: Galvanized expanded diamond mesh; minimum 2.5 psy at vertical applications, 3.4 psy at horizontal applications.

    a. Backing: Weather resistive barrier system specified in Section 07 28 00 – Weather Barrier/Underlayment.

    b. Self-Furring: Where over solid substrate, provide “V” groove type to hold lath approximately 1/4" from supporting base.

    c. Tie Wire: ASTM A641, soft temper, Class 1 zinc coated; minimum 16 gage for tying metal lath to furring channels and metal lath to metal lath.

5. Inside Corner Mesh: Minimum 26-gage steel; perforated or expanded flanges or clips shaped to permit complete embedding in plaster; minimum 2" by 2" size.

C. Accessories: Provide as indicated, as recommended by referenced standards, and as required for complete installation.

1. Manufacturers:

    a. Keene Products from Metalex, a Division of The Koller Group.
    b. Delta Star, Inc., Superior Metal Trim.
    c. Brand X Metals.
    d. Lath manufacturers.
    e. Substitutions: Refer to Section 01 25 00.

2. Casing Beads and Base Screeds: Minimum 26-gage, square edges at casing beads, drip type base screeds; provide with expanded flanges.

3. Expansion Joints: Two-piece slip type joints; commonly referred to as No. 40.

4. Control Joints: One-piece metal joint designed to interlock with plaster similar to Keene/XJ15-3.

5. Aluminum Vent Strips and Channel Screeds: Extruded aluminum alloy 6063 and temper T5 or T6, minimum 0.05" thick; with manufacturer's standard baked-on finish.

    a. Manufacturers:

        1) Fry Reglet Corp./Plaster Moldings.
        2) Gordon Inc./Final Forms II.
        3) Substitutions: Refer to Section 01 25 00.

    b. Colors: Where color is not indicated on Drawings or Finish Schedule, provide custom color as directed by Architect.

D. Anchorages: Tie wire, nails, screws and other approved metal supports, of type and size to suit application.

    1. Staples not permitted.

2.2 PLASTER MIXES

A. Provide plaster mixes in accordance with ASTM C926 as appropriate to the substrate indicated and the approved samples.

B. Mix only as much plaster as can be used in one hour.

C. Mix materials dry, to uniform color and consistency, before adding water.

D. Protect mixes from frost, dust and evaporation.

E. Do not retemper mixes after initial set has occurred.

PART 3 - EXECUTION

3.1 PREPARATION

A. Coordinate suspended work with structural work to ensure inserts and structural anchorage provisions have been installed to receive hangers.

    1. Coordinate location of hangers with other work.

B. Prior to application ensure mechanical and electrical services behind surfaces to receive cement plaster have been tested and approved.

C. Ensure framing has been properly installed and rigidly secured.

3.2 INSTALLATION

A. Erect furring and lath in accordance with ASTM C1063.

B. Install work true to lines and levels and to provide surface flatness with maximum variation of 1/8" in 10'-0" in any direction.

C. Isolation: Isolate lathing and metal support system where it abuts building structure horizontally, and where partition/wall work abuts overhead structure, to prevent transfer of building loads into plaster.

1. Install slip or cushion type joints to absorb deflections but maintain lateral support.

D. Frame both sides of expansion joints independently unless otherwise indicated, do not bridge joints with furring and lathing or accessories.

E. Fixture Support Framing: Install supplementary framing, blocking and bracing where work is indicated to support fixtures, equipment, services and similar work requiring attachment and support.

F. Coordinate installation of anchors, blocking, electrical and mechanical work which is to be placed in or behind framing; allow such items to be installed after framing is complete.

G. Install expansion and control joints so plaster areas do not exceed 120 ft^2, and with area sides having a maximum one to two and a half (1:2-1/2) ratio, unless otherwise approved by Architect.

H. Suspension System: Install to heights indicated on Drawings.

1. Install independent of walls, columns and overhead work.

2. Use hangers spaced maximum 4'-0" on center.

3. Space main carrying channels maximum 4'-0" on center and not more than 6" from perimeter walls; lap splices minimum 12" and secure together 2" from each end of splice.

4. Securely fix carrying channels to hangers to prevent turning or twisting and to develop full strength of hangers.

5. Place furring channels perpendicular to carrying channels, not more than 2" from perimeter walls; rigidly secure to carrying channels.

6. Lap splices minimum 8" and secure together 1" from each end of splice.

7. Reinforce openings in suspension system which interrupt main carrying channels or furring channels, with lateral channel bracing; extend bracing minimum 24" past openings.

8. Laterally brace suspension system as required to resist seismic loads, including uplift.

I. Metal Lathing: Apply lath taut, with long dimension perpendicular to supports; secure end laps with tie wire where they occur between supports; lap ends minimum 1" and sides 1/2”; secure with tie wires.

1. Continuously reinforce internal angles.

2. Place 6" wide x 12" long strips of metal lath diagonally at corners of openings; secure rigidly in place.

3. Place 6" wide strips of metal lath at junctions of dissimilar materials; place parallel with dissimilar materials; secure rigidly in place.

J. Installation of Metal Accessories:

1. Fasten in place true to line and in correct relation to adjacent materials and as required to prevent dislodging and misalignment by subsequent operations.

2. Fasten at both ends and at maximum 12" on center along sides.

3. Bring grounding edge of accessories to true lines, plumb, level, and straight.

4. Install accessories to provide required depth of plaster and to bring plaster surface to required plane.

5. Install continuous corner reinforcement for full length of external corners.

6. Install sill and drip screeds with paper sheathing and lath installed over attachment flange of screeds.

7. Beads: Use single length of metal beads wherever length of run does not exceed longest standard stock length available; miter or cope corners.

a. Provide casing beads where plaster abuts dissimilar construction and at perimeter of openings where edges of plaster will not be concealed by other work.

K. Portland Cement Plaster: Conform to ASTM C926.

1. Stucco: Apply three coat cement plaster system, scratch, brown, and finish coats.

2. Base for Surface Bonded Masonry: Apply two coat cement plaster system, scratch and brown coats.

3. Apply each base coat (scratch and brown) to minimum thickness of 3/8"; allow each coat to moist cure for minimum period of 48 hours;

a. Moist cure first base coat (scratch coat) during 48-hour period.

4. Allow base coats to cure for minimum 7 days prior to application of finish coat.

5. Evenly dampen base coat, to ensure uniform suction, and apply finish coat; apply thickness sufficient to secure required texture but in no case less than 1/8".

a. Apply pre-mixed finish coat in accordance with manufacturer's recommendations.

6. Maintain surface flatness, with maximum variation of 1/8" in 10'-0".

7. Avoid excessive working of surface, delay troweling to avoid drawing excess fines to surface.

L. Finish: Provide surfaces with finish to match approved sample panel and mock-up.

3.3 CUTTING AND PATCHING

A. Cut, patch, point, and repair plaster as necessary to accommodate other work and to restore cracks, dents, and imperfections.

B. Repair or replace work to eliminate blisters, buckles, crazing, check cracking, dry-outs, efflorescence, sweat-outs, and similar defects.

C. Finish cutting and patching to match undamaged plaster; patching shall not be visible in finished installation.

3.4 CLEANING

A. Promptly remove plaster from surfaces not indicated to be plastered.

B. Repair surfaces stained, marred or otherwise damaged during plastering.

END OF SECTION

SECTION 09 30 00

TILING

PART 1 - GENERAL

1.1 SUMMARY

A. Section Includes: Provide tile installations with accessories, as required for complete installation.

1. Provide waterproofing membrane integral with tile setting beds.
2. Provide cementitious backer unit tile substrate.

B. Related Sections:

1. Section 09 21 00: Metal framing and gypsum board.
2. Section 09 30 90: Exterior large format tiling.

1.2 REFERENCES

A. ANSI A108.1: Installation of Tile with Portland Cement Mortar.

B. ANSI A108.5: Installation of Tile with Latex-Portland Cement Mortar.

C. ANSI A108.6: Installation of Tile with Chemical Resistant Water Cleanable Tile Setting and Grouting Epoxy.

D. ANSI A108.10: Installation of Grout in Tilework.

E. ANSI A108.11: Interior Installation of Cementitious Backer Units.

F. Tile Council of North America (TCNA): Handbook for Ceramic Tile Installation.

1.3 ADMINISTRATIVE REQUIREMENTS

A. Coordination, Large Format Tile and Framing: Tile Council of North America (TCNA) requires framing at large format tile to be maximum 16” on center and for maximum deflection of L/720 where large format tile as defined by TCNA is indicated.

1. Coordinate with framing installation to ensure proper stud spacing and deflection limits are provided at locations where large format tile is indicated.

1.4 SUBMITTALS

A. Product Data: Furnish manufacturer's literature for each type of material for Project.

B. Samples: Furnish each type of tile clearly indicating pattern, coloration and joints.

1. Color Charts: Submit actual tile sections showing full range of colors, textures and patterns available for each type of tile.

2. Prepare two 12" square sample panels of each selected type of tile and grout.

1.5 QUALITY ASSURANCE

A. Sustainability Requirements: Comply with *CAL*Green requirements including those relative to finish material pollution control for adhesives, sealants, and caulks.

1.6 SITE CONDITIONS

A. Provide heat and ventilation in areas where ceramic tile work is being performed, to allow tile to properly set.

B. Take precautionary measures necessary to ensure excessive temperature changes do not occur.

1.7 WARRANTY

A. Extended Correction Period: Provide for correcting failure of system to resist water penetration except where failure is result of structural failure of building. Repair system and pay for or replace damaged materials and surfaces.

1. Hairline cracking due to temperature or shrinkage is not considered structural failure.

2. Period: Two years.

PART 2 - PRODUCTS

2.1 MATERIALS

A. System Description: Provide tile installations with tile, grout, setting materials, and accessories as indicated.

B. Regulatory Requirements, Slip-Resistance:

1. Slip-Resistant Hard Surfaces: Hard surface finishes to comply with requirements of authorities having jurisdiction for slip-resistant hard surfaces, including general code requirements and requirements for access for persons with disabilities.

C. Tile: Types as indicated which could include ceramic, ceramic mosaic, quarry, paver, porcelain, stone, and glass type tiles.

1. Manufacturers:

a. Dal-Tile Corp. Basis of Design
b. Crossville Tile.
c. Summitville Tiles, Inc.
d. Manufacturers listed on Finish Schedule.
e. Substitutions: Refer to Section 01 25 00.

2. Color, Style and Pattern: As indicated on Finish Schedule, as selected by Architect from manufacturer's full range of types of tiles indicated where not otherwise indicated

    a. Colors: Where color is not indicated on Drawings or Finish Schedule, provide custom color as directed by Architect.

3. Base and Trim: Provide matching trim pieces, coordinated with sizes and coursing of adjoining flat tile as directed by Architect; types as indicated, as selected by Architect where not indicated.

D. Portland Cement Setting Bed: Portland cement bed conforming to ANSI A108.1 and TCNA recommendations including separator sheet and reinforcing mesh.

1. Separator sheet may be deleted where over waterproof membrane.

2. Separator sheet may be deleted where over waterproof membrane or shower pan.

E. Latex Thin Set: Thinset bond coat, consisting of latex-cementitious mortar conforming to ANSI A118.4.

1. Manufacturers:

    a. Laticrete International Inc.
    b. Bostik Construction Products/Hydroment.
    c. Custom Building Products.
    d. Mapei Corp.
    e. Parex USA/Mer-Krete.
    f. Substitutions: Refer to Section 01 25 00.

F. Latex-Cement Grout: ANSI A118.7, latex-cementitious type, uniform in color, resistant to shrinkage.

1. Manufacturers:

    a. Laticrete International Inc.
    b. Bostik Construction Products/Hydroment.
    c. Custom Building Products.
    d. Mapei Corp.
    e. Parex USA/Mer-Krete.
    f. Substitutions: Refer to Section 01 25 00.

2. Colors: Where color is not indicated on Drawings or Finish Schedule, provide custom color as directed by Architect.

G. Waterproofing and Crack Isolation Membrane: Manufacturer's standard liquid rubber polymer designed specifically for application under tile in non-immersed applications.

1. Manufacturers:

    a. Laticrete International Inc./9235 Waterproof Membrane.
    b. Bostik Construction Products/Hydroment Ultra-Set.

c. Custom Building Products/RedGard Membrane.
d. Mapei Corp/Mapelastic Aqua Defense.
e. Parex USA/Mer-Krete Hydro-Guard 2000.
f. Substitutions: Refer to Section 01 25 00.

H. Cementitious Backer Units: ANSI A118.9 aggregated Portland cement with woven glass-fiber mesh on both faces; approximately 1/2" thick; UL fire rated as required to maintain integrity of fire rated assemblies.

1. Manufacturers:

a. USG Industries, Durabond Division/Durock.
b. National Gypsum Co./PermaBase Cement Board.
c. Custom Building Products/Wonderboard.
d. Substitutions: Refer to Section 01 25 00.

2. Contractor Option Coated Glass Mat Backer Units: Georgia Pacific/DenShield, UL fire rated as required to maintain integrity of fire rated assemblies.

I. Cleaning and Sealing Materials: As recommended by tile and grout manufacturers, such as Bostik Construction Products/Hydroment CeramaSeal.

J. Floor Sealer (Under Epoxy Set Floors over Concrete): Curing hardener sealer vapor retarder to prevent bond failure of flooring systems, type as recommended by epoxy setting bed material manufacturer for specific applications indicated.

A. Special Tile Trim Pieces: Provide as indicated on Drawings.

1. Manufacturers:

a. Schluter Systems L.P.
b. Substitutions: Refer to Section 01 25 00.

2.2 MIXES

A. Mix and proportion cementitious materials for site-made leveling coats, setting beds and grout as recommended by the TCNA Handbook for Ceramic Tile Installation.

B. Mix and proportion pre-mixed setting beds and grout materials in accordance with manufacturer's recommendations.

PART 3 - EXECUTION

3.1 PREPARATION

A. Prior to installing tile, ensure surfaces are level; comply with TCNA and tile manufacturer recommendations but not greater than following.

1. Bed Set Tile Tolerance: Maximum surface variation of 1/4" in 10'-0".

2. Thin Set Tile Tolerance: Maximum surface variation of 1/8" in 10'-0".

B. Ensure surfaces are clean and well cured.

1. Drains: Where indicated, ensure surfaces are properly sloped to drains.

C. Do not commence work until surface conditions are within tolerances required for proper installation; apply latex leveling material where necessary to meet required tolerances.

D. Waterproof and Crack Isolation Membrane: Install waterproof membrane at tile areas located above grade, in accordance with manufacturer's recommendations; extend membrane minimum 6" up walls.

1. Comply with waterproof membrane manufacturer recommendations for installation of tile over waterproof membrane.

E. Showers: Install shower pan liners and wall waterproofing at showers in accordance with manufacturer's recommendations; extend pan liners minimum 6" up walls, waterproofing full height at showers.

1. Comply with manufacturer recommendations for installation of tile over shower pan liner and waterproof membrane.

F. Backer Units: Install units in accordance with ANSI A108.11, manufacturer's recommendations, and as required to provide fire ratings indicated on Drawings.

G. Floor Sealer: Apply vapor retarding floor sealer on concrete floors indicated to receive epoxy set tile in accordance with manufacturer recommendations and installation instructions.

3.2 INSTALLATION

A. Install tile in accordance with referenced ANSI Standards and TCNA recommendations for type of substrate and indicated setting method.

1. Complexity of TCNA variations in types of tile installation systems and potential for changes to surrounding conditions during design and construction makes exact listing of potential conditions improbable.

2. Contractor, installers, and manufacturer representatives shall inform Architect where actual conditions are not covered and where providing similar materials and systems do not comply with TCNA or manufacturer recommendations.

a. Where specified or similar materials and systems do not comply with TCNA or manufacturer recommendations submit proposed substitutions along with statement substitutions are of comparable quality to specified materials.

B. Following systems shall form the basis of tile installation systems required for Project. Where Project conditions vary from TCNA and manufacturer recommendations, notify Architect immediately. Where different use similar materials and systems as appropriate.

1. Bed Set Floors over Concrete: TCNA F111, with latex cement bond coat.

2. Bed Set Floors over Waterproof and Crack Isolation Membrane over Concrete: TCNA F121, with latex cement bond coat.

3. Bed Set Floors over Waterproof and Crack Isolation Membrane over Wood: TCNA F141, with latex cement bond coat.

4. Latex-Cement Thin Set Floors over Concrete: TCNA F113.

5. Latex-Cement Thin Set Floors over Waterproof and Crack Isolation Membrane: TCNA F122.

6. Latex-Cement Thin Set Wall Tile over Cementitious Backer Units: TCNA W244.

7. Latex-Cement Thin Set Wall Tile over Coated Glass Mat Backer Units: TCNA W245.

8. Showers: TCNA B415 latex bond coat over reinforced mortar bed floor with latex cement thin set over cementitious backer unit walls, with shower pan liners and waterproofing at walls.

C. Place tile in accordance with patterns indicated on Drawings or as directed by Architect; carefully plan tile layouts, ensure pattern is uninterrupted from one surface to the next and through doorways.

1. Apply latex thin set to back of tile where necessary to ensure 100% bond between bond coat and substrate; replace tiles which break due to voids between tile and substrate.

D. Place stone thresholds level and true to line; in correct alignment with tile, doors and partitions.

E. Neatly cut tile around fixtures and drains; accurately form corners, base, intersections and returns.

1. Base, Coves: Flush cove type with base grout joint on wall, cove tile on floor, unless otherwise indicated.

2. Corners and Edges: Bullnose tile unless otherwise indicated.

F. Locate expansion joints, control joints, contraction joints, and isolation joints where indicated; where not indicated, provide as recommended by TCNA Handbook and as approved by Architect.

1. Install special trim pieces as indicated on Drawings and in accordance with manufacturer recommendations and installation instructions, true to lines and levels indicated and in correct relationship with tile and adjacent materials.

G. Ensure tile joints are uniform in width, subject to normal variance in tolerance allowed in tile size; ensure joints are watertight, without voids, cracks, excess mortar or grout.

H. Sound tile after setting, remove and replace hollow sounding units.

I. Allow tile to set for a minimum 48 hours prior to grouting.

J. Grout tile to comply with recommendations of TCNA and as specified.

K. Leave completed installation free of broken, damaged and faulty tile.

3.2 CLEANING AND SEALING

A. Clean tile surfaces free of foreign matter upon completion of grouting.

B. Seal tile and grout surfaces where recommended by manufacturer for materials and applications involved; comply with manufacturer's recommendations.

END OF SECTION

SECTION 09 51 00

ACOUSTICAL CEILINGS

PART 1 - GENERAL

1.1 SUMMARY

A. Section Includes: Provide suspended acoustical ceiling system with exposed suspended metal grid system, trim, and accessories as required for complete finished installation.

B. Related Sections:

1. Section 09 21 00: Gypsum board suspended ceiling systems.
2. Divisions 21 through 28: Facilities services for ceiling penetrations.

1.2 REFERENCES

A. ASTM C635: Metal Suspension Systems for Acoustical Tile and Lay-in Panel Ceilings.

B. ASTM C636: Installation of Metal Ceiling Suspension Systems for Acoustical Tile and Lay-in Panel Ceilings.

C. ASTM E580: Application of Ceiling Suspension Systems for Acoustical Tile and Lay-In Panels in Areas Requiring Seismic Restraint.

1.3 ADMINISTRATIVE REQUIREMENTS

A. Coordination: Coordinate installation of acoustical ceiling systems with items installed above ceilings to ensure work above ceilings is complete, ceiling space allows for concealed items while allowing required ceiling heights, and building is enclosed.

1.4 SUBMITTALS

A. Product Data: Furnish manufacturers' literature.

B. Shop Drawings: Clearly indicate grid layout and related dimensioning, junctions with other work and ceiling finishes, and inter-relation of mechanical and electrical items related to system.

C. Samples: Furnish 3 samples of tile.

1.5 QUALITY ASSURANCE

A. Installer Qualifications: Firm with minimum five years successful experience in projects of similar type and scope; acceptable to manufacturer of integrated acoustical ceiling system.

1.6 SITE CONDITIONS

A. Do not install ceilings until building is enclosed, sufficient heat is provided, dust generating activities have terminated and overhead mechanical work is completed, tested and approved.

1. Do not allow acoustical ceiling units to be exposed to moisture; immediately remove acoustical ceiling units with stains, units with signs of mold, and units with mildew.

B. Allow wet work to dry prior to commencement of installation.

C. Maintain uniform temperatures of minimum 60 degrees F and humidity of 20% to 40% prior to, during and after installation.

PART 2 - PRODUCTS

2.1 SYSTEMS MANUFACTURERS

A. Armstrong World Industries, Inc.

B. CertainTeed.

C. USG Corporation.

D. Substitutions: Refer to Section 01 25 00.

2.2 MATERIALS

A. System Description: Provide acoustical ceiling systems with exposed suspended metal grid system, trim, and accessories as required for complete finished installation.

B. Regulatory Requirements:

1. Seismic Design Requirements: Comply with California Building Code requirements for seismic bracing of ceiling suspension system, and with ASTM E580.

a. Ceiling Struts: Provide struts as detailed on Drawings and as required by code, placed maximum 12'-0" on center in both directions and within 6'-0" of each wall.

b. Slack Wires: Provide safety slack wires, two per fluorescent fixture on diagonally opposite corners and a single wire for each recessed down light.

2. Fire Performance Characteristics: Provide products listed by Underwriters Laboratories (UL) or other independent testing laboratory acceptable to applicable authorities.

a. Flame Spread/Smoke Density: Provide products meeting code requirements for maximum 25 flame spread and maximum 450 smoke developed.

C. Suspension Systems: Comply with ASTM C635, as applicable to type of suspension system required for type of ceiling units indicated.

1. Grid System:

a. Exposed Grid System: Narrow 9/16" nominal face width, direct hung, aluminum or steel "T" exposed grid system.

2. Attachment Devices: Size for 5 times design load indicated in ASTM C635, Table 1, Direct Hung.

3. Hanger Wires: Galvanized carbon steel, ASTM A641, soft temper, pre-stretched, yield-stress load of at least three times design load, but not less than 12-gage.

4. Straps, Tubes and Angles: Provide galvanized steel as required to meet state and local requirements for seismic design loads.

5. Structural Class: Minimum intermediate-duty system.

6. Edge Molding: Manufacturer's standard angle molding for edges and penetrations of ceiling, with single flange of molding exposed.

7. Finish of Exposed Items: Manufacturer's standard white baked enamel.

8. Maximum Allowable Deflection: L/360.

D. Acoustical Panels: ASTM E1264 type and form as indicated on Finish Schedule, as selected by Architect from manufacturer’s full range of panels where not otherwise indicated.

1. Panels: Mineral composition lay-in ceiling panels with reveal edge designed to be compatible with specified suspension system.

2. Texture: Light fissured panels unless otherwise indicated on Drawings.

3. Basis of Design: USG MARS Tile Panels, square edge

4. Size: 2'-0" by 2'-0", except where otherwise indicated on Drawings.

5. Colors: white

PART 3 - EXECUTION

3.1 PREPARATION

A. Furnish layouts for inserts, clips and other supports required to be installed by other trades for support of acoustical ceilings.

1. Install inserts, clips, and supports where not previously installed and where additional supports are required for complete installation.

B. Measure ceiling area and establish layout of acoustical units to balance border widths at opposite edges of each ceiling; do not use less than half width units at borders.

C. Coordinate with other work supported by or penetrating through ceilings, including integral air handling systems, light fixtures, and other systems.

3.2 INSTALLATION

A. Install acoustical ceiling systems in accordance with manufacturer's recommendations and ASTM C636.

1. Coordinate installation of air handling systems and electrical systems integral with integrated acoustic ceiling systems.

2. Finished Ceilings: True to lines and levels and free from warped, soiled or damaged grid or acoustical units.

B. Install ceiling systems in a manner capable of supporting superimposed loads, with maximum permissible deflection of 1/8" in 10'-0".

C. Install after major above-ceiling work is complete; coordinate location of hangers with other work.

1. Ensure suspension system is located to accommodate fittings and units of equipment which is to be placed after installation of ceiling grid.

D. Where ducts or other equipment prevent regular spacing of hangers, reinforce nearest adjacent hangers and related carrying channels as required to span required distance.

E. Install ceiling suspension system to resist seismic loads as required by state and local codes, including extra hanger wires and compression supports for ceilings and light fixtures.

F. Hang system independently of walls, columns, ducts, pipes and conduit. Where suspension system members are spliced, avoid visible displacement of the longitudinal axis or face plane of adjacent members.

G. Do not support lighting fixtures from or on main runners or cross runners if weight of fixture causes total dead load to exceed deflection capability.

1. Support fixture loads independently or provide supplementary hangers located within 6" of each corner.

H. Do not install fixtures so main runners and cross runners are eccentrically loaded; where fixture installation would produce rotation of runners, provide stabilizer bars.

I. Install edge moldings at intersection of ceiling and vertical surfaces, using maximum lengths, straight, true to line and level; miter corners.

1. Provide edge moldings at junctions with other ceiling finishes.

J. Where required form expansion joints to accommodate movement and maintain visual closure without distorting system.

K. Fit acoustic units in place, free from damaged edges or defects detrimental to appearance and function.

1. Lay directionally patterned units one way with pattern as directed.

2. Fit border units neatly against abutting surfaces.

L. Install system level, in uniform plane and free from twist, warp and dents.

M. Install hold-down clips where required by applicable codes and where ceiling is within 20'-0" of an exterior door.

3.3 ADJUSTING

A. Adjustment: Adjust sags or twists which develop in ceiling system and replace any part which is damaged or faulty.

END OF SECTION

SECTION 09 65 10

RESILIENT BASE

PART 1 - GENERAL

1.1 SUMMARY

A. Section Includes: Provide resilient base and accessories as required for complete finished installation.

B. Related Sections:
1. Section 09 65 20: Resilient Plank Flooring

1.2 SUBMITTALS

A. Product Data: Furnish manufacturer's product literature.

B. Samples: Furnish samples of each base color and type.

1.3 QUALITY ASSURANCE

A. Sustainability Requirements: Comply with *CAL*Green requirements including those relative to finish material pollution control for adhesives and resilient flooring.

1.4 SITE CONDITIONS

A. Comply with manufacturer recommendations for site conditions but not less than following; maintain minimum 70-degree F air temperature at installation area for three days prior to, during, and for 24 hours after installation.

B. Store materials in area of application; allow three days for material to reach same temperature as area.

PART 2 - PRODUCTS

2.1 SYSTEMS MANUFACTURERS

A. Johnsonite, Inc.

B. Burke Flooring, Division of Burke Industries.

C. Roppe Rubber Corporation.

D. Flexco Co.

E. Allstate Rubber Corp.

F. Substitutions: Refer to Section 01 25 00.

2.2 MATERIALS

A. System Description: Provide resilient base and accessories as required for complete finished installation.

B. Performance Requirements: Provide materials tested under ASTM E648, Flooring Radiant Panel Test, with results of 0.45 watts/sq. cm or higher.

C. Resilient Base: Conform to ASTM F1861, with premolded end stops and external corners; 1/8" gage; provide coved base at hard floor surfaces.

1. Type: Extruded rubber, in rolls.

2. Type: Vinyl base.

3. Height: 4" unless otherwise indicated.

4. Colors: Where color is not indicated on Drawings or Finish Schedule, provide custom color as directed by Architect.

D. Primers and Adhesives: Water-resistant nontoxic types recommended by base manufacturer for specified material and application.

PART 3 - EXECUTION

3.1 INSTALLATION

A. Apply to walls, columns, pilasters, casework, and other permanent fixtures in rooms and areas where base is required.

1. Fit base joints tight and vertical.

2. Maintain minimum measurement of 18" between joints.

B. Miter internal corners; use molded sections for external corners and exposed ends.

C. Install base on solid backing, adhere tightly to wall and floor surfaces; fill voids along top edge of base with manufacturer's recommended adhesive filler.

D. Scribe and fit to door frames and other obstructions.

E. Install straight and level to variation of plus or minus 1/8" over 10'-0".

3.2 CLEAN-UP

A. Remove excess adhesive from floor, base and wall surfaces without causing damage.

B. Clean surfaces in accordance with manufacturer's recommendations.

END OF SECTION

SECTION 09 65 20

RESILIENT PLANK FLOORING

PART 1 - GENERAL

1.1 SUMMARY

A. Section Includes: Provide resilient tile flooring and accessories as required for complete finished installation.

B. Related Sections:
1. Section 09 65 10: Resilient Base

1.2 SUBMITTALS

A. Product Data: Furnish manufacturer's product literature.

B. Samples: Furnish 3 samples of each type of flooring color and pattern.

1.3 QUALITY ASSURANCE

A. Sustainability Requirements: Comply with *CAL*Green requirements including those relative to finish material pollution control for adhesives and resilient flooring.

1.4 SITE CONDITIONS

A. Ensure floor surfaces are smooth and flat with maximum variation of 1/8" in 10'-0".

B. Ensure concrete floors are dry and exhibit negative alkalinity, carbonizing, and dusting.

C. Maintain minimum 70-degree F air temperature at flooring installation area for three days prior to, during, and for 24 hours after installation.

D. Store flooring materials in area of application; allow three days for material to reach same temperature as area.

PART 2 - PRODUCTS

2.1 SYSTEMS MANUFACTURERS

A. Basis of Design: Millikan Fortified Foundations, PIK176 – 121 Bark

1. Installation per manufacturer’s specifications and written recommendations

Note: Location, extent and pattern installation method as indicated.

B. Substitutions: Refer to Section 01 25 00.

2.2 MATERIALS

A. System Description: Provide resilient plank flooring and accessories.

B. Regulatory Requirements, Flammability: Provide materials tested under ASTM E648, Flooring Radiant Panel Test, with results of 0.45 watts/sq cm or higher.

C. Regulatory Requirements, Slip-Resistance:

1. Slip-Resistant Hard Surfaces: Hard surface finishes to comply with requirements of authorities having jurisdiction for slip-resistant hard surfaces, including general code requirements and requirements for access for persons with disabilities.

2. As indicated in finish schedule.

D. Edge Strips: Homogeneous vinyl or rubber, tapered or bullnose edge, color as selected by Architect.

E. Sub-Floor Filler: White premixed latex-cement paste designed for providing thin solid surface for leveling and minor ramping of subsurface to adjacent floor finishes.

1. Use material capable of being applied and feathered out to adjacent floor without spalling.

F. Primers and Adhesives: Waterproof nontoxic types as recommended by flooring manufacturer for specified material and application.

PART 3 - EXECUTION

3.1 PREPARATION

A. Conform to manufacturer's recommendations for preparation and to ASTM F710.

B. Remove sub-floor ridges and bumps; fill low spots, cracks, joints, holes and defects with sub-floor filler.

C. Clean floor and apply, trowel and float filler to leave smooth, flat hard surface; prohibit traffic until filler is cured.

D. Test substrate for moisture content in accordance with flooring manufacturer recommendations; where moisture content exceeds recommendations take measures recommended by flooring manufacturer.

3.2 INSTALLATION

A. Conform to manufacturer recommendations and installation instructions.

1. Open floor tile cartons, enough to cover each area, and mix tile to ensure shade variations do not occur within any one area.

B. Lay flooring with joints parallel to building lines to produce symmetrical pattern.

C. Install minimum 1/2 plank at room and area perimeter.

D. Terminate resilient flooring at centerline of door openings where adjacent floor finish is dissimilar.

E. Install edge strips at unprotected and exposed edges.

F. Scribe flooring to walls, columns, floor outlets and other appurtenances, to produce tight joints.

G. Consult with Architect for floor pattern desired in each area.

H. Edge Strips: Install where edge of tile would otherwise be exposed; butt to flooring without gaps; set in adhesive.

3.3 CLEAN-UP AND PROTECTION

A. Remove excess adhesive from floor, base and wall surfaces without causing damage.

B. Clean floor surfaces in accordance with manufacturer's recommendations.

C. Prohibit traffic from floor for 48 hours after installation.

END OF SECTION

SECTION 09 65 20

RESILIENT TILE FLOORING

PART 1 - GENERAL

1.1 SUMMARY

A. Section Includes: Provide resilient tile flooring and accessories as required for complete finished installation.

B. Related Sections:

1. Section 09 65 10: Resilient base.

1.2 SUBMITTALS

A. Product Data: Furnish manufacturer's product literature.

B. Samples: Furnish samples of each type of flooring color and pattern.

1.3 QUALITY ASSURANCE

A. Sustainability Requirements: Comply with *CAL*Green requirements including those relative to finish material pollution control for adhesives and resilient flooring.

1.4 SITE CONDITIONS

A. Ensure floor surfaces are smooth and flat with maximum variation of 1/8" in 10'-0".

B. Ensure concrete floors are dry and exhibit negative alkalinity, carbonizing, and dusting.

C. Maintain minimum 70-degree F air temperature at flooring installation area for three days prior to, during, and for 24 hours after installation.

D. Store flooring materials in area of application; allow three days for material to reach same temperature as area.

PART 2 - PRODUCTS

2.1 SYSTEMS MANUFACTURERS

A. Congoleum Corp.

B. Johnsonite

C. Tarkett Inc/Azrock.

D. Armstrong World Industries.

E. Tarkett Inc./Azrock.

F. Flexco Flooring.

G. Burke Mercer.

H. Flexco Flooring.

I. Freudenberg Building Systems, Inc. (NORA).

J. Substitutions: Refer to Section 01 25 00.

2.2 MATERIALS

A. System Description: Provide resilient tile flooring and accessories.

B. Regulatory Requirements, Flammability: Provide materials tested under ASTM E648, Flooring Radiant Panel Test, with results of 0.45 watts/sq cm or higher.

C. Regulatory Requirements, Slip-Resistance:

1. Slip-Resistant Hard Surfaces: Hard surface finishes to comply with requirements of authorities having jurisdiction for slip-resistant hard surfaces, including general code requirements and requirements for access for persons with disabilities.

D. Vinyl Composition Tile (VCT): 12" by 12" by 1/8" thick; vinyl composition tile conforming to ASTM F1066, Composition 1.

1. Colors: Where color is not indicated on Drawings or Finish Schedule, provide custom color as directed by Architect.

E. Vinyl Composition Tile VCT: Static Dissipative: Use at computer room.

F. Edge Strips: Homogeneous vinyl or rubber, tapered or bullnose edge, color as selected by Architect.

G. Sub-Floor Filler: White premixed latex-cement paste designed for providing thin solid surface for leveling and minor ramping of subsurface to adjacent floor finishes.

1. Use material capable of being applied and feathered out to adjacent floor without spalling.

H. Primers and Adhesives: Waterproof nontoxic types as recommended by flooring manufacturer for specified material and application.

I. Sealer and Wax: Type recommended by flooring manufacturer for material type and location.

PART 3 - EXECUTION

3.1 PREPARATION

A. Conform to manufacturer's recommendations for preparation and to ASTM F710.

B. Remove sub-floor ridges and bumps; fill low spots, cracks, joints, holes and defects with sub-floor filler.

C. Clean floor and apply, trowel and float filler to leave smooth, flat hard surface; prohibit traffic until filler is cured.

D. Test substrate for moisture content in accordance with flooring manufacturer recommendations; where moisture content exceeds recommendations take measures recommended by flooring manufacturer.

3.2 INSTALLATION

A. Conform to manufacturer recommendations and installation instructions.

1. Open floor tile cartons, enough to cover each area, and mix tile to ensure shade variations do not occur within any one area.

B. Spread cement evenly in quantity recommended by manufacturer to ensure adhesion over entire area of installation; spread only enough adhesive to permit installation of flooring before initial set.

C. Set flooring in place using methods to ensure full adhesion.

D. Lay flooring with joints parallel to building lines to produce symmetrical pattern.

E. Install minimum 1/2 tile at room and area perimeter.

F. Terminate resilient flooring at centerline of door openings where adjacent floor finish is dissimilar.

G. Install edge strips at unprotected and exposed edges.

H. Scribe flooring to walls, columns, floor outlets and other appurtenances, to produce tight joints.

I. Edge Strips: Install where edge of tile would otherwise be exposed; butt to flooring without gaps; set in adhesive.

3.3 CLEAN-UP AND PROTECTION

A. Remove excess adhesive from floor, base and wall surfaces without causing damage.

B. Clean, seal and wax floor surfaces in accordance with manufacturer's recommendations.

C. Prohibit traffic from floor for 48 hours after installation.

END OF SECTION

SECTION 09 67 55

URETHANE FOOD PREPARATION FLOORING

PART 1 - GENERAL

1.1 SUMMARY

A. Section Includes: Provide urethane slurry flooring, including integral coved base and accessories as required for complete finished installation acceptable by USDA and applicable health authorities for use in food preparation areas.

1.2 ADMINISTRATIVE REQUIREMENTS

A. Pre-Installation Meeting: Convene not less than one week prior to commencing work of this Section. Require attendance of those directly affecting work of this Section.

1. Review installation procedures and coordination required with related work.

1.3 SUBMITTALS

A. Product Data: Furnish manufacturer's literature and maintenance instructions.

B. Samples: Submit membrane applied to 1/4" plywood, or similar backing.

C. Certifications:

1. Project List: List minimum five projects of similar nature installed by applicator.

2. Installer Acceptance: Submit manufacturer's certification installer is acceptable for this Project.

1.4 QUALITY ASSURANCE

A. Sustainability Requirements: Comply with *CAL*Green requirements including those relative to finish material pollution control for coatings.

B. Installer Qualifications: Minimum of five years successful experience in application of flooring systems of type specified and acceptable to manufacturer of flooring system.

C. Supervision: Manufacturer's representative shall supervise installation of system.

1.5 DELIVERY, STORAGE, AND HANDLING

A. Deliver materials in original manufacturer's sealed containers, identified with material name, date of manufacture and lot number.

B. Store materials to prevent damage to containers; immediately remove damaged and unsuitable materials.

1.6 SITE CONDITIONS

A. Slab Temperature: Minimum 40 degrees F at time of installation and at least 5 degrees F above dew point during installation.

PART 2 - PRODUCTS

2.1 SYSTEMS MANUFACTURERS

A. The StonHard Group/StonHard.

B. Sherwin-Williams General Polymers/FasTop.

C. Substitutions: Refer to Section 01 25 00.

2.2 MATERIALS

A. System Description: Provide urethane slurry food preparation flooring, including integral cover base and accessories as required for complete finished installation acceptable by USDA and applicable health authorities for use in food preparation areas.

B. Regulatory Requirements - Volatile Organic Compounds: Provide materials conforming to applicable air quality management district limitations on volatile organic compound (VOC) emissions.

C. Regulatory Requirements - Slip Resistance: Provide non-slip units complying with California Building Code and ADA Standards requirements for slip resistance.

1. Slip-Resistant Hard Surfaces: Hard surface finishes to comply with requirements of authorities having jurisdiction for slip-resistant hard surfaces, including general code requirements and requirements for access for persons with disabilities.

D. Urethane Slurry Flooring: Manufacturer's chemical resistant resin system specified and as recommended by manufacturer for food preparation areas and approved by authorities having jurisdiction for food prep areas.

1. Basis of Design: Sherwin Williams FasTop

a. Specific System: As recommended by system manufacturer for applications indicated; provide special thermal shock resistant and thermal cycling resistance at locations as required by specific food service equipment.

2. Application: Comply with manufacturer recommendations but not less than following:

a. Cove Base: Urethane primer, cover base binder resin, cove base aggregate.
b. Slurry: Binder resin and aggregate.
c. Broadcast: Dry Silica Sand (30 mesh and larger) broadcast into excess.
d. Seal Coat.
e. Thickness: As recommended by manufacturer for application indicated.

3. Colors: provide custom color as indicated.

E. Primer: Manufacturer's recommended primer complying with California limitations on volatile organic compounds as applicable.

F. Subfloor Filler: White premixed latex-cement paste designed for providing thin solid surface for leveling and minor ramping of subsurface to adjacent floor finishes.

1. Use material capable of being applied and feathered out to adjacent floor without spalling.

B. Vapor Retarding Floor Sealer for Concrete Substrates: Type as recommended by decorative epoxy flooring manufacturer.

G. Accessories: Provide as recommended by system manufacturer for applications indicated.

PART 3 - EXECUTION

3.1 EXAMINATION

A. Prior to installing flooring, ensure surfaces are level, with maximum surface variation of 1/4" in 10'-0".

B. Ensure surfaces are clean and well cured.

C. Do not commence work until surface conditions are within tolerances required for proper installation.

D. Start of work indicates acceptance of conditions.

3.2 PREPARATION

A. Clean concrete slab free from foreign matter.

B. Apply vapor retarding floor sealer in accordance with manufacturer recommendations and installation instructions.

3.3 INSTALLATION

A. Comply with manufacturer's recommendations and instructions for application and quantities of materials.

1. Mix and apply flooring materials in accordance with directions, minimum two coat system, two coats plus primer where recommended by manufacturer.

3.4 CLEANING

A. Use clean water and stiff bristle fiber brushes to clean decorative epoxy flooring.

B. Do not use wire brushes, acid type cleaning agents, cleaning compounds with caustic or harsh fillers, or other materials or methods that could damage.

3.5 PROTECTION

A. Protect completed floor surface as required from stains and damage by covering with reinforced construction paper or covering recommended by flooring manufacturer.

B. Protect walls and surfaces of finished work of others against damage or soiling resulting from flooring work.

C. Repair damage caused by flooring work; clean using methods and materials recommended by manufacturers of damaged surfaces; replace materials that cannot be repaired to match adjacent undamaged materials.

END OF SECTION

SECTION 09 68 10

TILE CARPETING

PART 1 - GENERAL

1.1 SUMMARY

A. Section Includes: Provide carpet tile including edge strips where carpeting terminates at other floor finishes and accessories as required for complete finished installation.

B. Related Sections:

1. Section 09 68 00: Broadloom type carpeting.

1.2 SUBMITTALS

A. Product Data: Prior to final acceptance of carpet tile installation, submit manufacturer's detailed maintenance recommendations for care, cleaning and repair of carpet tiles installed.

B. Shop Drawings: Clearly indicate carpet tile layout, direction of carpet tiles, adhesive to be used, method of integrating edge strips with carpet tile, and installation procedures.

C. Samples: Submit samples of each carpet tile type and color, and of each color of edge strip.

D. Certificate of Compliance: Furnish manufacturer's certificate of compliance stating each material delivered conforms to Specifications.

E. Maintenance Recommendations: Prior to final acceptance of carpet tile installation, furnish carpet tile manufacturer's detailed maintenance recommendations for care, cleaning and repair of carpet tiles installed.

F. Maintenance Materials: Submit unused carpet tiles. Box unused carpet tiles and mark boxes indicating color and location installed.

1.3 QUALITY ASSURANCE

A. Sustainability Requirements: Comply with *CAL*Green requirements including those relative to finish material pollution control for carpet systems and adhesives.

B. Installer Qualifications: Firm with minimum five years successful experience in carpet tile installation and approved by carpet tile manufacturer.

1. Upon request, submit letter from carpet manufacturer stating installer is acceptable.

C. Mock-Up: Provide minimum 12' by 12' mock-up of carpet tile for approval prior to beginning installation; approved mock-up may be incorporated into finished installation.

1.4 PROJECT CONDITIONS

A. Do not commence carpet tile installation until painting and finishing work is complete and ceiling and other overhead work has been tested, approved and completed, unless specifically approved.

B. Maintain room temperature at minimum 60 degrees F for at least 24 hours prior to installation; relative humidity shall be approximately that at which area is to be maintained.

C. Schedule, receive, and place carpet tile on floors indicated; protect from soiling and damage during transit, storage, and installation.

1.5 WARRANTY

A. Extended Correction Period: Provide for promptly making good or replacing defective materials or workmanship. Repairs shall take place within ten days of written notification.

1. Period: Two years.

PART 2 - PRODUCTS

2.1 SYSTEMS MANUFACTURERS

A. Collins and Aikman Corp.

B. Bentley Prince Street.

C. Interface Flooring Systems, Inc.

D. Lees Carpets, Division of Burlington, Inc.

E. Shaw Commercial Carpets.

F. Manufacturers listed on Finish Schedule.

G. Substitutions: Refer to Section 01 25 00.

2.2 MATERIALS

A. System Description: Provide carpet tile including edge strips where carpeting terminates at other floor finishes and accessories.

B. Regulatory Requirements: Carpet tiles shall have passed following fire and smoke tests.

1. DOC-FF-1-70: Pass.
2. ASTM E662 (Smoke Denveloped): 450 or less.
3. ASTM E648 or NFPA 253 (Flooring Radiant Panel Test): 0.45 or higher.

C. Design Criteria: Provide carpet materials that bear Carpet and Rug Institute “Green Label Plus”.

D. Performance Requirements, Static: Carpet tile shall develop less than 3.0 kilovolts of static at 70 degrees F and 20 percent relative humidity.

E. Carpet Tile: Types as indicated on Finish Schedule; where carpet tile is not indicated provide as directed by Architect based on following criteria.

1. Yarn: 6.6 or later generation continuous filament soil hiding nylon.

2. Face Weight: Minimum 30 oz. per square yard.

3. Tile Size: As indicated, as selected by Architect from manufacturer's full range of carpet tile sizes where not indicated.

4. Pile Height: Maximum 1/2".

5. Backing: Integrated polyurethane cushion; no latex backing permitted.

6. Antimicrobial Treatment: Provide to inhibit growth of bacteria, mold, and mildew.

7. Soil-Resistant Treatment: Manufacturer's standard integral stain resistance.

8. Colors: Where color is not indicated on Drawings or Finish Schedule, provide custom color as directed by Architect.

F. Adhesive: Nontoxic type recommended by carpet tile manufacturer to suit application and expected service.

G. Leveling and Ramping Material: Latex-cement material designed for providing thin solid surface for leveling and minor ramping of subsurface to adjacent floor finishes.

1. Use material capable of being applied and feathered out to adjacent floor without spalling.

H. Edge Strips: Vinyl or rubber.

1. Colors: Where color is not indicated on Drawings or Finish Schedule, provide custom color as directed by Architect.

I. Accessories: Provide as required for complete finished installation.

PART 3 - EXECUTION

3.1 PREPARATION

A. Clean floors of dust, dirt, solvents, oil, grease, paint, plaster and other substances detrimental to proper performance of adhesive and carpet tile; allow floors to thoroughly dry.

B. Ensure floors are level, with maximum surface variation of 1/4" in 10 feet.

C. Ensure concrete floors are free from scaling and irregularities and exhibit neutrality relative to acidity and alkalinity.

D. Use leveling and ramping material to patch cracks, small holes, leveling and for ramping to provide finished carpet tile within 1/2" of adjacent flooring materials.

E. Test substrate for moisture content in accordance with flooring manufacturer recommendations; where moisture content exceeds recommendations take measures recommended by flooring manufacturer.

3.2 INSTALLATION

A. Install carpet tiles in accordance with manufacturer's recommendations and installation instructions.

1. Adhere tiles to subfloor unless otherwise approved.

B. Prime substrate if required and as recommended by manufacturer. Spread adhesive in quantity recommended by manufacturer to ensure proper adhesion. Apply only enough adhesive to permit proper adhesion of carpet tile before initial set.

C. Lay carpet tile with run of pile in direction of anticipated traffic; do not change run of pile in any one room or from one room to next where continuous through a wall opening.

1. Finished installation to provide monolithic carpet tile appearance as approved by Architect.

D. Cut and fit carpet tile neatly around projections through floor and to walls and other vertical surfaces.

E. Fit carpet tiles snugly to walls or other vertical surfaces, leaving no gaps.

F. Lay installation tight and flat to subfloor well fastened and uniform in appearance; ensure monolithic color, pattern and texture match within any one area.

G. Edging Strips: Install in accordance with manufacturer recommendations and installation instructions.

1. Install edging strips where carpet terminates at other floor coverings.

2. Use full length pieces only, butt tight to vertical surfaces. Where splicing cannot be avoided, butt ends tight and flush.

H. Do not place heavy objects such as furniture on carpet tiled surfaces for not less than 24 hours or until adhesive is set.

3.3 CLEANING

A. Upon completion of carpet tile installation in each area, visually inspect carpet tile installed in that area and immediately remove dirt, soil and foreign substance from exposed face.

B. Clean in accordance with manufacturer's recommendations.

C. Inspect adjacent surfaces and remove marks and stains caused by carpet tile installation.

D. Remove packaging materials, carpet tile scraps, and other debris from carpet tile installation.

END OF SECTION

SECTION 09 90 00

PAINTING AND COATING

PART 1 - GENERAL

1.1 SUMMARY

A. Section Includes: Provide painting and finishing of exposed items and surfaces requiring field painting and finishing including shop primed items.

1. Specified surface preparation, priming and coats of paint are in addition to shop-priming and surface treatment specified under other sections of work.

2. Painting and finishing include field finishing of exterior and interior items not listed as "Surfaces not to be Painted" unless clearly indicated otherwise.

3. Painting and finishing include field finishing of select shop finished items such as mechanical grilles and registers and shop primed items such as access panels and louvers in doors, to match adjacent surfaces.

a. Match adjacent surfaces in color and sheen unless otherwise indicated.

4. Field paint exposed bare and covered pipes, ducts, and hangers, exposed steel and iron work, and primed metal surfaces of equipment installed under mechanical and electrical work in occupied spaces.

B. Surfaces Not to be Painted:

1. Finished items including finished metal surfaces.
2. Walls and ceilings in concealed areas and generally inaccessible areas.
3. Moving parts of operating mechanical and electrical units.
4. Labels: Keep equipment identification and fire rating labels free of paint.
5. Plastic smoke stops and weather-stripping at doors.

C. Related Sections: Shop priming of ferrous metal items is included under various Specification sections.

1. Section 09 96 70: High performance coating for exterior steel.

1.2 SUBMITTALS

A. Product Data: Submit manufacturer's technical information, including paint label analysis and application instructions for each material.

B. Samples: Submit samples for review of color and texture; provide list of material and application for each coat of each finish sample.

1. Brush-Outs: Submit samples of each color and material with texture to simulate actual conditions, on hardboard.

a. Submit 8" by 10" samples of wood finishes on actual wood surfaces; label and identify each as to location and application.

b. Submit samples of concrete masonry (maximum 4" square) defining filler, prime and finish coats.

2. Field Samples: Duplicate painted finishes of approved samples on actual wall surfaces and components for approval prior to commencing work.

a. Size: Minimum 100 sf located where approved.
b. Components: One full component as directed.
c. Simulate finished lighting conditions for review.

C. Manufacturer Certificates: Furnish certificates from each manufacturer stating materials are top quality lines and suitable for intended use on this Project.

1.3 QUALITY ASSURANCE

A. Sustainability Requirements: Comply with *CAL*Green requirements including those relative to finish material pollution control for paints and coatings.

1.4 DELIVERY, STORAGE, AND HANDLING

A. Deliver materials to job site in original, new and unopened packages and containers bearing manufacturer's name and label, with:

1. Name of material, color and sheen.
2. Manufacturer's name, stock number and date of manufacture.
3. Contents by volume, for major pigment and vehicle constituents.
4. Thinning and application instructions.

1.5 SITE CONDITIONS

A. Apply water-base paints when temperature of surfaces and surrounding air are between 50 and 90-degrees F.

B. Do not apply paint in rain, fog or mist; or when relative humidity exceeds 85 percent; or to damp or wet surfaces.

C. Painting may be continued during inclement weather if areas to be painted are enclosed and heated within temperature limits specified.

D. Provide additional temporary ventilation during interior application of paints to eliminate volatile organic compound (VOC) emissions from interior spaces as quickly as possible.

PART 2 - PRODUCTS

2.1 SYSTEMS MANUFACTURERS

A. Benjamin Moore & Co.

B. Sherwin-Williams Co.

C. Pittsburgh Paints, PPG Pittsburgh Paints, including Glidden Professional.

D. Dunn-Edwards Corp.

E. Kelly Moore Paint Co.

F. Vista Paint Co.

G. Substitutions: Refer to Section 01 25 00.

2.2 MATERIALS

A. System Description: Provide painting and finishing of exposed items and surfaces requiring field painting and finishing including shop primed items.

1. Definition: "Painting" and “coating” as used herein means systems including primers, emulsions, enamels, stains, sealers and fillers, whether used as prime, intermediate or finish coats.

B. Regulatory Requirements:

1. Volatile Organic Compound (VOC) Emissions: Furnish materials approved for use by applicable air quality management district for limitations of volatile organic compounds for architectural or special coatings as applicable.

CALIFORNIA REQUIREMENT BELOW, REVISE IF OTHER METHOD USED AT EXIT STAIRS.

2. California Stair Stripes: Paint 2" stripes at stair nosing not otherwise marked, full tread and landing width, in accordance with California Code of Regulations, Title 24, Access Compliance requirements.

a. Exterior Stairs: Provide at landing and each tread in each stair run.
b. Interior Stairs: Provide at landing and last tread at each stair run.

C. Material Quality: Provide top line quality commercial grade (professional painter) paints; materials not bearing manufacturer's identification as their top line product shall not be acceptable.

1. Primers: Provide premium grade primers recommended by paint manufacturer for substrates indicated and for finish systems specified.

2. Undercoats and Barrier Coats: Provide undercoat paints produced by same manufacturer as finish coats; use only thinners approved by paint manufacturer and use only within recommended limits.

3. Finish Coats: Provide finish coats capable of being washed with mild detergent without loss of color, sheen, or pigments.

a. Color pigments: Pure, non-fading, applicable types to suit substrates and service indicated; no lead content permitted.

4. Finish Coat Coordination: Provide finish coats which are compatible with prime paints, undercoats, and barrier coats used.

    a. Review other Specification sections in which prime paints are provided; ensure compatibility of total coatings systems.

    b. Upon request from other trades furnish information on characteristics of finish materials proposed for use.

    c. Provide barrier coats over incompatible primers or remove and prime as required.

    d. Notify Architect in writing of any anticipated problems in use of specified coating systems with substrates primed by others.

D. Colors and Finishes: Prior to commencement of painting work, Architect will furnish color chips for surfaces to be painted.

1. Use of proprietary names in color selection is not intended to imply exclusion of equivalent products of other manufacturers.

2. Final acceptance of colors will be from samples applied on site.

3. Colors: Where color is not indicated on Drawings or Finish Schedule, provide custom color as directed by Architect.

PART 3 - EXECUTION

3.1 PREPARATION

A. Inspection: Examine areas and conditions under which painting work is to be applied.

1. Start of painting work indicates acceptance of surfaces and conditions of surfaces and conditions within any area.

2. Where exposed items or surfaces are not specifically mentioned in Schedules, paint same as adjacent similar materials or areas.

3. Do not paint over dirt, rust, scale, grease, moisture, scuffed surfaces, or conditions detrimental to a durable paint film.

B. Perform preparation and cleaning procedures in accordance with paint manufacturer's instructions and as specified for substrate condition.

1. Existing Painted Finishes:

    a. Clean existing painted surfaces and remove oil, grease, dust, stains, scale, efflorescence, mildew, mold, algae, blisters, and non-adhering paint.

    b. Measure adhesion of existing paints using ASTM D3359 tape test; remove existing coatings where poor adhesion is indicated.

c. Feather edges of severely deteriorated paint where several coats are removed as part of cleaning, to provide smooth transition for new paint.

d. Fill holes, cracks, and defects and fill and sand smooth, ready for new paint finish.

C. Remove hardware, accessories, and items in place and not to be painted, or provide protection prior to surface preparation and painting; after painting reinstall removed items.

D. Clean surfaces before applying paint; remove oil and grease prior to mechanical cleaning; program cleaning so contaminants from cleaning process do not fall onto wet, newly painted surfaces.

E. Cementitious Materials: Prepare by removing efflorescence, chalk, dirt, grease, oils, and by roughening as required to remove glaze.

1. Determine alkalinity and moisture content of surfaces to be painted.

2. If surfaces are found to be sufficiently alkaline to cause blistering and burning of finish paint, neutralize before application of paint.

3. Do not paint over surfaces where moisture content exceeds manufacturer's printed directions.

F. Ferrous Metals: Touch up shop-applied prime coats wherever damaged using same type of primer as applied in shop or barrier coat compatible with finish paint.

1. Bare Surfaces: Clean surfaces that are not galvanized or shop-coated, of oil, dirt, loose mill scale and other foreign substances by solvent or mechanical cleaning.

2. Galvanized Surfaces: Clean free of oil and surface contaminants, using non-petroleum-based solvent; primer and touch-up primer to be zinc-rich primer.

G. Mix painting materials in accordance with manufacturer's directions.

H. Store materials in tightly covered containers; maintain containers used in storage, mixing and application of paint in a clean condition, free of foreign materials and residue.

I. Stir materials before application to produce mixture of uniform density and stir as required during application; do not stir surface film into material, if necessary, strain material before using.

3.2 APPLICATION

A. Apply paint in accordance with manufacturer's directions; use applicators and techniques best suited for substrate and type of material being applied.

1. Apply additional coats when stains or blemishes show through final coat, until paint is a uniform finish, color and appearance.

2. Provide extra attention during application to assure dry film thickness at corners and crevices is equivalent to that of flat surfaces.

3. Paint surfaces behind movable equipment and furniture same as similar exposed surfaces; paint surfaces behind permanently fixed equipment and furniture with prime coat only.

4. Finish doors on tops, bottoms and side edges same as faces.

5. Paint back sides of access panels and removable or hinged covers to match exposed surfaces.

6. Paint interior surfaces of ducts, where visible through registers or grilles, with a flat, non-specular black paint.

7. Sand lightly between coats when recommended by system manufacturer.

B. Scheduling Painting: Apply first coat to surfaces that have been cleaned, pretreated or prepared for painting as soon as practicable after preparation.

1. Allow time between successive coatings to permit proper drying.

2. Do not recoat until paint feels firm and does not deform or feel sticky under moderate thumb pressure.

C. Minimum Coating Thickness: Apply materials at not less than manufacturer's recommended spreading rate, to establish a total dry film thickness as recommended by coating manufacturer.

D. Prime Coats: Apply to items not previously primed; recoat primed and sealed surfaces where there is evidence of suction spots or unsealed areas in first coat.

E. Finish Coats: Provide even texture; leave no laps, irregularity in texture, skid marks, or other surface imperfections.

1. Opaque Finishes: Provide opaque, uniform finish, color and coverage; cloudiness, spotting, holidays, brush marks, runs, sags, ropiness, and other surface imperfections are not acceptable.

2. Transparent and Stained Finishes: Produce glass smooth surface film of even luster; provide with no cloudiness, color irregularity, runs, brush marks, orange peel, nail holes, and other surface imperfections.

F. Completed Work: Match approved samples for color, texture and coverage; remove, refinish or repaint work not accepted.

3.3 PAINTING SCHEDULE

A. Exterior Work: Provide following paint systems and sheens unless otherwise indicated.

1. Metal: Semigloss sheen.

a. 1st Coat: Touch-up primer, prime if none.
b. 2nd and 3rd Coat: Exterior 100% acrylic enamel.

2. Metal: High-performance coating specified in Section 09 96 70.

3. Concrete: Flat sheen.

    a. 1st and 2nd Coat: Exterior acrylic latex emulsion.

4. Concrete, Elastomeric Coating:

    a. Refer to Section 09 96 80 – Elastomeric Coating.

5. Plaster: Flat sheen.

    a. 1st and 2nd Coat: Heavy body vapor permeable waterproof elastomeric acrylic coating.

6. Plaster: Flat sheen.

    a. Refer to Section 09 96 80 – Elastomeric Coating.

7. Concrete Masonry Units: Flat sheen.

    a. 1st Coat: Surface filler.
    b. 2nd and 3rd Coat: Heavy body waterproof acrylic emulsion.
    c. Apply filler at rate to ensure coverage with pores filled.

8. Concrete Masonry Units: Flat sheen.

    a. Refer to Section 09 96 80 – Elastomeric Coating.

9. Fiber Cement Siding: Flat sheen.

    a. 1st Coat: Alkali resistant primer.
    b. 2nd and 3rd Coat: Exterior 100% acrylic enamel.

B. Interior Work: Provide following paint systems and sheens unless otherwise indicated.

1. Gypsum Board Systems: Eggshell (satin) sheen at walls, flat sheen at ceilings, semigloss sheen at toilet rooms.

    a. 1st Coat: Universal primer.
    b. 2nd and 3rd Coat: Interior latex or acrylic latex emulsion.

2. Metal: Semigloss sheen.

    a. 1st Coat: Touch-up primer, prime if none.
    b. 2nd and 3rd Coat: 100% acrylic enamel.

3. Concrete Masonry Units: Flat sheen.

    a. 1st Coat: Surface filler.
    b. 2nd and 3rd Coat: Interior latex emulsion.
    c. Apply filler at rate to ensure coverage with pores filled.

4. Plaster: Eggshell (satin) sheen at walls, flat sheen at ceilings, semigloss sheen at toilet rooms.

    a. 1st Coat: Latex primer-sealer.
    b. 2nd and 3rd Coat: Interior acrylic latex emulsion.

5. Cotton and Canvas Covering Over Insulation: Flat sheen.

    a. 1st (Size) Coat: Interior latex emulsion.
    b. 2nd Coat: Interior latex emulsion.
    c. Add fungicidal agent to render fabric mildew proof.

6. Concrete Floors: Gloss sheen; non-slip finish.

    a. 1st Coat: Concrete conditioner.
    b. 2nd and 3rd Coat: Polyurethane coating.

C. Sheens: Comply with ASTM D523, reflectance of paint.

1. Flat: 1-10.
2. Satin: 15-30.
3. Eggshell: 30-45.
4. Semigloss: 45-75.
5. Gloss: 75-100.

3.2 CLEAN-UP, PROTECTION, AND REPAIR

A. Clean-Up: During progress of work, remove discarded paint materials, rubbish, cans and rags from site at end of each workday.

1. Clean glass and paint-spattered surfaces immediately by proper methods of washing and scraping, using care not to scratch or damage finished surfaces.

B. Protection: Protect work of other trades, whether to be painted or not; correct damage by cleaning, repairing or replacing, and repainting, as acceptable to Architect.

1. Provide "Wet Paint" signs to protect newly painted finishes.

2. Remove temporary protective wrappings provided by others for protection of their work, after completion of painting operations.

C. Repair: At completion of work of other trades, touch-up and restore damaged surfaces or defaced painted surfaces.

END OF SECTION

SECTION 09 96 70

HIGH-PERFORMANCE COATING

PART 1 - GENERAL

1.1 SUMMARY

A. Section Includes: Provide high-performance coating system of urethane over epoxy primer as indicated, including surface preparation, priming and high-performance coating application.

1. Location: Provide high-performance coating at exterior steel unless otherwise indicated. Coordinate priming with exterior steel specifications.

B. Related Work:

1. Section 09 90 00: Standard painting and coating systems.

1.2 SUBMITTALS

A. Product Data: Manufacturer's technical information, including coating label analysis and application instructions for each material.

B. Samples: Submit samples for review of color and texture; provide list of material and application for each coat of each finish sample.

1. Provide samples of each color and material with texture to simulate actual conditions.

C. Certificates: Provide certificate from each manufacturer stating material is top quality line and suitable for intended use on this Project.

1.3 QUALITY ASSURANCE

A. Sustainability Requirements: Comply with *CAL*Green requirements including those relative to finish material pollution control for paints and coatings.

B. Installer Qualifications: Minimum of five years successful experience in application of high-performance coating systems of type specified and acceptable to manufacturer of coating system.

C. Mock-Up: Duplicate finish of approved samples in field at location as approved by Architect, one complete component or approximately 100 square feet, for approval prior to commencing work.

1. Approved mock-up may be incorporated into Project.

1.4 DELIVERY, STORAGE, AND HANDLING

A. Deliver materials to job site in original, new and unopened packages and containers bearing manufacturer's name and label, with:

1. Name of material, color and sheen.
2. Manufacturer's name, stock number and date of manufacture.
3. Contents by volume, for major pigment and vehicle constituents.
4. Thinning and application instructions.

1.5 SITE CONDITIONS

A. Apply high performance coating when temperature of surfaces and surrounding air are between manufacturer recommended temperatures.

B. Do not apply high performance coating in rain, fog or mist; or when relative humidity exceeds 85-percent; or to damp or wet surfaces.

1.6 WARRANTY

A. Extended Correction Period: Provide for correcting failure of high-performance coating including peeling, chipping, rusting of substrate, cracking, delamination, chalking, and loss of color and sheen.

1. Period: Two years.

B. Manufacturer’s Warranty: Submit manufacturer’s warranty including special manufacturer services as required for manufacturer’s warranty.

1. Period: 10 years.

2. Manufacturer's warranty shall not detract from requirements of extended correction period nor from Owner’s rights under implied and expressed warranties regardless of wording of manufacturer’s warranty.

PART 2 - PRODUCTS

2.1 SYSTEMS MANUFACTURERS

A. DuPont Co. Maintenance Finishes.

B. Tnemec Company, Inc.

C. PPG Protective & Marine Coatings.

D. Substitutions: Refer to Section 01 25 00.

2.2 MATERIALS

A. System Description: Provide high performance coating system of urethane over epoxy primer as indicated, including surface preparation, priming and high-performance coating application.

B. Regulatory Requirements, Volatile Organic Compound (VOC) Emissions: Provide materials complying with applicable air quality management requirements for volatile organic compound (VOC) emissions limitations.

C. Special Coating: High build acrylic polyurethane or aliphatic polyurethane over compatible epoxy primer as recommended by coating manufacturer and suitable for applications indicated and based on quality of following products.

1. Systems:

a. DuPont/Imron with 25P primer.
b. Tnemec/Endura-Shield II (Series 1075) with Series V69 epoxy primer.
c. PPG/AmerShield VOC with Amerlock 400 primer.
d. Substitutions: Refer to Section 01 25 00.

2. Special Coating System: Provide specific primer and coating as recommended by manufacturer for applications indicated, conforming to specified requirements.

a. 1st Coat: Epoxy primer.

b. 2nd and 3rd Coat: High-build acrylic polyurethane or high-build polyurethane.

3. System Requirements:

a. Abrasion: ASTM D4060, CS-17 Wheel, 1,000 grams load, no more than 95 mg. loss after 1000 cycles.

b. Adhesion: ASTM D3359 Method B (Crosshatch Adhesion), coating applied to sandblasted steel and cured 30 days at 77° F, minimum rating of 5 on average of three tests.

c. Humidity: ASTM D4585, no blistering, cracking or delamination of film after 1000 hours exposure.

d. Salt Spray (Fog): ASTM B117, no blistering, rusting, cracking, or delamination of film; maximum 1/8" rust creepage at scribe after 1000 hours exposure.

e. UV: ASTM G154, no blistering, cracking or chalking, less than 35% gloss loss and less than 3.5 MacAdam unit color change after 1500 hours exposure.

4. Coordination: Provide special coating system compatible with prime paints, undercoats, and barrier coats used.

a. Review other Specification sections in which prime paints and zinc-rich touch-coatings up are provided; ensure compatibility of total coatings systems.

b. Upon request from other trades furnish information on characteristics of finish materials proposed for use.

c. Provide barrier coats over incompatible primers or remove and reprime as required. Reprime with zinc-rich primer where galvanized.

d. Notify Architect in writing of any anticipated problems in use of specified coating systems with substrates primed by others.

D. Colors and Finishes:

1. Colors: Where color is not indicated on Drawings or Finish Schedule, provide custom color as directed by Architect.

2. Final acceptance of colors will be from samples applied on site.

3. Color pigments: Pure, non-fading, applicable types to suit substrates and service indicated; no lead content permitted.

4. Sheen: Gloss; comply with ASTM D523, reflectance of coating, 75-100.

E. Material Quality: Provide primers produced by same manufacturer as finish coats; use only thinners approved by coating manufacturer and use only within recommended limits.

PART 3 - EXECUTION

3.1 PREPARATION

A. Inspection: Examine areas and conditions under which high performance coating work is to be applied.

1. Start of high-performance coating work indicates acceptance of surfaces and conditions of surfaces and conditions within any particular area.

2. Do not apply coating over dirt, rust, scale, grease, moisture, scuffed surfaces, or conditions detrimental to a durable coating.

B. Perform preparation and cleaning procedures in accordance with coating manufacturer's instructions and as specified for substrate condition.

C. Remove items in place and not to be coated or provide protection prior to application of high-performance coating; after application of coating reinstall removed items.

D. Clean surfaces before applying high-performance coating; remove oil and grease prior to mechanical cleaning; program cleaning so contaminants from cleaning process do not fall onto wet, newly coated surfaces.

E. Metal Preparation: Comply with coating manufacturer recommendations, but not less than following requirements.

1. Bare Surfaces: Clean surfaces which are not galvanized or shop-coated, of oil, dirt, loose mill scale and other foreign substances by solvent or mechanical cleaning.

2. Galvanized Surfaces: Clean free of oil and surface contaminants, using non-petroleum-based solvent.

3. Painted Surfaces: Clean surfaces of loose paint, dirt, and foreign substances by mechanical cleaning; feather edges of existing paint to provide smooth, even substrate for high performance coating.

F. Mix materials in accordance with manufacturer's directions.

G. Store materials in tightly covered containers; maintain containers used in storage, mixing and application of coating in a clean condition, free of foreign materials and residue.

H. Stir materials before application to produce mixture of uniform density and stir as required during application; do not stir surface film into material, if necessary, strain material before using.

3.2 APPLICATION

A. Apply high performance coating in accordance with manufacturer's directions; use applicators and techniques best suited for substrate and coating material being applied.

1. Apply additional coats when stains or blemishes show through final coat, until coating is a uniform finish, color and appearance.

2. Provide extra attention to assure dry film thickness at corners and crevices is equivalent to that of flat surfaces.

B. Scheduling: Apply first coat to surfaces that have been cleaned, pretreated or prepared for high performance coating as soon as practicable after preparation.

1. Allow time between successive coatings to permit proper drying.

2. Do not recoat until coating feels firm and does not deform or feel sticky under moderate thumb pressure.

C. Minimum Coating Thickness: Apply materials at not less than manufacturer's recommended spreading rate, to establish a total dry film thickness as recommended by coating manufacturer.

D. Prime Coats: Apply to items not previously primed; recoat primed and sealed surfaces where there is evidence of suction spots or unsealed areas in first coat.

E. Finish Coats: Provide even texture; leave no laps, irregularity in texture, skid marks, or other surface imperfections; edges clean and sharp where work joins other materials and colors.

1. Provide opaque, uniform finish, color and coverage; cloudiness, spotting, holidays, brush marks, runs, sags, ropiness and other surface imperfections are not acceptable.

F. Completed Work: Match approved samples and mock-up for color, texture and coverage. Remove, refinish or recoat work not accepted.

3.3 CLEAN-UP, PROTECTION AND REPAIR

A. Clean-Up: During progress of work, remove discarded coating materials, rubbish, cans and rags from site at end of each workday.

1. Clean glass and coating-spattered surfaces immediately by proper methods of washing and scraping, using care not to scratch or damage finished surfaces.

B. Protection: Protect work of other trades, whether to be coated or not; correct damage by cleaning, repairing or replacing, and refinishing, as acceptable to Architect.

1. Provide "Wet Coating" or "Wet Paint" signs to protect newly coated surfaces.

2. Remove temporary protective wrappings provided by others for protection of their work, after completion of coating operations.

C. Repair: At completion of work of other trades, touch-up and restore damaged surfaces and defaced coated surfaces.

END OF SECTION

SECTION 10 11 00

VISUAL DISPLAY BOARDS

PART 1 - GENERAL

1.1 SUMMARY

A. Section Includes: Provide visual display boards including liquid marker type whiteboards and cork tackboards with trim, hardware, and accessories as required for complete installation.

1. Provide horizontal sliding visual display boards where indicated.
2. Provide vertical sliding visual display boards where indicated.

1.2 SUBMITTALS

A. Shop Drawings: Clearly indicate board sizes and layout, method of attachment, accessories, trim profiles, details and finish.

B. Samples: Furnish sample whiteboard and tackboard surfaces with samples of aluminum trim and chalk rail, in selected colors and finish.

1.3 DELIVERY, STORAGE, AND HANDLING

A. Do not deliver materials to site until areas in which they are to be installed are ready to receive them.

B. Deliver materials to site in protective covering in a manner to protect finishes.

PART 2 - PRODUCTS

2.1 SYSTEMS MANUFACTURERS

A. Claridge Products and Equipment, Inc.

B. Greensteel Division of PolyVision Corporation.

C. ADP Lemco Inc.

D. AARCO Products Inc.

E. K-PRO Specialty Products.

F. Substitutions: Refer to Section 01 25 00.

2.2 MATERIALS

A. System Description: Provide visual display boards including liquid marker type whiteboards and cork tackboards with trim, hardware, and accessories.

B. Steel Sheet for Porcelain Enameling: ASTM A424, minimum 24 gage.

C. Aluminum Extrusions: ASTM B221, minimum 0.062" wall thickness.

D. Aluminum Sheet: ASTM B209, minimum 0.015" thick.

E. Galvanized Steel Sheet: ASTM A1011 or A1008, Class 1; ASTM A924 and A653, G90 coating; minimum 26 gage (0.0179").

F. Tempered Hardboard: Manufacturer's standard material.

G. Plywood: PS 1, manufacturer's standard.

2.3 FABRICATION

A. Whiteboards: Porcelain writing surface manufactured specifically for use with liquid marker systems.

1. Type:

a. Claridge/LCS Liquid Chalk System.
b. Greensteel/Dry Marker Board.
c. ADP Lemco/Markerboards.
d. AARCO/Porcelain Steel Markerboards.
e. K-PRO/Porcelain Steel Markerboards.
f. Substitutions: Refer to Section 01 25 00.

2. Core: Minimum 3/8" thick plywood.

3. Balance porcelain writing surface with aluminum or sheet steel backing, aluminum foil is not acceptable.

4. Colors: Where color is not indicated on Drawings or Finish Schedule, provide custom color as directed by Architect.

5. Accessories: Provide manufacturer's standard accessories including map hooks and projection screen hooks.

6. Markerboard Face Sheets: Porcelain steel markerboard manufactured specifically for use with liquid marker systems and magnetic surface.

a. Provide markerboard face sheets for sliding panels and back panel.

b. Provide markerboard face sheets and tackboard face sheets for sliding panels and markerboard for back panel.

7. Balance porcelain writing surface with aluminum or sheet steel backing, aluminum foil is not acceptable.

8. Core: Manufacturer’s standard for specified system.

9. Colors: Where color is not indicated on Drawings or Finish Schedule, provide custom color as directed by Architect.

B. Frames: Extruded aluminum, factory applied, concealed fastening; integral chalk rail with molded end closures; anodized finish, matching Architect-approved sample.

1. Framed Units: Fabricate one-piece units without joints unless sizes indicated are not available as one-piece units.

a. Multiple Units: Provide joints located at whiteboard and tackboard intersection or at areas as approved by Architect; concealed splice joints typical.

b. Factory Fabricate: Factory fabricate except where too large for shipping.

C. Attachment Hardware: Manufacturer's standard fully concealed attachment system for securing units to wall surfaces.

PART 3 - EXECUTION

3.1 INSTALLATION

A. Securely mount whiteboards and tackboards in accordance with manufacturer's recommendations, level and true to line.

1. Multiple Units: Provide flush, butt, hairline joints to ensure a smooth writing surface between whiteboards.

2. Sliding Units: Provide rattle and chatter-free operation; boards to move with maximum 5-pounds pressure and to stop and hold in any position.

B. Cleaning: At completion of work, clean surfaces and trim, leaving ready for use.

END OF SECTION

SECTION 10 14 00

SIGNAGE

PART 1 - GENERAL

1.1 SUMMARY

A. Section Includes: Provide general signage as indicated complete with attachment devices and accessories as required for complete installation.

B. Related Sections:

1. Section 09 90 00: Traffic line paint.
2. Section 10 44 00: Fire extinguisher cabinet graphics.
3. Division 14: Elevator graphics.
4. Division 26: Photoluminescent exit signs.

1.2 SUBMITTALS

A. Product Data: Furnish manufacturer's literature and indicate each sign type, style, color, and method of attachment.

B. Shop Drawings: Furnish listing of sign types, lettering and locations, along with dimensions of each sign.

1. Computerized Output: Furnish computerized samples of signs and graphics at full scale duplicating final appearance.

2. Dimensional Letter Signs: Furnish complete shop drawings regarding fabrication and method of attachment of dimension letter signs.

3. Photoluminescent Egress Path Signage: Submit complete shop drawings indicating locations of luminous egress path markings and signage.

C. Samples: Furnish full size samples where requested.

D. Certification: Furnish manufacturer certification that photoluminescent egress path markings and signage conform to California Building Code requirements.

1.3 QUALITY ASSURANCE

A. Sustainability Requirements: Comply with *CAL*Green requirements including those relative to finish material pollution control for adhesives.

1.4 DELIVERY, STORAGE, AND HANDLING

A. Package separately or in like groups of names, labeled as to names enclosed; include installation template, attachment system and installation instructions.

PART 2 - PRODUCTS

2.1 SYSTEMS MANUFACTURERS

A. ASI Modulex, ASI Sign Systems, Inc.

B. Mohawk Sign Systems.

C. Vomar Products, Inc.

D.

E. Substitutions: Refer to Section 01 25 00.

2.2 MATERIALS

A. System Description: Provide signage as indicated with attachment devices and accessories.

B. Regulatory Requirements: Provide signs for assuring access for persons with disabilities in accordance with state and federal regulations.

1. California Regulations: Comply with California Building Code.

2. Federal Regulations: Comply with Americans with Disabilities Act (ADA) Standards.

C. Dimensional Letter Signage: Provide individual letter signs as indicated.

1. Aluminum: Manufacturer's standard for individual letter signs.

a. Finish: Kynar / Hynar finish – custom color

2. Fabrication: Fabricate dimensional letters as indicated, of minimum 0.25" plate or casting with edges and corners smooth and finished to match adjacent metal finishes.

3. Attachment: Secure letters using connections concealed after installation; method subject to Architect approval.

a. Take care back welding does not damage exposed sign surfaces.

D. Dimensional Super Graphic Signage:

1. Aluminum: Manufacturer's standard for shape / graphic signs.

a. Finish: Kynar / Hynar finish – custom color

2. Fabrication: Fabricate shapes as indicated, of minimum 0.25" plate or casting with edges and corners smooth and finished to match adjacent metal finishes.

3. Attachment: Secure using connections concealed after installation; method subject to Architect approval.

E. Toilet Room Door Signs: Provide door signs conforming to California requirements for signs for toilet rooms; concealed mounting system.

1. Material, Plastic: Manufacturer’s standard colored plastic/photopolymer signs.

a. Texture: Smooth.

b. Colors: Where color is not indicated on Drawings or Finish Schedule, provide custom color as directed by Architect.

2. Material:

a. Aluminum: Manufacturer's standard for individual letter signs.

1) Finish: Clear anodized finish, AA-M12C22A41, Class I, AAMA 607.1.

b. Stainless Steel: ASTM A666, Type 304 nonmagnetic corrosion resistant stainless steel with No. 4 satin directional polish finish.

3. Total Thickness: 0.25".

4. Provide signs required by California Code of Regulations Title 24.

a. Men's Room: 12" equilateral triangle, vertex pointing up.

b. Women’s Room: 12" diameter circle.

c. Unisex Shower / Rest Room: 12" diameter circle with equilateral triangle, vertex pointing up, superimposed on the circle; circle and triangle each 0.25" thick.

1) Colors: Where color is not indicated on Drawings or Finish Schedule, provide custom color as directed by Architect.

5. Colors: Where color is not indicated on Drawings or Finish Schedule, provide custom color as directed by Architect.

6. Symbols: As selected from manufacturer's standard symbols.

7. Adhesive: Type as recommended by sign manufacturer for type of substrate involved.

F. Toilet Room Wall Signs: Provide signs conforming to California Building Code and ADA Standards for signs for permanent rooms, with inset symbols and with raised and Braille characters; concealed mounting system.

1. Material, Plastic: Manufacturer’s standard colored plastic/photopolymer signs.

a. Texture: Smooth.

2. Colors: Where color is not indicated on Drawings or Finish Schedule, provide custom color as directed by Architect.

3. Material:

   a. Aluminum: Manufacturer's standard for individual letter signs.

      1) Finish: Clear anodized finish, AA-M12C22A41, Class I, AAMA 607.1.

   b. Stainless Steel: ASTM A666, Type 304 nonmagnetic corrosion resistant stainless steel with No. 4 satin directional polish finish.

4. Comply with California Building Code and ADA Standards for raised and Braille characters, pictorial symbols, finish, and contrasts requirements.

G. Entry Decals: Provide minimum 6" square decals with international handicapped symbol white on blue background with white border, applied to glass at accessible entry doors of existing buildings where all entry doors are not accessible.

H. Stairway Signs: Provide colored plastic/photopolymer signs in stairways, conforming to California Building Standards Code, Section 1022.9.

1. Lettering: Type as required by CBC.

2. Colors, Size, and Style: Conform to referenced code requirements and as approved by Architect.

   a. Colors: Where color is not indicated on Drawings or Finish Schedule or specifically required by applicable code, provide custom color as directed by Architect.

3. Information: Identify stairway, indicate whether there is roof access, floor level, and upper and lower terminus of stairway, and story of and direction to exit discharge.

4. Provide raised five-pointed star located to left of identifying floor level at exit discharge level.

5. Provide Floor Identification Signs required by CBC including both tactile and Braille sign.

6. Provide photoluminescent egress path marking and signs as required by California Building Code for high rise buildings and as specified for photoluminescent egress markings and signage.

I. Porcelain Signs at Parking: Provide porcelain enamel on steel sign with beaded text and symbols meeting requirements of California Building Standards Code and with ADA Standards.

1. At entry to parking provide state required sign indicating unauthorized vehicles parking in accessible parking spaces may be towed at owner's expense using exact wording required by CBC.

2. Verify location and telephone number of location vehicle is to be towed with Owner; place this information as permanent part of sign wording.

3. At parking spaces provide California required reflectorized sign, minimum 70 sq. inches, with symbol indicating accessibility.

4. At van accessible parking spaces provide required "VAN PARKING" signs.

J. Tactile Exit Door Signs: Provide colored plastic/photopolymer signs, conforming to California Building Code Section 1011.3 and ADA Standards for signs for permanent rooms, with tactile raised and Braille characters; concealed mounting system.

1. Colors: Where color is not indicated on Drawings or Finish Schedule, provide custom color as directed by Architect.

2. Size and Style: As indicated on Drawings.

K. Room Identification and Direction Signs: Provide signs conforming to California and ADA Standards for permanent signs, total thickness 0.125"; provide raised and Braille characters conforming to California and ADA Standards; concealed mounting.

1. Material, Plastic: Manufacturer’s standard colored plastic/photopolymer signs.

a. Texture: Smooth.

2. Colors: Where color is not indicated on Drawings or Finish Schedule, provide custom color as directed by Architect.

3. Material:

a. Aluminum: Manufacturer's standard for individual letter signs.

1) Finish: Clear anodized finish, AA-M12C22A41, Class I, AAMA 607.1.

b. Stainless Steel: ASTM A666, Type 304 nonmagnetic corrosion resistant stainless steel with No. 4 satin directional polish finish.

4. Sizes and Styles: As indicated on Drawings, as directed by Architect where not otherwise indicated.

L. Applied Copy Signs and Graphics: Letters and graphics as indicated on Drawings; Contractor option of silk-screen or vinyl applied.

1. Silk-screen Signs and Graphics: Computer design screens for signs and graphics to designs and criteria established by Architect.

a. Silk-screen Lacquer: Match Advanced Screen Products/Industrial Gloss Lacquer Silk-screen Ink; colors as selected by Architect.

2. Vinyl Signs and Graphics: Computer design vinyl signs and graphics to designs and criteria established by Architect.

a. Vinyl: Opaque non-reflective vinyl film, minimum 0.0035" thick, with pressure sensitive adhesive backing suitable for applications indicated; match 3M/Scotchcal Vinyl Film.

3. Colors: Where color is not indicated on Drawings or Finish Schedule, provide custom color as directed by Architect.

M. Tactile Emergency Evacuation Signs: Silk-screened polycarbonate with screening on back and with tactile and Braille information conforming to California requirements and ADA Standards.

1. Information: Provide sign system with information as required by applicable authorities for emergency egress.

2. Silk-Screen Colors:

a. Colors: Where color is not indicated on Drawings or Finish Schedule, provide custom color as directed by Architect.

b. Silk-screen Lacquer: Match Advanced Screen Products/Industrial Gloss Lacquer Silk-screen Ink; colors as selected by Architect.

3. Size and Style: As indicated on Drawings and acceptable to applicable authorities.

4. Attachment: Method subject to Architect approval.

N. Photoluminescent Egress Path Markings and Signage: Provide exit path marking and signage required by applicable codes including but not limited to exit path markings, stair nosing, handrails, demarcation and obstruction markings, doors, and hardware.

1. Acceptable Manufacturers:

a. Balco Inc./IllumiTread Exit Path Markings.
b. ZERO International/Exit Marking Systems.
c. American Permalight Inc./Egress Path Markings.
d. Active Safety/Egress Path Markings.
e. Substitutions: Refer to Section 01 25 00.

2. Refer to CBC Title 24, Part 2, Section 1025.

3. System: UL 1994 listed.

4. Photoluminescent exit signs are in Division 26.

PART 3 - EXECUTION

3.1 INSTALLATION

A. General: Install signs in accordance with manufacturer recommendations and installation instructions, free from distortions and defects.

B. Dimensional Letter Signage: Locate dimensional letters with spacing based on full-size computer-generated installation drawings secured to structure as required to resist anticipated loads.

1. Final Location: As approved in field by Architect based on full size drawings.

C. Toilet Room Door Signs: Install signs on doors after doors are painted and finished.

1. Location: Mount signs with centerline of sign between 58" and 60" height as required by applicable code.

2. Install centered and level, in line, in accordance with the manufacturer's recommendations.

3. Clean and polish, remove excess adhesive.

D. Toilet Room Wall Signs: Install signs on walls after surfaces on which they are to be mounted are painted and finished.

1. Location: Mount signs at 48" to 60" height as required by applicable codes on strike side of door.

2. Location: Mount signs with tactile characters 48" minimum (baseline of lowest Braille cells) and 60" maximum (baseline of highest line of raised characters) above finished floor and with on strike side of door for room identification signs as required by applicable codes, at heights indicated on details.

3. Install level, in line, in accordance with California Building Code and ADA Standards to allow a person to approach within 3" of signs without being within a door swing and without encountering protruding objects.

4. Clean and polish, remove excess adhesive.

E. Entry Signs: Install in locations as approved by Architect.

F. Tactile Exit Door Signs: Install at doors with lighted “EXIT” signs; apply after walls are finished.

1. Location: Mount signs at 48" to 60" height as required by applicable codes on strike side of door.

2. Install level, in line, in accordance with the manufacturer's recommendations and ADA Standards to allow a person to approach within 3" of signs without being within a door swing and without encountering protruding objects.

3. Clean and polish, remove excess adhesive.

G. Room Identification and Direction Signs: Install signs after walls are finished.

1. Location: Mount signs at 48" to 60" height as required by applicable codes on strike side of door for room identification signs, where indicated for direction signs.

2. Room Identification Signs Location: Mount signs with tactile characters 48" minimum (baseline of lowest Braille cells) and 60" maximum (baseline of highest line of raised characters) above finished floor and with on strike side of door for room identification signs and where indicated for directional signs.

3. Install signs level, in line, in accordance with the manufacturer's recommendations, California Building Code and ADA Standards.

4. Install room identification signs at doors to allow a person to approach within 3" of signs without being within a door swing and without encountering protruding objects.

5. Clean and polish, remove excess adhesive.

H. Applied Copy Signs and Graphics: Examine surfaces and construction for conditions adversely affecting installation, performance and quality of work.

1. Apply signage and graphics centered and level, in line, in accordance with manufacturer's recommendations.

I. Emergency Evacuation Signs: Install signs after walls are finished.

1. Location: Mount signs at locations indicated, as directed by Architect and applicable authorities if not otherwise indicated.

2. Install signs level and in accordance with the manufacturer's recommendations and requirements of applicable authorities.

3. Clean and polish.

END OF SECTION

SECTION 10 21 20

PHENOLIC TOILET COMPARTMENTS

PART 1 - GENERAL

1.1 SUMMARY

A. Section Includes: Provide phenolic plastic partitions for toilet compartments including hardware, attachment devices, and integral accessories as required for complete installation.

1. Urinal Screens: Provide wall mounted phenolic plastic partitions for urinal screens including attachment hardware for complete finished installation.

B. Related Sections:

1. Section 10 28 00: Toilet accessories.

1.2 REFERENCES

A. Americans with Disabilities Act (ADA) Standards.

B. California Building Code: California Code of Regulations, Title 24, Part 2, requirements for providing accessibility for persons with disabilities.

1.3 SUBMITTALS

A. Product Data: Submit manufacturer's literature.

B. Shop Drawings: Clearly indicate partition layouts, swing of doors, elevations, anchorage and mounting details, panel construction, hardware, finishes and relevant dimensions.

C. Samples: Submit samples of metal finish.

1.4 QUALITY ASSURANCE

A. Sustainability Requirements: Comply with *CAL*Green requirements including those relative to finish material pollution control for adhesives, sealants, and caulks.

PART 2 - PRODUCTS

2.1 SYSTEMS MANUFACTURERS

A. Global Partitions, an ASI Group Company. (Basis of Design)

B. Flush Metal Partition Corp.

C. Bradley Corporation Mills Partitions.

D. General Partitions Mfg. Corp.

E. Substitutions: Refer to Section 01 25 00.

2.2 MATERIALS

A. System Description: Provide phenolic plastic partitions including hardware, attachment devices, and integral accessories.

1. Toilet Compartment Type: Floor mounted, overhead braced.

2. Urinal Screens: Provide wall mounted urinal screens.

B. Regulatory Requirements, Access: Comply with California Building Code and Americans with Disabilities Act (ADA) Standards.

1. Door Width: Provide minimum 32" clear door openings when front entry, minimum 34" clear door openings when side entry.

2. Spacing: Provide minimum 60" clear width, and front space as applicable for type of compartment.

3. Reinforcing: Provide reinforcing for grab bars indicated to be partition mounted.

4. Urinal Screens: Provide minimum 30" clear space at urinal.

C. Regulatory Requirements, Fire Rating: Comply with requirements for fire ratings for interior finishes with either ASTM E84 or NFPA 286, Corner Burn Test as applicable.

D. Phenolic Panels: Manufacturer's standard phenolic core with high pressure melamine color surface on faces, with exposed black phenolic edges burnished and slightly rounded. **Basis of Design: ASI Accurate Partitions, Graphite Grafix #3020, black phenolic core.**

E. Pilaster Shoes: 3" high; ASTM A666, Type 304, No. 4 polished finish; stainless steel.

F. Attachments, Screws and Bolts: Stainless steel; tamper proof type; heavy duty extruded aluminum brackets.

G. Hardware: Manufacturer's standard chrome plated or similar finish.

1. Hinges: Cast pivot hinges, gravity self-closing type, adjustable for door close positioning; nylon bearings.

2. Latch: Slide latch; door strike and keeper with rubber bumper.

3. Coat Hook/Bumper: Combination coat hook and bumper unit, maximum 48" above finished floor.

4. Wall Bumper: Wall mounted rubber bumper for out-swinging doors.

5. Pulls: Manufacturer’s standard; provide two "U-shaped" pulls immediately below latch at compartments accessible to persons with disabilities (compartments with grab bars), one inside and one outside.

H. Overhead Braced Partition Headrails: 1" by 1-5/8" tubular metal, with cast socket type wall brackets.

1. Colors: Where color is not indicated on Drawings or Finish Schedule, provide custom color as directed by Architect.

2.3 FABRICATION

A. Fabricate: Manufacturer's standard construction.

B. Doors and Panels: Minimum 3/4" thick doors and 1/2" thick panels, minimum 24" wide by minimum 58" high.

1. Provide wider doors where required for accessibility for persons with disabilities.

C. Pilasters: 1-1/4" thick, constructed same as doors, of sizes required to suit cubicle widths and spacing.

PART 3 - EXECUTION

3.1 EXAMINATION

A. Examine site conditions to which work is to be applied.

B. Take site dimensions affecting this work.

C. Ensure correct spacing and size of plumbing fixtures; take special note of fixtures in compartments indicated to be designed for persons with disabilities to assure clearances complying with access regulations.

D. Ensure correct location of built-in framing, anchorage, and bracing, where required.

3.2 INSTALLATION

A. Install units in accordance with manufacturer recommendations and installation instructions, secure, plumb, level, and square.

B. Leave 1/2" space between wall, panels and end pilasters.

C. Attach panel brackets securely to walls using anchor devices.

D. Attach panels and pilasters to bracket with through sleeve tamper proof bolts and nuts.

E. Locate headrail joints at pilaster center lines.

F. Provide for adjustment of floor variations with screw jack through steel saddles integral with pilaster; conceal floor fastenings with stainless steel shoes.

G. Equip each door with hinges, latch, and coat hook/bumper combination.

H. Install door strike keeper and door bumper on each pilaster in alignment with door latch.

I. Adjust and align hardware to uniform clearance at vertical edges of doors not exceeding 3/16".

J. Adjust hinges to locate doors in partial open position when unlatched, except adjust hinges to return doors to closed position at stalls designed for use by persons with disabilities.

K. Anchor urinal screen panels to walls with either two panel brackets each or continuous angle brackets on both sides.

3.3 CLEANING

A. Field touch-up of scratches and defaced finishes will not be permitted; replace damaged, scratched and marred defective materials with new, undamaged materials.

B. Remove protective coverings and clean surfaces in accordance with manufacturer recommendations.

END OF SECTION

SECTION 10 22 20

OPERABLE PARTITIONS

PART 1 - GENERAL

1.1 SUMMARY

A. Section Includes: Provide manually operated, top supported, operable partitions with retractable seals, including hardware and accessories as required for complete, operable system.

1. Acoustical Closure: Review Contract Documents to ensure acoustical closure of adjacent construction matches operable partition acoustical performance to prevent flanking sound around partition into adjacent spaces.

a. Provide additional construction as required to ensure acoustical closure.

2. Support System: Provide structural steel support system connected to building structure at points approved by Architect.

1.2 ADMINISTRATIVE REQUIREMENTS

A. Design/Build Requirements: Provide services of registered structural engineer licensed in California with experience designing structural support systems for operable partitions.

1. Distribute loads to locations on building structure capable of supporting system without detrimental effects.

B. Pre-Installation Meeting: Convene not less than one week prior to commencing work of this Section. Require attendance of those directly affecting work of this Section.

1. Review installation procedures and coordination required with related work.

1.3 SUBMITTALS

A. Product Data: Furnish materials description, operation and maintenance instructions.

B. Shop Drawings: Show partition and track layout, details of head, jamb and sill conditions, stacking arrangement, hardware and operating mechanism.

1. Indicate details of acoustical barrier over partitions system.

2. Provide template drawings for items supported or anchored by permanent construction.

3. Indicate details of pass doors.

C. Samples: Furnish samples of panel finish and edge construction.

D. Test Reports: Furnish copies of certificates by independent testing laboratories for following:

1. STC rating.
2. Flame spread classification.
1. Fire resistance ratings.
2. Field STC Tests: Furnish previous project test reports.

E. Certificates:

1. Manufacturer Certification: Furnish manufacturer's certification indicating system complies with Contract Documents.

2. Installer Acceptance: Furnish letter from manufacturer indicating acceptance of installer for this Project.

3. Design/Build Engineer Certification: Furnish certification from California registered engineer indicating structural support system complies with Contract Documents and applicable codes.

1.4 QUALITY ASSURANCE

A. Qualification of Installers: Minimum five years successful experience in installing operable partitions and accessories on comparable projects.

1. Acceptable to manufacturer of operable partition.

1.5 WARRANTY

A. Extended Correction Period: Provide for correcting failure of operable partition system from proper operation, including acoustical characteristics.

1. Special Warranty Period: Two years.

B. Manufacturer's Warranty: Submit manufacturer's warranty including special manufacturer services as required for manufacturer's warranty.

1. Period: Not less than 10 years.

2. Manufacturer's warranty shall not detract from requirements of extended correction period nor from Owner's rights under implied and expressed warranties regardless of wording of manufacturer's warranty.

PART 2 - PRODUCTS

2.1 SYSTEMS MANUFACTURERS

A. Modernfold, a DORMA Group Company.

B. Hufcor, Inc.

C. Substitutions: Refer to Section 01 25 00.

2.2 MATERIALS

A. System Description: Provide electrically operated operable partitions with retractable seals and including hardware and accessories.

1. Partition Type: Top-supported, side-stacking, electrically operated, with flush panels; manufacturer's STC 50 as required to achieve required field performance requirements.

a. Basis of Design: **Hufcor 643E**

2. Acoustical Closure: Provide acoustical closure of adjacent construction as required to match operable partition acoustical performance and as required to prevent flanking sound around partition into adjacent spaces.

3. Structural Support: Provide structural support for operable partitions.

B. Design Requirements: Support system to be designed by registered professional structural engineer licensed in California.

1. Distribute loads to locations on building structure capable of supporting system without detrimental effects.

C. Fire Performance Requirements: Provide products listed by Underwriters Laboratories (UL), or similar independent laboratory acceptable to applicable authorities.

1. Flame Spread/Smoke Generation: Provide products meeting code requirements for maximum 25 flame-spread and 450 smoke developed; Class A, ASTM E84.

D. Field Acoustical Performance Requirements: Provide minimum three field sound transmission rating tests on previous projects of similar size and scope indicating system to be provided has minimum FSTC of NIC 40.

1. Ratings: Determined in accordance with ASTM E413; tests by Architect approved independent testing laboratory.

2. Field Sound Transmission Rating: Minimum FSTC of NIC 40 when tested in accordance with ASTM E336, using reverberant-field procedure and full octave bands rather than one-third octave bands.

E. Partition Type: Top-supported, side-stacking, manually operated, with flush panels.

1. Panel Configuration: Paired panels.

F. Panel Construction: Factory assembled, consisting of minimum 16 gage welded steel channel perimeter frame with intermediate stiles, high density sound retardant insulation.

1. Panel Thickness: Nominal 3" to 4" thick; review Drawings for space provided for panel storage; provide panel system suitable of allowable space.

a. Notify Architect during bidding if Project design requires potential modification for system to comply with Contract Document.

b. Failure to notify Architect during bidding signifies acceptance of conditions indicated.

2. Panel Skins: Minimum 24-gage steel with rust inhibitive prime coat of paint.

3. Panel Support Bolts: Minimum 1/2" diameter; of fail-safe design that prevents loosening or backing out after panels have been installed.

4. Panel Materials: Incombustible, moisture resistant, and dimensionally stable.

5. Construction: All steel construction.

G. Track System: Overhead track designed for extra heavy duty; secured to structural support system by adjustable bolts.

1. Panel Supports: Ball bearing trolley assembly, capable of universal movement, turning on a central bearing and shall not require radius turns or switching mechanisms.

H. Deflection Compensation: Design system to accommodate specified long-term dead load deflection of up to 1/2" at any point in span while maintaining operational and acoustical qualities.

I. Seals: Provide system with single mechanism to activate floor seals; seals shall not contact floor or track during movement of panels.

1. Floor Seals: Durometer rating compatible with floor surfaces.

2. Vertical Seals: Manufacturer's standard as required to achieve acoustical performance specified.

3. Seal Materials: Resistant to fatigue and cleaning compounds and shall not mar floor or ceiling finishes.

4. Floor Guide and Floor Attachments: Not permitted.

J. Fixed and Operable Closure Jambs: Acoustical type designed to maintain acoustical seal at perimeter walls and junctions of operable partition; security affix to building walls.

1. Jamb Seals: Manufacturer's standard acoustic seals at head and side jambs.

2. Floor Seals: Provide flexible compression type; design cam-action of hinges and manual closing of door to compress floor seal and maintain acoustical performance of partition.

a. Raised Sills and Automatic Threshold Closures: Not permitted.

3. Factory Assembly: Factory assemble complete door unit and adjust with hardware and seals prior to shipment.

K. System Supports and Anchors: ASTM A36 steel shapes as required to attach operable partitions to building structural system.

1. Provide bracing at track intersections to resist panel impacts.

L. Finish: Panel and door finish shall be heavy duty vinyl fabric.

1. Apply finish to panels in shop. Return into vertical panel seams and mechanically fasten with removable astragal at panel edge.

2. Colors: Where color is not indicated on Drawings or Finish Schedule, provide standard range of products for architect approval.

PART 3 - EXECUTION

3.1 EXAMINATION

A. Examine floor and overhead construction for conformance with tolerances; verify dimensions of in place and subsequent construction.

B. Installation of partition shall constitute acceptance of existing conditions.

3.2 INSTALLATION

A. Install operable partition system in accordance with manufacturer's recommendations and installation instructions as required to assure compliance with sound transmission test requirements.

1. Comply with ANSI E557, Standard Recommended Practice for Architectural Application and Installation of Operable Partitions.

2. Lubricate bearings and sliding parts; adjust to ensure smooth, easy operation.

3. Match operable partitions for color and pattern by using partition sections from cartons in same sequence as manufactured and packaged.

4. Broken, cracked, chipped, damaged, and deformed partitions are not acceptable.

B. Upon completion of installation, test operation of partition in presence of Architect.

C. Instruct Owner's personnel in operation and maintenance of partition.

3.3 FIELD QUALITY CONTROL

A. Site Acoustical Tests: Determine field sound transmission class values in accordance with ASTM E336; tests by Architect approved independent testing laboratory.

1. Field Sound Transmission Rating: Minimum FSTC of NIC 40 when tested in accordance with ASTM E336, using reverberant-field procedure and full octave bands rather than one-third octave bands.

2. Failed Tests: Make corrections and re-test.

3.4 CLEANING

A. Clean operable partition surfaces and adjacent surfaces soiled by operable partition work; avoid use of abrasive cleaners and solutions containing corrosive solvents.

1. Remove and replace panels and adjacent construction damaged by installation or cleaning operations.

END OF SECTION

SECTION 10 26 10

STAINLESS STEEL CORNER GUARDS

PART 1 - GENERAL

1.1 SUMMARY

A. Section Includes: Provide surface mounted stainless-steel corner guards, including mounting adhesive and accessories as required for complete finished installation.

1.2 SUBMITTALS

A. Product Data: Furnish manufacturer's product literature.

B. Samples: Furnish samples of finish.

PART 2 - PRODUCTS

2.1 SYSTEMS MANUFACTURERS

A. Babcock-Davis, Inc.

B. In-Pro Corporation.

C. Substitutions: Refer to Section 01 25 00.

2.2 MATERIALS

A. System Description: Provide surface mounted stainless-steel corner guards, including mounting adhesive and accessories.

B. Corner Guard: ASTM A666, Type 304 stainless steel with satin finish; not less than 18-gage.

1. Size: 3-1/2" by 3-1/2" by 48" high unless otherwise indicated.

C. Attachment: Manufacturer's recommended adhesive for type of wall.

PART 3 - EXECUTION

3.1 INSTALLATION

A. Install stainless-steel corner guards in accordance with manufacturer's recommendations and installation instructions, straight and true to line.

B. Allow for 10 corner guards. Contractor to coordinate locations with client prior to occupancy.

END OF SECTION

SECTION 10 28 00

TOILET ACCESSORIES

PART 1 - GENERAL

1.1 SUMMARY

A. Section Includes: Provide toilet accessories with attachment hardware and rough-in frames as required for complete, operational installation.

B. Related Sections:

1. Section 08 80 00: Frameless glass mirrors.

2. Section 10 21 10: Hardware for toilet partitions, including coat hook/bumper mounted on partition doors, and wall bumpers for out swinging doors.

1.2 SUBMITTALS

A. Product Data: Submit manufacturer's product data illustrating each accessory at large scale.

B. Samples: Provide one sample of each type of fixture specified.

1.3 QUALITY ASSURANCE

A. Sustainability Requirements: Comply with *CAL*Green requirements including those relative to finish material pollution control for adhesives.

1.4 DELIVERY, STORAGE, AND HANDLING

A. Deliver inserts and rough-in frames to jobsite at appropriate time for building in.

B. Do not deliver accessories to site until rooms in which they are to be installed are ready to receive them.

C. Pack accessories individually, protect each item and its finish.

1.5 SITE CONDITIONS

A. Protect adjacent or adjoining finished surfaces from damage during installation of work of this section.

B. Before starting work notify Architect in writing of conditions detrimental to installation or operation of units.

C. Verify with Architect exact location of accessories.

1.6 WARRANTY

A. Extended Correction Period:

1. Replace mirrors which exhibit signs of desilvering or distortion.

2. Period: Two years.

PART 2 - PRODUCTS

2.1 SYSTEMS MANUFACTURERS

A. Bobrick Washroom Equipment, Inc.

B. Bradley Corporation.

C. American Specialties, Inc.

D. Manufacturers listed on Toilet Accessories Schedules.

E. Substitutions: Refer to Section 01 25 00.

2.2 MATERIALS

A. System Description: Provide toilet accessories with attachment hardware and rough-in frames.

1. Provide standard materials and finishes for accessories listed; where more than one material or finish is available and not otherwise indicated provide as selected by Architect from manufacturer’s standard materials and finishes.

B. Regulatory Requirements - Access for Persons with Disabilities: Comply with California Building Standards Code and Americans with Disabilities Act (ADA) Standards.

C. Stainless Steel Sheet: ASTM A666, commercial grade, Type 304, gages as standard with manufacturer of specified items.

D. Stainless Steel Tubing: ASTM A269, commercial grade, seamless welded.

E. Mirror Glass: ASTM C1036, q1 mirror select clear float glass with full silver coating, copper coating and organic coating; minimum 1/4" thick.

F. Sheet Steel: ASTM A1008, cold rolled stretcher leveled; minimum G90 galvanized coating, ASTM A924 and A653.

G. Adhesive: Epoxy type contact cement as recommended by accessory manufacturer; comply with applicable requirements for limitations on volatile organic compound (VOC) emissions.

H. Fasteners, Screws, and Bolts: Hot dip galvanized; as recommended by accessory manufacturer for component and substrate.

I. Keys: Provide universal keys for access to toilet accessory units requiring internal access for servicing and supply.

1. Provide minimum six keys to Owner representative.

2. Coin Operated Units: Provide locked coin box keyed separately from standard units, coin operated units keyed alike.

2.3 FABRICATION

A. Weld and grind smooth joints of fabricated components.

B. Form exposed surfaces from one sheet of stock, free of joints.

C. Fabricate units with tight seams and joints, exposed edges rolled; hang doors and access panels with continuous piano hinges; provide concealed anchorage where possible.

D. Provide steel anchor plates and anchor components for installation on building finishes.

E. Form surfaces flat without distortion; maintain flat surfaces without scratches and without dents; finish exposed edges eased, free of sharp edges where potential exists for physical contact.

F. Back paint components where contact is made with building finishes, to prevent electrolysis.

G. Hot-dip galvanize ferrous metal anchors and fastening devices.

H. Assemble components in shop; package complete with anchors and fittings.

2.4 FINISHES

A. Exposed Finishes: Stainless steel, number 4, satin finish; satin chrome finish acceptable where stainless steel not available for accessory item listed or scheduled.

B. Concealed Surfaces: Treat and clean, spray-apply one coat primer and baked enamel finish.

PART 3 - EXECUTION

3.1 PREPARATION

A. Provide templates and rough-in measurements.

3.2 INSTALLATION

A. Install accessories in accordance with manufacturer's printed instructions using fasteners appropriate to substrate.

B. Install true, plumb and level, securely and rigidly anchored to substrate.

C. Use tamper-proof, security type fasteners.

D. Adjust accessories for proper operation and verify mechanisms function smoothly.

E. Replace damaged and defective items.

F. Clean and polish exposed surfaces after removing temporary labels.

3.3 TOILET ACCESSORIES SCHEDULE

A. Refer to Drawings.

END OF SECTION

SECTION 10 44 00

FIRE EXTINGUISHER CABINETS

PART 1 - GENERAL

1.1 SUMMARY

A. Section Includes: Provide fire extinguisher cabinets with accessories as required for complete installation.

1. Fully Recessed: Provide flush mounted trimless fire extinguisher cabinets (no visible trim).

2. Semi-Recessed: Provide semi-recessed mounted fire extinguisher cabinets with exposed frame (trim); maximum 4” projection from finished wall surface.

3. Surface Mounted: Provide surface mounted fire extinguisher cabinets with exposed frame (trim) for garage and areas not in a path of travel.

4. Fire Extinguishers: Owner furnished and installed.

B. Related Sections:

1. Division 21: Fire protection systems.

1.2 SUBMITTALS

A. Product Data: Furnish manufacturer's literature.

PART 2 - PRODUCTS

2.1 SYSTEMS MANUFACTURERS

A. J.L. Industries.

B. Larsen’s Manufacturing Co.

C. Potter Roemer.

D. Substitutions: Refer to Section 01 25 00.

2.2 MATERIALS

A. Systems Description: Provide fire extinguisher cabinets with accessories.

1. Public Areas: Flush trimless fire extinguisher cabinets.
2. Back-of-House Areas: Semi-recessed exposed frame fire extinguisher cabinets.
3. Garage: Surface mounted exposed frame fire extinguisher cabinets.

B. Flush Trimless Fire Extinguisher Cabinets:

1. Type:

    a. J.L. Industries/Embassy Series.
    b. Larsen’s Mfg. Co./Occult Series.
    c. Potter Roemer/Dana Series.
    d. Substitutions: Refer to Section 01 25 00.

2. Cabinet Depth: Provide cabinets designed for space available in walls with fire extinguisher cabinets, and of sufficient depth to house 2A-10BC multi-purpose dry chemical type fire extinguisher.

3. Frame: Trimless with recessed door frame flush with finish wall.

4. Metal Gages: Manufacturer's standard for series specified.

5. Box: Provide manufacturer's standard box with white baked enamel interior finish and baked enamel exterior finish.

6. Doors: Steel, full flush metal panel, with break-glass or manufacturer’s standard similar secure access type panel; provide thermosetting primer compatible with finish specified in Section 09 90 00 – Painting and Coating.

7. Door Hardware: Manufacturer's standard for secured access fire extinguisher cabinets panel with inside latch and lock.

C. Fire Extinguisher Cabinets with Exposed Frame (Trim): Provide semi-recessed mounting unless otherwise indicated, with maximum 4” extension from face of wall, provide trim suitable for installation indicated.

1. Type:

    a. J.L. Industries/Ambassador Series.
    b. Larsen’s Mfg. Co./Architectural Series.
    c. Potter Roemer/Alta Series.
    d. Substitutions: Refer to Section 01 25 00.

2. Cabinet Depth: Provide cabinets designed for space available in walls with fire extinguisher cabinets, and of depth to house 2A-10BC multi-purpose dry chemical type fire extinguisher.

3. Food Preparation Areas: Provide cabinets designed to house K Type fire extinguisher at locations indicated on Drawings or designated as food preparation areas where burning grease could be encountered.

4. Hazardous Areas (Garage): Provide cabinets designed to house 4A-60BC multi-purpose dry chemical type fire extinguisher at locations indicated on Drawings or designated as hazardous.

5. Trim: Manufacturer's standard edge trim for specified models.

6. Metal Gages: Provide manufacturer's standard gages for cabinets specified.

7. Construction: Mitered and welded one-piece tubular door frames; weld joints and grind smooth; manufacturer's standard steel box with white baked enamel interior finish and primed exterior finish.

    a. Steel Doors and Trim: Manufacturer's standard, prime coat finished.
    b. Doors: Break-glass type secured access, with inside latch and lock.
    c. Door Hardware: Continuous hinge permitting door to open 180 degrees.

D. Surface Mounted Fire Extinguisher Cabinets:

1. Types:

    a. J.L. Industries/Ambassador Series.
    b. Larsen’s Mfg. Co./Architectural Series.
    c. Potter Roemer/Alta Series.
    d. Substitutions: Refer to Section 01 62 00.

2. Cabinet Depth (Typical): Provide cabinets designed for space available in walls with fire extinguisher cabinets, and of depth to house 2A-10BC multi-purpose dry chemical type fire extinguisher.

3. Type: Fully exposed, mounted directly to wall, with manufacturer’s standard rolled edge trim based on specified cabinets.

4. Metal Gages: Provide cabinets fabricated of minimum 18-gage throughout, 20-gage permitted for back.

5. Construction: One-piece tubular door frames mitered and welded; weld joints and grind smooth; manufacturer's standard steel box with white baked enamel interior finish and primed exterior finish.

    a. Steel Doors and Trim: Manufacturer's standard, prime coat finished.
    b. Doors: Break-glass or similar secured access panel, with inside latch and lock.
    c. Door Hardware: Continuous type hinge permitting door to open 180 degrees.

PART 3 - EXECUTION

3.1 EXAMINATION

A. Examine substrates and conditions under which fire extinguisher cabinets are to be installed.

B. Do not proceed with work until unsatisfactory conditions have been corrected.

3.2 INSTALLATION

A. Install cabinets in locations and at mounting height to comply with requirements of governing authorities; prepare recesses in walls as required.

B. Securely fasten to structure, square and plumb, in accordance with manufacturer's instructions.

1. Wherever exact location of units is not shown, locate as directed by Architect.

3.3 IDENTIFICATION

A. After installation and finishing is completed, silkscreen or apply decal letters spelling "FIRE EXTINGUISHER" as applicable.

B. Letter size, style and location as selected by Architect.

END OF SECTION

SECTION 10 51 00

SOLID PHENOLIC LOCKERS

Part 1 GENERAL

1.1 Summary

A. Section includes:
solid phenolic lockers
solid phenolic benches

B. Related Sections:

1.2 Submittals

A. Submittals: Comply with procedures and quantities as indicated in Division 1 Submittal Procedure Section.

B. Shop Drawings: Submit shop drawings indicating room sizes, layout, locker dimensions, material thickness, trim, hardware, finishes, locks, base, doors, accessories, and installation details.

C. Product Data: Submit manufacturer's technical data for materials, fabrication, finishing, fastenings, hardware, and installation details.

D. Samples: Submit samples of edge details, colors, patterns, finishes, and textures.

E. Closeout Documents: Submit the following:
1. Operation and Maintenance data
2. Warranty

1.3 Quality Assurance

A. Qualifications:
1. Fabricator shall have 10 years or more experience in fabrication of solid phenolic materials and shall be experienced in performing work of similar size and scope.
2. Fabricator shall be capable of providing field service representation.
3. Installer shall be approved by the manufacturer and be experienced in performing work of similar size and scope.

B. Pre Installation Meeting: Conduct pre-installation meeting prior to installation to verify project requirements and conditions.

1.4 Delivery, Storage and Handling

A. **Ordering:** Comply with supplier's ordering and lead-time guidelines to avoid delays.

B. **Delivery:** Deliver materials in the manufacturer's original protective packaging.

C. **Storage and Handling:** Store materials in an enclosed shelter providing protection from damage, temperature, humidity, and exposure to the elements.

1.5 Coordination and Project Conditions

A. **Field Measurements:** Before material fabrication, verify actual field measurements and show actual measurements on shop drawings.

B. **Coordination:** Coordinate field measurements with fabrication schedule construction progress to avoid construction delays.

1.6 Warranty

A. Submit executed copy of 10-year warranty against defects in material and 2 years warranty for system.

Part 2 – PRODUCTS

2.1 Manufacturers

A. **Basis of Design**: Spectrum Lockers; 885 Milner Ave. Toronto, Ontario M1B 5V8
Phone: 1-855-444-0588; spectrumlockers.com.
Locally Represented by**:**
MEGA ARCHITECTURAL**:** Address: 6861 Walker St, La Palma CA 90623, T: (310) 323-5828

a. Model: as indicated in plans, mixed sizes: 1-Tier, 2-Tier, 3-Tier, ,4-Tier, 5-Tier, 6-Tier, Z-Tier

B. Hollman

C. Foreman

D. Substitutions per division 01:

2.2 Materials (Basis of Design)

A. **Panel Material:**

1. Decorative papers impregnated with the melamine resin on faces with a clear protective overcoat and integrally compression molded within a core consisting of solid phenolic impregnated kraft papers.
2. Core or panel material shall meet fire resistance per ASTM E84 **, Class B**

B. Doors:

1. Material: 1/2” (13mm) thick solid phenolic composite material.
2. Corners: Rounded
3. Color: As selected from Trespa TopLab’s full color range, basis of design includes mix of colors: Brittany Blue, Dove Grey, Indigo.
4. Edges: Standard profile is straight edge no profile.
5. Door Fastening: Through Bolted.

C. Locker Bodies

1. Exposed edges: Straight profile; eased edges to remove sharpness; machine polished and free from tooling imperfections.
2. Tops, bottoms, and intermediate shelves: 1/2” (13mm) thick solid phenolic composite material with ventilation holes.
3. Locker backs: +/- 1/4” (6mm) thick solid composite material.
4. Locker Sides: 3/8” (10mm) thick solid phenolic composite material.
5. Made from Trespa Toplab Base, E0-00 White

D. Ancillary Panels: Finished end panels and closures shall be 1/2” (13mm) thick solid phenolic composite material.

E. Hardware

1. Hinges:
a. Material: 304-grade stainless steel.
b. Quantity: Three (3) for full height doors and two (2) for multi-tier units.

2. Interior hooks:
a. Material: Stainless steel.
b. Top Hook: Two prong: one per opening for 1, 2, and “Z” tiers.
c. Side Hook: Single prong: two per opening for 1, 2, and “Z” tiers.

3. Fasteners: Exposed fasteners, where present, shall be 304 stainless steel

4. Fastener Application: Apply directly into or through the material.

5. Other Reinforcement: Aluminum or metal profiles for reinforcements shall not be permitted.

6. Door Identification (identification plates): 1 1/2" stainless steel disk with laser engraved numbering, or visible on integrated hasp handle

F. Ventilation

1. Interior Vent: Provide six 3/8” (10mm) diameter ventilation holes on tops, bottoms, and intermediate shelves. Provide three 3/8” (10mm) diameter ventilation holes on “Z” type intermediary shelves.

G. Base

1. Base not furnished with Locker: (Curb mounted)

2.3 Size

A. **Overall Height:** 71-3/4" or as indicated.

B. **Overall Width:** Mix of widths: 12", 16", or 18" as indicated.

C. **Overall Depth:** 15"

2.4 Accessories and Options

A. **Locking System:** (Stainless Steel Hasp Plate and Bar with Integrated Handle) (Digilock Cue Nextlock) (Ojmar Standard Security Cam Key Lock) (Ojmar Coin Collect or Return).

B. **Locker Top:** Vertical Panel width ¼" (6mm) thick solid phenolic composite material, top of lockers to ceiling as indicted.

C. **Door Identification:**

1. Number Plates: (Identification plates to be stainless steel with laser engraved numbers and mounted into machined door pocket with permanent adhesive) (Identification laser engraved on integrated hasp handle).

2. Fonts to be a minimum 1/2" high and up to four alphanumeric characters

3. Numbering sequence to be provided by architect.

Part 3 – EXECUTION

3.1 **Examination:** Examine site conditions before locker installation. Notify architect of unacceptable areas. Do not install locker until unacceptable conditions have been corrected.

3.2 Installation

A. Install lockers in locations as shown on shop drawings per manufacturer's instructions.

B. Install lockers plumb, level, square, rigid, and flush.

C. Install all required trim, fillers, end panels, and closures per manufacturer's instructions.

D. Use hardware supplied or recommended by the manufacturer.

E. Attach number plates to doors as indicated on shop drawings.

F. Correct and/or replace damaged components as directed by architect.

3.3 Adjustment

A. Adjust doors and locks for smooth operation without binding.
B. Lubricate door hinges and locks per manufacturer's instructions.

3.4 Cleaning

A. Clean all surfaces in accordance with manufacturer's instructions.

B. Do not use abrasive cleaners.

End of Section

SECTION 11 10 00

MISCELLANEOUS EQUIPMENT

PART 1 - GENERAL

1.1 SUMMARY

A. Section Includes: Provide miscellaneous equipment with hardware and accessories as required for complete secure and operational installation as applicable.

1. Provide and install (3) microwaves.
2. Provide and install (2) refrigerators. Fridge shall be side by side or freezer on bottom type.
3. Provide and install (2) garbage disposals.
4. Provide and install monitor systems per client direction.
5. Provide and install (1) residential grade dishwasher.
6. Provide and install (1) ice maker.
7. Provide and install (1) dual coffee maker with hot water tap.
8. Provide and install (1) 36” range.
9. Provide and install (1) 42” range hood.
10. Provide and install (3) 48” wide 2-tier stainless steel, mobile, wire shelving units.
11. Provide and install (1) 24” stand up freezer.
12. Provide and install (1) 36” stand up refrigerator.

B. Related Sections:
1. Division 26: Electrical service.

1.2 SUBMITTALS

A. Product Data: Furnish manufacturer's literature.

B. Shop Drawings: Show complete details of equipment including dimensions and field measurements.

1.3 DELIVERY, STORAGE AND HANDLING

A. Deliver inserts and rough-in frames to jobsite at appropriate time for building in.

B. Do not deliver miscellaneous equipment to site until spaces in which they are to be installed are ready to receive them.

C. Pack miscellaneous equipment individually, protect each item and its finish.

1.4 SITE CONDITIONS

A. Protect adjacent or adjoining finished surfaces from damage during installation of work of this section.

B. Before starting work notify Architect in writing of conditions detrimental to installation or operation of units.

C. Verify with Architect exact location of miscellaneous equipment.

1.5 WARRANTY

D. Extended Correction Period: Repair or replace miscellaneous equipment which does not function as intended.

1. Period: Two years.

PART 2 - PRODUCTS

2.1 MATERIALS

A. System Description: Provide miscellaneous equipment with hardware and accessories as applicable.

B. Regulatory Requirements - Access for Persons with Disabilities: Comply with California Building Standards Code and Americans with Disabilities Act (ADA) Standards.

C. General: Provide standard materials and finishes for miscellaneous equipment listed; where more than one material or finish is available and not otherwise indicated provide as selected by Architect from manufacturer’s standard materials and finishes.

D. Attachments and Accessories: Provide for complete secure operational installation.

E. Microwave: Energy Star rated, General Electric, allow $300 each

F. Refrigerator: Energy Star rated, Kitchen Aid, allow $2,400 each

G. Garbage disposal: Energy Star rated, InSinkErator, allow $200 each

H. TV/monitor system: As stated in the bid addendum

I. Dishwasher: Energy star rated, Kitchen Aid, allow $1,700

J. Ice maker: Energy star rated, Manitowoc, allow $5,500

K. Coffee maker: Bunn BrewWIST Dual GPR DBC, allow $3,500

L. Range: Energy star rated, Kitchen Aid, allow $6,000

M. Range hood: Energy star rated, Kitchen Aid, allow $2,500

N. SS wire shelving: allow $200 each

O. 24” freezer: Energy star rated, True, allow $5,000

P. 36” refrigerator: Energy star rated, True, allow $4,500

PART 3 - EXECUTION

3.1 INSTALLATION

A. Install miscellaneous equipment in accordance with manufacturer's recommendations and installation instructions, level, true to line, and in correct relation to adjacent materials and finishes.

B. Coordinate electrical connections with Division 26.

C. Upon completion of installation, instruct Owner's personnel in operation and maintenance of electrical miscellaneous equipment.

END OF SECTION

SECTION 11 66 13

EXERCISE EQUIPMENT

PART 1 -GENERAL

1.1 DESCRIPTION

GENERAL SPECS:

STEEL STRUCTURE AND COMPONENTS

1. **Steel structure**: Carbon steel tubes with thickness of 3mm or 4mm and a standard of 35-8 or 45-8 (ASTM Grade B)

2. **Welding**: MIG welding with hollow coil feed.

3. **Screws**: All from 304 stainless steel. Anti-temper S-TORX head / special signature screws are used when necessary.

COATING SYSTEM

4. **Galvanization**: In accordance with ASTMB633-07 standard, electro galvanization provides surface rust protection and superior color adhesion.

5. **Coating**: DUPONT ALESTA AD Powder coating for architectural use. Made from carboxyl polyester and TIGC. Designed particularly for all the classic requirements of outdoor exposure: rain, fog, UV from sunlight and SO2-containing air. Film thickness: 60 to 70 microns.

COMPOSITES

6. **HDPE**: Backrests, armrests, seats are made with signature molds for HDPE. Raw material includes UV protection which retains its color for at least 2 years and allows easier maintenance with higher durability.

7. **PU-Polyurethane**: Backrests, armrests, seats are made with signature molds for Greenfields Professional Series. Raw material includes UV protection which retains its color for at least 2 years and allows easier maintenance with higher durability and comfort.

GREENFIELDS APP

8. **Greenfields App**: For both Android and Apple phones, offers the following features:
- Park locator within 30 mile radius
- QR Code Scanner – scan view info on each unit
- Instructional Videos - how-to videos for exercises available on each unit
- My Workout Routine – create your own workouts
- Progress – Workout History: keep track of your personal performance over time
- Progress – Weight Progress: keep track of your weight progress towards your goal
- Progress – Personal BMI: keep track of Body Mass Index progress toward your goal
- Coming soon: Exercises not requiring equipment

UNIT SELECTION FOR THIS PROJECT

GR2005-1-19 - 2-Person Incline Sit-Up Bench

- Pre-Galvanized tubes
- Cold Galvanized after fabrication
- Orange Peel DuPont Powder Coating with UV protection
- Greenfields' installation method - eliminates obstacles and trip hazards
- Modular HDPE boards offer low heat conductivity
- HDPE Sit-Up board overall size is 17.5" wide x 43" long (1.75" thick) and offers great support for users of all sizes
- Detailed User Instructions, including a QR Code featuring a "How To" video
- 10 Year Limited Warranty

GR2005-1-22 - 4-Pendulum Abs & Dips Station

- Pre-Galvanized tubes
- Cold Galvanized after fabrication
- Orange Peel DuPont Powder Coating with UV protection
- Greenfields' installation method eliminates obstacles and trip hazards
- Built-in SafeStop range limiter inside pendulum arm to protect user and equipment stops motion at 60 degrees.
- 2RS Sealed ball-bearings are used (not bushings) - with life cycle of 10,000 hours. (Bearings feature a rubber seal on both sides. RS provides a better seal but more rolling friction than 2Z bearings)
- Hand Grips use 3" diameter to prevent protrusion (3" large diameter, 6 inch long, 1.75" thick)
- Two Kick-Steps to allow easier user position of the leg/knee raises station (Abs)
- HDPE backrest offers low heat conductivity.
- HDPE arm rests offer low heat conductivity
- Detailed User Instructions, including a QR Code featuring "How To" video
- 10 Year Limited Warranty

SGR2005-1-42 - 2-Person Back & Arms Combo (unique to Greenfields)

- Pre-Galvanized tubes
- Cold Galvanized after fabrication
- Orange Peel DuPont Powder Coating with UV protection
- Greenfields' installation method eliminates obstacles and trip hazards
- 2RS Sealed ball-bearings are used (not bushings) - with life cycle of 10,000 hours. (Bearings feature a rubber seal on both sides. RS provides a better seal but more rolling friction than 2Z bearings)
- Hand Grips use 3" diameter to prevent protrusion (3" large diameter, 6 inch long, 1.75" thick)
- Ergonomic HDPE Backrest offers low heat conductivity, while providing better support
- HDPE Seats offer low heat conductivity
- Under-seat footrest for optimal leverage and injury prevention
- Detailed User Instructions, including a QR Code featuring "How To" video
- Separate Age Appropriate Sign mounted on the main post
- 10 Year Limited Warranty

SGR2005-1-48-W - 2-Person Wheelchair Accessible Lat Pull Down (unique to Greenfields)

- Pre-Galvanized tubes
- Cold Galvanized after fabrication
- Orange Peel DuPont Powder Coating with UV protection
- Greenfields' installation method eliminates obstacles and trip hazards
- Accessible Side supports a counter weight of 138 lbs.
- 2RS Sealed ball-bearings are used (not bushings) - with life cycle of 10,000 hours. (Bearings feature a rubber seal on both sides. RS provides a better seal but more rolling friction than 2Z bearings)
- Hand Grips use 3" diameter to prevent protrusion (3" large diameter, 6 inch long, 1.75" thick)
- Ergonomic HDPE Backrests offer low heat conductivity, while providing better support
- HDPE Seats offer low heat conductivity
- Under-seat footrest for optimal leverage and injury prevention
- Detailed User Instructions, including a QR Code featuring "How To" video
- Separate Age Appropriate Sign mounted on the main post
- Universal ADA Sign mounted on the main post
- 10 Year Limited Warranty
- **U.S. Patent 9,079,069 B1**

HP2009-5-03 - Single Elliptical Cross Trainer

- Pre-Galvanized tubes
- Cold Galvanized after fabrication
- Orange Peel DuPont Powder Coating with UV protection
- Greenfields' installation method eliminates obstacles and trip hazards
- 2RS Sealed ball-bearings are used (not bushings) - with life cycle of 10,000 hours. (Bearings feature a rubber seal on both sides. RS provides a better seal but more rolling friction than 2Z bearings)

- Hand Grips use 3" diameter to prevent protrusion (3" large diameter, 6 inch long, 1.75" thick)
- Ergonomic HDPE Footrests offer low heat conductivity, while providing better support
- Detailed User Instructions, including a QR Code featuring "How To" video on a standalone sign
- 10 Year Limited Warranty

UBX-292 – Cardio Stepper with Adjustable Resistance (unique to Greenfields)

- Pre-Galvanized tubes
- Cold Galvanized after fabrication
- Orange Peel DuPont Powder Coating with UV protection
- Greenfields' installation method eliminates obstacles and trip hazards
- Handles are made in signature molds from durable and a fire resistant EPDM soft rubber.
- Resistance mechanism consists of a Bi-Directional Hydraulic Piston with resistance of up to 100 lbs.
- Ergonomic HDPE footrests offer low heat conductivity, while providing better support
- Detailed User Instructions, including a QR Code featuring "How To" video
- Separate Age Appropriate Sign mounted on the main post
- 10 Year Limited Warranty

UBX-293 – Bench Press with Adjustable Resistance (unique to Greenfields)

- Pre-Galvanized tubes
- Cold Galvanized after fabrication
- Orange Peel DuPont Powder Coating with UV protection
- Greenfields' installation method eliminates obstacles and trip hazards
- Handles are made in signature molds, from durable and a fire resistant EPDM soft rubber.
- Resistance mechanism consists of a Bi-Directional Hydraulic Piston with resistance of up to 100 lbs.
- Customized PU-Polyurethane backrests offer great comfort while in use.
- Detailed User Instructions, including a QR Code featuring "How To" video.
- Separate Age Appropriate Sign mounted on the main post
- 10 Year Limited Warranty

SECTION 12 24 00

WINDOW SHADES

PART 1 - GENERAL

1.1 SUMMARY

A. Section Includes: Provide manual chain operated window shades with brackets and accessories as required for complete finished operational installation.

1. Solar Shades: Unframed.

1.2 REFERENCES

A. NFPA 701: Standard Methods of Fire Tests for Flame-Resistant Textiles and Films.

B. FS CCC-T-191b: Flame Retardancy of Textiles.

1.3 SUBMITTALS

A. Product Data: Furnish manufacturer's literature.

B. Shop Drawings: Show hardware, clearances and operation of shades with specified system.

1. Layout of openings, partings and pulley positions subject to Architect approval where not clearly indicated.

C. Samples: Submit samples of each fabric indicating finishing of top, bottom and sides, and section of frame indicating finish.

D. Certificate of Flame Proofing or Flame Resistance: Submit certification, recommendations and instructions for laundering of specified fabrics and maintenance of entire installation.

1.4 QUALITY ASSURANCE

A. Manufacturer Qualifications: Provide manual shades as complete units produced by one manufacturer, including hardware, accessory items, mounting brackets and fastenings.

1.5 DELIVERY, STORAGE, AND HANDLING

A. Do not deliver shades until building is ready for installation.

B. Number and identify shades as to locations in Project.

1.6 SITE CONDITIONS

A. Before installation, physically measure and inspect space after limiting conditions are established.

1. Note floor and ceiling may not be level.

PART 2 - PRODUCTS

2.1 SYSTEMS MANUFACTURERS

A. Mecho Shade Corporation/Mecho Shade System.

B. Lutron Electronics Co./Manual Shading.

C. SKYCO Shading Systems, Inc./Manual Shades.

D. Substitutions: Refer to Section 01 25 00.

2.2 MATERIALS

A. System Description: Provide manual chain operated window shades with brackets and accessories as required for complete finished operational installation.

B. Regulatory Requirements:

1. Flame Retardant Materials: Approved by California State Fire Marshal's Office.

2. Fire Resistant Fabrics: Required to have passed one of following:

a. NFPA 701.
b. FS CCC-T-191, test 5903.

C. Shade Operating System: Manual type chain operated roller shade system with adjustable slip clutch.

D. Fabric:

1. Solar Shades: Manufacturer's standard fire-resistant glass cloth fabric.

2. Colors: Where color is not indicated on Drawings or Finish Schedule, provide custom color as directed by Architect.

E. Accessories: Provide accessories, brackets, fittings and fastenings as necessary for proper operation and installation of shades; conceal fasteners or finish flush, painted to match exposed metal finish.

F. Colors: Where color is not indicated on Drawings or Finish Schedule, provide custom color as directed by Architect.

2.3 FABRICATION

A. Center Seams: Use single widths of fabric with no center seams for each shade.

B. Shade Mounting System: Allow for shade removal and replacement without disassembling hardware assembly.

C. Operating System: Provide upper and lower stop limits to prevent over-winding and unrolling.

1. Provide for left or right-hand operation.

PART 3 - EXECUTION

3.1 EXAMINATION

A. Inspect site conditions prior to installation for conditions that could affect proper installation and operation of shades.

B. Beginning installation signifies acceptance of substrates and conditions.

3.2 INSTALLATION

A. Install shades in accordance with manufacturer's recommendations and installation instructions.

1. Install shades level, plumb, secure, and at proper height; cooperate with other trades for securing shades to substrate and finished surfaces.

2. Mount solar shades and blackout shades as indicated on Drawings to allow shade cloths to be adjacent.

B. Hang shades to be straight and even, employing hand sewing of seams and hems as necessary for carefully matched installation with even, horizontal top and bottom hems, and quiet, smoothly operating system.

C. Fabricate and install shades so when open, closed or while operating shades will not be abraded by window frame, ceiling or sill.

3.3 ADJUSTING

A. Thirty days after hanging of shades, inspect installation for fabric shrinkage or expansion or other variations and rehang as necessary for conformance to specified tolerances.

END OF SECTION

SECTION 12 93 00

SITE FURNISHINGS

PART 1 -GENERAL

1.1 DESCRIPTION

All labor, materials equipment necessary for and incidental to performing all operations of work for this Section, complete as shown on the Plans or specified herein. Work includes, but is not necessarily limited to, the following:

A. Picnic Tables

B. Accessible Picnic Table

C. Round Tables with Seating

D. Bench Seating

E. Waste / Recycling Receptacles

F. Drinking Fountain

G. Precast Concrete Pots

1.2 RELATED WORK SPECIFIED ELSEWHERE

A. Section 32 13 13 Concrete Paving

1.3 GENERAL REQUIREMENTS

A. General

Examine Plans and Specifications and include all miscellaneous metal, which is specified in other Sections. Provide all connections, anchors, bolts, and other fastenings as required. Perform all cutting, punching, drilling, and tapping required for proper assembly of the work. All installations shall be done in accordance to manufacturer’s specifications.

B. Shop Drawings

Submit shop drawings of all work herein showing layouts, sizes, and methods of construction and installation, including sizes and types of all fastening devices.

C. Codes

Materials and work shall conform to the governing Building Code. In case of conflict between these Specifications and the Building Code, the more stringent shall govern.

D. Delivery

Ensure that items to be set in concrete or in play areas are delivered at the proper time.

E. Measurements

Verify all dimensions by taking field measurements. Proper fit and attachment of all items is required.

F. Coordination

Coordinate with other trades to effect prompt delivery of all materials needed for erection or installation. Identify all bolts or other loose materials.

G. Storage

Store materials in dry, protected areas. Protect from rusting, bleaching, and other damage. Remove any damaged items from site and replace at no cost to the City.

H. Certifications

Furnish to the City's representative copies of all material certifications.

I. Trade Names or Equals

Approval of equipment and materials offered as equivalents to those specified will be as set forth under Section 4, paragraph 4-1.6 of the Standard Specifications.

J. Submit 6″ x 6″ color and finish sample for each site furnishing specified, except where noted under item B.

PART 2 -PRODUCTS

2.1 Tables

A. Picnic tables shall be '525 Table', Model No. 525-60TX; by Dumor. Tel: (818) 735-3838. Surface mount with tamper-resistant fasteners. Picnic tables shall be Antique Mahogany (Wood grain recycled plastic) and Textured Gray (Powder coated metal components) in color.

B. Accessible picnic tables shall be '525 ADA Table', Model No. 525-633TX; by Dumor. Tel: (818) 735-3838. Surface mount with tamper-resistant fasteners.

Picnic tables shall be Antique Mahogany (Wood grain recycled plastic) and Textured Gray (Powder coated metal components) in color.

C. Round tables with seating shall be ‘42” Dia. Steel Table with 3 Seats’, Model No. 296-42-30TX/S2 by Dumor. Tel: (818) 735-3838. Surface mount with tamper-resistant fasteners. Picnic tables shall be Antique Mahogany (Wood grain recycled plastic) and Textured Gray (Powder coated metal components) in color.

2.2 Benches

A. Bench seating shall be ‘6’ Backless Bench’, Model No. 523-60TX by Dumor. Tel: (818) 735-3838. Surface mount with tamper-resistant fasteners. Picnic tables shall be Antique Mahogany (Wood grain recycled plastic) and Textured Gray (Powder coated metal components) in color.

2.3 Waste / Recycling Receptacles

A. Waste receptacle shall be ‘32 Gallon Waste Receptacle with Liner Shield’, Model No. 287-32SH-SO; provide with Textured Gray ‘SO’ lid option, ‘SO’ hole shape option by Dumor. Tel: (818) 735-3838. Surface mount with tamper-resistant fasteners. Receptacles shall be Textured Gray (Powder coated metal components) in color.

B. Recycling receptacle shall be ‘32 Gallon Mixed Recycling Receptacle with Liner Shield’, Model No. 287-32SH-RC0002; provide with Textured Gray ‘RC2’ lid option, ‘RC2’ hole shape option by Dumor. Tel: (818) 735-3838. Surface mount with tamper-resistant fasteners. Receptacles shall be Textured Gray (Powder coated metal components) in color.

2.4 Drinking Fountain

A. Drinking fountain shall be ‘ADA Accessible Hi-Lo Filtered Stainless Steel Drinking Fountain with Bottle Filler, Non-Refrigerated’ Model No. 3612F by Haws. Tel: (909) 594-7088. Surface mount with tamper-resistant fasteners. Drinking fountain shall be Stainless Steel with Silver Powder Coat in color.

2.5 Precast Concrete Pots

A. Drinking fountain shall be ‘30” Square Wedge Pot’, Model No. QS-WE3037P by QCP Corp. Tel: (951) 256-3221. Precast concrete pots shall be French Gray in color with Craftmans Etch finish.

PART 3 - EXECUTION

3.1 SURFACE CONDITIONS

A. Prior to work of this Section, carefully inspect previously installed work. Verify all such work is complete to the point where this installation may properly commence.

B. Verify that work of this Section may be installed in strict accordance with the original design, all pertinent codes and regulations, and all pertinent portions of the referenced standards.

C. In the event of discrepancy, immediately notify the Engineer.

D. Do not proceed with installation in areas of discrepancy until all such discrepancies have been fully resolved.

3.2 INSTALLATION

A. Dimensions upon which Work of this Section may be contingent are to be verified by the Contractor at the work site to ensure proper placement and fit of equipment in the allotted areas.

B. Set and install site furnishings plumb, level, and true to line with a neat and finished appearance and in accordance with approved submittal and manufacturer's printed instructions.

END OF SECTION

SECTION 13 10 10

POOL CONCRETE

PART 1 - GENERAL

1.1 RELATED DOCUMENTS

A. Drawings and general provisions of the Contract, including General and Supplementary Conditions and Division 1 Specification Sections, apply to this Section.

1.2 SUMMARY

A. Section includes formwork, reinforcement, accessories, cast-in place concrete, finishing and curing for swimming pool floor.

B. Concrete work shall conform to ACI 301 except as modified below.

1.3 SUBMITTALS

A. Product Data: Submit for admixtures, reinforcing steel, epoxy, non-shrink grout, and waterstops.

B. Design Data: Submit concrete mix design.

1.4 QUALITY ASSURANCE

A. Construct and erect concrete formwork in accordance with ACI 301 and 347.

B. Perform concrete reinforcing work in accordance with ACI 301, ACI 318, and Manual of Practice.

C. Perform cast-in-place concrete work in accordance with ACI 301.

PART 2 - PRODUCTS

2.1 FORM MATERIALS AND ACCESSORIES

A. Form Materials: At the discretion of the Contractor.

B. Plywood: PS 1, MDO, Douglas Fir species; Structural 1 grade; sound undamaged sheets with clean true edges.

C. Lumber: Douglas Fir species; #1 grade.

D. Form Ties: Snap-off, glass fiber type of fixed length, or cone type.

E. Form Release Agent: Colorless mineral oil which will not stain concrete or impair natural bonding characteristics of coating intended for use on concrete.

F. Formed Construction Joints for Slab-on-Grade as shown on drawings.

2.2 REINFORCEMENT MATERIALS

A. Reinforcing Steel: ASTM A615, 40ksi yield grade for #3 and 60 ksi yield grade for #4 and larger; deformed billet steel bars, plain finish.

B. Chairs, Bolsters, Bar Supports, Spacers: Sized and shaped for support of reinforcing.

C. Fabricate concrete reinforcing in accordance with ACI 315.

2.3 CONCRETE MATERIALS

A. Cement: ASTM C150, Type II, Normal, Portland type.

B. Fine and Coarse Aggregates: Use 1 inch coarse aggregate conforming to ASTM C-33 Size #5 and comply with Title 24, Section 1903A.3.

C. Water: Clean and not detrimental to concrete.

D. Air Entrainment Admixture: ASTM C260.

2.4 CONCRETE MIX

A. Mix and deliver concrete in accordance with ASTM C94.

B. Provide concrete with 4,000 psi compressive strength with a maximum slump of 4 inches for all flatwork.

C. Select mix design proportions for normal weight concrete in accordance with Title 24, Section 1905.2.

2.5 COMPOUNDS, HARDENERS AND SEALERS

A. Curing Compounds: ASTM C309.

B. Absorptive Mats: ASTM C171.

C. Sealers: Clear, non-yellowing, penetrating sealer; Aqua Mix, Inc., Sealer’s Choice, or approved equal.

2.6 EPOXY

A. Cartridge type two-component 100% solids epoxy based system dispensed and mixed through a static mixing nozzle supplied by the manufacturer and meeting requirements of ASTM C-881 Type I and IV with 14,830 psi minimum compressive strength. The epoxy shall be tested for use in cracked and uncracked concrete per ICC-ES AC308.

B. Model SET-XP manufactured by Simpson Strong -Tie.

2.7 NON-SHRINK GROUT REPAIR MORTAR

A. Premixed compound consisting of non-metallic aggregate, cement, water reducing and plasticizing agents with minimum compressive strength of 9,000 psi at 28 days and suitable for concrete repair applications from featheredge to 4 inch depth.

B. Model Rapid Set Cement All manufactured by CTS Cement Manufacturing.

PART 3 - EXECUTIONS

3.1 FORMWORK ERECTION

A. Erect formwork, shoring and bracing to achieve design requirements.

B. Provide bracing to ensure stability of formwork.

C. Apply form release agent to formwork prior to placing form accessories and reinforcement.

D. Do not apply form release agent where concrete surfaces will receive special finishes or applied coverings which are affected by agent.

E. Clean forms as erection proceeds, to remove foreign matter.

3.2 INSERTS, EMBEDDED COMPONENTS, AND OPENINGS

A. Provide formed openings where required for work to be embedded in and passing through concrete members.

B. Coordinate work of other sections in forming and setting openings, slots, recesses, chases, sleeves, bolts, anchors, and other inserts.

C. Install concrete accessories straight, level, and plumb.

3.3 REINFORCEMENT PLACEMENT

A. Place reinforcement, supported and secured against displacement.

B. Ensure reinforcing is clean, free of loose scale, dirt, or other foreign coatings.

3.4 PLACING CONCRETE

A. Prepare previously placed concrete as indicated.

B. Do not break or interrupt successive pours such that cold joints occur

3.5 FORM REMOVAL

A. Do not remove forms or bracing until concrete has gained sufficient strength to carry its own weight and imposed loads.

B. Remove formwork progressively and in accordance with code requirements.

3.6 FLOOR FINISHING

A. Finish concrete floor surfaces in accordance with ACI 301 and ACI 302.

B. Uniformly spread, screed, and float concrete.

C. Provide straight coarse broom finish on pool floor slabs.

D. Maintain surface flatness, with maximum variation of 1/8 inch in 10 feet.

E. In areas with drains, maintain floor level at walls and slope surfaces uniformly to drains.

3.7 CURING

A. Apply curing compounds on floor surfaces.

B. Immediately after placement, protect concrete from premature drying.

C. Maintain concrete with minimal moisture loss at relatively constant temperature for period necessary for hydration of cement and hardening of concrete for not less than 7 days.

3.8 FIELD QUALITY CONTROL

A. Three (3) Concrete Test Cylinders: Taken for 50 cubic yards of each class of concrete placed

B. One (1) Slump Test: Taken for each set of test cylinders taken.

3.9 DEFECTIVE CONCRETE

A. Modify or replace concrete not conforming to required lines, details and elevations, as directed by Engineer.

END OF SECTION

SECTION 13 10 11

POOL SHOTCRETE

PART 1 - GENERAL

1.1 RELATED DOCUMENTS

A. Drawings and general provisions of the Contract, including General and Supplementary Conditions and Division 1 Specification Sections, apply to this Section.

1.2 SUMMARY

A. Section includes supply and installation of wet mix pneumatically applied concrete, formwork, reinforcement, accessories, finishing, and curing for swimming pool wall structure.

B. Concrete work shall conform to ACI 301 except as modified below.

1.3 SUBMITTALS

A. Product Data: Submit for reinforcing steel.

B. Design Data: Submit concrete mix design and provide shotcrete trip tickets.

1.4 QUALITY ASSURANCE

A. Perform Work in accordance with Title 24, Section 1908A of the California Building Code and ACI (American Concrete Institute) 506.2 unless specified otherwise in this Section.

B. Construct and erect concrete formwork and concrete reinforcing work in accordance with ACI 301, unless specified otherwise in this Section.

C. Prior to start of work, Owner's Testing Laboratory will verify mix proportions, gradation, and quality of aggregate.

D. Test Panels: Contractor shall provide 1 test panel fabricated by placing shotcrete onto plywood for each mix design being considered, for each shooting position to be encountered, and for each 5000 square feet of placed shotcrete. Panels shall be of identical thickness, reinforcement, and reinforcement placement as required for Work.

E. Core samples shall be tested for strength, water absorption, and drying and shrinkage.

1.5 ENVIRONMENTAL REQUIREMENTS

A. Ensure materials and surrounding air temperature are a minimum 50 degrees Fahrenheit prior to, during, and 7 days after completion of work.

B. During freezing or near freezing weather, provide equipment and cover to maintain minimum 50 degrees Fahrenheit and to protect work completed or work in progress.

C. Suspend shotcrete operations during high winds, rainy weather, or near freezing temperatures when work cannot be protected.

1.6 FIELD MEASUREMENTS

A. Verify that field measurements are as indicated.

PART 2 - PRODUCTS

2.1 EQUIPMENT

A. Mixing Equipment: Capable of thoroughly mixing aggregate, cement, and water in sufficient quantity to maintain continuous placement.

B. Air Supply: Clean, dry air adequate for maintaining sufficient nozzle velocity, uniformly steady for work while simultaneously operating blow pipe for cleaning away rebound.

C. Delivery Equipment: Capable of discharging aggregate-cement-water mixture accurately, uniformly, and continuously.

2.2 FORM MATERIALS AND ACCESSORIES

A. Form Materials: At the discretion of the Contractor.

B. Plywood: PS 1-83, Group I, Exterior Grade B-B, minimum 5 ply, and 5/8 inch thick, grade marked, and not mill oiled.

C. Lumber: Douglas Fir species; #1 grade.

D. Form Ties: Prefabricated rod, flat band, wire, internally threaded disconnected type, and not leaving metal within 1-1/2 inches of shotcrete surface.

E. Form Release Agent: Colorless mineral oil which will not stain shotcrete.

2.3 REINFORCEMENT MATERIALS

A. Reinforcing Steel: ASTM A615, 40ksi yield grade for #3 and 60 ksi yield grade for #4 and larger; deformed billet steel bars, plain finish.

B. Chairs, Bolsters, Bar Supports, Spacers: Sized and shaped for support of reinforcing.

C. Fabricate concrete reinforcing in accordance with ACI 315.

2.4 SHOTRETE MATERIALS

A. Cement: ASTM C150, Type II, Normal, Portland type.

B. Coarse Aggregates: Conforming to ASTM C-33.

C. Water: Clean and not detrimental to concrete.

2.5 CONCRETE MIX

A. Mix and deliver concrete in accordance with ASTM C94.

B. Provide shotcrete with 4,000 psi compressive strength with a minimum slump of 1 ½ inches maximum slump of 2 ½ inches.

C. Thoroughly mix shotcrete. Place mix within 45 minutes of mixing.

D. Develop mix design to give good compaction and low percentage of rebound, but stiff enough not to sag.

E. Maintain quality control records during production of shotcrete. Make records available to Owner's Testing Laboratory.

PART 3 - EXECUTIONS

3.1 EXAMINATION

A. Verify that field conditions are acceptable and are ready to receive work.

B. Verify field measurements are as indicated.

C. Verify fabricated forms are true to line and dimension, adequately braced against vibration, and constructed to permit escape of air and rebound during gunning operations.

D. Ensure correct placement of reinforcement. Ensure sufficient clearance around reinforcement to permit complete encasement.

E. Ensure easy access to shotcrete surfaces for screeding and finishing, to permit uninterrupted application.

3.2 ALLIGNMENT CONTROL

A. Provide alignment wires to establish thickness and plane of required surfaces.

B. Install alignment wires at corners and offsets not established by forms.

C. Tighten alignment wires true to line. Position adjustment devices to permit additional tightening.

3.3 FORMWORK ERECTION

A. Erect formwork, shoring and bracing to achieve design requirements.

B. Provide bracing to ensure stability of formwork.

C. Apply form release agent to formwork prior to placing form accessories and reinforcement.

D. Do not apply form release agent where concrete surfaces will receive special finishes or applied coverings which are affected by agent.

E. Clean forms as erection proceeds, to remove foreign matter.

3.4 INSERTS, EMBEDDED COMPONENTS, AND OPENINGS

A. Provide formed openings where required for work to be embedded in and passing through concrete members.

B. Coordinate work of other sections in forming and setting openings, slots, recesses, chases, sleeves, bolts, anchors, and other inserts.

C. Install concrete accessories straight, level, and plumb.

3.5 REINFORCEMENT PLACEMENT

A. Place reinforcement, supported and secured against displacement.

B. Ensure reinforcing is clean, free of loose scale, dirt, or other foreign coatings.

3.6 PLACING SHOTCRETE

A. Do not place shotcrete on any surface that is frozen, spongy, or where there is free water.

B. Apply shotcrete not to sag.

C. Direct nozzle perpendicular to surface to ensure maximum compaction with minimum rebound.

D. Build up thickness by layers, in multiple passes of the nozzle over the work area. Cover reinforcement with the first layer.

E. Allow each layer to take initial set before applying succeeding layers.

F. After initial set of final layer, remove excess material outside of forms and alignment lines.

G. Clean with air-water jet to remove laitance.

H. Sound work with hammer for voids. Expose voids and replace with new shotcrete.

I. Remove trapped rebound at construction and expansion joints.

J. Remove rebound material which does not fall clear of work. Discard rebound.

K. Finish surface of final layer with rough finish for mechanical bond at plaster areas and trowel finish in gutter.

L. Maintain surfaces wet for minimum of 7 days.

3.7 FORM REMOVAL

A. Do not remove forms or bracing until concrete has gained sufficient strength to carry its own weight and imposed loads.

B. Remove formwork progressively and in accordance with code requirements.

3.8 PROTECTION OF FINISHED WORK

A. Immediately after placement, protect shotcrete from premature drying, excessively hot or cold temperatures, and mechanical injury.

B. Maintain shotcrete with minimal moisture loss at relatively constant temperature for period necessary for hydration of cement and hardening of shotcrete.

END OF SECTION

SECTION 13 11 13

POOL FINISHES AND WATERPROOFING

PART 1 - GENERAL

1.1 RELATED DOCUMENTS

A. Drawings and general provisions of the Contract, including General and Supplementary Conditions and Division 1 Specification Sections, apply to this Section.

1.2 SUMMARY

A. Section includes pool gutter and surge chamber fluid applied waterproofing, pool plaster, and pool tile.

1.3 SUBMITTALS

A. Product Data: Submit for all products listed in this Section

B. Design Data: Submit plaster mix design.

C. Samples: Submit for each type, size, and color of tile listed.

D. Manufacturer's Installation Instructions: Submit for pool plaster and fluid applied waterproofing.

1.4 QUALITY ASSURANCE

A. Perform Work in accordance with TCA (Tile Council of America) Handbook and ANSI (American National Standards Institute) A108 Series/A118 Series.

1.5 EXTENDED WARRANTY

A. Provide 5-year warranty for pool plaster finish.

PART 2 - PRODUCTS

2.1 GUTTER, MAIN DRAIN BASIN AND SURGE CHAMBER FLUID APPLIED WATERPROOFING

A. Cementitious crystalline waterproofing coating designed for concrete substrates with a blend of portland cement, fine treated silica sand and active chemicals. The active chemicals shall generate a non-soluble crystalline formation of dendritic fibers within the concrete to seal against water penetration. Coating shall be resistant to pool chemicals and certified to meet NSF (National Sanitation Foundation) Standard 61 for use with potable water.

B. Xypex Concentrate manufactured by Xypex Chemical Corporation.

2.2 POOL PLASTER

A. Factory blended quartz aggregate with fortified white cement, additives, and field mixed in accordance with manufacturer's instructions.

B. Pebble Sheen Arctic White manufactured by Pebble Technology International.

2.3 POOL TILE

A. Porcelain body, square edges, 0 to 0.5 percent moisture absorption, and conforming to ANSI/TCA A137.1. Surface finish, size, and color as scheduled.

B. Ceramic body, square edges, 0.5 to 3.0 percent moisture absorption, and conforming to ANSI/TCA A137.1. Surface finish, size, and color as scheduled

C. Mortar: ANSI/ACI (American Concrete Institute) A118.1; Portland cement, sand, and water.

D. Grout: Cementitious type, resistant to shrinking.

2.4 POOL TILE SCHEDULE

A. Tile colors listed in this schedule are from the following manufacturers:
   1. Dal-Tile Corporation (DT).
   2. Inlays, Inc. (II).

B. Pool Deck:
   1. Deck Depth Markers - Unglazed porcelain, 6 x 6 inch, white background with black 4-inch-high text and factory skid-resistant surface (II #C6200xx FT and #6205xx IN Series).
   2. No Diving Graphic - Unglazed porcelain, 6 x 6 inch, white background with red international "no diving" graphic, black text and factory skid-resistant surface (II #C621500 Custom MG Series).
   3. Rim Flow Gutter - Unglazed ceramic, 2 x 2 inch, C701 trim, and Waterfall (DT #D169) and Galaxy (DT #D023) color.
   4. Rim Flow Gutter Cap - Unglazed ceramic, 2 x 1 inch, C701 trim, and Galaxy (DT #D023) color.
   5. Rim Flow Gutter Cap Turn Target - Unglazed ceramic, 2 x 1 inch, C701 trim, and Black (DT #D311) color.

C. Pool Interior
   1. Floor Inlet - Unglazed ceramic, 2 x 2 inch, and White (DT #D617) color
   2. Lane Marker - Unglazed ceramic, 2 x 2 inch, and Black (DT #D311) color.
   3. Pool Step - Unglazed ceramic, 2 x 2 inch, and White (DT #D617) color.
   4. Slope Break - Unglazed ceramic, 2 x 2 inch, and Red (DT #D017) color.
   5. Step Edge - Unglazed ceramic, 2 x 2 inch with 2 x 1 inch cap, and Black (DT #D311) color.
   6. Turn Target - Unglazed ceramic, 2 x 2 inch, and Black (DT #D311) color.

7. Waterline - Glazed ceramic, 6 x 6 inch, and Electric Blue (DT #1194) color.
8. Waterline Depth Markers - Glazed porcelain, 6 x 6 inch, white background with black 4-inch-high text and smooth surface (II #C6100xx FT and #6105xx IN Series).

PART 3 - EXECUTIONS

3.1 INSTALLATION OF FLUID APPLIED WATERPROOFING

A. Verify surfaces are solid, free of dirt, paint, loose particles, cracks, pits, rough projections, and foreign matter detrimental to adhesion and application of waterproofing.

B. Do not apply waterproofing to dirty, dusty, or surfaces unacceptable to manufacturer.

C. Verify items which penetrate surfaces to receive waterproofing are securely installed.

D. Beginning of installation means acceptance of substrate.

E. Clean, prepare and dampen surfaces to receive waterproofing, in accordance with manufacturer's instructions.

F. Apply two coats of waterproofing in accordance with manufacturer's instructions.

G. Cure final application in accordance with manufacturer's instructions.

3.2 INSTALLATION OF POOL PLASTER

A. Verify that surfaces and site conditions are ready to receive work.

B. Beginning of installation means acceptance of existing conditions.

C. Protect surfaces near work from damage or disfiguration.

D. Clean concrete/shotcrete surfaces of loose and foreign matter using a 2,500 psi high pressure/velocity water jet spray. Wash surfaces with clean water.

E. Dampen concrete/shotcrete surfaces with clean water immediately prior to plastering.

F. Apply plaster in accordance with manufacturer’s instructions and ANSI/ASTM C926.

G. Apply to surfaces for a total minimum thickness of 1/2 inch.

H. Provide smooth and consistent steel trowel finish.

I. After manufacturer’s specified curing period, plaster shall be washed and detailed with an acid solution to remove excess residue. Fill swimming pool from the deep end and protect plaster from erosion caused by filling with water and marring from hoses.

J. Maximum variation from flatness shall be 1/8 inch in 10 feet.

3.3 INSTALLATION OF POOL TILE

A. Verify that surfaces are ready to receive work.

B. Beginning of installation means installer accepts condition of existing surfaces.

C. Protect surrounding work from damage or disfiguration.

D. Vacuum clean existing surfaces and damp clean.

E. Seal substrate surface cracks with filler.

F. Install mortar bed, tile, and grout in accordance with manufacturer's instructions.

G. Apply mortar bed over concrete surfaces to a minimum thickness of 1/4 inch.

H. Lay tile to pattern indicated.

I. Lay tile so upper surface is flush with adjacent finishes.

J. Use trim finishes as indicated at corners.

K. Place tile joints uniform in width, subject to variance in tolerance allowed in tile size. Make joints watertight without voids, cracks, excess mortar, or excess grout. Smooth all cut edges.

L. Sound tile after setting. Replace hollow sounding units.

M. Allow tile to set for a minimum of 48 hours prior to grouting.

N. Grout tile joints.

END OF SECTION

SECTION 13 11 14

POOL DECK EQUIPMENT

PART 1 - GENERAL

1.1 RELATED DOCUMENTS

A. Drawings and general provisions of the Contract, including General and Supplementary Conditions and Division 1 Specification Sections, apply to this Section.

1.2 SUMMARY

A. Section includes pool deck equipment, safety equipment, and signs.

1.3 SUBMITTALS

A. Product Data: Submit for all products listed in this Section.

B. Operation and Maintenance Instructions: Submit for all competitive equipment, disabled access lift, lifeguard chairs, pool cover, pool vacuum, underwater lights, and water test kit.

PART 2 - PRODUCTS

2.1 3/4-METER DIVING STAND, ANCHOR AND BOARD

A. Stand: Type 304 polished stainless steel support pedestal 8 x 8 x 3/16 inch set at 15 degrees with 1/4 inch top plate and bottom plates. Fulcrum support tubes shall be 1.90 O.D. x 0.145 inch wall thickness 304 stainless steel with rubber pad. Provide 1.90 O.D. x 0.109 inch wall thickness 304 stainless steel handrails and ladder with 19 x 4 inch non-slip cycolac steps.

B. Anchor: 16 x 16 inch stainless steel pedestal cage anchor and two bronze ladder anchors.

C. Board: One piece aluminum springboard with I-beam construction, 12 feet x 18 inches, sealed end construction, and 0.2 inches minimum wall thickness. White latex and sand mixture coating top surface.

D. Model Sportflyte #13517 and #26203 manufactured by Paragon Aquatics. Provide custom pedestal and ladder height for rim flow pool.

2.2 BACKSTROKE PENNANT

A. Assembly consisting of 12 by 18 inch vinyl coated nylon triangular pennants strung on a 3/16 inch diameter vinyl coated stainless steel cable with brass swivel hook at one end and ratchet take-up reel at the other end.

B. Provide 2 in 64 foot length. Colors shall be alternating red and yellow.

C. Provide 2 ratchet wrenches.

D. Model "Champion" manufactured by Champion Aquatics.

2.3 BACKSTROKE STANCHION POST

A. Type 304 polished and buffed stainless steel tubing with 1.9 inch outside diameter by 0.145 inch wall thickness, stainless steel cap with eyebolt on the upper end, and an overall height of 8 feet.

B. Provide 4.

C. Model #38106 manufactured by Paragon Aquatics or model #10168 manufactured by SR Smith.

2.4 DISABLED ACCESS LIFT

A. Lift: Assembly shall have powder coated stainless steel and aluminum construction, 24 volt rechargeable battery pack, plastic seat with seat belt, 344 degrees total rotation, and a 300 pound lifting capacity. Supply with foot rest, 2 rotating arm rests, caddie, stainless steel anchor socket with cover, and spanner key. Lift shall accommodate anchor set back of 33 inches from pool wall and comply with all requirements of CBC 11B-1009.2.

B. Provide 1.

C. Model #390-2000 “Splash Extended Reach” manufactured by SR Smith.

2.5 GRAB RAIL

A. Type 304 polished and buffed stainless steel tubing with 1.9 inch outside diameter by 0.109 inch wall thickness. Tubing shall have smooth wrinkle free bends and have a "figure 4" bend.

B. Model #30212 manufactured by Paragon Aquatics or #10173 manufactured by SR Smith.

2.6 GUTTER GRATE

A. Parallel modular interlocking PVC grating 12 inches wide constructed of molded bars 0.625 inch wide with 1 inch depth spaced with 0.375 inch openings. Grating shall have cross bars spaced 3 inches on center and diamond ridged anti-skid top surface. PVC shall be UV stabilized and white color. Provide recessed stainless steel hold down clips with stainless steel anchor screws for 36 inch maximum anchor spacing on each side of grating.

B. Model “Quiet-flow” manufactured by Lawson Aquatics.

2.7 LIFEGUARD CHAIR - PORTABLE TALL

A. Assembly shall have bolted frame fabricated from 1.9 inch outside diameter by 0.065 inch wall thickness type 304 polished and buffed stainless steel tubing, a fiberglass platform, molded plastic seat mounted 6 feet above deck level and capable of

swiveling 360 degrees, molded cycolac ladder steps, 2 solid rubber wheels, and attachments for life ring and umbrella.

B. Provide 1.

C. Model #20302 manufactured by Paragon Aquatics or model #US48500 manufactured by SR Smith

2.8 LIFEGUARD CHAIR - PORTABLE SHORT

A. Assembly shall have welded frame fabricated from 1.9 inch outside diameter by 0.065 inch wall thickness type 304 polished and buffed stainless steel tubing, a 34 inch square fiberglass platform, fiberglass seat mounted 2.5 feet above deck level and capable of swiveling 360 degrees, and attachments for life ring and umbrella.

B. Provide 1.

C. Model #20350 manufactured by Paragon Aquatics or model #LPLS-330 manufactured by SR Smith.

2.9 POOL COVER AND STORAGE REEL

A. Pool Cover: Laminated cover with center layer of 2 pound per square foot 0.125 inch thick cross-linked polyethylene foam and outer layers of ultra-violet stabilized woven polyethylene with weave density of 12 by 10 per square inch. Edges shall be weighted with wrapped ethylene interpolymer alloy and non-corrosive grommets shall be reinforced with additional PVC plate. Cover shall have double needle lock-stitch seams, burst strength of 500 pounds per square inch, tensile strength of 371 pounds, insulating R value of 0.5 BTU per hour per square foot per degrees Fahrenheit per inch. Cover shall have a 7 year warranty.

B. Panel Configuration: 4 panels of 14.75 x 75 feet and 3 panels of 15 x 55, and 1 panel of 12 x 10 feet to cover entire pool surface. Provide cut-out in panel for stair rail.

C. Storage Reel: Assembly shall have frame fabricated from stainless steel tubing, stainless steel winding tube with sealed ball bearings at each end, polyurethane wheels, and screw jacks. Provide storage reel cover constructed from vinyl laminated fabric.

D. Reel Configuration: Provide 1 reels with (2) 17 foot long tubes and 1 reel with (1) 17 foot long tube.

E. Model EnergySaver XER manufactured by SR Smith.

2.10 POOL VACUUM

A. Submersible automatic pool vacuum consisting of self contained reusable 2 micron filter bags, high speed drive motor, 2 pump motors, 45 meter cord, molded cleaning brushes, foam cleaning brushes, remote control system, and zero depth sensor. Vacuum shall be 810 mm wide and have a water filter capacity of 38 cubic meters per hour. Provide storage cart.

B. Provide 1.

C. Model Ultramax manufactured by Aquabot.

2.11 RACING LANE FLOAT

A. Assembly shall have 4 inch diameter plastic floats and donut floats strung on a minimum 3/16 inch diameter vinyl coated stainless steel cable with tension spring and twisting turnbuckle tensioning device at opposite ends.

B. Provide 9 in 25 yard length. Colors shall be alternating red and yellow with solid red 15 feet from each end wall with a black band marker at 15 meters from each end wall.

C. Manufactured by Competitor Swim Products or Anti Wave.

2.12 RACING LANE FLOAT REEL AND COVER

A. Assembly shall have stainless steel frame, and 4 inch stainless steel swivel wheels with individual brakes and capacity for 650 feet of 4 inch diameter lanes. Provide with vinyl cover designed to fit over reel with lane floats in place.

B. Provide 1 reel and 1 cover.

C. Model #75111SS manufactured by Paragon Aquatics or model #36000 manufactured by SR Smith.

2.13 RECESSED STEPS

A. Molded foam white cycolac body with 16-1/2 by 5-1/2 by 6 inch opening.

B. Model #32102 manufactured by Paragon Aquatics or model #62-209-4001 manufactured by SR Smith.

2.14 ROPE ANCHOR

A. Stainless steel cup anchor body and recessed threaded eyebolt.

B. Model #70316SS manufactured by Paragon Aquatics or model #WA-100 manufactured by SR Smith.

2.15 SAFETY EQUIPMENT

A. Body Hook: 16 foot aluminum pole and hook with wall anchors. Model #42-065 by Lincoln Equipment. Provide 2.

B. Ring Buoy: 24 inch diameter with 20 foot throw line. Model #44-075 by Lincoln Equipment. Provide 2.

C. Slope Break Lane Float: Assembly shall have 3/4 inch polypropylene rope, brass chromed end hooks, 5 by 9 inch blue and white locking polyethylene floats spaced 3 feet on center, and length as required. Model #44-115, #44-125 and #44-190 by Lincoln Equipment.

2.16 SAFETY SIGNS

A. 0.040 inch thick white aluminum with dark contrasting printed text and/or diagrams.

1. Artificial Respiration and CPR Sign: 18 x 24 inches with text 1/4 inch high minimum and illustrations for artificial respiration and CPR procedures. Provide 1.
2. Chemical Hazard Signs: 10 x 10 inches NFPA diamond signs for sodium hypochlorite and muriatic acid with 4 inch high printed number signals for health, flammability and reactivity. Provide 2.
3. Diarrhea Sign: 12 x 18 inches with 1 inch high letters warning people with diarrhea not to enter the pool. provide 1.
4. Emergency Phone Number Sign: 24 x 30 inches with 4 inch high letters for the emergency telephone number 911, and 1 inch high letters for the number of the nearest emergency services, and the name and street address of the pool facility. Provide 1.
5. Keep Closed Sign: 12 x 18 inches with 4 inch high letters mounted on outside of all gates with “KEEP CLOSED”. Provide 5.
6. Pool Capacity Sign: 18 x 24 inches with 4 inch high letters to indicate maximum number of pool users as follows “SWIMMING POOL CAPACITY 351 PERSONS”. Provide 1 each.

B. Manufactured by Zumar Industries, Sign Industries or Seton.

2.17 STAIR HANDRAIL

A. Type 304 polished and buffed stainless steel tubing with 1.9 inch outside diameter by 0.109 inch wall thickness. Tubing shall have smooth wrinkle free bends and be dimensioned as indicated.

B. Manufactured by Paragon Aquatics or SR Smith.

2.18 STANCHION POST SOCKET

A. Minimum 6 inch high cast bronze body to accept 1.9 inch outside diameter pipe tube and internal threading for bronze closure cap or locking cap. Provide one opening device for each socket.

B. Model #38201-TC manufactured by Paragon Aquatics or model #AS-100D manufactured by SR Smith.

2.19 STARTING PLATFORM

A. Assembly shall have a 24 by 32 inch non-skid high density polyethylene track start platform, red color, number plates numbered 1 through 8, mounted 29.5 inches above water level, dual leg stainless steel tubing frame, backstroke bar, and side step.

B. Provide optional Track Start Plus Platform Kit to include adjustable angled back plate and side handles.

C. Provide 8.

D. Model #24604 with Track Start Plus manufactured by Paragon Aquatics.

2.20 STARTING PLATFORM ANCHOR

A. Two dual wedge anchors for each platform welded to a stainless steel angle for proper spacing. Anchor body shall be 10 inch deep welded stainless steel with taper lock fit, bronze locking wedge and stainless steel cover. Anchor spacing must match leg spacing of starting platform.

B. Provide one opening device for each pair of anchors.

C. Model #23140DW manufactured by Paragon Aquatics.

2.21 UNDERWATER LIGHT AND NICHE

A. Stainless steel light, niche, and face ring, 55 watt white LED bulb, 120 volt, with low water cut-off switch, and U.L. listed with encapsulated terminals. Cord length as required to change bulb on deck two feet back from pool edge.

B. Model “IntelliBrite 5G” manufactured by Pentair Pool Products.

2.22 WATER TEST KIT

A. Complete water test kit to include carrying case, 2 ounce reagents, 5 slide comparators, and drop test for free and total chlorine, pH, total alkalinity, calcium hardness, total hardness, cyanuric acid and acid/base demand.

B. Model #K-1741C manufactured by Taylor.

2.23 WEDGE ANCHOR

A. Minimum 4.25 inch long cast bronze body to accept 1.9 inch outside diameter pipe tube with bronze locking wedge and stainless steel set bolt and washer.

B. Model #28102 manufactured by Paragon Aquatics or model #IAS-100 manufactured by SR Smith.

2.24 WEDGE ANCHOR ESCUTCHEON PLATE

A. Stainless steel body with stainless steel set screw and designed to fit over wedge anchor.

B. Model #28301SS manufactured by Paragon Aquatics or SR Smith.

PART 3 - EXECUTIONS

3.1 INSTALLATION OF ANCHORS AND SOCKETS

A. Install anchors and sockets level and plumb.

B. Install anchors and sockets flush with adjacent concrete deck, plaster surface, or tile surface as appropriate.

3.2 INSTALLATION OF COMPETITIVE EQUIPMENT

A. Assemble all components of the following equipment, attach to appropriate anchors and demonstrate operation to Owner:
   1. Backstroke pennant.
   2. Backstroke stanchion post.
   3. Racing lane float.
   4. Racing lane float reel.
   5. Starting platform.

3.3 INSTALLATION OF DECK EQUIPMENT

A. Assemble all components of the following equipment and demonstrate operation to Owner.
   1. Pool covers.
   2. Pool vacuum.

3.4 INSTALLATION OF SAFETY SIGNS

A. Install signs with stainless steel expansion anchors and finishing hardware in locations indicated.

3.5 INSTALLATION OF SAFETY EQUIPMENT

A. Install body hook and ring buoy in locations indicated by Owner.

B. Assemble all components of slope break lane float line and attach to appropriate rope anchors.

C. Assemble all components of disabled access lift and place on pool deck to demonstrate operation to Owner.

D. Assemble all components of lifeguard chair and place on pool deck in location indicated by Owner.

END OF SECTION

SECTION 13 11 15

POOL MECHANICAL EQUIPMENT

PART 1 - GENERAL

1.1 RELATED DOCUMENTS

A. Drawings and general provisions of the Contract, including General and Supplementary Conditions and Division 1 Specification Sections, apply to this Section.

1.2 SUMMARY

A. Section includes pool mechanical equipment, piping, valves, and fittings.

1.3 SUBMITTALS

A. Product Data: Submit for all products listed in this Section.

B. Shop Drawings: Submit equipment room plumbing plan and elevations if proposed filter manifold locations vary from locations shown on drawings.

C. Valve Sequencing Chart: Submit chart for approval after completing pool start-up and adjusting all systems.

D. Operation and Maintenance Instructions: Submit for filters, heaters, circulation pumps, chemical controllers, chemical feed pumps, and make-up water valve.

1.4 QUALITY ASSURANCE

A. All mechanical equipment shall be certified to meet NSF (National Sanitation Foundation) Standard 50 requirements.

B. Install piping in accordance with AWWA (American Water Works Association) Manual 23.

PART 2 - PRODUCTS

2.1 ACID FEED PUMP

A. Pump: Peristaltic action pump capable of producing 25 feet of suction lift with mechanical feed rate control, on-off switch, plastic housing, injection fitting, weighted suction line strainer, and wall mounting bracket.

B. Liquid End: Materials shall be suitable for the delivery of hydrochloric acid with connections for 3/8 inch tubing.

C. Performance: 85 gallons per day maximum output, 25 pounds per square inch minimum injection pressure, and 120 volt power connection.

D. Model #85M5 manufactured by Stenner Pump Company.

2.2 ACID STORAGE TANK

A. Seamless polyethylene double wall construction, 16 inch airtight sealed manway, 52 inch diameter, 56 inch height, and 350 gallon capacity.

B. Bulkhead Fittings: All penetrations shall be on top of tank through PVC compression fittings with viton gaskets. Provide 1-1/2 inch bulkhead fitting with 90 degree female cam action coupler and airtight plug for filling, 2 inch fitting for level gauge, 1 inch fitting for vent pipe, and three 3/8 inch fittings for chemical pump suction lines.

C. Model #TC5256DC with FA and GB Series (Banjo) fittings manufactured by Chem-Tainer Industries.

2.3 CHEMICAL CONTROLLER

A. Integrated microprocessor based controller to continuously monitor pH, ORP, PPM, temperature, flow, surge chamber water level, and control feeders for sodium hypochlorite and muriatic acid. Assembly shall have the following:

1. Controls: Sealed glass pH electrode, sealed platinum ORP electrode, solid state PPM sensor, temperature sensor, sensor cell assembly with rotary flow switch, flow meter, y-strainer and digital readout indicating pH, ORP, PPM, temperature, and flow. Controls shall be accessible by push-button menu keys with set level from 0 to 14 for pH and 0 to 10 PPM for chlorine. Controller shall have RS-232 communication port for remote data downloading, flow sensor input for flow monitoring and water level sensor with automatic fill valve control.
2. Circuitry: 115 volt power connection with 2 outputs of 5 amps each for chemical feeders.
3. Housing: Acrylic or fiberglass enclosure.

B. Model #PC3000 with optional PPM sensor manufactured by Chemtrol.

2.4 CHEMICAL TANK LEVEL GAUGE

A. Double plastic dome and nut assembly, gasket, 2 inch threaded bushing, polyethylene indicator tube with tank level in 1/8 increments, polyethylene float with plastic rod assembly. All internal tank parts shall be suitable for use with muriatic acid and sodium hypochlorite, and manufactured from plastic.

B. Manufactured by Krueger Sentry Gauge.

2.5 CHLORINE FEED PUMP

A. Pump: Peristaltic action pump capable of producing 25 feet of suction lift with mechanical feed rate control, on-off switch, plastic housing, injection fitting, weighted suction line strainer, and wall mounting bracket.

B. Liquid End: Materials shall be suitable for the delivery of sodium hypochlorite with connections for 3/8 inch tubing.

C. Performance: 120 gallons per day maximum output, 25 pounds per square inch minimum injection pressure, and 120 volt power connection.

D. Model #170DM4 manufactured by Stenner Pump Company.

2.6 CHLORINE STORAGE TANK

A. Seamless polyethylene double wall construction, 16 inch airtight non-vented manway, 59 inch diameter, 71 inch height, and 500 gallon capacity.

B. Bulkhead Fittings: All penetrations shall be on top of tank through PVC compression fittings with viton gaskets. Provide 2 inch bulkhead fitting with 90 degree male cam action coupler and airtight cap for filling, 2 inch fitting for level gauge, 1 inch fitting for vent pipe, and 3/8 inch fitting for chemical pump suction line.

C. Model #TC5971DC with FA and GB Series (Banjo) fittings manufactured by Chem-Tainer Industries.

2.7 CIRCULATION PUMP

A. Type: Horizontal, close coupled, end suction centrifugal pump, bronze fitted with cast iron volute, replaceable bronze wear rings, enclosed bronze impeller, leakless mechanical seal, and fuse coated cast iron wetted surfaces. 5 inch suction and 4 inch discharge with 125# ANSI flanges. Pump shall be certified to meet NSF Standard 50 requirements.

B. Motor: Premium efficiency, 93 percent minimum, 1760 rpm, 20 hp, 480 volt, 3 phase, 60 hertz, 1.15 service factor, inverter rated and TEFC enclosure.

C. Performance: 850 gpm @ 65 feet of head with 81 percent efficiency, and13.6 feet NPSHR.

D. Model 40957 LC manufactured by Paco Pumps.

2.8 CIRCULATION PUMP REDUCER COUPLING

A. Stainless steel body with 125# ANSI flanged ends, 50 pounds per square inch operating pressure, eccentric type at pump suction and concentric type at pump discharge.

B. Manufactured by Aquify Systems.

2.9 CIRCULATION PUMP STRAINER

A. Stainless steel body, straight type with 6 inch flanged ends, 1 inch thick transparent acrylic lid, stainless steel toggle bolts with fiberglass hand knobs, bottom drain connection, pressure sensors, and stainless steel strainer basket with 5/32 inch perforations..

B. Provide 1 additional strainer basket.

C. Model #STR-0606-SS4 manufactured by Aquify Systems.

2.10 FILTER

A. Regenerative media type with NSF 50 listing for flow of 1.5 gallons per minute per square foot of filter area. System shall have 1 tank with a total filter area of 700 square feet and the following components:

1. Tank: Fiberglass tank designed for seismic installation, 42 inch diameter, 76.5 inch height with manhole access. Tank shall be designed for a working pressure of 50 pounds per square inch.
2. Components: Flexible tube filter elements with high strength polyester braid outer wall and stainless steel spring supported by a stainless steel tube sheet and lift shaft. System shall include a pneumatically operated bump mechanism to dislodge the media and recoat filter elements, vacuum transfer system to recharge media, all necessary pneumatic butterfly valves for operation, sight glass, drain valve, 10 inch influent check valve, and air compressor.
3. Automatic Controller: System operation including filtration and regeneration cycles shall be automatically controlled with a programmable micro processor capable of the following functions:
    a. Bump cycle either manual or automatic
    b. Precoating of the filter elements.
    c. Stopping and starting of the circulation pump.
    d. Opening and closing of pneumatically operated valves.
    e. Vacuum transfer system.
    f. Heater cool down delay.
    g. Auxiliary contacts to interlock chemical control or other equipment.
    h. Keyed switch to activate bump cycle.
    i. LCD panel display with system operating status and graphics.
    j. Remote monitoring and control.

B. Media: Tank shall have the manufacturer's recommended amount of expanded perlite with a median particle size of 37 microns and 8 to 25 percent retained on a Tyler 150 Mesh. Media shall be Celaperl 1000 by EP Minerals and six additional charges of media shall be provided.

C. Model # PMF-42-700-FRP manufactured by Aquify Systems.

2.11 FLOOR INLET

A. Cycolac body, 5 inch diameter, 2 inch solvent weld connection, and adjustable internal spinner valve disc with stainless steel screw.

B. Model #8417-0000 manufactured by Sta-Rite Industries.

2.12 FLOW METER – CHEMICAL BYPASS

A. Battery powered flow meter with digital display, display averaging, ±0.5 percent accuracy, wall mounted, and paddle wheel flow sensor with PVC pipe saddle.

B. Model #8150 and #515 manufactured by Signet.

2.13 FLOW METER – HEATER BYPASS

A. Battery powered flow meter with digital display, display averaging, ±0.5 percent accuracy, pipe mounted, and paddle wheel flow sensor with PVC pipe saddle.

B. Model #8150 and #515 manufactured by Signet.

2.14 FLOW METER – UV BYPASS

A. Battery powered flow meter with digital display, display averaging, ±0.5 percent accuracy, pipe mounted, and paddle wheel flow sensor with PVC pipe saddle.

B. Model #8150 and #515 manufactured by Signet.

2.15 FLOW SENSOR

A. Magnetic flow sensor with digital display, corrosion resistant enclosure, 4 to 20 mA 4-wire output, 0.15 to 33 feet per second range, ±1 percent accuracy, 24 volt power supply, and PVC pipe saddle or tee.

B. Model #2551 manufactured by Signet.

2.16 GAUGES

A. Pressure Gauge: Pressure Gauge: Polished stainless steel case, aluminum face, 1/4 inch NPT brass bottom connection, bronze tube, 0-60 psi scale range, ±1 percent accuracy, and 2.5 inch diameter acrylic face.

B. Vacuum Gauge: Polished stainless steel case, aluminum face, 1/4 inch NPT brass bottom connection, bronze tube, 0-30 inches of mercury scale range, ±1 percent accuracy, and 2.5 inch diameter acrylic face.

C. Model D80 manufactured by Trerice.

2.17 HEATER

A. General: Indoor heater designed for swimming pool heating applications and natural gas operation. Sealed combustion type using stainless steel burners, cupronickel finned tubing, bronze header, stainless steel condensing heat exchanger, cupronickel indirect heat exchanger, ASME pressure relief valve, slow opening diaphragm gas valve, pressure regulator, blower assembly with pressure switch to control gas/air ration, hot surface ignition, bronze boiler pump, bronze indirect pump, temperature gauges, pressure gauge, flow switch, and enclosed in a galvanized steel outer jacket. AGA design certifications for a minimal thermal efficiency of 96 percent and low NOx rating meeting SCAQMD Rule 1146.2.

B. Controls: Front mounted control panel with plug-in electrical components, LCD display, diagnostic information center with system alerts, built-in circuit breaker, and meet California Code.

C. Performance: Gross input 1,500,000 BTU/hr with gross output 1,455,000 BTU/hr at sea level.

D. Model #XTherm Indirect 1505A manufactured by Raypak.

2.18 HEATER VENT – CATEGORY IV

A. Schedule 40 PVC pipe and fittings, ASTM D1785, designed to exhaust all flue gasses to outside with condensation in the vent, and UL listed for Category IV appliances. Provide with rain cap and necessary supports.

B. Manufactured by Apache, Harvel Plastics or Spears Manufacturing.

2.19 MAIN DRAIN GRATE

A. Fiberglass sump with 10” pipe connection, PVC grate, 18 by 36 inches with stainless steel anchoring screws, white color, 62% open area, 25 year life, and certified flow rate of 2,480 gallons per minute.

B. Model #DalMAX-SG-183628 manufactured by Daldorado.

2.20 PIPE HANGERS AND SUPPORTS

A. Steel pipe hangers, supports, brackets and clamps shall be designed and manufactured in accordance with MSS (Manufacturers Standardization Society) SP58. Hangers shall be hot dip galvanized after fabrication in accordance with ASTM A123. All hanger hardware shall be hot dip galvanized or stainless steel. Provide means of preventing dissimilar metal contact such as plastic coating, isolation tape or felt.

B. Manufactured by Eaton B-Line or Unistrut.

2.21 PIPE SLEEVE – FIRE RATED

A. Fire resistant sleeve system for PVC pipe penetrations, UL listed with 1 hour minimum rating, steel metal support clips, foil faced intumescent wrap strip, and silicone sealant.

B. Model #C-AJ-2002 manufactured by 3M Fire Protection Products.

2.22 POOL PIPING

A. PVC Pipe: ASTM (American Society for Testing and Materials) D1785, Schedule 80.
   1. Fittings: ANSI (American National Standards Institute)/ASTM D2467, PVC.
   2. Joints: ASTM D2855, solvent weld.

B. Manufactured by Apache, Harvel Plastics or Spears Manufacturing.

2.23 POOL PIPING – HEATER BYPASS

A. CPVC Pipe: ASTM F441, Schedule 80.
   1. Fittings: ANSI/ASTM F439, CPVC.
   2. Joints: ASTM D2855, solvent weld.

B. Manufactured by Apache, Harvel Plastics or Spears Manufacturing.

2.24 PVC WATERSTOP

A. Fabricated from Type 1 PVC sheet conforming to ASTM 1784, 1/2 inch thick minimum with a diameter 4 inches larger than outside diameter of pipe. A one-piece Class 150 PVC flange with the pipe stop removed can also be used.

B. Manufactured by Apache, Harvel Plastics or Spears Manufacturing.

2.25 UV SYSTEM

A. HDPE reactor chamber with quartz glass sleeve, 240 volt, single phase, electronic ballasts, four 320 watt UV-C lamps, 6 inch flange connections, and NSF 50 certified for 566 gallon per minute flow.

B. Model #CLP64A8-XN manufactured by Pentair Pool Products.

2.26 VALVE – BALL

A. PVC body and ball, full line size, double lever handle, double union with socket ends, viton seals, teflon seats, pressure rating of 150 pounds per square inch at 70 degrees F.

B. Manufactured by Asahi/America or Spears Manufacturing Company.

2.27 VALVE – BUTTERFLY

A. PVC wafer body, full line size, EPDM liner, stainless steel shaft, PVC disc, gear operators for 8 inch and larger, lever operators for 6 inch and smaller, and pressure rating of 150 pounds per square inch at 70 degrees F.

B. Manufactured by Asahi/America or Spears Manufacturing Company.

2.28 VALVE – CHECK

A. Ductile iron body, fully lined with EPDM liner, dual stainless steel discs, cast iron wafer alignment body, full line size, pressure rating of 150 pounds per square inch at 70 degrees F. Series 800 manufactured by Center Line.

B. Diameter 2 inch and Below: PVC body and ball, full line size, double union with socket ends, viton seals and seats, and pressure rating of 150 pounds per square inch at 70 degrees F. Manufactured by Asahi/America, Hayward Industrial Products or Spears Manufacturing Company.

2.29 VALVE - MAKE UP WATER

A. 2-way slow closing solenoid valve with brass body, normally closed, NEMA 4X coil, voltage as required, PTFE seals, 2 inch threaded end connections, and pressure rating of 125 pounds per square inch at 155 degrees F.

B. Model #8221G013, manufactured by Asco.

2.30 VARIABLE FREQUENCY DRIVE

A. Rating horsepower and voltage as required for circulation pump, variable torque, 14 to 122 degree F ambient operating temperature, alphanumeric backlit display keypad, 4-20 milliamp signal input, sinusoidal PWM output with voltage vector control, internal time clock, oversized NEMA 4 enclosure with temperature controlled cooling fans. Protective functions shall include over current, over voltage, under voltage, motor overload, low overload, drive fault, ground fault, over temperature, and line surge.

B. Provide fused disconnect, built-in motor starter and four position drive/off/bypass/test switch. The VFD shall provide 2 user programmable relays with 75 selectable functions. Two form ‘C’ 230VAC/2A rated dry contact relay outputs shall be provided. Program one relay as Pump Run for other equipment control.

C. Model Acu Drive XS, manufactured by Pentair Pool Products.

2.31 WATER HAMMER ARRESTOR

A. Stainless steel construction, bellows type to PDI WH-201, pre-charged suitable for operation in temperature range - 33 to 300 degrees F and maximum 125 psi working pressure.

B. Model #Z1700-600, manufactured by Zurn Industries.

PART 3 - EXECUTIONS

3.1 PIPING AND FITTING INSTALLATION

A. Install piping in accordance with AWWA Manual 23.

B. Install piping to conserve space, not interfere with use of space and other work. Route piping in orderly manner, and maintain gradient. Group whenever practical at common elevations.

C. Install plastic slip-on labels or tape with pressure-sensitive adhesive and 1 inch high letters. Label "GUTTER DRAIN", "MAIN DRAIN", "BACKWASH", "POOL DRAIN", "CHEMICAL BYPASS", “HEATER BYPASS”, “UV BYPASS” and "POOL RETURN" lines for each pool. Indicate flow direction with 3 inch long arrows at 10 foot maximum intervals.

D. Install hangers or floor supports at 8 foot maximum intervals and as necessary to prohibit pipe vibration. Provide transverse and longitudinal bracing for seismic installation per SMACNA (Sheet Metal Air Conditioning Contractors National Association).

E. Support piping adjacent to pump such that no weight is carried on pump casings. For close coupled or base mounted pumps, provide supports under elbows on pump suction and discharge line sizes 4 inches and over.

F. Install piping to allow for expansion and contraction without stressing pipe, joints, or connected equipment.

G. Install valves with easy access to operators and clear line of sight to position indicators. Install check valves with 5 diameters of straight pipe upstream according to manufacturer's instructions.

H. Use fittings of larger pipe size when joining different size pipes.

I. Install pool fittings flush with adjacent finish surfaces.

J. Install PVC waterstop at center of slab or wall thickness and solvent welded in place to pipe.

3.2 MECHANICAL EQUIPMENT INSTALLATION

A. Install equipment in accordance with manufacturer's instructions.

B. Anchor pool mechanical equipment to concrete with stainless steel expansion anchors. Provide size and number as indicated for seismic installation.

C. Install close coupled and base mounted pumps on concrete base with anchor bolts, set level, and grout in place.

D. Bond each heater, filter tank, circulation pump, and UV system to the pool shell reinforcing steel.

E. Pipe heater pressure relief valve line to floor sink.

F. Install flow meter sensor with 15 diameters of straight pipe upstream and 5 diameters downstream according to manufacturer's instructions.

G. Install plastic nameplates or labels with pressure-sensitive adhesive. Label the following:

1. Acid Tank – "350 GALLONS - DILUTED MURIATIC ACID - 7% HCL MAXIMUM" in 1 ½ inch high text.
2. Chlorine Tank – "500 GALLONS – 12.5% SODIUM HYPOCHLORITE" in 1 ½ inch high text.
3. "CHEMICAL CONTROLLER – "850 GPM" in ¼ inch high text.
4. "ACID FEED PUMP" in ½ inch high text.
5. "CHLORINE FEED PUMP" in ½ inch high text.
6. "CHEMICAL BYPASS FLOW METER" in ½ inch high text.
7. "HEATER BYPASS FLOW METER" in ½ inch high text.
8. "UV BYPASS FLOW METER" in ½ inch high text.
9. "ULTRA VIOLET" in ½ inch high text.
10. "VARIABLE FREQUENCY DRIVE" in ½ inch high text.

3.3 FIELD TESTS

A. Pressure Tests: Hydrostatically test all buried water piping systems prior to backfilling from inside of pool shell to inside of equipment room.

B. Buried Piping: Flush piping to clean and remove all air and test at a pressure of 80 psi. Install hose bibb at each end of system and calibrated test gauge to observe any loss of pressure. Close off system and retain required test pressure for one hour minimum and inspect all joints and connections for leakage. Repair all leaks by removing and replacing failed joints with new solvent welded fittings, and repeat test until all leakage has been stopped. Maintain a pressure of 40 psi in all lines throughout the remaining construction period.

3.4 VALVE SEQUENCING CHART

A. Tag and number all manual valves with plastic plates or brass attached to valve body with chain.

B. Provide 8 1/2" x 11" minimum chart with each valve number, description of valve, and valve position required for each of the following:

1. Normal pool operation.
2. Filter backwash.
3. Draining pool.
4. Manual pool water fill.

C. List key pool data on chart including surface area, volume and turnover rate.

D. Laminate chart to rigid backing and mount to wall in equipment room.

E. Include copy of chart with operation and maintenance manual.

END OF SECTION

SECTION 13 11 16

POOL SYSTEMS START-UP

PART 1 - GENERAL

1.1 RELATED DOCUMENTS

A. Drawings and general provisions of the Contract, including General and Supplementary Conditions and Division 1 Specification Sections, apply to this Section.

1.2 SUMMARY

A. Section includes start-up procedures for all pool systems and instruction of Owner's personnel on operation and maintenance of all pool systems.

1.3 SUBMITTALS

A. Reports: Submit results of water analysis, manufacturer’s start-up certificates, and swimming pool survey.

1.4 SWIMMING POOL SYSTEMS START-UP

A. Provide seven days notification prior to starting pool systems.

B. Ensure that each piece of equipment and system is ready for operation. Do not plaster and fill pool until all mechanical systems are operational.

C. Execute start-up in accordance with manufacturers' instructions.

D. Fill pool slowly with domestic water and protect finishes from damage. Add sufficient sequestering agent to pool water to reduce reaction of metal ions with chlorine. Follow manufacturer’s instructions for product use.

E. Provide complete domestic water analysis to determine quantities and types of chemicals necessary to maintain pool water within the following levels:

1. pH: 7.2 to 7.6.
2. Alkalinity: 80 to 100 ppm.
3. Calcium hardness: 200 to 400 ppm.
4. Chlorine: 1.5 to 2.0 ppm.
5. Total dissolved solids: 300 to 1,000 ppm.

F. Provide all chemicals and balance water immediately after initial pool filling and until project completion and acceptance by the Owner.

G. Start up the entire pool system and operate all components for 7 consecutive days minimum and until project completion and acceptance by the Owner. Start-up will include all equipment required for proper operation of the pool and the following.

1. Periodically clean pump strainer until no further accumulation of debris occurs.
2. Add chemicals as required for acceptable water quality.

3. Adjust all safety and automatic controls for proper operation and sequence.
4. Immediately repair and correct all deficiencies during the operational test and continue the test until 7 days of satisfactory performance has occurred without any defects.

H. After successful conclusion of operational testing, clean strainers, backwash filter media, and leave the entire pool systems ready for use.

1.5 OPERATING INSTRUCTIONS

A. Provide instruction and demonstrate use and operation of the following equipment by the manufacturer's representative. Provide certificate from manufacturer's representatives that equipment and systems are adjusted and operating properly.
1. Filter system: Set filter controller and pneumatic valves for proper operation. Set variable frequency drive to maintain constant flow rate as indicated based on milliamp signal from flow meter. Set drive for proper flow rates during filter bump and pre-coat operations.
2. Heating system: Heater shall be adjusted for proper operation after pool temperature reaches 82 degrees. Instruct Owner on heater cool down requirements for filter backwash operation.
3. Chemical controller and chemical feed pumps: Set controller bypass loop valves for proper flow rate across probes. Set feed pump output rates for proper operation with controller. Instruct Owner on controller programming, probe maintenance, and demonstrate flow switch feed pump safety interlock.
4. Circulation pump variable frequency drive: Set drive to maintain constant flow rate as indicated based on milliamp signal from flow meter. Set the motor full load amp rating as the limiting factor for pump operation.

B. Provide instruction and demonstrate operation of entire pool mechanical system by Contractor. Review valve sequencing chart and proper valve positioning for normal operation, filter backwash, pool draining, and manual pool water fill. Restrict main drain valve for 80% flow (1/8 inch water depth) over gutter during normal operation. Set pool fill system surge chamber sensor to the level indicated on the drawings.

1.6 POOL SURVEY

A. Provide survey of completed Swimming Pool shell to verify length, depth and gutter lip elevations indicated. Survey to be prepared by a California licensed surveyor and include the following:
1. Competitive swimming length at each lane.
2. Pool water depth at shallow end, slope break and deep end along both sides of pool.
3. Gutter lip elevation at each corner of pool and midpoint of each wall.

PART 2 - PRODUCTS

NOT USED

PART 3 - EXECUTIONS

NOT USED

END OF SECTION

SECTION 13 11 17

POOL ELECTRICAL

GENERAL PROVISIONS

PART 1 - GENERAL

1.1 SCOPE

A. Work Included: All labor, materials, appliances, tools, equipment, facilities, transportation and services necessary for and incidental to performing all operations in connection with furnishing, delivery and installation of the work of this Section, complete, as shown on the drawings and/or specified herein. Work includes, but is not necessarily limited to, the following:

B. Examine all other sections for work related to those other sections and required to be included as work under this section.

C. General provisions and requirements for electrical work.

1.2 SUBMITTALS

A. General
1. Review of contractor's submittals is for general conformance with the design concept of the project and general compliance with the information given in the contract documents. Any action shown is subject to the requirements of the plans and specifications. Contractor is responsible for quantities; dimensions which shall be confirmed and correlated at the job site; fabrication processes and techniques of construction; coordination of work with that of all other trades and satisfactory performance of their work.
2. The Contractor shall review each submittal in detail for compliance with the requirements of the contract documents prior to submittal to the Architect.
3. Where the construction documents indicate specific manufacturer(s) for any given product, it shall be considered a substitution if the contractor proposes to use any manufacturer other than those specifically named and be subject to engineer approval.

B. The Contractor shall be responsible for incidental, direct and indirect costs resulting from the substitution of specified contract materials or work.

C. Maintenance and Operating Manuals
1. The Contractor shall furnish three copies of typewritten maintenance and operating manuals for all electrical equipment, fire alarm equipment,

sound system equipment, etc., to the City and instruct City's personnel in correct operation of all equipment at completion of project.

2. Where these specifications indicate to provide District personnel with instructional training sessions, the Contractor shall videotape all such instructional sessions. The Contractor shall provide all equipment and personnel required to create a color VHS video and audio recording and shall turn over to the City a total of two (2) copies of each tape prepared.
3. Maintenance and operating manuals shall be bound in three-ring, hard-cover, plastic binders and shall be delivered to the City with letter of transmittal, carbon copy to the Architect.

D. Portable or Detachable Parts: The Contractor shall retain in his possession, and shall be responsible for all portable and detachable parts or portions of the installation such as fuses, keys, locks, adapters, locking clips, and inserts until final completion of contract work. These parts shall then be delivered to the Owner or his authorized representative and an itemized receipt obtained, with copies of receipt sent to the Architect.

E. Record Drawings
1. Provide and maintain in good order at the job site a complete set of electrical contract prints. Changes to the contract to be clearly recorded on this set of prints. At the end of the project, the Contractor shall transfer all changes to one set of plans to be delivered to the Architect.
2. The actual location and elevation of all buried lines, boxes, monuments, vaults, stub-outs and other provisions for future connections shall be referenced to the building lines or other clearly established base lines and to approved bench marks.
3. The Contractor shall keep the "record" prints up to date and current with all work performed.
4. A mandrel shall be pulled through each conduit upon completion of the duct bank.

1.3 GENERAL SUMMARY OF ELECTRICAL WORK

A. The specifications and drawings are intended to cover a complete installation of systems. The omission of expressed reference to any item of labor or material for the proper execution of the work in accordance with present practice of the trade shall not relieve the Contractor from providing such additional labor and materials.

B. Refer to the drawings and shop drawings of other trades for additional details which affect the proper installation of this work. Diagrams and symbols showing electrical connections are diagrammatic only. Wiring diagrams do not necessarily show the exact physical arrangement of the equipment.

C. Before submitting a bid, the Contractor shall familiarize himself with all features of the building drawings and site drawings which may affect the execution of the work. No extra payment will be allowed for failure to obtain this information.

D. If there are omissions or conflicts between the drawings and specifications, clarify these points with the Architect before submitting bid.

1.4 LOCATIONS OF EQUIPMENT

A. The drawings indicate diagrammatically the desired locations or arrangements of conduit runs, outlets, equipment, etc., and are to be followed as closely as possible. Proper judgment must be exercised in executing the work so as to secure the best possible installation in the available space and to overcome local difficulties due to space limitations or interference of structure conditions encountered.

B. Where outlets are placed on a wall, locate symmetrically with respect to each other and other features or finishes on the wall.

C. In the event changes in the indicated locations or arrangements are necessary, due to developed conditions in the building construction or rearrangement of furnishings or equipment, such changes made without cost, providing the change is ordered before the conduit runs, etc., and work directly connected to same is installed and no extra materials are required.

D. Lighting fixtures in mechanical spaces are shown in their approximate location only. Do not install light outlets or fixtures until mechanical piping and duct work is installed, then install lights in a location to provide best lighting.

E. The locations of existing utilities, building, equipment and conduit shown on the drawings is approximate. Verify exact locations and routing of existing systems in the field. Include all costs in contract price for adjustment required to accommodate existing conditions.

F. Coordinate and cooperate in every way with other trades in order to avoid interference and assure a satisfactory job.

1.5 POOL MECHANICAL EQUIPMENT WIRING

A. Provide electrical work, materials, and control components required for proper operation of the pool mechanical systems.

1.6 QUALITY ASSURANCE

A. Work and materials in full accordance with the latest rules and regulations of the California Code of Regulations Title 24, Part 3 "California Electrical Codes", Title 8 "Division of Industrial Safety" the National Life Safety Code, and other applicable Federal and State laws and regulations.

B. All material and equipment shall be new and shall be delivered to the site in unbroken packages. All material and equipment shall be listed and labeled by Underwriters Laboratories or other recognized testing laboratories, where such

listings are available. Comply with all installation requirements and restrictions pertaining to such listings.

C. Work and material shown on the drawings and in the specifications is new and included in the contract unless specifically indicated as existing or N.I.C. (not-in-contract).

D. Keep a copy of all applicable codes available at the job site at all times while performing work under this section. Nothing in plans or specifications shall be construed to permit work not conforming to the most stringent of codes.

1.7 CLEANING EQUIPMENT, MATERIALS, PREMISES

A. All parts of the equipment shall be thoroughly cleaned of dirt, rust, cement, plaster, etc., and all cracks and corners scraped out clean. Surfaces to be painted shall be carefully cleaned of grease and oil spots and left smooth, clean and in proper condition to receive paint finish.

1.8 JOB CONDITIONS - PROTECTION

A. Protect all work, materials and equipment from damage from any cause whatever and provide adequate and proper storage facilities during the progress of the work. All electrical equipment shall be stored in a weather-tight structure. Provide for the safety and good condition of all the work until final acceptance of the work by the Owner and replace all damaged or defective work, materials and equipment before requesting final acceptance.

1.9 CUTTING AND PATCHING

A. Perform cutting and patching of the construction work which may be required for the proper installation of the electrical work. Patching shall be of the same material, thickness, workmanship and finish as existing and accurately match surrounding work to the satisfaction of the Architect. Cutting of structural members shall not be done without notifying the Architect and obtaining their approval.

1.10 IDENTIFICATION

A. Panelboards, terminal cabinets, circuit breakers, disconnect switches, starters, relays, time switches, contactors, pushbutton control stations, and other apparatus used for the operation or control of feeders, circuits, appliances, or equipment shall be properly identified by means of descriptive nameplates or tags permanently attached to the apparatus and wiring.

B. Nameplates shall be engraved laminated phenolic. Attachment to equipment shall be with metal fasteners or adhesive.

C. Plates: All cover and device plates shall be furnished with labels under any one of the following conditions:
1. Three gang or larger gang switches.
2. Keyed and/or locking switches.
3. Pilot light switches.
4. Switches in locations from which the equipment or circuits controlled cannot be readily seen.
5. Manual motor starting switches.
6. Switches which serve other than lighting loads.
7. Where so indicated on the drawings.
8. As required on all control circuit switches, such as heater controls, etc.
9. Where receptacles are other than standard duplex receptacles to indicate voltage and phase.

D. Provide black-on-white laminated plastic nameplates engraved in minimum 1/4" high letters to correspond with the designations on the drawings. Provide other or additional information on nameplates where indicated.

E. Cardholders and cards shall be provided for circuit identification in panelboards. Cardholders shall consist of a metal frame retaining a clear plastic cover permanently attached to the inside of panel door. List of circuits shall be typewritten on card.

F. Junction and pull boxes shall have covers marked with circuit numbers according to panel schedule. Data shall be lettered in a conspicuous manner with a color contrasting to finish.

G. Miscellaneous Electrical Equipment: Identify individually mounted starters, transformers, pullboxes, junction boxes, and related items as required by the use of such equipment with plates as for panelboards. All junction boxes shall be marked to indicate panel of origin and circuit numbers within the box.

1.11 SERIES RATED EQUIPMENT

A. Circuit protective devices identified as "Series Rated" or "Current Limiting" (i.e., CLCB - current limiting circuit breaker; CLF - current limiting fuse; etc.) shall be series rated and tested (UL 489 and CSA5) by the manufacturer with all equipment and circuit protective devices installed down stream of the identified series rated or current limiting devices.

1.12 SPARE FUSES

A. Provide (3) three spare fuses for each size and type to match the installed fuses where the fuses are provided as part of the contract.

1.13 WALL MOUNTED ELECTRICAL EQUIPMENT

A. Provide multiple horizontal sections of metal “C” channels for support and attaching wall mounted equipment to walls. Channels shall provide “turned lips” at longitudinal edges to hold “lock-in” fasteners and shall comply with ANSI-1008 and ASTM-A569 latest revision. The channels shall be steel hot dip zinc galvanized. As manufactured by Unistrut or Kindorf.

B. The “C” channels shall be positioned horizontally within 3 inches of the top and bottom of each, equipment section cabinet and located behind each equipment vertical section. Provide additional intermediate “C” channels at not less than 36 inches on center between the “top” and “bottom” “C” channel positions, located behind each equipment vertical section.

C. The “C” channels shall be of sufficient length to provide connection to not less than two (2) vertical structural wall framing elements separated by not less than 16 inches; but in no case shall the “c” channel length be less than the width of the respective equipment section.

D. Attach the “C” channels to the wall structural elements after the wall, finish surface, installation (including painting) is complete.

E. Attach the “C” channels with fasteners to the building wall framing structural elements as follows: welded to steel framing; bolted to wood framing; cast in place concrete inserts for masonry and concrete construction; drilled “afterset” expansion anchors for existing masonry and concrete construction.

F. Attach the equipment to the “C” channels with threaded and bolted fasteners to “prelocate” and lock into the channel “turned lips” and channel walls.

1.14 ELECTRICAL WORK CLOSEOUT

A. Prepare the following items and submit to the Architect before final acceptance.
   1. Copy of local and/or state code enforcing authorities final inspection certificates.
   2. Copy of as-built record drawings as required under the General Conditions, pertinent Division One Sections and Electrical General Provisions.
   3. Copy of all receipts transferring portable or detachable parts to the Owner when requested.
   4. Notify the Architect in writing when installation is complete and that a final inspection of this work can be performed. In the event any defect or deficiencies are found during this final inspection they shall be corrected to the satisfaction of the Architect before final acceptance can be issued.

B. The Contractor shall complete the following work before any electrical equipment is energized:
   1. All equipment shall be permanently anchored.
   2. All bus connections shall be tightened per manufacturer's instructions.

3. All ground connections shall be completed and identified. Perform and successfully complete all required megger and ground resistance tests.
4. All feeders shall be connected and identified.
5. The interiors of all electrical enclosures including busbars and wiring terminals shall be cleaned of all loose material and debris, paint, plaster, cleaners or other abrasive's overspray removed and equipment vacuumed clean.
6. All dry wall work and painting shall be completed within the electrical rooms.
7. All doors to electrical equipment rooms shall be provided with locks in order to restrict access to energized equipment.

PART 2 – PRODUCTS (NOT USED)

PART 3 – EXECUTIONS (NOT USED)

RACEWAY AND WIRING

PART 1 – GENERAL

1.1 DESCRIPTION OF WORK

A. This section includes general requirements for raceways and wiring materials and methods of installation.

1.2 REFERENCES

A. Standards of manufacture: Conductors and raceways shall be UL-listed.

1.3 SEQUENCING AND SCHEDULING

A. Installation of conduit and wiring shall be coordinated with the work of other trades, specifically structural components, piping and duct work.

PART 2 – PRODUCTS

2.1 CONDUIT

A. Rigid Metallic Conduit (RMC): Unless otherwise indicated, all RMC shall be steel of standard iron pipe size with screwed joints for electrical raceway use. Finish shall be zinc-coated (galvanized) applied by hot-dipping or sherardizing.

B. Intermediate Metallic Conduit (IMC): See requirements above for RMC.

C. Electrical Metallic Tubing (EMT): EMT shall be zinc-coated and is approved in sizes through 2" nominal.

D. Rigid Non-Metallic Conduit (RNMC): All RNMC conduit shall be the following:
1. Schedule 40, rigid heavy wall polyvinyl chloride (PVC).

E. Flexible Metallic Conduit (Flex): Flex shall be either galvanized steel in exposed locations or aluminum where concealed and not subjected to damage. Flex is to be used only in dry locations.

F. Liquid-Tight Flexible Metallic Conduit (Liquid-Tight): Liquid-tight conduit shall be made up of interlocking steel spirals with a copper bonding tape and overall jacket of flexible PVC or other non-conducting moisture and oil-resistant jacket.

2.2 CONDUIT FITTINGS

A. General: All metallic conduit connectors shall incorporate an insulated throat bushing.

B. RMC, IMC: Fittings shall be galvanized malleable iron or copper-free cast aluminum (dry locations only). Unless otherwise approved, all fittings shall be threaded using standard NPT threads.

C. EMT: Fittings shall be galvanized malleable iron or stamped steel and made especially for the purpose. In dry locations, cast aluminum fittings may be used. In wet locations, compression fittings shall be used. Neither indenting type nor so-called "competitive" fittings shall be used.

D. Flex: Fittings shall be galvanized malleable iron or stamped steel, squeeze type. No fittings that thread into the cut end of flex will be approved.

E. Liquid-Tight: Fittings shall be galvanized malleable iron or stamped steel. Fittings shall provide positive seal against entrance of liquids by incorporating a nylon sealing ring and compression nut. Grounding and security against pullout shall be assured by a grounding ferrule, which is threaded into the conduit and seats tightly against the connector shoulder when the fitting is tightened.

F. RNMC: Fittings shall be applied by solvent welding, approved adhesive, heat-shrink sleeve or heat fusion as required by the Manufacturer and approval/listing agency. No internal beads or burrs shall remain after joining unless the bead can be shown to be smooth and will not impede installation of conductors.

2.3 WIRES AND CABLES

A. Conductor Material: Unless specifically noted or approved otherwise, all conductors shall be 100% IACS conductivity annealed copper. Conductors smaller than #10 AWG shall be solid. Conductors larger than #8 AWG and all conductors used for control circuit wiring shall be concentric lay stranded.

B. Building Wire and Cable (through 600 V): Building wire shall be used for branch circuit and control wiring. Insulation shall be Type THWN unless approved otherwise. Minimum size for branch circuit wiring shall be #12 AWG.

C. Grounding Conductors: Grounding conductors shall be copper. Annealed solid conductors may be used in sizes to #6 AWG unless indicated otherwise.

D. Connections and Terminations: All connections and terminations shall be made with solderless splicing devices, mechanical lugs or compression connectors.
   1. Power system conductors, #8 AWG and larger shall use properly sized mechanical lugs or compression fittings.
   2. Power system conductors #10 AWG and smaller shall be spliced using solderless splicing connectors utilizing a tension spring to maintain pressure on conductors. Fixed spring type twist-on connectors shall be used only for fixture connections. Terminations shall be made to mechanical lugs or screws and clamps on wiring devices.

PART 3 – EXECUTION

3.1 GENERAL

A. All conductors shall be installed in raceways.

3.2 EXAMINATION

A. Conduits and Fittings: Sections of galvanizing damaged during shipment and handling shall be heavily coated with cold galvanizing spray prior to installation. All RMC conduit threads shall be cut with a die having standard electrical thread taper of 3/4" per foot.

B. Wire and Cable: Conductors and cables shall be checked prior to and during installation to assure that the insulation is intact and not damaged.

3.3 PREPARATION

A. Conduit: All runs of conduit shall be clear of obstructions and adequately secured prior to beginning installation of conductors. All conduits installed underground or in poured concrete shall be swabbed with mandrel, brush and dry cloth before pulling.

3.4 INSTALLATION

A. Conduits:
1. Install RMC or IMC in all areas subject to damage from maintenance activities or vehicles from grade to 54" above finished floor or grade.
2. Install RNMC in areas below grade or in concrete unless otherwise indicated. Conduit shall be installed at least five feet away from the inside wall of a pool.
3. Install all other branch circuit and feeder conductors in EMT unless otherwise indicated.
4. Locate conduits so that the strength of structural members is not compromised. Engineer shall approve all drilling of structural members.
5. In poured concrete, conduit surfaces shall not be located less than 2" from edge of concrete. Conduits installed in or through reinforced beams, columns, or other structural members shall be approved by Engineer.
6. Conduits shall not have diameter greater than one-third the thickness of a pour nor shall spacing of conduits within such a pour be less than three diameters. Conduits shall be securely tied to reinforcing medium prior to concrete pouring.
7. Conduits installed in concrete or underground shall have manufactured raceway closures installed immediately after installation. Closures shall stay in place until conductors are pulled.
8. Conduit ells installed with RMC or RNMC conduit systems shall use factory made RMC bends where the bending radius is less than 5 feet. For runs exceeding 200 feet in length without pulling boxes or vaults, ells shall be long radius.

9. All conduits that penetrate walls or floors shall be sealed internally with an approved putty-like material to prevent the migration of moisture due to temperature differentials. Where penetrations are made through fire-rated walls and floors, such penetrations shall be grouted in or sealed with an approved fire blocking compound.

3.5 WIRES AND CABLES:

A. Installation of conductors and cables within conduits shall be done in accordance with Manufacturer's recommendations for maximum pulling tension and sidewall pressures.

B. Conductors on the load side of a ground-fault circuit interrupter for an underwater light fixture shall not occupy raceway, boxes, or enclosures containing other conductors.

GROUNDING AND BONDING

PART 1 – GENERAL

1.1 DESCRIPTION OF WORK

A. Work Included:
1. Properly ground switchboards, panelboards, conduit systems, cabinets, underwater light fixtures, motors, junction boxes, grounded circuit conductors, and metal fences in accordance with the latest issue of the National Electrical Code.
2. All metallic parts of the pool structure, forming shells and mounting brackets of no-niche light fixtures, metal fittings within or attached to the pool structure, metal parts of pool pump motors, and fixed metal parts within five feet of the pool walls and within 12 feet above the water level of the pool shall be bonded together in accordance with NEC 680-22a. These parts shall be connected together in a common bonding grid with a solid copper #8 conductor and be connected to ground.
3. Route grounding conductors to provide shortest and most direct path to ground electrode system. Install all ground conductors in conduit.

1.2 QUALITY ASSURANCE

A. Standards:
1. Underwriters Laboratories, Inc. (UL) 467-1972 (R 1975) Grounding and Bonding Equipment

PART 2 – PRODUCTS

2.1 CONNECTIONS

A. Shall be made using irreversible compression connectors manufactured by Burndy or exothermic welding manufactured by Cadweld or equal.

PART 3 – EXECUTION

3.1 GROUNDING OF RACEWAYS, STRUCTURES, AND EQUIPMENT

A. Provide a low-impedance ground return path from each piece of electrical equipment back to the building service ground bus.

3.2 RACEWAYS:

A. Boxes: Provide green grounding jumper from the ground screw to a box grounding screw or clip for all grounding type devices, using insulated wire,

unless UL approved self-grounding devices are used. Provide grounding jumper on all surface-mounted devices, regardless of type of device used.

B. Ground Wire: Provide a green bonding/grounding conductor in all conduits sized per the NEC Article 250. The conduit shall not be used as the sole means of grounding.

C. Pipes and Tanks: Connect equipment grounding conductors to pipes or tanks.

D. General Equipment: Make connections to equipment by means of factory installed lugs. If not provided, make connections within enclosures with approved lugs or connectors.

E. Motor Connections:
1. Use flexible conduit for motor connections. Provide an attached bare copper bonding jumper between the rigid steel conduit and the motor frame, using approved grounding fittings.
2. Motor mounting bolts may be used for connecting the equipment ground to the frame of motors smaller than 213 frame. For 213 frame and larger motors, the grounding connector shall be fastened beneath the head of an end shield bolt or by means of a 5/16 inch (minimum) bronze bolt tapped into a suitable place on the motor frame.

SUPPORTS AND FASTENINGS

PART 1 – GENERAL

1.1 DESCRIPTION

A. Work Included: Provision and installation of supports and fastenings for properly mounting and anchoring all raceways, equipment, and fixtures.

PART 2 – PRODUCTS

2.1 STEEL SUPPORTS

A. Provide brackets, frames, and hangers fabricated from standard rolled structural steel shapes or prefabricated structural system manufactured by one of the following:
1. Kindorf Electrical Products Company
2. Powerstrut Division/Van Huffel Tube Corporation
3. Unistrut Corporation

B. Provide threaded steel rods, where required, 3/8 inch diameter. Use hot dip galvanized steel on installations exposed to the weather. Do not use chain except where detailed or specifically required. Do not use perforated strap or wire.

2.2 FASTENINGS: PROVIDE NECESSARY FASTENINGS IN ACCORDANCE WITH THE FOLLOWING:

A. Bolts and nuts: ANSI regular series, semi-finished, hexagon, galvanized.

B. Lock washers: ANSI medium, spring type, galvanized.

C. Beam clamps: Thompson beam and angle clamps.

D. Wall anchors: Use 3/8 inch toggle bolts in hollow tile and concrete block. Use 3/8 inch taper plug drive anchors in solid masonry and concrete. Do not use fiber, lead, or wood plugs; do not use expansion shields and lag bolts.

PART 3 – EXECUTION

3.1 INSTALLATION

A. Steel Supports: Fabricate and install supports so that support installation does not weaken or overload the building structure. Do not impose the weight of electrical equipment, raceways, or fixtures on supports provided for other trades or systems.

CABINETS AND BOXES

PART 1 – GENERAL

1.1 DESCRIPTION OF WORK

A. Work Included: Provision and installation of cabinets and boxes as required by other sections.

1.2 QUALITY ASSURANCE

A. Coordinate locations with work of other trades to avoid conflicts with equipment and structure.

B. Standards:Underwriters Laboratories, Inc. (UL)

PART 2 – PRODUCTS

2.1 CABINETS

A. Construction - Code-gauge sheet steel with hinged and gasketed door for flush or surface mounting as indicated on drawings.

B. Finish - Baked-on gray enamel, ANSI-61

C. Enclosure Rating - as follows:
1. NEMA 1 - Indoor, office/general areas.
2. NEMA 3R or 4 - Damp or outdoor locations.

2.2 JUNCTION AND PULL BOXES

A. Construction - Welded and galvanized sheet steel of sizes required by N.E.C.

B. Sheet steel gage requirements:
1. 14 USS gage.

C. Enclosure ratings:
1. NEMA 1 - Indoor, Office/ general areas.
2. NEMA 3R or 4 - Damp or outdoor areas.

2.3 OUTLET BOXES

A. Size as required by code. Allow extra space when splicing.

B. Full access screwed covers mounted with corrosion resistant machine screws.

C. Stamped steel with appropriate plaster rings for flush mounting.
   1. Size for outlets including gang requirements.
   2. Size for conductors and allowed space fill by code.
   3. Corrosion resistant machine screws for covers and plaster rings.

2.4 UNDERWATER LIGHT JUNCTION BOXES

A. Brass cover and base with three tapped holes per side for conduit entry.

B. Model #1719 manufactured by Hydrel or equal.

C. Cord strain relief provided.

PART 3 – EXECUTION

3.1 CABINETS

A. Mount rigidly and with proper alignment on building structure with top of cabinet not to exceed 6 feet 6 inches above finished floor.

B. Close all unused cabinet openings.

3.2 JUNCTION AND PULL BOXES

A. Locate so that covers are accessible at all times. Mount boxes for concealed conduit so covers are flush with surface of finished ceiling or wall.

B. Contractor shall provide pull boxes as required by codes to facilitate installation of work.

C. Provide rigid mounting per good standard practice using brackets, rod hangers, bolts, and expansion bolts.

D. Support independent of attached conduit unless otherwise indicated.

3.3 OUTLET BOXES

A. Verify location of all outlets prior to rough-in. Unless otherwise noted, mount outlets at the following heights from finished floor to center line of outlet:
   1. Wall switches: 48 inches
   2. General outlets: 20 inches

IDENTIFICATION

PART 1 – GENERAL

1.1 DESCRIPTION OF WORK

A. Provide proper identification of all electrical equipment and wiring installed under this division.

1.2 WORK INCLUDED:

A. Nameplates on all electrical and special systems equipment enclosures.

B. Color coding of all electrical conductors.

C. Labeling of all conductors used for control or instrumentation.

D. Installation of panel schedules for branch circuit panelboards.

PART 2 – PRODUCTS

2.1 MANUFACTURERS

A. In general, conduit and wire marking tape as manufactured by Brady, Thomas & Betts, 3M, and Panduit will be acceptable.

2.2 NAMEPLATES

A. For all switchboards, panelboards, motor control centers, and major system components provide each with a master nameplate as follows:

B. Nameplates shall be 1/16" thick laminated phenolic plastic with black surface and white base.

C. Equipment identification shall consist of two lines:
1. Equipment designation (e.g., "MDP") in 1/2" high capital letters.
2. Equipment operating voltage (e.g., "208Y/120 VAC") in 3/8 high letters/numbers.

D. For feeder distribution overcurrent devices within switchboards or panelboards, motor starters, individual motor circuit and other disconnects, similar nameplates shall indicate equipment supplied in 1/4" high characters on a single line (e.g., "LP1").

E. For other cabinets and enclosures, similar nameplates shall indicate equipment designation as shown on the drawings with 3/8" high letters on one line.

F. All nameplates shall be of a size dictated by the above requirements with a minimum 1/8" space between lines and 1/4" margin on all sides.

2.3 CONDUCTOR LABELING:

A. Control systems wiring in conjunction with mechanical, lighting, or miscellaneous control equipment shall be identified at each terminal as to the conductor designation indicated on schematic drawings and terminal identification of opposite end (e.g., "101 TB3:18"). Refer to control elementary and wiring diagrams.

B. Wire markers shall be permanent and secure. Acceptable products are Brady "Bradysleeve" and T&B "E-Z Coder."

2.4 PANELBOARD DIRECTORIES

A. Branch circuit panelboard directories shall be neatly typed and inserted behind a clear protective plastic cover behind the panel door. For each circuit, define nature of load and location. Abbreviations must be clear and consistent with drawings.

B. Circuit number for all branch circuit panelboards shall be with odd numbers left and even numbers right. Each pole shall be consecutively numbered and multi-pole breakers shall be given the number of the top-most pole.

PART 3 – EXECUTION

3.1 LABELS

A. Securely attach engraved labels with an approved epoxy adhesive.

WIRING DEVICES

PART 1 – GENERAL

1.1 DESCRIPTION OF WORK

A. Work Included: Provide all required wiring devices as shown on drawings.

1.2 QUALITY ASSURANCE

A. All wiring devices shall be new, approved or listed, and rated for the service for which they are to be used.

B. Standards: Underwriters Laboratories, Inc. (UL)

C. Manufacturers: Leviton, Hubbell, Pass & Seymour

PART 2 – PRODUCTS

2.1 SWITCHES - SIDE AND BACK WIRED

A. Specification grade 20A, 120 VAC, ivory in finished spaces and gray in unfinished spaces.

2.2 RECEPTACLES

A. General Outlets:
1. Specification grade duplex, side or back wired, 20A, 125V, NEMA 5-20R, grounding-type, screw terminals only, ivory in finished spaces and gray in unfinished spaces.

2.3 GROUND-FAULT CIRCUIT INTERRUPTER OUTLETS:
1. Specification grade duplex, back and side wired, 20A, 125V, NEMA 5-20R, grounding-type, weather resistant, automatic testing feature such that device will not reset if the GFCI circuit is malfunctioning, ivory in finished spaces and gray in unfinished spaces.

2.4 DEVICE PLATES

A. Provide cover plates suitable for location and environment and as follows:
1. Finished spaces: High-impact plastic, ivory.
2. Unfinished spaces: Heavy Duty Areas: raised steel or stamped steel for flush wiring.

B. Exterior and Damp Areas: Weatherproof, cast aluminum, self-closing flap to open in upward direction.

C. Lockable Wall Plates: Weatherproof, stainless steel or heavy cast aluminum, flush, cam lock, two keys provided, with mounting plate for GFCI duplex receptacle, Pass & Seymour #4600-8 or equal.

PART 3 – EXECUTION

3.1 WIRING DEVICE INSTALLATION

A. Receptacle Grounding: Connect each receptacle to assure positive connection to ground.

B. Receptacles shall be located at least 10 feet from the inside walls of a pool.

C. Receptacle mounting height shall be 18” above finished floor unless noted otherwise.

D. Switch mounting height shall be 40” above finished floor unless noted otherwise.

MOTOR AND CIRCUIT DISCONNECTS

PART 1 – GENERAL

1.1 DESCRIPTION OF WORK

A. Work Included: Provision and installation of safety and disconnect switches, individually enclosed or applied in combination with motor controllers, where shown on electrical drawings.

1.2 QUALITY ASSURANCE

A. Standards:
1. Underwriters Laboratories, Inc. (UL)
a. 98-1980 Switches, enclosed
2. Applicable ANSI, NEMA, and IEEE standards

PART 2 – PRODUCTS

2.1 GENERAL:

A. Provide enclosed heavy duty, fusible/nonfusible safety and disconnect switches where indicated and as specified. Ratings shall be appropriate for the load served. Switches used as service-entrance equipment shall be UL-labeled as such.

2.2 ADDITIONAL REQUIREMENTS: PROVIDE EACH SWITCH WITH THE FOLLOWING:

A. Quick-make, quick-break, interrupter operating mechanism.

B. Handle where the position is easily recognizable and can be multiple padlocked in the "OFF" position.

C. Defeatable door interlocks that prevent the door from opening when the operating handle is in the "ON" position.

D. Factory installed ground lug.

E. Use horsepower rated switches on motor circuits.

2.3 ENCLOSURES: PROVIDE ENCLOSURES IN ACCORDANCE WITH THE FOLLOWING SCHEDULE:

A. NEMA 1 - general indoor and dry areas.

B. NEMA 3R - gasketed for damp or outdoor locations.

PART 3 – EXECUTION

3.1 INSTALLATION

A. Mount switches at locations shown on plans and as follows:
   1. Fasten securely to supporting structure at walls and stands:
      a. Machine bolt to metal framing or plates
      b. Expansion anchors to concrete walls

B. Stands and supports:
   1. Corrosion-resistant materials and finishes.
   2. Unistrut-type materials for fabrication.
   3. Expansion anchors for bolts in concrete floor.
   4. Machine bolt to metal framing or plates.
   5. Backing plate for mounting units.
   6. Fasten stand securely to floor.

C. Mounting height:
   1. Single unit, 4 feet 6 inch centerline above floor.
   2. Multiple units:
      a. (1) In horizontal line uniform top height. Top of highest enclosure not exceeding 6 feet 6 inches.

MOTOR CONTROLLERS

PART 1 – GENERAL

1.1 DESCRIPTION OF WORK

A. Work Included: Provide under this division where shown on electrical drawings

1.2 QUALITY ASSURANCE

A. Standards:
1. Underwriters Laboratories, Inc. (UL)

PART 2 – PRODUCTS

2.1 MOTOR CONTROLLERS

A. General: Provide each motor with a suitable NEMA size controller or device complete with manual or magnetic control, as required.

B. Provide magnetic motor starters with ambient compensated thermal overload protection set at 115 percent measured full load current in each ungrounded phase, with maintenance-free, double-break, solid silver cadmium oxide alloy contacts.
1. Provide starters designed to prevent freezing of contacts upon coil failure, possible to install auxiliary contacts without removing starter from its enclosure.
2. Arrange control circuits for manual, auto, and other signal inputs from control circuits and arrange control power to de-energize control circuits whenever operating power supply to particular equipment is disconnected.

C. Combination magnetic starter and disconnect switch, unless otherwise specified, with the following features:
1. Across-the-line start
2. Contacts self-cleaning type designed for easy inspection and replacement.

D. Control circuit transformer with 120VAC fused secondary.
1. Pilot devices on controller door:

E. Hand-Off-Auto selector switch.

F. Motor running - red light.

G. Reset button.
1. Two normally-open auxiliary contacts.

H. Safety disconnect handle on cover. (Padlockable)

I. Manual toggle switch type, single-phase, rated for horsepower of motor.

PART 3 – EXECUTION

3.1 INSTALLATION

A. Individually Mounted Units: at locations shown on plans
   1. Fasten securely to supporting structure at walls and stands:
      a. Machine bolt to metal framing or plates.
      b. Expansion anchors to concrete walls.
   2. Stands and Supports:
      a. Corrosion-resistant materials and finishes.
      b. Unistrut-type materials for fabrication.
      c. Expansion anchors for bolts in concrete floor.
      d. Machine bolt to metal framing or plates.
      e. Backing plate for mounting units.
   3. Mounting height:
      a. 4 feet 6 inch centerline above floor.

END OF SECTION

SECTION 13 31 23

PRE-ENGINEERED FABRIC SHADE STRUCTURES

PART 1 – GENERAL

1.1 RELATED DOCUMENTS

A. Drawings and general provisions of the Contract, including General Conditions and Division 1 Specification Sections, apply to this section.

1.2 SUMMARY

A. A single, State of California-licensed fabric shade structure contractor shall be responsible for the design, wet-stamped engineering drawings, permitting, fabrication, supply, and erection of the work specified herein, including foundations. The intent of this specification is to have only one shade contractor be responsible for all of the functions listed above.

1.3 SUBMITTALS

1.3.1 With Bid Submittals:

A. Provide proof of existing reference sites with structures of similar project scope and scale, and that are engineered to CBC 2019 specifications.

B. Provide a minimum of 7 fabric samples to demonstrate fabric color range, and a digital (PDF) or paper document showing a minimum of 9 powder coat color choices. Also, provide a letter of authorization from the fabric manufacturer delineating authorized use of the specified fabric.

C. Provide proof of all quality assurance items, including;

1. A list of at least 3 reference projects in California that have been installed a minimum of 12 years.
2. Proof of General Liability, Professional Liability, and Umbrella insurance, as per Section 1.4B.
3. Proof of current State of California Contractor’s License, Class A or Class B.
4. Proof of current City of Los Angeles Approved Fabricator license.
5. Proof of a minimum of $6,000,000 aggregate bonding capacity.
6. Proof of current IAS certification, as per Section 1.4D.
7. Proof of an Annual Maintenance Inspection Program.
8. Proof of a Corporate Safety and/or Injury & Illness Prevention Program.

1.4 QUALITY ASSURANCE

Fabrication and erection are limited to firms with proven experience in the design, fabrication, and erection of fabric shade structures, and such firms shall meet the following minimum requirements. No substitutions shall be allowed for the following:

A. A single shade structure contractor shall design, engineer, manufacture, and erect the fabric shade structures, including the foundations, and shall provide a dedicated Project Manager throughout the entire Scope of Work related to the shade structure(s).

B. All bidders shall have at least 15 years' experience in the design, engineering, manufacture, and erection of fabric shade structures, engineered to California Building Code requirements with similar scope, and a successful construction record of in-service performance.

C. All bidders shall provide proof with bid submittal of a minimum of $1,000,000 General/Public Liability insurance, $3,000,000 Professional Liability (PL) insurance, and additional $5,000,000 Umbrella/Excess Liability insurance.

D. All bidders shall be a currently licensed contractor in the State of California, and shall provide proof of a minimum aggregate bonding capacity of $6,000,000 with bid.

E. Manufacturer shall have a City of Los Angeles Approved Fabricator license and be accredited by the IAS (International Accreditation Service) for Structural Steel Fabrication under CBC 2016, Section 1704.2.5.2.

F. The fabric shade structure contractor shall have a Corporate Quality Control program (manual), which describes their complete quality assurance program.

G. All bidders must be a current Member Contractor with ISNetworld, which confirms the bidder's strict adherence to Safety, Insurance, Quality, and Regulatory standards.

1.5 PROJECT CONDITIONS

A. Field Measurements: Verify layout information for fabric shade structure(s) shown on the drawings in relation to the property survey and existing structures, and verify locations by field measurements prior to erection of the fabric shade structure(s).

1.6 WARRANTY

A. The successful bidder shall provide a 12-month warranty on all labor and materials.

B. A supplemental warranty from the manufacturer shall be provided for a period of 10 years (pro-rated) on fabric and 10 years on the structural integrity of the steel, from date of substantial completion.

C. The warranty shall not deprive the Owner of other rights the Owner may have under the provisions of the Contract Documents, and will be in addition to and run concurrent with other warranties made by the Contractor under requirements of the Contract Documents.

PART 2 – PRODUCTS

2.1 GENERAL

A. The structures shall consist of Joined Full Cantilever Hip structures that measure 65 ft x 16 ft overall with a 15 ft entry height and (5) Full Cantilever Hip structures that measure 18 ft x 14 ft each with a 10 ft entry height.

B. The structures shall be manufactured by Shade Structures, Inc., d/b/a USA SHADE & Fabric Structures, or approved equal that includes the engineering drawings, fabric roof, steel cables, all fasteners, and erection of structure(s), including foundations.

C. Contact: USA SHADE & Fabric Structures
1085 N. Main Street, Suite C

Orange, CA 92867

Phone: 949-929-8173

Attn: Devin Christensen

devin.christensen@usa-shade.com

D. To qualify as an approved equal, please submit product documentation, fabric samples, and all quality assurance criteria, as per Section 1.4, at least 10 days prior to bid in order to be considered. No substitutions will be allowed after the deadline. Any approval of alternate manufacturers shall be by addendum prior to the bid date and shall not be allowed without written notification.

E. The fabric shade structure(s) shall conform to the current adopted version of the California Building Code 2019

F. All fabric shade structures are designed and engineered to meet the minimum of 110mph Wind Load, Risk Category II, Exposure C, and Seismic (earthquake) Load based on Seismic Design Category D, Seismic Risk Category II, and a Live Load of 5psf. All fabric shade structures shall be engineered with a zero wind pass–through factor on the fabric. When ASD Steel Design Method is used based on CBC 2013 Section 1605A.3.1, the load combinations Dead Load + 0.75 Live load + 0.75 Wind Load, and 0.6 Dead Load + Wind Load must be analyzed. NO EXCEPTIONS.

G. Steel:

1. All steel members of the fabric shade structure shall be designed in strict accordance with the requirements of the “American Institute of Steel Construction” (AISC) Specifications and the “American Iron and Steel Institute” (AISI) Specifications for

Cold-Formed Members and manufactured in a IAS- (International Accreditation Service) accredited facility for Structural Steel Fabrication under CBC 2019 Section 1704.2.5.2.

2. All connections shall have a maximum internal sleeving tolerance of .0625” using high-tensile strength steel sections with a minimum sleeve length of 6”.

3. All non-hollow structural steel members shall comply to ASTM A-36. All hollow structural steel members shall be cold-formed, high-strength steel and comply with ASTM A-500, Grade C. All steel plates shall comply with ASTM A-572, Grade 50. All galvanized steel tubing shall be triple-coated for rust protection using an in-line electroplating coat process. All galvanized steel tubing shall be internally coated with zinc and organic coatings to prevent corrosion.

H. Bolts:

1. All structural field connections of the shade structure shall be designed and made with high-strength bolted connections using ASTM A-325, Grade B or SAE J249, Grade 8.

2. Where applicable, all stainless steel bolts shall comply with ASTM F-593, Alloy Group 1 or 2. All bolt fittings shall include rubber washers for water-tight seal at the joints. All nuts shall comply with ASTM F-594, Alloy Group 1 or 2.

I. Welding:

1. All shop-welded connections of the fabric shade structure shall be designed and performed in strict accordance with the requirements of the “American Welding Society” (AWS) Specifications. Structural welds shall be made in compliance with the requirements of the “pre-qualified” welded joints, where applicable and by certified welders. No onsite or field welding shall be permitted.

2. All full penetration welds shall be continuously inspected by an independent inspection agency and shall be tested to the requirement of 2019 CBC.

J. Powder Coating:

1. Galvanized steel tubing preparation prior to powder coating shall be executed in accordance with solvent cleaning SSPC-SP1. Solvents such as water, mineral spirits, xylol, and toluol, which are to be used to remove foreign matter from the surface. A mechanical method prior to solvent cleaning, and prior to surface preparation, shall be executed according to Power Tool Cleaning SSPC-SP3, utilizing wire brushes, abrasive wheels, needle gun, etc.

2. Carbon structural steel tubing preparation prior to powder coating shall be executed in accordance with commercial blast cleaning SSPC-SP6 or NACE #3. A commercial blast cleaned surface, when viewed without magnification, shall be free of all visible oil, grease, dirt, mill scale, rust, coating, oxides, corrosion, and other foreign material.

3. Powder coating shall be sufficiently applied (minimum 3 mils thickness) and cured at the recommended temperature to provide proper adhesion and stability to meet salt spray and adhesion tests, as defined by the American Society of Testing Materials.

4. Raw powder used in the powder coat process shall have the following characteristics:
   a. Specific gravity: 1.68 +/- 0.05
   b. Theoretical coverage: 114 +/- 4ft^2/mil
   c. Mass loss during cure: <1%
   d. Maximum storage temperature: 80^oF
   e. Interpon® 800 is a high-durability TGIC powder coating designed for exterior exposure. Tested against the most severe specifications, Interpon® 800 gives significantly improved gloss retention and resistance to color change.

5. When the fabric shade structure(s) will be located within 15 miles of the ocean or standing body of water, rust protection undercoat primer will be required on all structures. Sherwin-Williams® POWDURA® epoxy powder coating Z.R Primer shall be applied in accordance with the manufacturer's specifications. Primer should be fused only and then top coated with the selected powder coat to ensure proper inter-coat adhesion.

   a. The primer's attributes shall be:

a.	Specific gravity (g/ml):	2.37
b.	Coverage at 1.0 mil (ft^2/lb):	81.6
c.	Adhesion: ASTM D-3359	5B
d.	Flexibility: ASTM D-552	Pass 1/8"
e.	Pencil hardness: ASTM D-3363	H-2H
f.	Impact resistance (in.lb): ASTM D-2794	Dir & Rev, 120 in-lbs
g.	Salt spray resistance: ASTM B-117	2000 hours
h.	Humidity resistance: ASTM D-4585	2000 hours
i.	60° Gloss: ASTM D-523	50 ~ 70
j.	Cure schedule (metal temp):	10min @ 200°C (390°F) 25min @ 135°C (275°F)
k.	Film thickness tange (mils):	2.0 ~ 3.0

K. Tension Cable: Steel cable is determined based on calculated engineering loads.

1. For light and medium loads, 0.25" (nominal) galvanized 7x19 strand cable shall be used.

2. For heavy loads, and depending on structural size, either 0.375" (nominal) or 0.5" (nominal) galvanized 7x19 strand cable shall be used.

L. Fabric Roof Systems:

1. UV Shade Fabric:
   a. Fabric to be Commercial NinetyFive 340 FR manufactured by Gale Pacific.
   b. Fabric Properties:

~ Life Expectancy: minimum 8 years with continuous exposure to the sun

~ Fading: minimum fading after 5 years (3 years for Red)

~ Fabric Mass: 5.31 oz/yd^2 ~ 5.6 oz/yd^2 (180gsm ~ 190gsm)

~ Fabric Width: 9.8425 feet (3m)

~ Roll Length: 164.04 feet (50m)

~ Roll Dimensions: 62.99 inches x 16.5354 inches (160cm x 42cm)

~ Roll Weight +/- 66 lbs (+/- 30kg)

~ Minimum Temp: -13°F (-25°C)

~ Maximum Temp: +176°F (80°C)

c. Fabric shall meet the following flame spread and fire propagation tests:
   1) ASTM E-84
   2) NFPA 701 Test Method 2
   3) California's Office of the State Fire Marshal, Registered Flame Resistant Product

2. Stitching & Thread:
   a. All sewing seams are to be double-stitched.
   b. The thread shall be GORE® TENARA® mildew-resistant sewing thread, manufactured from 100% expanded PTFE (Teflon™). Thread shall meet or exceed the following:
      1) Flexible temperature range
      2) Very low shrinkage factor
      3) Extremely high strength, durable in outdoor climates
      4) Resists flex and abrasion of fabric
      5) Unaffected by cleaning agents, acid rain, mildew, salt water, and is unaffected by most industrial pollutants
      6) Treated for prolonged exposure to the sun
      7) Rot resistant

3. Shade and UV Factors:
   a. Shade protection and UV screen protection factors shall be as follows:

Color	UV Block %	Shade %
Pacific Blue	85%	80%~86%
Rain Forest Green	85%	79%~86%
Red	86%	80%~83%
Silver	81%	80%~85%
Desert Sand	92%	80%~84%
Terracotta	82%	80%~83%
Yellow	89%	80%~82%

PART 3 – EXECUTION

3.1 INSTALLATION

A. The installation of fabric shade structures shall be performed by manufacturer or manufacturer-approved contractor, which shall be bonded and holding a current contractor's license with the State of California's Contractors State License Board. All installation personnel must have experience in the erection of tensioned fabric structures.

B. The installation shall comply with the manufacturer's instructions for assembly, installation and erection, per approved drawings.

C. Concrete:

1. Unless noted otherwise for footings and piers by the Project Engineer, the concrete specification for footings and/or piers shall meet a minimum 3,500psi at 28-day strength.

2. Concrete work shall be executed in accordance with the latest edition of American Concrete Building Code ACI 318-99.

3. Concrete specifications shall comply in accordance with the Section 03300 Cast-in-Place Concrete, detailed as per plans, and shall be as follows:
   a. 28 Days Strength F'c = 3000 psi
   b. Aggregate: HR
   c. Slump: 3 ~ 5 inch
   d. Portland Cement shall conform to C-150
   e. Aggregate shall conform to ASTM C-33

4. All reinforcement shall conform to ASTM A-615 grade 60.

5. Reinforcing steel shall be detailed, fabricated, and placed in accordance with the latest ACI Detailing Manual and Manual of Standard Practice.

6. Whenever daily ambient temperatures are below 80 degrees Fahrenheit, the contractor may have mix accelerators and hot water added at the batch plant (See Table 1).

7. The contractor shall not pour any concrete when the daily ambient temperature is to be below 55 degrees Fahrenheit.

TABLE 1

Temperature Range	% Accelerator	Type Accelerator
75~80 degrees F	1%	High Early (non calcium)
70~75 degrees F	2%	High Early (non calcium)
Below 70 degrees F	3%	High Early (non calcium)

D. Foundations:

1. All anchor bolts set in new concrete shall comply with ASTM F-1554 Grade 55 (Galvanized).

2. All anchor bolts shall be Hot-Dip Galvanized.

3. Footings and full rebar cages shall be drilled, set, and poured as per manufacturer's specifications.

END OF SECTION 13 31 23

SECTION 13 34 16

PERMANENT GRANDSTANDS

PART 1 - GENERAL

1.01 SYSTEM DESCRIPTION

A. Provide labor, material, equipment, and supervision necessary to complete installation of permanent steel grandstand, including the following:

1. Steel Substructure
2. Decking System
3. Concrete Foundation

1.02 QUALITY ASSURANCE

A. Manufacturer Qualifications: Manufacturers must have ten years of experience in the manufacture of bleachers and grandstands; manufacturer must exhibit proof of business existence for the past five years with documentation; welders must be AWS certified.

B. Installer Qualifications: Experienced in the proper installation of grandstands.

C. Source Quality Control: Mill Test Certification.

1.03 SUBMITTALS

A. Manufacturer's Product Data: Submit manufacturer's descriptive product data for project.

B. Shop Drawings: Manufacturer to submit shop drawings sealed by a California registered engineer and shall be of sufficient clarity to indicate the location, nature and extent of the work proposed and show in detail that it will conform to the applicable code and relevant laws.

C. Product Sample: Submit one 18-inch seat sample.

D. Color Sample: If applicable, submit sample.

1.04 SITE CONDITIONS

A. Field Site:

1. Owner to make site accessible.
2. Owner to verify site locations, benchmarks.

B. Underground Utility Line: Owner to clearly mark all underground utilities and obstructions and Owner to relocate all that conflict with grandstand.

C. Soil Test: Furnished by Owner.

1.05 BUILDING CODES

A. Must meet or exceed all State and Local applicable codes and in compliance with the California Building Code, Title 24, and ICC 300.

1.06 WARRANTY

A. Permanent Grandstand shall be under warranty for a period of one (1) year beginning at date of substantial completion of the projects. The warranty will provide for repair or replacement of failed components due to defect in materials and workmanship of installation for the specified period. This warranty excludes any other defects resulting from abnormal use in service, vandalism, weathering, oxidation, accidental or intentional damage or any occurrences beyond Manufacturer's control.

1.07 MAINTENANCE

A. Owner is to conduct annual inspection and required maintenance of grandstand to assure safe conditions. It is also recommended that a professional engineer or registered architect perform inspections biennially.

PART 2 - PRODUCTS

2.01 ACCEPTABLE MANUFACTURERS

A. Southern Bleacher Company (800) 433-0912. Leg-Truss System.

1. Alternate manufacturers seeking to be pre-approved to bid must submit product literature and references (with contact names/numbers/email addresses) to the Owner/Architect, 14 days prior to bid date, for five similar size DSA approved projects completed in the past two years.

2.02 PERMANENT STEEL GRANDSTAND

A. Product Description

1. Leg Truss Permanent Grandstand Design

a. Gross seating capacity of 252, net seating capacity of 196 including 5 wheelchair spaces, 6 rows, and 63’ long.

2. Vertical columns are placed 6’ on center laterally, and as required on center front to back.

3. Stringers: Stringers are wide flange with steel angle rise and depth fabrication and are placed at 6’ on center.

4. Aisles:

   a. Aisles with seating on both sides to have discontinuous mid-aisle handrails. The handrails shall be discontinuous with breaks at intervals not to exceed five rows. These breaks shall have a clear width of at least 22 inches and not greater than 36 inches horizontally.

   b. Anodized aluminum handrails with rounded ends to be provided with an intermediate handrail below the main handrail.

   c. Aluminum tread nosing of contrasting color on aisle steps.

   d. Half-steps shall be provided for riser heights above 8 inches.

   e. Half-steps shall provide equal rise and run throughout aisle. Each shall have aisle nosing with non-skid black powder coated finish or other paint system meeting AAMA 603.8-92 specifications with a hardness rating of 2H and riser closure with clear anodized finish.

   f. Aisles with a riser height of non-uniformity shall be indicated with distinctive markings as required by code.

5. Decking:

   a. Rise/Tread Depth per row: 12” and 24”

   b. Each seat 17 inches above its respective tread.

   c. Mill Aluminum Decking Arrangement
      (1) Tongue-and-Groove System Closed Deck

   d. Seating Selection
      (1) Anodized Aluminum Bench Seat- 2 x 10 (standard), Die #7758 with height of 1 1/2".

   e. Flat anodized riser boards at each vertical row riser and half-step

7. Guard railing: To be at all sides of bleacher, entry stairs and ramps, portals, and landings. Railing to be anodized aluminum with end plugs at ends of straight runs and/or elbows at corner. All guardrails shall be secured to angle rail risers by galvanized fasteners. Railing shall be at heights as required by code for its location on the grandstand. Guard railing shall include intermediate railing, or galvanized chain link fencing fastened in place with galvanized fasteners and aluminum ties. Across rear of entire bleacher, a Dur-kyn finish riser board vision barrier shall be provided to extend 48” above top row seat height.

8. Handicap provision:

   a. Quantity of wheelchair spaces: 5

   b. Riser area adjacent to wheelchair spaces to have closed intermediate construction.

B. Materials/Finishes

1. Substructures:

a. Structural shapes meet one of the following ASTM specifications: A36, A36/A572 grade 50, A572 grade 50, A529-50, or A500 grade B.

b. Shop connections are seal welds.

c. After fabrication, all steel is hot-dipped galvanized to ASTM-A-123 specifications.

e. Painted steel finish is unacceptable.

2. Extruded Aluminum:

a. Seat Planks, Stanchions, and Railing are extruded aluminum alloy, 6063-T6.
(1) Clear anodized 204R1, AA-M10C22A31, Class II finish
b. Tread planks are extruded aluminum alloy 6063-T6 mill finish.
c. Riser boards are flat anodized finish
d. Railing: Extruded aluminum alloy, 6063-T6 clear anodized 204R1, AA-M10C22A31, Class II.

3. Accessories:

a. Channel End Caps: Aluminum alloy 6063-T6, clear anodized 204R1, AA-M10C22A31, Class II.

b. Hardware:

(1) Bolts, Nuts: Hot-dipped galvanized or mechanically galvanized.

(2) Hold-down Clip Assembly: Aluminum alloy 6005A-T6, mill finish.

(3) Structural Hardware: Equal to or greater than hot-dipped galvanized ASTM-A307. No connections utilizing high strength bolts are classed as slip critical.

d. Aisle Nose and Stair Nose: Aluminum alloy, 6063-T6, non-skid black powder coated finish or other paint system meeting AAMA 603.8-92 specifications with a hardness rating of 2H.

C. Fabrication:

1. Design Load:

a. Tread and Seat Area: 100 psf uniform live load.

b. Seat (Vertical): 120 lbs/lf.

c. Seat (Horizontal Sway): 24 lbs/lf parallel and 10 lbs/lf perpendicular to seat.

d. Handrail and Guardrail: 50 lbs/lf in any direction.

e. Handrail and Guardrail: 200 lbs concentrated in any direction.

f. Snow Loads: As per State adopted code.

g. Wind Loads: As per State adopted code.

h. Seismic Loads: As per State adopted code.

2. All manufactured connections to be shop welded.

a. Manufactured by certified welders conforming to AWS Standards.

PART 3 - EXECUTION

3.01 INSTALLATION

A. All work performed by technicians experienced in bleacher seating installation.

B. Project as per approved shop drawings.

3.02 FIELD QUALITY CONTROL

A. Foundation: Footings for the grandstand shall provide sufficient bearing area at bottom to support all loads of the grandstand. Depth and design of footings shall be determined by Owner supplied soil test. Hot-dipped galvanized anchor bolts shall be secured in the concrete footings. Concrete shall attain working strength of 3,000 psi.

3.03 CLEAN-UP

A. Clean up all debris caused by work of this section.

B. The Owner, Architect and Contractor acknowledge and accept that mill finish aluminum as specified will have water stains present from transportation and storage during installation. Removal of these stains is not part of this contract.

C. Stand to be broom cleaned at completion.

SECTION 14 24 00

HYDRAULIC ELEVATORS

PART 1 - GENERAL

1.1 SUMMARY

A. Section Includes: Provide holeless type hydraulic elevator system including guide rails, brackets, cylinders, hydraulic fluid reservoir, pit buffers, hardware, and accessories as required for complete operational system.

B. Related Sections:

1. Section 05 50 00: Metal fabrications such as elevator pit ladders, pit gratings, elevator shaft screens, sill angle supports, and metal fabrications sized on Architectural Drawings.

2. Section 09 30 00: Tiling for elevator cab floors.

3. Section 09 68 00: Carpeting for elevator cab floors.

4. Division 22: Pit drainage.

5. Division 26: Electrical power to Machine Room, including main switch, breaker and lighting.

1.2 REFERENCES

A. American National Standards Institute, ANSI A17.1: Safety Code for Elevators, Dumbwaiters and Escalators, and Moving Walks.

B. ANSI C1/NFPA 70: National Electrical Code.

C. ANSI A17.2: Practice for the Inspection of Elevators, Escalators and Moving Walks.

D. AWS D1.1: Structural Welding Code.

E. California Code of Regulations Title 24, Part 7, Elevator Safety Regulations, and California Building Standards Code regulations for elevators accessible to persons with disabilities and ambulance gurney access.

F. Americans with Disabilities Act (ADA) Standards.

1.3 ADMINISTRATIVE REQUIREMENTS

A. Design/Build: Provide special elevator design and engineering to ensure compliance with applicable codes and Contract Documents.

B. Coordination: Coordinate elevator work with other work to ensure full compliance with applicable codes and Contract Documents by work performed by others.

1. Review construction documents to assure necessary spaces and materials for legal elevator service are being provided under other sections.

2. Ensure proper fused disconnect switches, hoistway, pits, and machinery room with access, lighting, communications, ventilation and services are being provided under other sections.

3. Inform Architect of any discrepancies and omissions during bid period.

4. Work of this Section includes furnishing items necessary for a complete operational elevator system and not provided elsewhere.

C. Pre-Installation Meeting: Convene not less than one week prior to commencing work of this Section. Require attendance of those directly affecting work of this Section.

1. Review installation procedures and coordination required with related work.

1.4 SUBMITTALS

A. Product Data: Submit descriptive brochures or detail drawings of landing buttons, hall fixtures, car position indicators, car operating panels, car interior and hoistway doors and frames for review.

1. Wiring Diagrams: Furnish complete diagrams for elevator system.

B. Shop Drawings: Indicate space requirements, general arrangement of elevator equipment, and material being supplied.

1. Show connections, attachments, reinforcing, anchorage and location of exposed fastenings, and location of loads and reactions to be carried on building structure.

C. Samples: Submit samples of finishes, operating and signal system fixtures, samples of each type of sign or graphics provided, and finish of hoistway entrances and doors.

D. Design/Build Certificates: Submit certification signed by manufacturer indicating design/build compliance with Contract Documents and code requirements.

1.5 QUALITY ASSURANCE

A. Installer Qualifications: Elevator manufacturer or firm approved by elevator manufacturer in writing and with minimum five years successful experience installing elevators like to those required for Project.

1.6 DELIVERY, STORAGE, AND HANDLING

A. Deliver items and materials to site only after area in which they are to be installed is ready to receive them in their place of final installation.

B. Store materials in storage area allotted.

C. Fully protect movable and operating equipment from weather.

1.7 WARRANTY

A. Component Warranties: Provide coincidental product warranties, where available, for major components of elevator work.

PART 2 - PRODUCTS

2.1 SYSTEMS MANUFACTURERS

A. ThyssenKrupp Elevators.

B. Otis Elevator Co., United Technologies.

C. Schindler Elevator Corp.

D. Substitutions: Refer to Section 01 25 00.

2.2 MATERIALS

A. System Description: Provide holeless type hydraulic elevator system including guide rails, brackets, cylinder, plunger, hydraulic fluid reservoir, pit buffers, hardware, and accessories.

1. Provide motors, pumps, piping, controls and wiring to main switch.
2. Provide hoistway doors, frames, and sills.
3. Provide passenger cars and car doors.

B. Regulatory Requirements, General: Comply with applicable codes and regulations for elevator work and including to ANSI A17.1 Safety Code for Elevators, Dumbwaiters and Escalators, and Moving Walks.

1. Fire Emergency Service: Comply with requirements of applicable codes; provide required control circuits to meet code requirements.

a. Comply with requirements of California Code of Regulations, Title 24.
a. Three position "on-off-bypass" key switch at ground floor.
b. Instructions for operation in ground floor cabinet.
c. Connect elevators to smoke detectors in lobbies.

2. Medical Emergency Operation: Comply with California Building Code for providing medical emergency operation.

3. Emergency Power Operation: Provide automatic switch to building emergency power system in case of standard power failure; type easily reset by building maintenance.

4. Emergency Battery Power Operation: Provide as required by California Building Standards Code.

C. Regulatory Requirements, Accessibility: Provide for assuring access for persons with disabilities in accordance with state and federal regulations.

1. California Regulations: Comply with California Building Standards Code.

2. Federal Regulations: Comply with Americans with Disabilities Act (ADA) Standards.

D. Design Criteria:

1. Elevator Characteristics:

a. Net Capacity: 3500 lbs.
b. Speed: 125 fpm.
c. Stops: Openings in line
d. Entrance Opening Size: 3'-6" wide by 7’-0” high.
e. Door Operation: Single speed side opening.

2. Operation: Selective collective operation.

a. Home Landing: Ground floor.
b. Sound Isolation: For equipment as applicable.
c. Door Operation: High-speed direct current master operators.

3. Signal Equipment:

a. Car control station and in-car position indicator.
b. Hall push-button stations.
c. Lanterns and gongs.
d. Hall position indicators.

4. Special Features:

a. Access for persons with disabilities.
b. Fire emergency service.
c. Medical emergency service.
d. Earthquake requirements.
e. Emergency exit service.
b. Battery type emergency power service for egress standby power.
c. Elevator keyed security operation.
d. Swing service.

B. Rolled Steel Sections, Shapes, and Rods: ANSI A17.1; ASTM A924 and A653 G90 galvanized coating.

C. Sheet Steel: ASTM A653, G90 coating designation, stretcher leveled, commercial grade.

D. Stainless Steel: ASTM A666, Type 304.

E. Aluminum: ASTM B221; enameling or anodizing quality as applicable.

F. Plywood: PS 1, fire retardant treated.

G. Sills: Extruded aluminum.

H. Plastic Laminate: NEMA LD3.1, General Purpose type; color, texture, and pattern conforming to approved samples.

1. Colors: Where color is not indicated on Drawings or Finish Schedule, provide custom color as directed by Architect.

2.2 FABRICATION

A. Machine: A.C. type specifically designed for hydraulic elevator service, having motor, pump, tank valves and muffler mounted and aligned on steel bedplate.

1. Provide solid state motor starter for car.

B. Viscosity Control: Provide complete hydraulic electronic control maintaining hydraulic fluid in reservoir, pump, and control valve at minimum 100 degrees F (plus or minus 5 degrees).

C. Cylinder/Plunger: Machine polished steel tube welded stop on bottom, sliding in high strength steel pipe cylinder having closed bottom and stuffing box with packing gland at top and necessary piping connections.

1. Provide internal couplings where jointed.

D. Elevator Car: Sheet steel enclosure with structural steel frame and bracing; 3/4" fire retardant treated plywood floor and wall cladding fastened with hidden mechanical fasteners.

1. Provide cars with 10'-0" high cab with ceiling removed.

E. Doors: Power operated hollow metal doors with track, rollers and frame; two-point suspension, nonmetallic sheaves; minimum 3" diameter for car doors, 2-1/2" diameter for hoistway doors.

1. Finish: Stainless steel.

2. Finish:

a. Car Doors: Stainless steel.
b. Hoistway Doors: Stainless steel.
c. Garage Level Hoistway Doors: Baked enamel on steel.

F. Hoistway Entrances: Provide formed metal entrances with struts, hanger headers, fascia plates, toe guards, and Underwriters' Laboratory labels.

1. Finish: Match doors.

2. Floor Graphics: Provide minimum 2" high embossed Arabic numerals, with Braille immediately left of numeral, on each side of each door frame; center at 60" above floor.

a. Provide medical emergency symbol at medical emergency elevator.
b. Provide star symbol at grade level in accordance with applicable codes.

c. Star symbol shall be raised, 2” diameter with points equal length.

3. Entrance Protection: Provide infrared door detectors complying with applicable codes and regulations, including requirements for access for persons with disabilities.

G. Car Finishes: Finishes as indicated.

1. Front Wall Panels: Stainless steel with inset buttons, swing return panels.

2. Side and Back Wall Panels: Removable plastic laminate panels with stainless steel trim, base, and reveals.

a. Colors: Where color is not indicated on Drawings or Finish Schedule, provide custom color as directed by Architect.

3. Flooring: Tile provided under Section 09 30 00 – Tiling.

4. Flooring: Carpet provided under Section 09 68 00 - Carpeting.

5. Ceiling: Removable stainless-steel LED downlight type.

6. Ceiling: Manufacturer’s standard LED luminous ceiling.

7. Railings: Stainless steel tubular rail, both sides and back.

8. Pads: Provide wall attachment buttons and protective pads.

H. Operating Fixtures and Signals: Comply with requirements for providing access for persons with disabilities; comply with applicable codes and regulations; stainless steel face panels unless otherwise indicated.

1. Car Control Station: Provide one car station with illuminated mechanical buttons, with hands free emergency communication not requiring voice communication, and service cabinet.

a. Provide door hold open button.

2. Hall Call Station: Provide one hall station risers with illuminated mechanical hall buttons.

3. In-Car Position Indicator: Provide car position indicator; provide indicator above elevator hoistway entrance or above control panel, as approved by Architect.

4. Lobby Car Position Indicator: Provide car position indicator above elevator hoistway entrance at Main Floor lobby, as approved by Architect.

5. Hall Lanterns: Provide wall-mounted lanterns with audible signal, one for up travel, two for down travel, above each hoistway entrance.

6. Jamb Lanterns: Provide jamb-mounted lanterns with audible signal, one for up travel, two for down travel.

7. Signs in Lobbies: 1/2" letters to read "IN CASE OF FIRE USE STAIRWAY FOR EXIT - DO NOT USE ELEVATOR"; sign to be approved by Architect and applicable authorities; stainless steel.

    a. Provide elevator lobby graphics conforming to applicable code requirements.

I. Miscellaneous Items: Provide as required by applicable codes and as follows.

1. Provide battery operated emergency lighting in each car.
2. Provide two-speed fan in each car.

J. Special Features:

1. Elevator Lobby Keyed Security Operation: Provide keyed buttons at hall call stations to prevent unauthorized use of elevators. Coordinate keying with Owner’s security system.

2. Elevator Control Stations Keyed Security Operation: Provide keyed buttons in car control stations allowing each floor to be individually locked out to prevent passenger from access to floor. Coordinate keying with Owner’s security system.

3. Independent Service Operation: Provide independent operation with key lock in elevator car cabinet or at car control panel to remove car from normal hall button service.

4. Swing Service Operation: Provide special call buttons in jamb for swing service operation, when key at first floor is turned "ON" elevator to be independent from standard hall call signals.

    a. Where not indicated on Drawings, confer with Architect regarding which elevator will provide swing service operation.

5. Battery Type Emergency Power Operation: Provide battery type emergency power system in case of standard power failure; type easily reset by building maintenance.

2.3 FINISHES

A. Nonexposed-to-View Surfaces:

1. Structural and Nonexposed Ferrous Metal Surfaces: Clean surfaces of rust, oil or grease and prime with structural steel primer.

2. Field Welds: Remove oxidation, flux or residue, wire brush clean and apply two coats of primer.

3. Wood: Provide one coat primer and two coats semi-gloss acrylic enamel.

B. Exposed-to-View Surfaces in Car, Machine Room and Hoistway Entrances:

1. Stainless Steel: Number 4 finish (satin directional polish).

2. Baked Enamel: Clean, degrease zinc-coated metal surface; one coat zinc oxide primer sprayed and baked; two coats semi-gloss enamel sprayed and baked; color as approved.

PART 3 - EXECUTION

3.1 PREPARATION

A. Examine work of other trades on which elevator work depends. Report defects to Architect in writing which may affect elevator work or equipment operation.

B. Ensure shafts and openings for moving equipment are plumb, level and in line. Verify pits are to proper depth, waterproofed and drained, with necessary access doors, ladder and guards.

C. Ensure machine room is properly illuminated, heated and ventilated, complete with floor and access door, and with equipment foundations or supporting beams correctly located.

D. Before fabrication, take necessary job site measurements and verify where work is governed by other trades; check measurement of space for equipment and means of access for installation and operation.

1. Obtain dimensions from site for preparation of shop drawings.

E. Ensure preparatory work has been properly completed to receive elevator work, including such work as:

1. Electrical feeder wires are provided to fused disconnect switches.

2. Provisions of hoistway outlets and power are provided for car light and for light in pit and outlets in machine room for light.

3. Furnishing of electric power is available for testing and adjusting equipment.

4. Provision of hoistway outlet is provided for telephone.

5. Machine room is enclosed and protected from moisture, with lockable door.

F. Supply in ample time for installation by other trades, inserts, anchors, bearing plates, brackets, supports and bracing, including setting templates and diagrams for placement.

3.2 INSTALLATION

A. Install in accordance with manufacturer's instructions, applicable codes, and standards to provide a quiet, smoothly operating installation, free from sidesway, oscillation or vibration.

1. Work shall be by mechanics skilled in this work and under direct control and supervision of elevator manufacturer's experienced supervisor.

B. Set hoistway entrances in alignment with car openings and true with plumb sill lines.

C. Mount machine in accordance with approved shop drawings; isolate and dampen machine vibration with properly sized sound-reducing anti-vibration pads.

D. Excavate for plunger and cylinder, set in place plumb and accurate, and enclose with 3000 psi concrete.

E. Erect hoistway sills, headers and frames prior to erection of rough walls and doors; erect fascias and toe guards after rough walls are finished.

F. Grout sills and hoistway entrance frames.

G. Make necessary adjustments of equipment to ensure elevator operates smoothly and accurately.

H. Locate and protect or lock movable equipment and controls in such a way that they can be operated only by authorized persons.

3.3 FIELD QUALITY CONTROL

A. Inspections and Permits: Obtain and pay for inspections and permits and make such tests as are required by regulations and authorities.

1. Final inspection shall be after elevator installation, hoisting enclosure and machine room are complete.

2. Inspect installation in accordance with ANSI A17.2.

3. Deliver test certificates and permits to Architect.

3.4 MAINTENANCE

A. Elevator Maintenance Period: Maintain entire elevator installation 12 months after date of Substantial Completion of Work.

1. Include systematic examination, adjustment and lubrication of elevator equipment.

a. Repair or replace worn electrical and mechanical parts of elevator equipment, using parts produced by manufacturer of equipment.

2. Perform work without removing cars during peak traffic periods.

3. Provide 24-hour emergency call-back service during maintenance period.

4. Ensure competent personnel handle maintenance service; maintain locally an adequate stock of parts for replacement or emergency purposes.

    a. Have qualified personnel available at such places to ensure fulfillment of this service without unreasonable loss of time.

B. Extended Maintenance Proposal: Submit proposal for maintenance of installed elevator work for a period of three years after termination of regular maintenance required at end of this section.

1. Proposal shall include stipulated sum for time period stated, with premiums due annually.

2. Extended maintenance proposal shall include requirements specified at end of section for first year maintenance agreement.

END OF SECTION

SECTION 22 05 13

COMMON MOTOR REQUIREMENTS FOR PLUMBING EQUIPMENT

PART 1 - GENERAL

1.1 SUMMARY

A. Section includes single- and three-phase motors for application on equipment provided under other sections and for motors furnished loose to Project.

B. Related Sections:

1. Section 26 05 26 - Grounding and Bonding for Electrical Systems.
2. Section 26 05 53 - Identification for Electrical Systems.

1.2 REFERENCES

A. American Bearing Manufacturers Association:

1. ABMA 9 - Load Ratings and Fatigue Life for Ball Bearings.

B. National Electrical Manufacturers Association:

1. NEMA MG 1 - Motors and Generators.

C. International Electrical Testing Association:

1. NETA ATS - Acceptance Testing Specifications for Electrical Power Distribution Equipment and Systems.

1.3 SUBMITTALS

A. Section 01 33 00 - Submittal Procedures: Submittal procedures.

B. Product Data: Submit catalog data for each motor furnished loose. Indicate nameplate data, standard compliance, electrical ratings and characteristics, and physical dimensions, weights, mechanical performance data, and support points.

C. Test Reports: Indicate procedures and results for specified factory and field testing and inspection.

1.4 QUALIFICATIONS

A. Manufacturer: Company specializing in manufacturing products specified in this section with minimum three years experience.

B. Testing Agency: Company member of International Electrical Testing Association and specializing in testing products specified in this section with minimum three years experience.

1.5 DELIVERY, STORAGE, AND HANDLING

A. Section 01 60 00 - Product Requirements: Product storage and handling requirements.

B. Lift only with lugs provided. Handle carefully to avoid damage to components, enclosure, and finish.

C. Protect products from weather and moisture by covering with plastic or canvas and by maintaining heating within enclosure.

D. For extended outdoor storage, remove motors from equipment and store separately.

PART 2 - PRODUCTS

2.1 PRODUCT REQUIREMENTS FOR MOTORS FURNISHED WITH EQUIPMENT

A. Motors 3/4 hp and Larger: Three-phase motor as specified below.

B. Motors Smaller Than 3/4 hp: Single-phase motor as specified below, except motors less than 250 watts or 1/4 hp may be equipment manufacturer's standard.

C. Three-Phase Motors: NEMA MG 1, Design B, energy-efficient squirrel-cage induction motor, with windings to accomplish starting methods and number of speeds as indicated on Drawings.

1. Voltage: As indicated on Drawings.
2. Service Factor: 1.15.
3. Enclosure: Meet conditions of installation unless specific enclosure is indicated on Drawings.
4. Design for continuous operation in 40 degrees C environment, with temperature rise in accordance with NEMA MG 1 limits for insulation class, service factor, and motor enclosure type.
5. Insulation System: NEMA Class H.
6. Motor Frames: NEMA Standard T-Frames of steel, aluminum, or cast iron with end brackets of cast iron or aluminum with steel inserts.
7. Thermistor System (Motor Frame Sizes 254T and Larger): Three PTC thermistors embedded in motor windings and epoxy encapsulated solid state control relay with wiring to terminal box.
8. Bearings: Grease lubricated anti-friction ball bearings with housings equipped with plugged provision for relubrication, rated for minimum ABMA 9, L-10 life of 200,000 hours. Calculate bearing load with NEMA minimum V-belt pulley with belt center line at end of NEMA standard shaft extension. Stamp bearing sizes on nameplate.
9. Sound Power Levels: Conform to NEMA MG 1.

D. Single Phase Motors:

1. Permanent split-capacitor type where available, otherwise use split-phase start/capacitor run or capacitor start/capacitor run motor.
2. Voltage: 115/230 volts, single phase, 60 Hz.

E. Wiring Terminations: Furnish terminal lugs to match branch circuit conductor quantities, sizes, and materials indicated.

2.2 THREE-PHASE MOTORS FURNISHED LOOSE

A. Manufacturers:

1. GE Industrial Motors; Wolong Electric Group Co., Ltd.
2. Marathon Electric Motors.
3. Siemens Industry, Inc., Energy Management Division.
4. WEG.
5. Substitutions: Section 01 60 00 - Product Requirements.

B. Product Description: NEMA MG 1, Design B, energy-efficient squirrel-cage induction motor, with windings to accomplish starting methods and number of speeds indicated.

C. Voltage: As indicated on drawings.

D. Service Factor: 1.15 or as indicated on Drawings.

E. Enclosure: Meet conditions of installation unless specific enclosure is specified or indicated.

F. Design for continuous operation in 40 degrees C environment, with temperature rise in accordance with NEMA MG 1 limits for insulation class, service factor, and motor enclosure type.

G. Insulation System: NEMA Class H.

H. Motor Frames: NEMA Standard T-Frames of steel, aluminum, or cast iron with end brackets of cast iron or aluminum with steel inserts.

I. Thermistor System (Motor Frame Sizes 254T and Larger): Three PTC thermistors embedded in motor windings and epoxy encapsulated solid state control relay with wiring to terminal box.

J. Bearings: Grease lubricated anti-friction ball bearings with housings equipped with plugged provision for relubrication, rated for minimum ABMA 9, L-10 life of 200,000 hours. Calculate bearing load with NEMA minimum V-belt pulley with belt center line at end of NEMA standard shaft extension. Stamp bearing sizes on nameplate.

K. Sound Power Levels: Conform to NEMA MG 1.

L. Wiring Terminations: Furnish terminal lugs to match branch circuit conductor quantities, sizes, and materials indicated.

2.3 SOURCE QUALITY CONTROL

A. Test motors in accordance with NEMA MG 1, including winding resistance, no-load speed and current, locked rotor current, insulation high-potential test, and mechanical alignment tests.

PART 3 - EXECUTION

3.1 EXISTING WORK

A. Disconnect and remove abandoned motors

B. Maintain access to existing motors and other installations remaining active and requiring access. Modify installation or provide access panel.

C. Clean and repair existing motors to remain or are to be reinstalled.

3.2 INSTALLATION

A. Install securely on firm foundation. Mount ball bearing motors with shaft in any position.

B. Install engraved plastic nameplates in accordance with Section 26 05 53.

C. Ground and bond motors in accordance with Section 26 05 26.

3.3 FIELD QUALITY CONTROL

A. Section 01 40 00 - Quality Requirements, 017000 - Execution and Closeout Requirements: Field inspecting, testing, adjusting, and balancing.

B. Inspect and test in accordance with NETA ATS, except Section 4.

C. Perform inspections and tests listed in NETA ATS, Section 7.15.

END OF SECTION

SECTION 22 05 16

EXPANSION FITTINGS AND LOOPS FOR PLUMBING PIPING

PART 1 - GENERAL

1.1 SUMMARY

A. Section Includes:

1. Flexible pipe connectors.
2. Expansion joints.
3. Expansion compensators.
4. Pipe alignment guides.
5. Swivel joints.
6. Pipe anchors.

B. Related Sections:

1. Section 22 05 29 - Hangers and Supports for Plumbing Piping and Equipment: Product and installation requirements for piping hangers and supports.
2. Section 22 05 48 - Vibration and Seismic Controls for Plumbing Piping and Equipment: Product and installation requirements for vibration isolators used in piping systems.
3. Section 22 11 00 - Facility Water Distribution: Product and installation requirements for piping used in domestic water systems.

1.2 REFERENCES

A. American Society of Mechanical Engineers:

1. ASME B31.9 - Building Services Piping.
2. ASME Section IX - Boiler and Pressure Vessel Code - Welding and Brazing Qualifications.

B. American Welding Society:

1. AWS D1.1 - Structural Welding Code - Steel.

1.3 DESIGN REQUIREMENTS

A. Provide structural work and equipment required for expansion and contraction of piping. Verify anchors, guides, and expansion joints provide and adequately protect system.

B. Expansion Compensation Design Criteria:

1. Installation Temperature: 50 degrees F.
2. Domestic Hot Water: 140 degrees F.
3. Safety Factor: 30 percent.

1.4 SUBMITTALS

A. Section 01 33 00 - Submittal Procedures: Requirements for submittals.

B. Shop Drawings: Indicate layout of piping systems, including flexible connectors, expansion joints, expansion compensators, loops, offsets and swing joints.

C. Product Data:

1. Flexible Pipe Connectors: Indicate maximum temperature and pressure rating, face-to-face length, live length, hose wall thickness, hose convolutions per foot and per assembly, fundamental frequency of assembly, braid structure, and total number of wires in braid.
2. Expansion Joints: Indicate maximum temperature and pressure rating, and maximum expansion compensation.

D. Design Data: Indicate criteria and show calculations.

E. Manufacturer's Installation Instructions: Submit special procedures.

F. Manufacturer's Certificate: Certify products meet or exceed specified requirements.

G. Welders' Certificate: Include welders' certification of compliance with ASME Section IX.

H. Manufacturer's Field Reports: Indicate results of inspection by manufacturer's representative.

1.5 CLOSEOUT SUBMITTALS

A. Section 01 70 00 - Execution and Closeout Requirements: Closeout procedures.

B. Project Record Documents: Record actual locations of flexible pipe connectors, expansion joints, anchors, and guides.

C. Operation and Maintenance Data: Submit adjustment instructions.

1.6 QUALITY ASSURANCE

A. Perform Work in accordance with ASME B31.9 code for installation of piping systems and ASME Section IX for welding materials and procedures.

B. Perform Work in accordance with State of California standard.

C. Maintain one copy of each document on site.

1.7 QUALIFICATIONS

A. Manufacturer: Company specializing in manufacturing products specified in this section with minimum three years experience.

B. Installer: Company specializing in performing Work of this section with minimum three years experience.

C. Design expansion compensating system under direct supervision of Professional Engineer experienced in design of this Work and licensed at Project location.

1.8 PRE-INSTALLATION MEETINGS

A. Section 01 30 00 - Administrative Requirements: Pre-installation meeting.

B. Convene minimum one week prior to commencing work of this section.

1.9 DELIVERY, STORAGE, AND HANDLING

A. Section 01 60 00 - Product Requirements: Product storage and handling requirements.

B. Accept expansion joints on site in factory packing with shipping bars and positioning devices intact. Inspect for damage.

C. Protect equipment from exposure by leaving factory coverings, pipe end protection, and packaging in place until installation.

1.10 WARRANTY

A. Section 01 70 00 - Execution and Closeout Requirements: Product warranties and product bonds.

B. Furnish five year manufacturer warranty for leak free performance of packed expansion joints.

1.11 EXTRA MATERIALS

A. Section 01 70 00 - Execution and Closeout Requirements: Spare parts and maintenance products.

B. Supply two 12 ounce containers of packing lubricant and cartridge style grease gun.

PART 2 - PRODUCTS

2.1 FLEXIBLE PIPE CONNECTORS

A. Manufacturers:

1. Flexicraft Industries.
2. Metraflex Company (The).
3. NIBCO INC.
4. Tyco Fire Products; brand of Johnson Controls International plc, Building Solutions North America.
5. Victaulic Company.
6. Substitutions: Section 01 60 00 - Product Requirements.

B. Furnish materials in accordance with State of California standards.

C. Steel Piping:

1. Inner Hose: Carbon Steel.
2. Exterior Sleeve: Single braided.
3. Pressure Rating: 125 psig WSP and 450 degrees F.
4. Joint: As specified in Section 23 21 13.
5. Size: Use pipe-sized units.
6. Maximum offset: 3/4 inch on each side of installed center line.

D. Copper Piping:

1. Inner Hose: Bronze.
2. Exterior Sleeve: Braided bronze.
3. Pressure Rating: 125 psig WSP and 450 degrees F.
4. Joint: As specified in Section 23 21 13.
5. Size: Use pipe sized units.
6. Maximum offset: 3/4 inch on each side of installed center line.

2.2 EXPANSION JOINTS

A. Manufacturers:

1. Flexicraft Industries.
2. Flex-Weld, Inc.
3. Hyspan Precision Products, Inc.
4. Mason Industries, Inc.
5. Metraflex Company (The).
6. Tyco Fire Products; brand of Johnson Controls International plc, Building Solutions North America.
7. U.S. Bellows, Inc.
8. Victaulic Company.
9. Substitutions: Section 01 60 00 - Product Requirements.

B. Stainless Steel Bellows Type:

1. Pressure Rating: 125 psig WSP and 400 degrees F.
2. Maximum Compression: 1-3/4 inch.
3. Maximum Extension: 1/4 inch.
4. Joint: As specified in Section 23 21 13.
5. Size: Use pipe sized units.
6. Application: Steel piping 3 inch and smaller.

C. External Ring Controlled Stainless Steel Bellows Type:

1. Pressure Rating: 125 psig WSP and 400 degrees F.
2. Maximum Compression: 15/16 inch.
3. Maximum Extension: 5/16 inch.
4. Maximum Offset: 1/8 inch.
5. Joint: Flanged.

6. Size: Use pipe sized units.
7. Accessories: Internal flow liner.
8. Application: Steel piping 3 inch and larger.

D. Single Sphere, Elbow Compensators:

1. Body: Teflon.
2. Working Pressure: 125 psi.
3. Maximum Temperature: 400 degrees F.
4. Maximum Compression: 1/2 inch.
5. Maximum Elongation: 3/8 inch.
6. Maximum Offset: 3/8 inch.
7. Maximum Angular Movement: 15 degrees.
8. Joint: Tapped steel flanges.
9. Size: Use pipe sized units.
10. Accessories: Control rods.
11. Application: Steel piping 2 inch and larger.

E. Two-ply Bronze Bellows Type:

1. Construction: Bronze with anti-torque device, limit stops, internal guides.
2. Pressure Rating: 125 psig WSP and 400 degrees F.
3. Maximum Compression: 1-3/4 inch.
4. Maximum Extension: 1/4 inch.
5. Joint: As specified in Section 23 21 13.
6. Size: Use pipe sized units.
7. Application: Copper piping.

F. Low Pressure Compensators with two-ply Bronze Bellows:

1. Working Pressure: 75 psig.
2. Maximum Temperatures: 250 degrees F.
3. Maximum Compression: 1/2 inch.
4. Maximum Extension: 5/32 inch.
5. Joint: Soldered.
6. Size: Use pipe sized units.
7. Application: Copper or steel piping 2 inch and smaller.

G. Copper with Packed Sliding Sleeve:

1. Maximum Temperature: 250 degrees F.
2. Joint: As specified in Section 23 21 13.
3. Size: Use pipe sized units.
4. Copper or steel piping 2 inches and larger.
5. Application: Copper or steel piping 2 inch and larger.

2.3 ACCESSORIES

A. Manufacturers:

1. Aeroquip Performance Products; Eaton, Hydraulics Sector.

2. Anvil International/Smith-Cooper International; Tailwind Capital, LLC.
3. Flex-Weld, Inc.
4. Hyspan Precision Products, Inc.
5. Metraflex Company (The).
6. NIBCO INC.
7. Tyco Fire Products; brand of Johnson Controls International plc, Building Solutions North America.
8. Substitutions: Section 01 60 00 - Product Requirements.

B. Pipe Alignment Guides: Two piece welded steel with enamel paint, bolted, with spider to fit standard pipe, frame with four mounting holes, clearance for minimum 1 inch thick insulation, minimum 3 inch travel.

C. Swivel Joints: Fabricated steel body, double ball bearing race, field lubricated, with rubber (Buna-N) o-ring seals.

PART 3 - EXECUTION

3.1 INSTALLATION

A. Install Work in accordance with ASME B31.9.

B. Install flexible pipe connectors on pipes connected to equipment supported by vibration isolation. Refer to Section 22 05 48. Provide line size flexible connectors.

C. Install flexible connectors at right angles to displacement. Install one end immediately adjacent to isolated equipment and anchor other end. Install in horizontal plane unless indicated otherwise.

D. Rigidly anchor pipe to building structure. Provide pipe guides to direct movement only along axis of pipe. Erect piping so strain and weight is not on cast connections or apparatus.

E. Provide support and anchors for controlling expansion and contraction of piping. Provide loops, pipe offsets, and swing joints, or expansion joints as indicated on Drawings. Refer to Section 22 05 29 for pipe hanger installation requirements.

F. Provide grooved piping systems with minimum one joint per inch pipe diameter instead of flexible connector supported by vibration isolation. Grooved piping systems need not be anchored.

G. Provide expansion loops as indicated on Drawings.

3.2 MANUFACTURER'S FIELD SERVICES

A. Section 01 40 00 - Quality Requirements: Manufacturers' field services.

B. Furnish inspection services by flexible pipe manufacturer's representative for final installation and certify installation is in accordance with manufacturer's recommendations and connectors are performing satisfactorily.

END OF SECTION

SECTION 22 05 29

HANGERS AND SUPPORTS FOR PLUMBING PIPING AND EQUIPMENT

PART 1 - GENERAL

1.1 SUMMARY

A. Section Includes:

1. Pipe hangers and supports.
2. Hanger rods.
3. Inserts.
4. Flashing.
5. Sleeves.
6. Mechanical sleeve seals.
7. Formed steel channel.
8. Firestopping relating to plumbing work.
9. Firestopping accessories.
10. Equipment bases and supports.

B. Related Sections:

1. Section 03 10 00 - Concrete Forming and Accessories: Execution requirements for placement of inserts or sleeves in concrete forms specified by this section.
2. Section 03 30 00 - Cast-In-Place Concrete: Execution requirements for placement of concrete housekeeping pads specified by this section.
3. Section 07 84 00 - Firestopping: Product requirements for firestopping for placement by this section.
4. Section 09 90 00 - Painting and Coating: Product and execution requirements for painting specified by this section.
5. Section 22 05 48 - Vibration and Seismic Controls for Plumbing Piping and Equipment: Product and execution requirements for vibration isolators.
6. Section 22 11 00 - Facility Water Distribution: Execution requirements for placement of hangers and supports specified by this section.
7. Section 22 13 00 - Facility Sanitary Sewerage: Execution requirements for placement of hangers and supports specified by this section.
8. Section 22 14 00 - Facility Storm Drainage: Execution requirements for placement of hangers and supports specified by this section.
9. Section 22 16 00 – Facility Natural Gas Piping: Execution requirements for placement of hangers and supports specified by this section.

1.2 REFERENCES

A. American Society of Mechanical Engineers:

1. ASME B31.1 - Power Piping.
2. ASME B31.5 - Refrigeration Piping.
3. ASME B31.9 - Building Services Piping.

B. ASTM International:

1. ASTM E84 - Standard Test Method for Surface Burning Characteristics of Building Materials.
2. ASTM E119 - Standard Test Methods for Fire Tests of Building Construction and Materials.
3. ASTM E814 - Standard Test Method for Fire Tests of Through Penetration Fire Stops.
4. ASTM F708 - Standard Practice for Design and Installation of Rigid Pipe Hangers.
5. ASTM E1966 - Standard Test Method for Fire-Resistive Joint Systems.

C. American Welding Society:

1. AWS D1.1 - Structural Welding Code - Steel.

D. FM Global:

1. FM - Approval Guide, A Guide to Equipment, Materials & Services Approved By Factory Mutual Research For Property Conservation.

E. Manufacturers Standardization Society of the Valve and Fittings Industry:

1. MSS SP 58 - Pipe Hangers and Supports - Materials, Design and Manufacturer.
2. MSS SP 69 - Pipe Hangers and Supports - Selection and Application.
3. MSS SP 89 - Pipe Hangers and Supports - Fabrication and Installation Practices.

F. Underwriters Laboratories Inc.:
1. UL 1479 - Fire Tests of Through-Penetration Firestops.
2. UL 2079 - Tests for Fire Resistance of Building Joint Systems.
3. UL - Fire Resistance Directory.

1.3 DEFINITIONS

A. Firestopping (Through-Penetration Protection System): Sealing or stuffing material or assembly placed in spaces between and penetrations through building materials to arrest movement of fire, smoke, heat, and hot gases through fire rated construction.

1.4 SYSTEM DESCRIPTION

A. Firestopping Materials: UL 1479 to achieve fire ratings as noted on Drawings for adjacent construction, but not less than 1 hour fire rating.

B. Firestop interruptions to fire rated assemblies, materials, and components.

1.5 PERFORMANCE REQUIREMENTS

A. Firestopping: Conform to UL for fire resistance ratings and surface burning characteristics.

B. Firestopping: Provide certificate of compliance from authority having jurisdiction indicating approval of materials used.

1.6 SUBMITTALS

A. Section 01 33 00 - Submittal Procedures: Submittal procedures.

B. Shop Drawings: Indicate system layout with location including critical dimensions, sizes, and pipe hanger and support locations and detail of trapeze hangers.

C. Product Data:

1. Hangers and Supports: Submit manufacturers catalog data including load capacity.
2. Firestopping: Submit data on product characteristics, performance and limitation criteria.

D. Firestopping Schedule: Submit schedule of opening locations and sizes, penetrating items, and required listed design numbers to seal openings to maintain fire resistance rating of adjacent assembly.

E. Design Data: Indicate load carrying capacity of trapeze, multiple pipe, and riser support hangers. Indicate calculations used to determine load carrying capacity of trapeze, multiple pipe, and riser support hangers.

F. Manufacturer's Installation Instructions:

1. Hangers and Supports: Submit special procedures and assembly of components.
2. Firestopping: Submit preparation and installation instructions.

G. Manufacturer's Certificate: Certify products meet or exceed specified requirements.

H. Firestopping Engineering Judgments: For conditions not covered by UL or WH listed designs, submit judgments by licensed professional engineer suitable for presentation to authority having jurisdiction for acceptance as meeting code fire protection requirements.

1.7 QUALITY ASSURANCE

A. Through Penetration Firestopping of Fire Rated Assemblies: UL 1479 with 0.10 inch water gage minimum positive pressure differential to achieve fire F-Ratings and temperature T-Ratings as indicated on Drawings, but not less than 1-hour.

1. Wall Penetrations: Fire F-Ratings as indicated on Drawings, but not less than 1-hour.
2. Floor and Roof Penetrations: Fire F-Ratings and temperature T-Ratings as indicated on Drawings, but not less than 1-hour.

a. Floor Penetrations Within Wall Cavities: T-Rating is not required.

B. Through Penetration Firestopping of Non-Fire Rated Floor and Roof Assemblies: Materials to resist free passage of flame and products of combustion.

1. Noncombustible Penetrating Items: Noncombustible materials for penetrating items connecting maximum of three stories.

2. Penetrating Items: Materials approved by authorities having jurisdiction for penetrating items connecting maximum of two stories.

C. Fire Resistant Joints in Fire Rated Floor, Roof, and Wall Assemblies: ASTM E1966 or UL 2079 to achieve fire resistant rating as indicated on Drawings for assembly in which joint is installed.

D. Fire Resistant Joints Between Floor Slabs and Exterior Walls: ASTM E119 with 0.10 inch water gage minimum positive pressure differential to achieve fire resistant rating as indicated on Drawings for floor assembly.

E. Surface Burning Characteristics: Maximum 25/450 flame spread/smoke developed index when tested in accordance with ASTM E84.

F. Perform Work in accordance with AWS D1.1 for welding hanger and support attachments to building structure.

G. Perform Work in accordance with State of California standard.

H. Maintain one copy of each document on site.

1.8 QUALIFICATIONS

A. Manufacturer: Company specializing in manufacturing Products specified in this section with minimum three years experience.

B. Installer: Company specializing in performing Work of this section with minimum three years.

1.9 PRE-INSTALLATION MEETINGS

A. Section 01 30 00 - Administrative Requirements: Pre-installation meeting.

B. Convene minimum one week prior to commencing work of this section.

1.10 DELIVERY, STORAGE, AND HANDLING

A. Section 01 60 00 - Product Requirements: Requirements for transporting, handling, storing, and protecting products.

B. Accept materials on site in original factory packaging, labeled with manufacturer's identification.

C. Protect from weather and construction traffic, dirt, water, chemical, and damage, by storing in original packaging.

1.11 ENVIRONMENTAL REQUIREMENTS

A. Section 01 60 00 - Product Requirements: Environmental conditions affecting products on site.

B. Do not apply firestopping materials when temperature of substrate material and ambient air is below 60 degrees F.

C. Maintain this minimum temperature before, during, and for minimum 3 days after installation of firestopping materials.

D. Provide ventilation in areas to receive solvent cured materials.

1.12 FIELD MEASUREMENTS

A. Verify field measurements prior to fabrication.

1.13 WARRANTY

A. Section 01 70 00 - Execution and Closeout Requirements: Product warranties and product bonds.

B. Furnish five year manufacturer warranty for pipe hangers and supports.

PART 2 - PRODUCTS

2.1 PIPE HANGERS AND SUPPORTS

A. Manufacturers:

1. B-Line.
2. Tolco.
3. Anvil International.
4. Unistrut.
5. Superstrut.
6. Hilti, Inc.
7. NIBCO INC.
8. PHD Manufacturing, Inc.
9. Substitutions: Section 01 60 00 - Product Requirements.

B. Plumbing Piping - DWV:

1. Conform to ASME B31.9.
2. Hangers for Pipe Sizes 1/2 to 1-1/2 inch: Malleable iron, adjustable swivel, split ring.
3. Hangers for Pipe Sizes 2 inches and Larger: Carbon steel, adjustable, clevis.
4. Multiple or Trapeze Hangers: Steel channels with welded spacers and hanger rods.
5. Wall Support for Pipe Sizes 3 inches and Smaller: Cast iron hook.
6. Wall Support for Pipe Sizes 4 inches and Larger: Welded steel bracket and wrought steel clamp.
7. Vertical Support: Steel riser clamp.
8. Floor Support: Cast iron adjustable pipe saddle, lock nut, nipple, floor flange, and concrete pier or steel support.
9. Copper Pipe Support: Copper-plated, carbon-steel adjustable, ring.

C. Plumbing Piping - Water:

1. Conform to ASME B31.9.
2. Hangers for Pipe Sizes 1/2 to 1-1/2 inch: Malleable iron, adjustable swivel, split ring.
3. Hangers for Cold Pipe Sizes 2 inches and Larger: Carbon steel, adjustable, clevis.
4. Hangers for Hot Pipe Sizes 2 to 4 inches: Carbon steel, adjustable, clevis.
5. Hangers for Hot Pipe Sizes 6 inches and Larger: Adjustable steel yoke, cast iron roll, double hanger.
6. Multiple or Trapeze Hangers: Steel channels with welded spacers and hanger rods.
7. Multiple or Trapeze Hangers for Hot Pipe Sizes 6 inches and Larger: Steel channels with welded spacers and hanger rods, cast iron roll.
8. Wall Support for Pipe Sizes 3 inches and Smaller: Cast iron hook.
9. Wall Support for Pipe Sizes 4 inches and Larger: Welded steel bracket and wrought steel clamp.
10. Wall Support for Hot Pipe Sizes 6 inches and Larger: Welded steel bracket and wrought steel clamp with adjustable steel yoke and cast iron roll.
11. Vertical Support: Steel riser clamp.
12. Floor Support for Cold Pipe: Cast iron adjustable pipe saddle, lock nut, nipple, floor flange, and concrete pier or steel support.
13. Floor Support for Hot Pipe Sizes 4 inches and Smaller: Cast iron adjustable pipe saddle, lock nut, nipple, floor flange, and concrete pier or steel support.
14. Floor Support for Hot Pipe Sizes 6 inches and Larger: Adjustable cast iron roll and stand, steel screws, and concrete pier or steel support.
15. Copper Pipe Support: Copper-plated, Carbon-steel ring.

2.2 ACCESSORIES

A. Hanger Rods: Mild steel threaded both ends, threaded on one end, or continuous threaded.

2.3 INSERTS

A. Manufacturers:

1. B-Line.
2. Tolco.
3. Hilti.
4. Substitutions: Section 01 60 00 - Product Requirements.

B. Inserts: Malleable iron case of galvanized steel shell and expander plug for threaded connection with lateral adjustment, top slot for reinforcing rods, lugs for attaching to forms; size inserts to suit threaded hanger rods.

2.4 FLASHING

A. Metal Flashing: 26 gage thick galvanized steel.

B. Metal Counterflashing: 22 gage thick galvanized steel.

C. Lead Flashing:

1. Waterproofing: 5 lb./sq. ft sheet lead.
2. Soundproofing: 1 lb./sq. ft sheet lead.

D. Caps: Steel, 22 gage minimum; 16 gage at fire resistant elements.

2.5 SLEEVES

A. Sleeves for Pipes Through Non-fire Rated Floors: 18 gage thick galvanized steel.

B. Sleeves for Pipes Through Non-fire Rated Beams, Walls, Footings, and Potentially Wet Floors: Steel pipe or 18 gage thick galvanized steel.

C. Sealant: Acrylic.

2.6 MECHANICAL SLEEVE SEALS

A. Manufacturers:

1. Thunderline Link-Seal Inc.

2. NMP Corporation.
3. Substitutions: Section 01 60 00 - Product Requirements.

B. Product Description: Modular mechanical type, consisting of interlocking synthetic rubber links shaped to continuously fill annular space between object and sleeve, connected with bolts and pressure plates causing rubber sealing elements to expand when tightened, providing watertight seal and electrical insulation.

2.7 FORMED STEEL CHANNEL

A. Manufacturers:

1. B-line; Eaton, Electrical Sector.
2. Unistrut; Atkore International.
3. Substitutions: Section 01 60 00 - Product Requirements.

B. Product Description: Galvanized 12 gage thick steel. With holes 1-1/2 inches on center.

2.8 FIRESTOPPING

A. Manufacturers:

1. 3M Fire Protection Products.
2. Dow-Corning.
3. Hilti, Inc.
4. Substitutions: Section 01 60 00 - Product Requirements.

B. Product Description: Different types of products by multiple manufacturers are acceptable as required to meet specified system description and performance requirements; provide only one type for each similar application.

1. Silicone Firestopping Elastomeric Firestopping: Single component silicone elastomeric compound and compatible silicone sealant.
2. Foam Firestopping Compounds: Single component foam compound.
3. Formulated Firestopping Compound of Incombustible Fibers: Formulated compound mixed with incombustible non-asbestos fibers.
4. Fiber Stuffing and Sealant Firestopping: Composite of mineral fiber stuffing insulation with silicone elastomer for smoke stopping.
5. Mechanical Firestopping Device with Fillers: Mechanical device with incombustible fillers and silicone elastomer, covered with sheet stainless steel jacket, joined with collars, penetration sealed with flanged stops.
6. Intumescent Firestopping: Intumescent putty compound which expands on exposure to surface heat gain.
7. Firestop Pillows: Formed mineral fiber pillows.

2.9 FIRESTOPPING ACCESSORIES

A. Primer: Type recommended by firestopping manufacturer for specific substrate surfaces and suitable for required fire ratings.

B. Dam Material: Permanent:

1. Mineral fiberboard.
2. Mineral fiber matting.

C. Installation Accessories: Provide clips, collars, fasteners, temporary stops or dams, and other devices required to position and retain materials in place.

D. General:

1. Furnish UL listed products.
2. Select products with rating not less than rating of wall or floor being penetrated.

E. Non-Rated Surfaces:

1. Stamped steel, chrome plated, hinged, split ring escutcheons or floor plates or ceiling plates for covering openings in occupied areas where piping is exposed.
2. For exterior wall openings below grade, furnish mechanical sealing device to continuously fill annular space between piping and cored opening or water-stop type wall sleeve.

PART 3 - EXECUTION

3.1 EXAMINATION

A. Section 01 30 00 - Administrative Requirements: Verification of existing conditions before starting work.

B. Verify openings are ready to receive sleeves.

C. Verify openings are ready to receive firestopping.

3.2 PREPARATION

A. Clean substrate surfaces of dirt, dust, grease, oil, loose material, or other matter affecting bond of firestopping material.

B. Remove incompatible materials affecting bond.

C. Install damming materials to arrest liquid material leakage.

D. Obtain permission from Architect/Engineer before using powder-actuated anchors.

E. Do not drill or cut structural members.

F. Obtain permission from Architect/Engineer before drilling or cutting structural members.

3.3 INSTALLATION - INSERTS

A. Install inserts for placement in concrete forms.

B. Install inserts for suspending hangers from reinforced concrete slabs and sides of reinforced concrete beams.

C. Provide hooked rod to concrete reinforcement section for inserts carrying pipe 4 inches and larger.

D. Where concrete slabs form finished ceiling, locate inserts flush with slab surface.

E. Where inserts are omitted, drill through concrete slab from below and provide through-bolt with recessed square steel plate and nut above slab.

3.4 INSTALLATION - PIPE HANGERS AND SUPPORTS

A. Install in accordance with ASME B31.1.

B. Support horizontal piping as scheduled.

C. Install hangers with minimum 1/2 inch space between finished covering and adjacent work.

D. Place hangers within 12 inches of each horizontal elbow.

E. Use hangers with 1-1/2 inch minimum vertical adjustment.

F. Support horizontal cast iron pipe adjacent to each hub, with 5 feet maximum spacing between hangers.

G. Support vertical piping at every floor. Support vertical cast iron pipe at each floor at hub.

H. Where piping is installed in parallel and at same elevation, provide multiple pipe or trapeze hangers.

I. Support riser piping independently of connected horizontal piping.

J. Provide copper plated hangers and supports for copper piping.

K. Design hangers for pipe movement without disengagement of supported pipe.

L. Prime coat exposed steel hangers and supports. Hangers and supports located in crawl spaces, pipe shafts, and suspended ceiling spaces are not considered exposed.

M. Provide clearance in hangers and from structure and other equipment for installation of insulation. Refer to Section 22 07 00.

3.5 INSTALLATION - EQUIPMENT BASES AND SUPPORTS

A. Provide housekeeping pads of concrete, minimum 3-1/2 inches thick and extending 6 inches beyond supported equipment. Refer to Section 03 30 00.

B. Using templates furnished with equipment, install anchor bolts, and accessories for mounting and anchoring equipment.

C. Construct supports of formed steel channel or steel pipe and fittings. Brace and fasten with flanges bolted to structure.

D. Provide rigid anchors for pipes after vibration isolation components are installed. Refer to Section 21 05 48.

3.6 INSTALLATION - FLASHING

A. Provide flexible flashing and metal counterflashing where piping penetrates weather or waterproofed walls, floors, and roofs.

B. Flash vent and soil pipes projecting 3 inches minimum above finished roof surface with lead worked 1 inch minimum into hub, 8 inches minimum clear on sides with 24 x 24 inches sheet size. For pipes through outside walls, turn flanges back into wall and caulk, metal counter-flash, and seal.

C. Flash floor drains in floors with topping over finished areas with lead, 10 inches clear on sides with minimum 36 x 36 inch sheet size. Fasten flashing to drain clamp device.

D. Seal floor, shower, and mop sink drains watertight to adjacent materials.

E. Adjust storm collars tight to pipe with bolts; caulk around top edge. Use storm collars above roof jacks. Screw vertical flange section to face of curb.

3.7 INSTALLATION - SLEEVES

A. Exterior watertight entries: Seal with mechanical sleeve seals.

B. Set sleeves in position in forms. Provide reinforcing around sleeves.

C. Size sleeves large enough to allow for movement due to expansion and contraction. Provide for continuous insulation wrapping.

D. Extend sleeves through floors 1 inch above finished floor level. Caulk sleeves.

E. Where piping penetrates floor, ceiling, or wall, close off space between pipe and adjacent work with stuffing insulation and caulk airtight. Provide close fitting metal collar or escutcheon covers at both sides of penetration.

F. Install chrome plated steel escutcheons at finished surfaces.

3.8 INSTALLATION - FIRESTOPPING

A. Firestopping Materials: Comply with requirements of Section 07 84 00.

B. Install material at fire rated construction perimeters and openings containing penetrating sleeves, piping and other items, requiring firestopping.

C. Apply primer where recommended by manufacturer for type of firestopping material and substrate involved, and as required for compliance with required fire ratings.

D. Apply firestopping material in sufficient thickness to achieve required fire and smoke rating to uniform density and texture.

E. Compress fibered material to maximum 40 percent of its uncompressed size.

F. Place intumescent coating in sufficient coats to achieve rating required.

G. Fire Rated Surface:

1. Seal opening at floor, wall, partition, ceiling, and roof as follows:

a. Install sleeve through opening and extending beyond minimum of 1 inch on both sides of building element.
b. Size sleeve allowing minimum of 1 inch void between sleeve and building element.
c. Pack void with backing material.
d. Seal ends of sleeve with UL listed fire resistive silicone compound to meet fire rating of structure penetrated.

H. Non-Rated Surfaces:

1. Seal opening through non-fire rated wall, partition floor, ceiling, and roof opening as follows:

a. Install sleeve through opening and extending beyond minimum of 1 inch on both sides of building element.
b. Size sleeve allowing minimum of 1 inch void between sleeve and building element.
c. Install type of firestopping material recommended by manufacturer.

2. Install escutcheons where conduit, penetrates non-fire rated surfaces in occupied spaces. Occupied spaces include rooms with finished ceilings and where penetration occurs below finished ceiling.
3. Exterior wall openings below grade: Assemble rubber links of mechanical sealing device to size of piping and tighten in place, in accordance with manufacturer's instructions.
4. Interior partitions: Seal pipe penetrations. Apply sealant to both sides of penetration to completely fill annular space between sleeve and conduit.

3.9 FIELD QUALITY CONTROL

A. Section 01 40 00 - Quality Requirements: Requirements for inspecting, testing.

B. Section 01 70 00 - Execution and Closeout Requirements: Requirements for testing, adjusting, and balancing.

C. Inspect installed firestopping for compliance with specifications and submitted schedule.

3.10 CLEANING

A. Section 01 70 00 - Execution and Closeout Requirements: Requirements for cleaning.

B. Clean adjacent surfaces of firestopping materials.

3.11 PROTECTION OF FINISHED WORK

A. Section 01 70 00 - Execution and Closeout Requirements: Requirements for protecting finished Work.

B. Protect adjacent surfaces from damage by material installation.

3.12 SCHEDULES

A. Pipe Hanger Spacing:

1. Pipe Material: Cast iron.

a. Maximum Hanger Spacing: 5 feet.
b. Hanger Rod Diameter: 5/8 inch.

2. Pipe Material: Cast Iron, with 10-foot length of pipe.

a. Maximum Hanger Spacing: 10 feet.
b. Hanger Rod Diameter: 5/8 inch.

3. Pipe Material: Copper tube.

    a. Size: 1-1/4 inches and smaller.
    b. Maximum Hanger Spacing: 6 feet.
    c. Hanger Rod Diameter: 1/2 inch.

4. Pipe Material: Copper tube.

    a. Size: 1-1/2 inches and larger.
    b. Maximum Hanger Spacing: 10 feet.
    c. Hanger Rod Diameter: 1/2 inch.

5. Pipe Material: Steel.

    a. Size: 3 inches and smaller.
    b. Maximum Hanger Spacing: 12 feet.
    c. Hanger Rod Diameter: 1/2 inch.

6. Pipe Material: Steel.

    a. Size: 4 inches and larger.
    b. Maximum Hanger Spacing: 12 feet.
    c. Hanger Rod Diameter: 5/8 inch.

END OF SECTION

SECTION 22 05 48

VIBRATION AND SEISMIC CONTROLS FOR PLUMBING PIPING AND EQUIPMENT

PART 1 - GENERAL

1.1 SUMMARY

A. Section Includes:

1. Inertia bases.
2. Vibration isolators.

B. Related Sections:

1. Section 03 30 00 - Cast-In-Place Concrete: Execution requirements for placement of isolators in floating floor slabs specified by this section and product requirements for concrete for placement by this section.
2. Section 07 90 00 - Joint Protection: Product requirements for joint sealers specified for placement by this section.
3. Section 22 05 16 - Expansion Fittings and Loops for Plumbing Piping: Product requirements for anchors and piping expansion compensation.
4. Section 22 05 29 - Hangers and Supports for Plumbing Piping and Equipment: Product requirements for pipe hangers and supports.
5. Section 23 05 93 - Testing, Adjusting, and Balancing for HVAC: Requirements for sound and vibration measurements performed independent of this section.

1.2 REFERENCES

A. American National Standards Institute:

1. ANSI S1.4 - Sound Level Meters.
2. ANSI S1.8 - Reference Quantities for Acoustical Levels.
3. ANSI S12.36 - Survey Methods for the Determination of Sound Power Levels of Noise Sources.

B. Air-Conditioning and Refrigeration Institute:

1. ARI 575 - Method of Measuring Machinery Sound within Equipment Space.

C. American Society of Heating, Refrigerating and Air-Conditioning Engineers:

1. ASHRAE Handbook - HVAC Applications.

1.3 PERFORMANCE REQUIREMENTS

A. Provide vibration isolation on motor driven equipment over 0.5 hp, plus connected piping.

B. Provide minimum static deflection of isolators for equipment as follows:

1. Basement, Under 20 hp:

    a. Under 400 rpm: .
    b. 400 - 600 rpm: 1 inch.
    c. 600 - 800 rpm: 0.5 inch.
    d. 800 - 900 rpm: 0.2 inch.
    e. 1100 - 1500 rpm: 0.14 inch.
    f. Over 1500 rpm: 0.1 inch.

2. Basement, Over 20 hp.

    a. Under 400 rpm: .
    b. 400 - 600 rpm: 2 inch.
    c. 600 - 800 rpm: 1 inch.
    d. 800 - 900 rpm: 0.5 inch.
    e. 1100 - 1500 rpm: 0.2 inch.
    f. Over 1500 rpm: 0.15 inch.

3. Upper Floors, Normal:

    a. Under 400 rpm: .
    b. 400 - 600 rpm: 3.5 inch.
    c. 600 - 800 rpm: 2 inch.
    d. 800 - 900 rpm: 1 inch.
    e. 1100 - 1500 rpm: 0.5 inch.
    f. Over 1500 rpm: 0.2 inch.

4. Upper Floors, Critical:

    a. Under 400 rpm: .
    b. 400 - 600 rpm: .
    c. 600 - 800 rpm: 3.5 inch.
    d. 800 - 900 rpm: 2 inch.
    e. 1100 - 1500 rpm: 1 inch.
    f. Over 1500 rpm: 0.5 inch.

C. Consider upper floor locations critical unless otherwise indicated.

D. Use concrete inertia bases for motors in excess of 40 hp and on base mounted pumps over 10 hp.

E. Maintain sound level of spaces at levels not to exceed those listed below by utilizing acoustical devices.

F. Maintain rooms at following maximum sound levels, in Room Criteria (RC) as defined by ASHRAE Handbook, HVAC Applications

1. Offices:

    a. Executive: 25.
    b. Conference rooms: 25.

c. Private: 30.
d. Open-plan areas: 35.
e. Computer/business machine areas: 40.
f. Public circulation: 40.

1.4 SUBMITTALS

A. Section 01 33 00 - Submittal Procedures: Submittal procedures.

B. Product Data: Submit schedule of vibration isolator type with location and load on each. Submit catalog information indicating, materials and dimensional data.

C. Design Data: Submit calculations indicating maximum room sound levels are not exceeded.

D. Manufacturer's Installation Instructions: Submit special procedures and setting dimensions.

E. Manufacturer's Certificate: Certify isolators meet or exceed specified requirements.

F. Manufacturer's Field Reports: Indicate sound isolation installation is complete and in accordance with instructions.

1.5 CLOSEOUT SUBMITTALS

A. Section 01 70 00 - Execution and Closeout Requirements: Closeout procedures.

B. Project Record Documents: Record actual locations of hangers including attachment points.

1.6 QUALITY ASSURANCE

A. Perform Work in accordance with ARI 575.

B. Maintain one copy of each document on site.

1.7 QUALIFICATIONS

A. Manufacturer: Company specializing in manufacturing products specified in this section with minimum three years experience.

B. Installer: Company specializing in performing Work of this section with minimum three years experience.

C. Design application of under direct supervision of Professional Engineer experienced in design of this Work and licensed in State of California.

1.8 PRE-INSTALLATION MEETINGS

A. Section 01 30 00 - Administrative Requirements: Pre-installation meeting.

B. Convene minimum one week prior to commencing work of this section.

1.9 FIELD MEASUREMENTS

A. Verify field measurements prior to fabrication.

1.10 WARRANTY

A. Section 01 70 00 - Execution and Closeout Requirements: Product warranties and product bonds.

B. Furnish five year manufacturer warranty for inertia bases.

PART 2 - PRODUCTS

2.1 INERTIA BASES

A. Manufacturers:

1. Kinetics Noise Control, Inc.
2. Vibration Mountings & Controls, Inc.
3. Vibro-Acoustics.
4. Substitutions: Section 01 60 00 - Product Requirements.

B. Structural Bases:

1. Design: Sufficiently rigid to prevent misalignment or undue stress on machine, and to transmit design loads to isolators and snubbers.
2. Construction: Welded structural steel with gusset brackets, supporting equipment and motor with motor slide rails.

C. Concrete Inertia Bases:

1. Mass: Minimum of 1.5 times weight of isolated equipment.
2. Construction: Structured steel channel perimeter frame, with gusset brackets and anchor bolts, adequately reinforced, concrete filled.
3. Connecting Point: Reinforced to connect isolators and snubbers to base.
4. Concrete: Reinforced 3,000 psi concrete.

2.2 VIBRATION ISOLATORS

A. Manufacturers:

1. Ace Mountings Co., Inc.
2. Amber/Booth Company, Inc.; a VMC Group Company.
3. California Dynamics Corporation.
4. Isolation Technology, Inc.
5. Kinetics Noise Control, Inc.
6. Mason Industries, Inc.
7. Vibration Eliminator Co., Inc.
8. Vibration Isolation.
9. Vibration Mountings & Controls, Inc.
10. Substitutions: Section 01 60 00 - Product Requirements.

B. Open Spring Isolators:

1. Spring Isolators:

   a. For Exterior and Humid Areas: Furnish hot dipped galvanized housings and neoprene coated springs.
   b. Code: Color code springs for load carrying capacity.

2. Springs: Minimum horizontal stiffness equal to 75 percent vertical stiffness, with working deflection between 0.3 and 0.6 of maximum deflection.
3. Spring Mounts: Furnish with leveling devices, minimum 0.25 inch thick neoprene sound pads, and zinc chromate plated hardware.
4. Sound Pads: Size for minimum deflection of 0.05 inch; meet requirements for neoprene pad isolators.

C. Restrained Spring Isolators:

1. Spring Isolators:

   a. For Exterior and Humid Areas: Furnish hot dipped galvanized housings and neoprene coated springs.
   b. Code: Color code springs for load carrying capacity.

2. Springs: Minimum horizontal stiffness equal to 75 percent vertical stiffness, with working deflection between 0.3 and 0.6 of maximum deflection.
3. Spring Mounts: Furnish with leveling devices, minimum 0.25 inch thick neoprene sound pads, and zinc chromate plated hardware.
4. Sound Pads: Size for minimum deflection of 0.05 inch; meet requirements for neoprene pad isolators.
5. Restraint: Furnish mounting frame and limit stops.

D. Closed Spring Isolators:

1. Spring Isolators:

   a. For Exterior and Humid Areas: Furnish hot dipped galvanized housings and neoprene coated springs.
   b. Code: Color code springs for load carrying capacity.

2. Type: Closed spring mount with top and bottom housing separated with neoprene rubber stabilizers.
3. Springs: Minimum horizontal stiffness equal to 75 percent vertical stiffness, with working deflection between 0.3 and 0.6 of maximum deflection.
4. Housings: Incorporate neoprene isolation pad meeting requirements for neoprene pad isolators, and neoprene side stabilizers with minimum 0.25 inch clearance.

E. Restrained Closed Spring Isolators:

1. Spring Isolators:

a. For Exterior and Humid Areas: Furnish hot dipped galvanized housings and neoprene coated springs.
b. Code: Color code springs for load carrying capacity.

2. Type: Closed spring mount with top and bottom housing separated with neoprene rubber stabilizers.
3. Springs: Minimum horizontal stiffness equal to 75 percent vertical stiffness, with working deflection between 0.3 and 0.6 of maximum deflection.
4. Housings: Incorporate neoprene isolation pad meeting requirements for neoprene pad isolators, and neoprene side stabilizers with minimum 0.25 inch clearance and limit stops.

F. Spring Hanger:

1. Spring Isolators:

a. For Exterior and Humid Areas: Furnish hot dipped galvanized housings and neoprene coated springs.
b. Code: Color code springs for load carrying capacity.

2. Springs: Minimum horizontal stiffness equal to 75 percent vertical stiffness, with working deflection between 0.3 and 0.6 of maximum deflection.
3. Housings: Incorporate neoprene isolation pad meeting requirements for neoprene pad isolators or rubber hanger with threaded insert.
4. Misalignment: Capable of 20 degree hanger rod misalignment.

G. Neoprene Pad Isolators:

1. Rubber or neoprene-waffle pads.

a. 30 durometer.
b. Minimum 1/2 inch thick.
c. Maximum loading 40 psi.
d. Height of ribs: not to exceed 0.7 times width.

2. Configuration: 1/2 inch thick waffle pads bonded each side of 1/4 inch thick steel plate.

H. Rubber Mount or Hanger: Molded rubber designed for 0.5 inches deflection with threaded insert.

I. Glass Fiber Pads: Neoprene jacketed pre-compressed molded glass fiber.

J. Seismic Snubbers:

1. Type: Non-directional and double acting unit consisting of interlocking steel members restrained by neoprene elements.
2. Neoprene Elements: Replaceable, minimum of 0.75 inch thick.
3. Capacity: 4 times load assigned to mount groupings at 0.4 inch deflection.
4. Attachment Points and Fasteners: Capable of withstanding 3 times rated load capacity of seismic snubber.

PART 3 - EXECUTION

3.1 EXAMINATION

A. Section 01 30 00 - Administrative Requirements: Coordination and project conditions.

B. Verify equipment and piping is installed before work in this section is started.

3.2 INSTALLATION

A. Install isolation for motor driven equipment.

B. Bases:

1. Set steel bases for 1 inch clearance between housekeeping pad and base.
2. Set concrete inertia bases for 2 inch clearance between housekeeping pad and base.

C. Adjust equipment level.

D. Install spring hangers without binding.

E. On closed spring isolators, adjust so side stabilizers are clear under normal operating conditions.

F. Prior to making piping connections to equipment with operating weights substantially different from installed weights, block up equipment with temporary shims to final height. When full load is applied, adjust isolators to load to allow shim removal.

G. Provide pairs of horizontal limit springs on fans with more than 6.0 inch static pressure, and on hanger supported, horizontally mounted axial fans.

H. Provide resiliently mounted equipment and piping with seismic snubbers. Provide each inertia base with minimum of four seismic snubbers located close to isolators. Snub equipment designated for post disaster use to 0.05 inch maximum clearance. Provide other snubbers with clearance between 0.15 inch and 0.25 inch.

I. Support piping connections to isolated equipment resiliently as follows:

1. Up to 4 inch Diameter: First three points of support.
2. 5 to 8 inch Diameter: First four points of support.
3. 10 inch Diameter and Over: First six points of support.
4. Select three hangers closest to vibration source for minimum 1.0 inch static deflection or static deflection of isolated equipment. Select remaining isolators for minimum 1.0 inch static deflection or 1/2 static deflection of isolated equipment.

3.3 FIELD QUALITY CONTROL

A. Section 01 40 00 - Quality Requirements or 017000 - Execution and Closeout Requirements: Field inspecting, testing, adjusting, and balancing.

B. Inspect isolated equipment after installation and submit report. Include static deflections.

C. Refer to Section 23 05 93 for sound measurements.

D. After start-up, final corrections and balancing of systems take octave band sound measurements over full audio frequency range in areas adjacent to plumbing equipment rooms, duct and pipe shafts, and other critical locations. Provide one-third octave band measurements of artificial sound sources in areas indicated as having critical requirements. Submit complete report of test results including sound curves.

E. Furnish services of testing agency to take noise measurement. Use meters meeting requirements of ANSI S1.4.

END OF SECTION

SECTION 22 05 53

IDENTIFICATION FOR PLUMBING PIPING AND EQUIPMENT

PART 1 - GENERAL

1.1 SUMMARY

A. Section Includes:

1. Nameplates.
2. Tags.
3. Stencils.
4. Pipe markers.
5. Ceiling tacks.
6. Labels.
7. Lockout devices.

B. Related Sections:

1. Section 09 90 00 - Painting and Coating: Execution requirements for painting specified by this section.

1.2 REFERENCES

A. American Society of Mechanical Engineers:

1. ASME A13.1 - Scheme for the Identification of Piping Systems.

1.3 SUBMITTALS

A. Section 01 33 00 - Submittal Procedures: Submittal procedures.

B. Product Data: Submit manufacturers catalog literature for each product required.

C. Shop Drawings: Submit list of wording, symbols, letter size, and color coding for mechanical identification and valve chart and schedule, including valve tag number, location, function, and valve manufacturer's name and model number.

D. Samples: Submit two tags, labels, pipe markers, and ceiling tacks, size used on project.

E. Manufacturer's Installation Instructions: Indicate installation instructions, special procedures, and installation.

F. Manufacturer's Certificate: Certify products meet or exceed specified requirements.

1.4 CLOSEOUT SUBMITTALS

A. Section 01 70 00 - Execution and Closeout Requirements: Closeout procedures.

B. Project Record Documents: Record actual locations of tagged valves; include valve tag numbers.

1.5 QUALITY ASSURANCE

A. Conform to NFPA 99 requirements for labeling and identification of medical gas piping systems and accessories.

B. Conform to ASME A13.1 for color scheme for identification of piping systems and accessories.

C. Maintain one copy of each document on site.

1.6 QUALIFICATIONS

A. Manufacturer: Company specializing in manufacturing products specified in this section with minimum three years experience.

B. Installer: Company specializing in performing Work of this section with minimum three years experience.

1.7 PRE-INSTALLATION MEETINGS

A. Section 01 30 00 - Administrative Requirements: Pre-installation meeting.

B. Convene minimum one week prior to commencing work of this section.

1.8 FIELD MEASUREMENTS

A. Verify field measurements prior to fabrication.

1.9 EXTRA MATERIALS

A. Section 01 70 00 - Execution and Closeout Requirements: Spare parts and maintenance products.

B. Furnish two containers of spray-on adhesive.

PART 2 - PRODUCTS

2.1 NAMEPLATES

A. Manufacturers:

1. Craftmark Pipe Markers.
2. Kolbi Pipe Marker Co.
3. Seton Identification Products; a Brady Corporation company.
4. Substitutions: Section 01 60 00 - Product Requirements.

B. Product Description: Laminated three-layer plastic with engraved black letters on light contrasting background color.

2.2 TAGS

A. Plastic Tags:

1. Manufacturers:

a. Brady ID.
b. Craftmark Pipe Markers.
c. Kolbi Pipe Marker Co.
d. R & R Identification Co.
e. Seton Identification Products; a Brady Corporation company.
f. Substitutions: Section 01 60 00 - Product Requirements.

2. Laminated three-layer plastic with engraved black letters on light contrasting background color. Tag size minimum 1-1/2 inches diameter.

B. Metal Tags:

1. Manufacturers:

a. Brady ID.
b. Craftmark Pipe Markers.
c. Kolbi Pipe Marker Co.
d. R & R Identification Co.
e. Seton Identification Products; a Brady Corporation company.
f. Substitutions: Section 01 60 00 - Product Requirements.

2. Brass with stamped letters; tag size minimum 1-1/2 inches diameter with finished edges.

C. Information Tags:

1. Manufacturers:

a. Brady ID.
b. Seton Identification Products; a Brady Corporation company.
c. Substitutions: Section 01 60 00 - Product Requirements.

2. White plastic with printed "Danger," "Caution," or "Warning" and message; size 3-1/4 x 5-5/8 inches with grommet and self-locking nylon ties.

D. Tag Chart: Typewritten letter size list of applied tags and location in anodized aluminum frame.

2.3 STENCILS

A. Manufacturers:

1. Kolbi Pipe Marker Co.
2. R & R Identification Co.
3. Seton Identification Products; a Brady Corporation company.
4. Substitutions: Section 01 60 00 - Product Requirements.

B. Stencils: With clean cut symbols and letters of following size:

1. Up to 2 inches Outside Diameter of Insulation or Pipe: 1/2 inch high letters.
2. 2-1/2 to 6 inches Outside Diameter of Insulation or Pipe: 1-inch high letters.
3. Over 6 inches Outside Diameter of Insulation or Pipe: 1-3/4 inches high letters.
4. Ductwork and Equipment: 1-3/4 inches high letters.

C. Stencil Paint: As specified in Section 09 90 00, semi-gloss enamel, colors and lettering size conforming to ASME A13.1.

2.4 PIPE MARKERS

A. Color and Lettering: Conform to ASME A13.1.

B. Plastic Pipe Markers

1. Manufacturers:

a. Brady ID.
b. Craftmark Pipe Markers.
c. R & R Identification Co.
d. Seton Identification Products; a Brady Corporation company.
e. Substitutions: Section 01 60 00 - Product Requirements.

2. Factory fabricated, flexible, semi-rigid plastic, preformed to fit around pipe or pipe covering. Larger sizes may have maximum sheet size with spring fastener.

C. Plastic Tape Pipe Markers

1. Manufacturers:

a. Brady ID.
b. Craftmark Pipe Markers.
c. Kolbi Pipe Marker Co.
d. Seton Identification Products; a Brady Corporation company.
e. Substitutions: Section 01 60 00 - Product Requirements.

2. Flexible, vinyl film tape with pressure sensitive adhesive backing and printed markings.

D. Plastic Underground Pipe Markers

1. Manufacturers:

a. Kolbi Pipe Marker Co.
b. Seton Identification Products; a Brady Corporation company.
c. Substitutions: Section 01 60 00 - Product Requirements.

2. Bright colored continuously printed plastic ribbon tape, minimum 6 inches wide by 4 mil thick, manufactured for direct burial service.

2.5 CEILING TACKS

A. Manufacturers:

1. Marking Services, Inc.
2. R & R Identification Co.
3. Seton Identification Products; a Brady Corporation company.
4. Substitutions: Section 01 60 00 - Product Requirements.

B. Description: Steel with 3/4 inch diameter color-coded head.

2.6 LABELS

A. Manufacturers:

1. Brady ID.
2. Seton Identification Products; a Brady Corporation company.
3. Substitutions: Section 01 60 00 - Product Requirements.

B. Description: Aluminum, size 1.9 x 0.75 inches, adhesive backed with printed identification.

PART 3 - EXECUTION

3.1 PREPARATION

A. Degrease and clean surfaces to receive adhesive for identification materials.

B. Prepare surfaces in accordance with Section 09 90 00 for stencil painting.

3.2 INSTALLATION

A. Apply stencil painting in accordance with Section 09 90 00.

B. Install identifying devices after completion of coverings and painting.

C. Install plastic nameplates with corrosive-resistant mechanical fasteners, or adhesive.

D. Install labels with sufficient adhesive for permanent adhesion and seal with clear lacquer. For unfinished canvas covering, apply paint primer before applying labels.

E. Install tags using corrosion resistant chain. Number tags consecutively by location.

F. Install underground plastic pipe markers 6 to 8 inches below finished grade, directly above buried pipe.

G. Identify water heaters, pumps, tanks, and water treatment devices with plastic nameplates. Identify in-line pumps and other small devices with tags.

H. Identify control panels and major control components outside panels with plastic nameplates.

I. Identify valves in main and branch piping with tags.

J. Identify piping, concealed or exposed, with plastic pipe markers or plastic tape pipe markers. Use tags on piping 3/4 inch diameter and smaller. Identify service, flow direction, and pressure. Install in clear view and align with axis of piping. Locate identification not to exceed 20 feet on straight runs including risers and drops, adjacent to each valve and tee, at each side of penetration of structure or enclosure, and at each obstruction.

K. Provide ceiling tacks to locate valves above T-bar type panel ceilings. Locate in corner of panel closest to equipment.

END OF SECTION

SECTION 22 07 00

PLUMBING INSULATION

PART 1 - GENERAL

1.1 SUMMARY

A. Section Includes:

1. Plumbing piping insulation, jackets and accessories.
2. Plumbing equipment insulation, jackets and accessories.

B. Related Sections:

1. Section 07 84 00 - Firestopping: Product requirements for firestopping for placement by this section.
2. Section 09 90 00 - Painting and Coating: Execution requirements for painting insulation jackets and covering specified by this section.

1.2 REFERENCES

A. ASTM International:

1. ASTM C450 - Standard Practice for Fabrication of Thermal Insulating Fitting Covers for NPS Piping, and Vessel Lagging.
2. ASTM C547 - Standard Specification for Mineral Fiber Pipe Insulation.
3. ASTM C553 - Standard Specification for Mineral Fiber Blanket Thermal Insulation for Commercial and Industrial Applications.
4. ASTM C585 - Standard Practice for Inner and Outer Diameters of Rigid Thermal Insulation for Nominal Sizes of Pipe and Tubing (NPS System).
5. ASTM C1136 - Standard Specification for Flexible, Low Permeance Vapor Retarders for Thermal Insulation.
6. ASTM D1785 - Standard Specification for Poly (Vinyl Chloride) (PVC) Plastic Pipe, Schedule 40, 80, and 120.

1.3 SUBMITTALS

A. Section 01 33 00 - Submittal Procedures: Submittal procedures.

B. Product Data: Submit product description, thermal characteristics and list of materials and thickness for each service, and location.

C. Samples: Submit two samples of representative size illustrating each insulation type.

D. Manufacturer's Installation Instructions: Submit manufacturers published literature indicating proper installation procedures.

E. Manufacturer's Certificate: Certify products meet or exceed specified requirements.

1.4 QUALITY ASSURANCE

A. Test pipe insulation for maximum flame spread index of 25 and maximum smoke developed index of not exceeding 450 in accordance with ASTM E84.

B. Pipe insulation manufactured in accordance with ASTM C585 for inner and outer diameters.

C. Factory fabricated fitting covers manufactured in accordance with ASTM C450.

D. Maintain one copy of each document on site.

1.5 QUALIFICATIONS

A. Manufacturer: Company specializing in manufacturing products specified in this section with minimum three years experience.

B. Applicator: Company specializing in performing Work of this section with minimum three years experience.

1.6 PRE-INSTALLATION MEETINGS

A. Section 01 30 00 - Administrative Requirements: Pre-installation meeting.

B. Convene minimum one week prior to commencing work of this section.

1.7 DELIVERY, STORAGE, AND HANDLING

A. Section 01 60 00 - Product Requirements: Requirements for transporting, handling, storing, and protecting products.

B. Accept materials on site in original factory packaging, labeled with manufacturer's identification, including product density and thickness.

C. Protect insulation from weather and construction traffic, dirt, water, chemical, and damage, by storing in original wrapping.

1.8 ENVIRONMENTAL REQUIREMENTS

A. Section 01 60 00 - Product Requirements: Environmental conditions affecting products on site.

B. Install insulation only when ambient temperature and humidity conditions are within range recommended by manufacturer.

C. Maintain temperature before, during, and after installation for minimum period of 24 hours.

1.9 FIELD MEASUREMENTS

A. Verify field measurements prior to fabrication.

1.10 WARRANTY

A. Section 01 70 00 - Execution and Closeout Requirements: Product warranties and product bonds.

B. Furnish five year manufacturer warranty for man made fiber.

PART 2 - PRODUCTS

2.1 MANUFACTURER

A. Glass Fiber and Mineral Fiber Insulation

1. Manufacturers:

a. CertainTeed LLC; Saint-Gobain North America.
b. Johns Manville; a Berkshire Hathaway company.
c. Knauf Insulation.
d. Owens Corning.
e. Substitutions: Section 01 60 00 - Product Requirements.

2.2 PIPE INSULATION

A. TYPE P-1: ASTM C547, molded glass fiber pipe insulation.

1. Thermal Conductivity: 0.23 at 75 degrees F.
2. Operating Temperature Range: 0 to 850 degrees F.
3. Vapor Barrier Jacket: ASTM C1136, Type I, factory applied reinforced foil kraft with self-sealing adhesive joints.
4. Jacket Temperature Limit: minus 20 to 150 degrees F.

2.3 PIPE INSULATION JACKETS

A. Vapor Retarder Jacket:

1. ASTM C921, white Kraft paper with glass fiber yarn, bonded to aluminized film.
2. Water Vapor Permeance: ASTM E96/E96M; 0.02 perms.

B. PVC Plastic Pipe Jacket:

1. Product Description: ASTM D1785, One piece molded type fitting covers and sheet material, off-white color.
2. Thickness: 30 mil.
3. Connections: Brush on welding adhesive.

C. ABS Plastic Pipe Jacket:

1. Jacket: One piece molded type fitting covers and sheet material, off-white color.
2. Minimum service temperature: -40 degrees F.
3. Maximum service temperature of 180 degrees F.
4. Water Vapor Permeance: ASTM E96/E96M; 0.02 perms.

5. Thickness: 30 mil.
6. Connections: Brush on welding adhesive.

2.4 PIPE INSULATION ACCESSORIES

A. Vapor Retarder Lap Adhesive: Compatible with insulation.

B. Covering Adhesive Mastic: Compatible with insulation.

2.5 EQUIPMENT INSULATION

A. ASTM C553; glass fiber, flexible or semi-rigid, noncombustible.

1. Thermal Conductivity: 0.023 at 75 degrees F.
2. Operating Temperature Range: 0 to 450 degrees F.
3. Density: 2.3 pound per cubic foot.

2.6 EQUIPMENT INSULATION JACKETS

A. PVC Plastic Equipment Jacket:

1. Product Description: ASTM D1785, sheet material, off-white color.
2. Minimum Service Temperature: -40 degrees F.
3. Maximum Service Temperature: 150 degrees F.
4. Water Vapor Permeance: ASTM E96/E96M; 0.02 perms.
5. Thickness: 30 mil.
6. Connections: Brush on welding adhesive.

B. Aluminum Equipment Jacket:

1. ASTM B209.
2. Thickness: 0.020 inch thick sheet.
3. Finish: Embossed.
4. Joining: Longitudinal slip joints and 2 inch laps.
5. Fittings: 0.016 inch thick die shaped fitting covers with factory attached protective liner.
6. Metal Jacket Bands: 3/8 inch wide;

C. Stainless Steel Equipment Jacket:

1. ASTM ASTM A240/A240M OR ASTM 666 Type 304 stainless steel.
2. Thickness: 0.016 inch thick.
3. Finish: Corrugated.
4. Metal Jacket Bands: 3/8 inch wide; 0.010 inch thick stainless steel.

D. Canvas Equipment Jacket: UL listed, 6 oz/sq yd, plain weave cotton fabric with fire retardant lagging adhesive compatible with insulation.

E. Vapor Retarder Jacket:

1. ASTM C921, white Kraft paper with glass fiber yarn, bonded to aluminized film.
2. Water Vapor Permeance: ASTM E96/E96M; 0.02 perms.

F. Field Applied Glass Fiber Fabric Jacket System:

1. Insulating Cement/Mastic: ASTM C195; hydraulic setting on mineral wool.
2. Glass Fiber Fabric:

a. Cloth: Untreated; 9 oz/sq yd weight.
b. Blanket: 1.0 lb/cu ft density.

3. Indoor Vapor Retarder Finish:

a. Cloth: Untreated; 9 oz/sq yd weight.
b. Vinyl emulsion type acrylic, compatible with insulation, white color.

2.7 EQUIPMENT INSULATION ACCESSORIES

A. Vapor Retarder Lap Adhesive: Compatible with insulation.

B. Covering Adhesive Mastic: Compatible with insulation.

C. Tie Wire: 0.048 inch stainless steel with twisted ends on maximum 12 inch centers.

D. Mineral Fiber Hydraulic-Setting Thermal Insulating and Finishing Cement: ASTM C449/C449M.

E. Adhesives: Compatible with insulation.

PART 3 - EXECUTION

3.1 EXAMINATION

A. Section 01 30 00 - Administrative Requirements: Coordination and project conditions.

B. Verify piping and equipment has been tested before applying insulation materials.

C. Verify surfaces are clean and dry, with foreign material removed.

3.2 INSTALLATION - PIPING SYSTEMS

A. Piping Exposed to View in Finished Spaces: Locate insulation and cover seams in least visible locations.

B. Continue insulation through penetrations of building assemblies or portions of assemblies having fire resistance rating of one hour or less. Provide intumescent firestopping when continuing insulation through assembly. Finish at supports, protrusions, and interruptions. Refer to Section 07 84 00 for penetrations of assemblies with fire resistance rating greater than one hour.

C. Piping Systems Conveying Fluids Below Ambient Temperature:

1. Insulate entire system including fittings, valves, unions, flanges, strainers, flexible connections, and expansion joints.

2. Furnish factory-applied or field-applied vapor retarder jackets. Secure factory-applied jackets with pressure sensitive adhesive self-sealing longitudinal laps and butt strips. Secure field-applied jackets with outward clinch expanding staples and seal staple penetrations with vapor retarder mastic.
3. Insulate fittings, joints, and valves with molded insulation of like material and thickness as adjacent pipe. Finish with glass cloth and vapor retarder adhesive or PVC fitting covers.

D. Glass Fiber Board Insulation:

1. Apply insulation close to equipment by grooving, scoring, and beveling insulation. Fasten insulation to equipment with studs, pins, clips, adhesive, wires, or bands.
2. Fill joints, cracks, seams, and depressions with bedding compound to form smooth surface. On cold equipment, use vapor retarder cement.
3. Cover wire mesh or bands with cement to a thickness to remove surface irregularities.

E. Hot Piping Systems less than 140 degrees F:

1. Furnish factory-applied or field-applied standard jackets. Secure with outward clinch expanding staples or pressure sensitive adhesive system on standard factory-applied jacket and butt strips or both.
2. Insulate fittings, joints, and valves with insulation of like material and thickness as adjoining pipe. Finish with glass cloth and adhesive or PVC fitting covers.
3. Do not insulate unions and flanges at equipment, but bevel and seal ends of insulation at such locations.

F. Hot Piping Systems greater than 140 degrees F:

1. Furnish factory-applied or field-applied standard jackets. Secure with outward clinch expanding staples or pressure sensitive adhesive system on standard factory-applied jacket and butt strips or both.
2. Insulate fittings, joints, and valves with insulation of like material and thickness as adjoining pipe. Finish with glass cloth and adhesive or PVC fitting covers.
3. Insulate flanges and unions at equipment.

G. Inserts and Shields:

1. Piping 1-1/2 inches Diameter and Smaller: Install steel shield between pipe hanger and insulation.
2. Piping 2 inches Diameter and Larger: Install insert between support shield and piping and under finish jacket.

    a. Insert Configuration: Minimum 6 inches long, of thickness and contour matching adjoining insulation; may be factory fabricated.
    b. Insert Material: Compression resistant insulating material suitable for planned temperature range and service.

3. Piping Supported by Roller Type Pipe Hangers: Install galvanized steel shield between roller and inserts.

H. Insulation Terminating Points:
   1. Condensate Piping: Insulate entire piping system and components to prevent condensation.

I. Piping Exterior to Building: Provide vapor retarder jacket. Insulate fittings, joints, and valves with insulation of like material and thickness as adjoining pipe, and finish with glass mesh reinforced vapor retarder cement. Cover with aluminum jacket with seams located at 3 or 9 o'clock position on side of horizontal piping with overlap facing down to shed water or on bottom side of horizontal piping.

J. Buried Piping: Insulate only where insulation manufacturer recommends insulation product may be installed in trench, tunnel or direct buried. Install factory fabricated assembly with inner all-purpose service jacket with self-sealing lap, and asphalt impregnated open mesh glass fabric, with 1 mil thick aluminum foil sandwiched between three layers of bituminous compound; outer surface faced with polyester film.

K. Prepare pipe insulation for finish painting. Refer to Section 09 90 00.

3.3 INSTALLATION - EQUIPMENT

A. Factory Insulated Equipment: Do not insulate.

B. Exposed Equipment: Locate insulation and cover seams in least visible locations.

C. Fill joints, cracks, seams, and depressions with bedding compound to form smooth surface. On cold equipment, use vapor retarder cement.

D. Equipment Containing Fluids Below Ambient Temperature:

   1. Insulate entire equipment surfaces.
   2. Apply insulation close to equipment by grooving, scoring, and beveling insulation. Fasten insulation to equipment with studs, pins, clips, adhesive, wires, or bands.
   3. Furnish factory-applied or field-applied vapor retarder jackets. Secure factory-applied jackets with pressure sensitive adhesive self-sealing longitudinal laps and butt strips. Secure field-applied jackets with outward clinch expanding staples and seal staple penetrations with vapor retarder mastic.
   4. Finish insulation at supports, protrusions, and interruptions.

E. Equipment Containing Fluids Below Ambient Temperature:

   1. Do not insulate flanges and unions, but bevel and seal ends of insulation.
   2. Install insulation with factory-applied or field applied jackets, with or without vapor barrier. Finish with glass cloth and adhesive.
   3. Finish insulation at supports, protrusions, and interruptions.

F. Equipment Located Exterior to Building: Install vapor barrier jacket or finish with glass mesh reinforced vapor barrier cement. Cover with aluminum jacket with seams located on bottom side of horizontal equipment.

G. Cover glass fiber insulation with aluminum jacket.

H. Nameplates and ASME Stamps: Bevel and seal insulation around; do not cover with insulation.

I. Equipment Requiring Access for Maintenance, Repair, or Cleaning: Install insulation for easy removal and replacement without damage.

J. Prepare equipment insulation for finish painting. Refer to Section 09 90 00.

3.4 SCHEDULES

A. Water Supply Services Piping Insulation Schedule:

1. Domestic Hot Water Supply, Return and Condensate Piping:

a. Type: Molded Glass FIber.
b. Thickness:

1) Pipe Size 1 Inch and Smaller: 1 inch.
2) Pipe Size 1-1/4 Inches and Larger: 1.5 inch

END OF SECTION

SECTION 22 11 00

FACILITY WATER DISTRIBUTION

PART 1 - GENERAL

1.1 SUMMARY

A. Section Includes:

1. Domestic water piping, within 5 feet of building.
2. Domestic water piping, above grade.
3. Unions and flanges.
4. General Duty Valves.
5. Pipe hangers and supports.
6. Pressure gages.
7. Pressure gage taps.
8. Thermometers.
9. Flow control valves.
10. Water pressure reducing valves.
11. Relief valves.
12. Strainers.
13. Hose bibs.
14. Hydrants.
15. Recessed valve box.
16. Backflow preventers.
17. Water hammer arrestors.
18. Trap Primers
19. Thermostatic mixing valves.
20. Pressure balanced mixing valves.
21. Diaphragm-type Expansion tanks.
22. In-line circulator pumps.
23. Water Filter System
24. Access Panels.
25. Bedding and cover materials.

B. Related Sections:

1. Section 03 30 00 - Cast-In-Place Concrete: Execution requirements for placement of concrete house keeping pads specified by this section.
2. Section 07 84 00 - Firestopping: Product requirements for firestopping for placement by this section.
3. Section 08 31 13 - Access Doors and Frames: Product requirements for access doors for placement by this section.
4. Section 09 90 00 - Painting and Coating: Product and execution requirements for painting specified by this section.
5. Section 22 05 13 - Common Motor Requirements for Plumbing Equipment: Product requirements for motors for placement by this section.
6. Section 22 05 16 - Expansion Fittings and Loops for Plumbing Piping: Execution requirements for pipe expansion devices for placement by this section.

7. Section 22 05 29 - Hangers and Supports for Plumbing Piping and Equipment: Product requirements for pipe hangers and supports and firestopping for placement by this section.
8. Section 22 05 48 - Vibration and Seismic Controls for Plumbing Piping and Equipment: Product requirements for vibration isolators for placement by this section.
9. Section 22 05 53 - Identification for Plumbing Piping and Equipment: Product requirements for pipe identification and valve tags for placement by this section.
10. Section 22 07 00 - Plumbing Insulation: Product and execution requirements for pipe insulation.
11. Section 26 05 03 - Equipment Wiring Connections: Execution requirements for electric connections to equipment specified by this section.
12. Section 31 05 13 - Soils for Earthwork: Soils for backfill in trenches.
13. Section 31 05 16 - Aggregates for Earthwork: Aggregate for backfill in trenches.
14. Section 31 23 16 - Excavation: Product and execution requirements for excavation and backfill required by this section.
15. Section 31 23 16.13 - Trenching: Execution requirements for trenching required by this section.
16. Section 31 23 23 - Fill: Requirements for backfill to be placed by this section.
17. Section 33 13 00 - Disinfecting of Water Utility Distribution: Product and execution requirements for disinfection of domestic water piping beyond 5 feet (1500 mm) of building.

1.2 REFERENCES

A. American National Standards Institute:

1. ANSI Z21.22 - Relief Valves for Hot Water Supply Systems.

B. American Society of Mechanical Engineers:

1. ASME B16.18 - Cast Copper Alloy Solder Joint Pressure Fittings.
2. ASME B16.22 - Wrought Copper and Copper Alloy Solder Joint Pressure Fittings.
3. ASME B16.26 - Cast Copper Alloy Fittings for Flared Copper Tubes.
4. ASME B31.9 - Building Services Piping.
5. ASME B40.1 - Gauges - Pressure Indicating Dial Type - Elastic Element.
6. ASME Section VIII - Boiler and Pressure Vessel Code - Pressure Vessels.
7. ASME Section IX - Boiler and Pressure Vessel Code - Welding and Brazing Qualifications.

C. American Society of Sanitary Engineering:

1. ASSE 1010 - Performance Requirements for Water Hammer Arresters.
2. ASSE 1011 - Performance Requirements for Hose Connection Vacuum Breakers.
3. ASSE 1013 - Performance Requirements for Reduced Pressure Principle Backflow Preventers and Reduced Pressure Fire Protection Principle Backflow Preventers.
4. ASSE 1019 - Performance Requirements for Vacuum Breaker Wall Hydrants, Freeze Resistant, Automatic Draining Type.

5. ASSE 5013 - Performance Requirements for Reduced Pressure Principle Backflow Preventers (RP) and Reduced Pressure Fire Protection Principle Backflow Preventers (RFP).
6. ASSE 5015 - Performance Requirements for Testing Double Check Backflow Prevention Assemblies (DC) and Double Check Fire Protection Backflow Prevention Assemblies (RPDF).

D. ASTM International:

1. ASTM B32 - Standard Specification for Solder Metal.
2. ASTM B42 - Standard Specification for Seamless Copper Pipe, Standard Sizes.
3. ASTM B88 - Standard Specification for Seamless Copper Water Tube.
4. ASTM B584 - Standard Specification for Copper Alloy Sand Castings for General Applications.
5. ASTM E1 - Standard Specification for ASTM Thermometers.
6. ASTM E77 - Standard Test Method for Inspection and Verification of Thermometers.

E. American Welding Society:

1. AWS A5.8 - Specification for Filler Metals for Brazing and Braze Welding.

F. American Water Works Association:

1. AWWA C651 - Disinfecting Water Mains.
2. AWWA M6 - Water Meters - Selection, Installation, Testing, and Maintenance.

G. Manufacturers Standardization Society of the Valve and Fittings Industry:

1. MSS SP 58 - Pipe Hangers and Supports - Materials, Design and Manufacturer.
2. MSS SP 67 - Butterfly Valves.
3. MSS SP 69 - Pipe Hangers and Supports - Selection and Application.
4. MSS SP 80 - Bronze Gate, Globe, Angle and Check Valves.
5. MSS SP 89 - Pipe Hangers and Supports - Fabrication and Installation Practices.
6. MSS SP 110 - Ball Valves Threaded, Socket-Welding, Solder Joint, Grooved and Flared Ends.

H. National Electrical Manufacturers Association:

1. NEMA 250 - Enclosures for Electrical Equipment (1000 Volts Maximum).

I. Plumbing and Drainage Institute:

1. PDI WH201 - Water Hammer Arrester Standard.

J. Underwriters Laboratories Inc.:

1. UL 393 - Indicating Pressure Gauges for Fire-Protection Service.

1.3 SUBMITTALS

A. Section 01 33 00 - Submittal Procedures: Submittal procedures.

B. Product Data:

1. Piping: Submit data on pipe materials, fittings, and accessories. Submit manufacturer's catalog information.
2. Valves: Submit manufacturers catalog information with valve data and ratings for each service.
3. Hangers and Supports: Submit manufacturers catalog information including load capacity.
4. Domestic Water Specialties: Submit manufacturers catalog information, component sizes, rough-in requirements, service sizes, and finishes.
5. Pumps: Submit pump type, capacity, certified pump curves showing pump performance characteristics with pump and system operating point plotted. Include NPSH curve when applicable. Include electrical characteristics and connection requirements.

C. Manufacturer's Installation Instructions: Submit installation instructions for pumps, valves and accessories.

D. Manufacturer's Certificate: Certify products meet or exceed specified requirements.

1.4 CLOSEOUT SUBMITTALS

A. Section 01 70 00 - Execution and Closeout Requirements: Closeout procedures.

B. Project Record Documents: Record actual locations of valves and equipment.

C. Operation and Maintenance Data: Submit spare parts list, exploded assembly views and recommended maintenance intervals.

1.5 QUALITY ASSURANCE

A. For drinking water service, provide valves complying with NSF 61.

B. Maintain one copy of each document on site.

1.6 QUALIFICATIONS

A. Manufacturer: Company specializing in manufacturing products specified in this section with minimum three years experience.

B. Installer: Company specializing in performing Work of this section with minimum three years experience.

1.7 PRE-INSTALLATION MEETINGS

A. Section 01 30 00 - Administrative Requirements: Pre-installation meeting.

B. Convene minimum one week prior to commencing Work of this Section.

1.8 DELIVERY, STORAGE, AND HANDLING

A. Section 01 60 00 - Product Requirements: Product storage and handling requirements.

B. Accept valves and equipment on site in shipping containers with labeling in place. Inspect for damage.

C. Provide temporary protective coating on cast iron and steel valves.

D. Provide temporary end caps and closures on piping and fittings. Maintain in place until installation.

E. Protect piping systems from entry of foreign materials by temporary covers, completing sections of the Work, and isolating parts of completed system.

1.9 ENVIRONMENTAL REQUIREMENTS

A. Section 01 60 00 - Product Requirements.

B. Do not install underground piping when bedding is wet or frozen.

1.10 FIELD MEASUREMENTS

A. Verify field measurements prior to fabrication.

1.11 WARRANTY

A. Section 01 70 00 - Execution and Closeout Requirements: Product warranties and product bonds.

B. Furnish five year manufacturer warranty for domestic water piping.

1.12 EXTRA MATERIALS

A. Section 01 70 00 - Execution and Closeout Requirements: Spare parts and maintenance products.

B. Furnish two packing kits for each size valve, two loose keys for outside hose bibs, hose end, vacuum breakers for hose bibs service kits for and two pump seals for each pump model.

PART 2 - PRODUCTS

2.1 DOMESTIC WATER PIPING, BURIED WITHIN 5 FEET OF BUILDING

A. Copper Tubing: ASTM B88, Type K, annealed.

1. Fittings: ASME B16.18, cast copper, or ASME B16.22, wrought copper.
2. Joints: Compression connection or Brazed, AWS A5.8 BCuP silver/phosphorus/copper alloy with melting range 1190 to 1480 degrees F.

2.2 DOMESTIC WATER PIPING, ABOVE GRADE

A. Copper Tubing: ASTM B88, Type L, drawn.

1. Fittings: ASME B16.18, cast copper alloy or ASME B16.22, wrought copper and bronze.
2. Joints: ASTM B32, Alloy Grade Sb5 tin-antimony, or Alloy Grade Sn95 tin-silver, lead free solder, AWS A5.8 Classification BCuP-3 or BCuP-4 silver braze.

2.3 FLUE AND COMBUSTION AIR PIPING

A. PVC Pipe: ASTM D1785, Schedule 40, polyvinyl chloride (PVC) material.

1. Fittings: ASTM D2466, Schedule 40, PVC.
2. Joints: ASTM D2855, solvent weld with ASTM D2564 solvent cement. Prime joints with a contrasting color.

2.4 UNIONS AND FLANGES

A. Unions for Pipe 2 inches and Smaller:

1. Ferrous Piping: Class 150, malleable iron, threaded.
2. Copper Piping: Class 150, bronze unions with soldered brazed joints.
3. Dielectric Connections: Union with galvanized or plated steel threaded end, copper solder end, water impervious isolation barrier.
4. PVC Piping: PVC.
5. CPVC Piping: CPVC.

B. Flanges for Pipe 2-1/2 inches and Larger:

1. Ferrous Piping: Class 150, forged steel, slip-on flanges.
2. Copper Piping: Class 150, slip-on bronze flanges.
3. PVC Piping: PVC flanges.
4. CPVC Piping: CPVC flanges.
5. Gaskets: 1/16 inch thick preformed neoprene gaskets.

2.5 GENERAL DUTY VALVES

A. BALL VALVES

1. Manufacturers:

a. Apollo Valves; a part of Aalberts Integrated Piping Systems.
b. Crane; a Crane Co. brand.
c. Hammond Valve.
d. KITZ Corporation.
e. Milwaukee Valve Company.
f. NIBCO INC.
g. Stockham; a Crane Co. brand.
h. Zurn Industries, LLC.

2. Substitutions: Section 01 60 00 - Product Requirements.
3. 2 inches and Smaller: MSS SP 110, 400 psi WOG, two piece bronze body, chrome plated brass ball, full port, teflon seats, blow-out proof stem, threaded ends with union, lever handle.
4. 2 inches and Smaller: MSS SP 110, Class 150, bronze, two piece body, type 316 stainless steel ball, full port, teflon seats, blow-out proof stem, threaded ends with union, lever handle.
5. 2 inches and Smaller: MSS SP 110, Class 150, bronze, three piece body, type 316 stainless steel ball, full port, teflon seats, blow-out proof stem, threaded ends, lever handle.

B. BUTTERFLY VALVES

1. Manufacturers:

   a. American Valve, Inc.
   b. Apollo Valves; a part of Aalberts Integrated Piping Systems.
   c. Crane; a Crane Co. brand.
   d. DeZURIK.
   e. Hammond Valve.
   f. KITZ Corporation.
   g. Milwaukee Valve Company.
   h. NIBCO INC.
   i. Stockham; a Crane Co. brand.
   j. WATTS.

2. Substitutions: Section 01 60 00 - Product Requirements.
3. 2-1/2 inches and Larger: MSS SP 67, Class 150.

   a. Body: Cast or ductile iron, wafer or lug ends, stainless steel stem, extended neck.
   b. Disc: Aluminum bronze or stainless steel.
   c. Seat: Resilient replaceable EPDM.
   d. Handle and Operator: 10 position lever handle.

C. CHECK VALVES

1. Horizontal Swing Check Valves:

   a. Manufacturers:

      1) Anvil International/Smith-Cooper International; Tailwind Capital, LLC.
      2) APCO DeZurik Valve Co.
      3) Crane; a Crane Co. brand.
      4) Hammond Valve.
      5) Milwaukee Valve Company.
      6) NIBCO INC.

   b. Substitutions: Section 01 60 00 - Product Requirements.
   c. 2 inches and Smaller: MSS SP 80, Class 150, bronze body and cap, bronze seat, Buna-N disc, solder or threaded ends.

d. 2-1/2 inches and Larger: MSS SP 71, Class 125, cast iron body, bolted cap, bronze or cast iron disc, renewable disc seal and seat, flanged ends.

2. Spring Loaded Check Valves:

a. Manufacturers:

1) Hammond Valve.
2) Krombach; Crane Energy Flow Solutions.
3) NIBCO INC.

b. Substitutions: Section 01 60 00 - Product Requirements.
c. 2 inches and Smaller: MSS SP 80, Class 250, bronze body, in-line spring lift check, silent closing, Buna-N disc, integral seat, solder or threaded ends.
d. 2-1/2 inches and Larger: MSS SP 71, Class 125, wafer globe style, cast iron body, bronze seat, center guided bronze disc, stainless steel spring and screws, flanged ends.

2.6 PIPE HANGERS AND SUPPORTS

A. Refer to Section 22 05 29.

2.7 PRESSURE GAGES

A. Manufacturers:

1. Trerice.
2. Ameter, Inc..
3. Weiss.
4. Zurn Industries, LLC.

B. Substitutions: Section 01 60 00 - Product Requirements.

C. Gage: ASME B40.1, UL 393 with bourdon tube, rotary brass movement, brass socket, front calibration adjustment, black scale on white background.

1. Case: Steel.
2. Bourdon Tube: Brass.
3. Dial Size: 3-1/2 inch diameter.
4. Mid-Scale Accuracy: One percent.
5. Scale: Psi.

2.8 PRESSURE GAGE TAPS

A. Manufacturers:

1. Trerice.
2. Ameter, Inc..
3. Weiss.

B. Substitutions: Section 01 60 00 - Product Requirements.

C. Substitutions: Section 01 60 00 - Product Requirements.

D. Needle Valve: Brass, 1/4 inch NPT for minimum 300 psi.

E. Ball Valve: Brass, 1/8 inch NPT for 250 psi.

F. Pulsation Damper: Pressure snubber, brass with 1/4 inch NPT connections.

2.9 STEM TYPE THERMOMETERS

A. Manufacturers:

1. KOBOLD Instruments, Inc. - USA.
2. Marsh Bellofram.
3. Weiss Instruments, Inc.

B. Substitutions: Section 01 60 00 - Product Requirements.

C. Thermometer: ASTM E1, red appearing mercury, lens front tube, cast aluminum case with enamel finish.

1. Size: 7-inch scale.
2. Window: Clear glass.
3. Stem: Brass, 3/4 inch NPT, 3-1/2 inch long.
4. Accuracy: 2 percent.
5. Calibration: Both degrees F and degrees C.

2.10 FLOW CONTROL VALVES

A. Manufacturers:

1. Bell & Gossett.
2. Griswold.
3. Flocon.
4. NIBCO INC.
5. WATTS.
6. Zurn Industries, LLC.

B. Substitutions: Section 01 60 00 - Product Requirements.

C. Construction: Class 125, Brass or bronze body with union on inlet and outlet, temperature and pressure test plug on inlet and outlet.

D. Calibration: Control flow within 5 percent of selected rating, over operating pressure range of 10 times minimum pressure required for control, maximum minimum pressure 5 psi.

2.11 WATER PRESSURE REDUCING VALVES

A. Manufacturers:

1. Zurn Industries, LLC

2. Conbraco.
3. WATTS.
4. Cla-Val

B. Substitutions: Section 01 60 00 - Product Requirements.

C. 2 inches and Smaller: MSS SP 80, bronze body, stainless steel and thermoplastic internal parts, fabric reinforced diaphragm, strainer, threaded ends.

D. 2 inches and Larger: MSS SP 85, cast iron body, bronze fitted, elastomeric diaphragm and seat disc, flanged.

2.12 RELIEF VALVES

A. Manufacturers:

1. Zurn Industries, LLC.
2. Conbraco.
3. WATTS.
4. Cla-Val.

B. Substitutions: Section 01 60 00 - Product Requirements.

C. Pressure Relief:

1. ANSI Z21.22 certified, bronze body, teflon seat, steel stem and springs, automatic, direct pressure actuated.

D. Temperature and Pressure Relief:

1. ANSI Z21.22 certified, bronze body, teflon seat, stainless steel stem and springs, automatic, direct pressure actuated, temperature relief maximum 210 degrees F, capacity ASME certified and labeled.

2.13 STRAINERS

A. Manufacturers:

1. Conbraco.
2. WATTS.
3. NIBCO INC.
4. Zurn Industries, LLC.

B. Substitutions: Section 01 60 00 - Product Requirements.

C. 2 inch and Smaller: Threaded brass body for 175 psi CWP, Y pattern with 1/32 inch stainless steel perforated screen.

D. 1-1/2 inch to 4 inch: Class 125, flanged iron body, Y pattern with 1/16-inch stainless steel perforated screen.

E. 5 inch and Larger: Class 125, flanged iron body, basket pattern with 1/8 inch stainless steel perforated screen.

2.14 HOSE BIBS (SEE SCHEDULE FOR AMEK & MODEL)

A. Manufacturers:

1. Acorn.
2. MiFAB.
3. J.R. Smith.

B. Substitutions: Section 01 60 00 - Product Requirements.

C. Interior: Bronze or brass with integral mounting flange, replaceable hexagonal disc, hose thread spout, chrome plated where exposed with lock shield and removable key, integral vacuum breaker in conformance with ASSE 1011.

2.15 HYDRANTS (SEE SCHEDULE FOR MAKE & MODEL)

A. Manufacturers:

1. Acorn.
2. MiFAB.
3. J.R. Smith.

B. Substitutions: Section 01 60 00 - Product Requirements.

C. Wall Hydrant: ASSE 1019; non-freeze, self-draining type with chrome plated lockable recessed box hose thread spout, locks shield and removable key, and integral vacuum breaker.

2.16 RECESSED VALVE BOX (SEE SCHEDULE FOR MAKE & MODEL)

A. Manufacturers:

1. IPS Corporation.
2. Sioux Chief Manufacturing.

B. Substitutions: Section 01 60 00 - Product Requirements.

C. Washing Machine: Plastic preformed rough-in box with brass valves with single lever handle, socket for 2 inch waste, slip in finishing cover.

D. Refrigerator: Plastic preformed rough-in box with brass valves with wheel handle slip in finishing cover.

E. Ice Machine: The box shall contain lead-free quarter turn valve with integral water hammer arrestor. Valve shall comply with ASME A112.18.1 and water hammer arrestor shall comply with ASSE 1010.

2.17 BACKFLOW PREVENTERS

A. Manufacturers:

1. FEBCO; A WATTS Brand.
2. NIBCO INC.
3. WATTS.
4. Zurn Industries, LLC.

B. Substitutions: Section 01 60 00 - Product Requirements.

C. Reduced Pressure Backflow Preventers:

1. Comply with ASSE 1013.
2. Bronze body, with bronze internal parts and stainless steel springs.
3. Two independently operating, spring loaded check valves; diaphragm type differential pressure relief valve located between check valves; third check valve opening under back pressure in case of diaphragm failure; non-threaded vent outlet; assembled with two gate valves, strainer, and four test cocks.

D. Double Check Valve Assemblies: Comply with ASSE ASSE 1015 or AWWA C510; Bronze body with corrosion resistant internal parts and stainless steel springs; two independently operating check valves with intermediate atmospheric vent.

2.18 WATER HAMMER ARRESTORS (SEE SCHEDULE FOR MAKE & MODEL)

A. Manufacturers:

1. MiFAB.
2. J.R. Smith.
3. Precision Plumbing Products.
4. Zurn Industries, LLC.

B. Substitutions: Section 01 60 00 - Product Requirements.

C. ASSE 1010; stainless steel construction, bellows type sized in accordance with PDI WH-201.

D. Pre-charged suitable for operation in temperature range -100 to 300 degrees F and maximum 250 psi working pressure.

2.19 TRAP PRIMER SYSTEM (SEE SCHEDULE FOR MAKE & MODEL)

A. Manufacturers:

1. MiFAB.
2. Precision Plumbing Products.

B. Automatically Activated:

1. Standard: ASSE 1044, ASSE 1018.
2. Piping: NPS 1/2 inch ASTM B88, Type L, copper, water tubing.

3. Vacuum Breaker: ASSE 1001.
4. Size Outlets: NPS 1/2 inches.
5. Provide distribution unit as required.

C. Electronic:

1. Standard: ASSE 1044, ASSE 1018.
2. Piping: NPS 1/2 inch ASTM B88, Type L, copper, water tubing.
3. Vacuum Breaker: ASSE 1001.
4. Size Outlets: NPS 1/2 inches.
5. Provide distribution unit as required.
6. 120 volt, single phase, 60 Hz

2.20 THERMOSTATIC MIXING VALVES (SEE SCHEDULE FOR MAKE & MODEL)

A. Manufacturers:

1. Chicago Faucets.
2. WATTS.
3. Zurn Industries, LLC.

B. Substitutions: Section 01 60 00 - Product Requirements.

C. Valve: Chrome plated cast brass body, stainless steel or copper alloy bellows, integral temperature adjustment. Conform to ASSE 1070 to temper water to maximum 110 degrees F.

D. Capacity: Refer to Plumbing fixture schedule.

E. Accessories:

1. Check valve on inlets.
2. Volume control shut-off valve on outlet.
3. Stem thermometer on outlet.
4. Strainer stop checks on inlets.

2.21 PRESSURE BALANCED MIXING VALVES (SEE SCHEDULE FOR MAKE & MODEL)

A. Manufacturers:

1. Symmons.
2. Bradley.

B. Substitutions: Section 01 60 00 - Product Requirements.

C. Valve: Chrome plated cast brass body, stainless steel cylinder and integral temperature adjustment.

D. Capacity: Refer to Plumbing fixture schedule.

E. Accessories:

1. Volume control shut-off valve on outlet.
2. Stem thermometer on outlet.
3. Strainer stop checks on inlets.

2.22 DIAPHRAGM-TYPE EXPANSION TANKS (SEE SCHEDULE FOR MAKE & MODEL)

A. Manufacturers:

1. Amtrol.
2. Bell & Gossett; a Xylem brand.
3. Taco.

B. Substitutions: Section 01 60 00 - Product Requirements.

C. Construction: Welded steel, tested and stamped in accordance with ASME Section VIII; supplied with National Board Form U-1, rated for working pressure of 125 psig, with flexible EPDM diaphragm sealed into tank, and steel legs or saddles.

D. Accessories: Pressure gage and air-charging fitting, tank drain; pre-charge to 12 psig.

E. Size: Refer to tank schedule .

2.23 IN-LINE CIRCULATOR PUMPS (SEE SCHEDULE FOR MAKE & MODEL)

A. Manufacturers:

1. Bell & Gossett.
2. Grundfos.
3. Taco Comfort Solutions.

B. Substitutions: Section 01 60 00 - Product Requirements.

C. Casing: Bronze rated for 125 psig working pressure with stainless steel rotor assembly.

D. Impeller: Bronze.

E. Shaft: Alloy steel with integral thrust collar and two, oil lubricated bronze sleeve bearings.

F. Seal: Carbon rotating against stationary ceramic seat.

G. Drive: Flexible coupling.

H. Performance:

1. Flow: Refer to Plumbing schedule.

I. Type: Horizontal shaft, single stage, close coupled, radial split casing, for maximum working pressure.

2.24 WATER FILTER SYSTEM

A. Refer to Food Service drawings

2.25 ACCESS PANELS

A. Manufacturers:

1. Karp.
2. Milcor.
3. Elmdor.
4. J.R. Smith.

B. Panel 8x8 minimum size, but larger if required. Concealed hinge, allen head lock.

C. Styles:

1. Gypsum Board or Masonry: Karp DSC-214M prime coated steel.
2. Tile: Karp DSC-214M stainless steel.
3. Plaster: Karp DSC-214L prime coated steel.
4. Acoustical Plaster: Karp DSC-210PL.
5. Fire Rated Construction: Karp KRP-150FR prime coated steel; UL listed "B" label.

2.26 BEDDING AND COVER MATERIALS

A. Bedding: Fill Type as specified in Division 31.

B. Cover: Fill Type, as specified in Division 31.

C. Soil Backfill from Above Pipe to Finish Grade: Soil Type, as specified in Division 31.

PART 3 - EXECUTION

3.1 EXAMINATION

A. Section 01 30 00 - Administrative Requirements: Coordination and project conditions.

B. Verify excavations are to required grade, dry, and not over-excavated.

3.2 PREPARATION

A. Ream pipe and tube ends. Remove burrs.

B. Remove scale and dirt, on inside and outside, before assembly.

3.3 INSTALLATION - METERS

A. Install positive displacement meters in accordance with AWWA M6, with isolating valves on inlet and outlet.

3.4 INSTALLATION - THERMOMETERS AND GAGES

A. Install one pressure gage for each pump, locate taps before strainers and on suction and discharge of pump; pipe to gage.

B. Install gage taps in piping.

C. Install pressure gages with pulsation dampers. Provide needle valve or ball valve to isolate each gage.

D. Provide instruments with scale ranges selected according to service with largest appropriate scale.

E. Install gages and thermometers in locations where they are easily read from normal operating level. Install vertical to 45 degrees off vertical.

F. Adjust gages and thermometers to final angle, clean windows and lenses, and calibrate to zero.

3.5 INSTALLATION - HANGERS AND SUPPORTS

A. Refer to Section 22 05 29.

3.6 INSTALLATION - BURIED PIPING SYSTEMS

A. Verify connection to existing piping system size, location, and invert are as indicated on Drawings.

B. Establish elevations of buried piping with not less than 1 ft of cover.

C. Establish minimum separation of 12 from other services piping in accordance with code.

D. Remove scale and dirt on inside of piping before assembly.

E. Excavate pipe trench in accordance with Division 31.

F. Install pipe to elevation as indicated on Drawings.

G. Place bedding material at trench bottom to provide uniform bedding for piping, level bedding materials in one continuous layer not exceeding 4 inches depth; compact to 95 percent maximum density.

H. Install pipe on prepared bedding.

I. Route pipe in straight line.

J. Install pipe to allow for expansion and contraction without stressing pipe or joints.

K. Install shutoff valves at locations indicated on Drawings in accordance with this Section.

L. Install plastic ribbon tape continuous over top of pipe. above pipe line; coordinate with Section. Refer to Section 22 05 53.

M. Pipe Cover and Backfilling:

1. Backfill trench in accordance with Division 31.
2. Maintain optimum moisture content of fill material to attain required compaction density.
3. After hydrostatic test, evenly backfill entire trench width by hand placing backfill material and hand tamping in 4 inches compacted layers to 6 inches minimum cover over top of jacket. Compact to 95 percent maximum density.
4. Evenly and continuously backfill remaining trench depth in uniform layers with backfill material.
5. Do not use wheeled or tracked vehicles for tamping.

3.7 INSTALLATION - ABOVE GROUND PIPING

A. Install non-conducting dielectric connections wherever jointing dissimilar metals.

B. Route piping in orderly manner and maintain gradient. Route parallel and perpendicular to walls.

C. Install piping to maintain headroom without interfering with use of space or taking more space than necessary.

D. Group piping whenever practical at common elevations.

E. Slope piping and arrange systems to drain at low points.

F. Provide clearance in hangers and from structure and other equipment for installation of insulation and access to valves and fittings. Refer to Section 22 07 00.

G. Provide access where valves and fittings are not accessible. Coordinate size and location of access doors with Section 08 31 13.

H. Where pipe support members are welded to structural building framing, scrape, brush clean, and apply one coat of zinc rich primer to welding.

I. Provide support for utility meters in accordance with requirements of utility companies.

J. Install domestic water piping in accordance with ASME B31.9.

K. Sleeve pipes passing through partitions, walls and floors. Refer to Section 22 05 29.

L. Install firestopping at fire rated construction perimeters and openings containing penetrating sleeves and piping. Refer to Section 22 05 29.

M. Install unions downstream of valves and at equipment or apparatus connections.

N. Install valves with stems upright or horizontal, not inverted.

O. Install brass male adapters each side of valves in copper piped system. Solder adapters to pipe.

P. Install ball or butterfly valves for shut-off and to isolate equipment, part of systems, or vertical risers.

Q. Install ball or butterfly valves for throttling, bypass, or manual flow control services.

R. Provide lug end butterfly valves adjacent to equipment when functioning to isolate equipment.

S. Provide spring loaded check valves on discharge of water pumps.

T. Provide flow controls in water circulating systems as indicated on Drawings.

U. Install potable water protection devices on plumbing lines where contamination of domestic water may occur; on boiler feed water lines, janitor rooms, fire sprinkler systems, premise isolation, irrigation systems, flush valves, interior and exterior hose bibs.

V. Pipe relief from valves, back-flow preventers and drains to nearest floor drain.

W. Test backflow preventers in accordance with ASSE 5013.

X. Install water hammer arrestors complete with accessible isolation valve on hot and cold water supply piping to water closets, sinks, urinals, washing machine, dishwashers, hose bibbs, showers, tubs, and other fixtures with quick cksing valves. Place within 6 feet of fixture. Provide with access panel if required by Local Code.

3.8 INSTALLATION - PUMPS

A. Provide pumps to operate at specified system fluid temperatures without vapor binding and cavitation, are non-overloading in parallel or individual operation, and operate within 25 percent of midpoint of published maximum efficiency curve.

B. Install long radius reducing elbows or reducers between pump and piping. Support piping adjacent to pump so no weight is carried on pump casings. For close coupled or base mounted pumps, install supports under elbows on pump suction and discharge line sizes 4 inches and over.

C. Install pumps on vibration isolators. Refer to Section 21 05 48.

D. Install flexible connectors at or near pumps where piping configuration does not absorb vibration. Refer to Section 23 21 16.

E. Provide line sized shut-off valve and pump suction fitting on pump suction, and line sized combination pump discharge valve on pump discharge. Refer to Section 23 21 16.

F. Decrease from line size with long radius reducing elbows or reducers. Support piping adjacent to pump so no weight is carried on pump casings. Provide supports under elbows on pump suction and discharge line sizes 4 inches and larger.

G. Provide air cock and drain connection on horizontal pump casings.

H. Check, align, and certify alignment of base mounted pumps prior to start-up.

I. Lubricate pumps before start-up.

3.9 INSTALLATION TANKS

A. Install Work in accordance with State of California standards.

B. Provide supports, independent of building structural framing members.

C. Clean and flush installation. Seal until pipe connections are made.

D. Install the following accessories on domestic water piping connections:

1. On inlet: Thermometer check valve and shut off valve.
2. On outlet: Thermometer and shut off valve.
3. Install relief valve piping to nearest approved receptor.

3.10 INSTALLATION - SERVICE CONNECTIONS

A. Provide new water service complete with approved reduced pressure back-flow preventer and water meter with by-pass valves pressure reducing valve, and strainer.

B. Provide sleeve in wall for service main and support at wall with reinforced-concrete bridge. Caulk enlarged sleeve and make watertight with pliable material. Anchor service main inside to concrete wall.

C. Provide 18 gage galvanized sheet metal sleeve around service main to 6 inch above floor and 6 feet minimum below grade. Size for minimum of 2 inches of loose batt insulation stuffing.

3.11 FIELD QUALITY CONTROL

A. Section 01 40 00 - Quality Requirements or 017000 - Execution and Closeout Requirements: Field inspecting, testing, adjusting, and balancing.

B. Test domestic water piping system in accordance with applicable code.

3.12 CLEANING

A. Section 01 70 00 - Execution and Closeout Requirements: Requirements for cleaning.

B. Disinfect water distribution system in accordance with Section 33 13 00.

C. Prior to starting work, verify system is complete, flushed and clean.

D. Verify pH of water to be treated is between 7.4 and 7.6 by adding alkali (caustic soda or soda ash) or acid (hydrochloric).

E. Inject disinfectant, free chlorine in liquid, powder and tablet or gas form, throughout system to obtain residual from 50 to 80 mg/L.

F. Bleed water from outlets to obtain distribution and test for disinfectant residual at minimum 15 percent of outlets.

G. Maintain disinfectant in system for 24 hours.

H. When final disinfectant residual tests less than 25 mg/L, repeat treatment.

I. Flush disinfectant from system until residual concentration is equal to incoming water or 1.0 mg/L.

J. Take samples no sooner than 24 hours after flushing, from percent of outlets and from water entry, and analyze in accordance with AWWA C651.

END OF SECTION

SECTION 22 13 00

FACILITY SANITARY SEWERAGE

PART 1 - GENERAL

1.1 SUMMARY

A. Section Includes:

1. Sanitary sewer piping buried within 5 feet of building.
2. Sanitary sewer and vent piping above grade.
3. Condensate piping.
4. Pipe hangers and supports.
5. Floor drains.
6. Floor sinks.
7. Indirect Roof Receptors
8. Cleanouts.
9. Bedding and cover materials.

B. Related Sections:

1. Section 03 30 00 - Cast-In-Place Concrete: Execution requirements for placement of concrete specified by this section.
2. Section 07 84 00 - Firestopping: Product requirements for firestopping for placement by this section.
3. Section 08 31 13 - Access Doors and Frames: Product requirements for access doors for placement by this section.
4. Section 09 90 00 - Painting and Coating: Product and execution requirements for painting specified by this section.
5. Section 22 05 13 - Common Motor Requirements for Plumbing Equipment: Product requirements for motors for placement by this section.
6. Section 22 05 16 - Expansion Fittings and Loops for Plumbing Piping: Execution requirements for pipe expansion devices for placement by this section.
7. Section 22 05 29 - Hangers and Supports for Plumbing Piping and Equipment: Product requirements for pipe hangers and supports and firestopping for placement by this section.
8. Section 22 05 48 - Vibration and Seismic Controls for Plumbing Piping and Equipment: Product requirements for vibration isolators for placement by this section.
9. Section 22 05 53 - Identification for Plumbing Piping and Equipment: Product requirements for pipe identification for placement by this section.
10. Section 22 07 00 - Plumbing Insulation: Product and execution requirements for pipe insulation.
11. Section 26 05 03 - Equipment Wiring Connections: Execution requirements for electric connections to equipment specified by this section.
12. Section 31 05 13 - Soils for Earthwork: Soils for backfill in trenches.
13. Section 31 05 16 - Aggregates for Earthwork: Aggregate for backfill in trenches.
14. Section 31 23 16 - Excavation: Product and execution requirements for excavation and backfill required by this section.

15. Section 31 23 16.13 - Trenching: Execution requirements for trenching required by this section.
16. Section 31 23 23 - Fill: Requirements for backfill to be placed by this section.
17. Section 33 41 00 - Storm Utility Drainage Piping: Catch basins and manholes.

1.2 REFERENCES

A. American Society of Mechanical Engineers:

1. ASME A112.21.1 - Floor Drains.
2. ASME B16.1 - Cast Iron Pipe Flanges and Flanged Fittings.
3. ASME B16.3 - Malleable Iron Threaded Fittings.
4. ASME B16.4 - Gray Iron Threaded Fittings.
5. ASME B16.23 - Cast Copper Alloy Solder Joint Drainage Fittings (DWV).
6. ASME B16.29 - Wrought Copper and Wrought Copper Alloy Solder Joint Drainage Fittings - DWV.
7. ASME B31.9 - Building Services Piping.

B. ASTM International:

1. ASTM A74 - Standard Specification for Cast Iron Soil Pipe and Fittings.
2. ASTM A536 - Standard Specification for Ductile Iron Castings.
3. ASTM B88 - Standard Specification for Seamless Copper Water Tube.
4. ASTM C564 - Standard Specification for Rubber Gaskets for Cast Iron Soil Pipe and Fittings.

C. Cast Iron Soil Pipe Institute:

1. CISPI 301 - Standard Specification for Hubless Cast Iron Soil Pipe and Fittings for Sanitary and Storm Drain, Waste, and Vent Piping Applications.
2. CISPI 310 - Specification for Coupling for Use in Connection with Hubless Cast Iron Soil Pipe and Fittings for Sanitary and Storm Drain, Waste, and Vent Piping Applications.

1.3 SUBMITTALS

A. Section 01 33 00 - Submittal Procedures: Submittal procedures.

B. Shop Drawings: Indicate dimensions, weights, and placement of openings and holes for sewage-ejectors, and manholes.

C. Product Data:

1. Piping: Submit data on pipe materials, fittings, and accessories. Submit manufacturers catalog information.
2. Valves: Submit manufacturers catalog information with valve data and ratings for each service.
3. Hangers and Supports: Submit manufacturers catalog information including load capacity.
4. Sanitary Drainage Specialties: Submit manufacturers catalog information, component sizes, rough-in requirements, service sizes, and finishes.

5. Pumps: Submit pump type, capacity, certified pump curves showing pump performance characteristics with pump and system operating point plotted. Include NPSH curve when applicable. Include electrical characteristics and connection requirements.

D. Manufacturer's Installation Instructions: Submit installation instructions for material and equipment.

E. Manufacturer's Certificate: Certify products meet or exceed specified requirements.

1.4 CLOSEOUT SUBMITTALS

A. Section 01 70 00 - Execution and Closeout Requirements: Closeout procedures.

B. Project Record Documents: Record actual locations of equipment and clean-outs.

C. Operation and Maintenance Data: Submit frequency of treatment required for interceptors. Include, spare parts lists, exploded assembly views for pumps and equipment.

1.5 QUALITY ASSURANCE

A. Perform Work in accordance with State of California standards.

B. Maintain one copy of each document on site.

1.6 QUALIFICATIONS

A. Manufacturer: Company specializing in manufacturing products specified in this section with minimum three years experience.

B. Installer: Company specializing in performing Work of this section with minimum three years experience.

1.7 PRE-INSTALLATION MEETINGS

A. Section 01 30 00 - Administrative Requirements: Pre-installation meeting.

B. Convene minimum one week prior to commencing work of this section.

1.8 DELIVERY, STORAGE, AND HANDLING

A. Section 01 60 00 - Product Requirements: Product storage and handling requirements.

B. Protect piping systems from entry of foreign materials by temporary covers, completing sections of the Work, and isolating parts of completed system.

1.9 ENVIRONMENTAL REQUIREMENTS

A. Section 01 60 00 - Product Requirements.

B. Do not install underground piping when bedding is wet or frozen.

1.10 FIELD MEASUREMENTS

A. Verify field measurements prior to fabrication.

1.11 WARRANTY

A. Section 01 70 00 - Execution and Closeout Requirements: Product warranties and product bonds.

1.12 EXTRA MATERIALS

A. Section 01 70 00 - Execution and Closeout Requirements: Spare parts and maintenance products.

PART 2 - PRODUCTS

2.1 SANITARY SEWER PIPING, BURIED WITHIN 5 FEET OF BUILDING

A. Manufacturer:

1. Husky SD4000.
2. Clamp-All 125.
3. MG Coupling.
4. Charlotte Pipe.
5. AB & I Pipe,
6. Tyler Pipe.

B. Cast Iron Soil Pipe: CISPI 301 and A888. hubless, service weight.

1. Fittings: Cast iron, CISPI 301 and ASTM A888.
2. Joints: ASTM C1540, with C564 gaskets, heavy duty 304 stainless steel assemblies.

2.2 SANITARY SEWER AND VENT PIPING, ABOVE GRADE

A. Manufacturer:

1. Husky SD4000.
2. Clamp-All 125.
3. MG Coupling.
4. Charlotte Pipe.
5. AB & I Pipe,
6. Tyler Pipe.

B. Cast Iron Soil Pipe: CISPI 301 and A888. hubless, service weight.

1. Fittings: Cast iron, CISPI 301 and ASTM A888.
2. Joints: ASTM X1540, with C564 neoprene gaskets and 304 stainless steel clamp-and-shield assemblies.

2.3 CONDENSATE PIPING

A. ASTM B88, Type M with ASTM B16.23 vast bronze or ASTM B16.29 wrought copper fittings and ASTM B32 alloy grade SB5 tin antimony or alloy grade SN95 tin-silver lead-free solder..

2.4 PIPE HANGERS AND SUPPORTS

A. Refer to Section 22 05 29.

2.5 FLOOR DRAINS (SEE SCHEDULE FOR MAKE & MODEL)

A. Manufacturers:

1. Jay R. Smith Mfg Co; a division of Morris Group International.
2. Josam Company.
3. WATTS.
4. Zurn Industries, LLC.

B. Substitutions: Section 01 60 00 - Product Requirements.

C. Floor Drain: ASME A112.21.1; lacquered cast iron two piece body with double drainage flange, weep holes, reversible clamping collar, and round, adjustable nickel-bronze strainer.

D. Shower Drain: ASME A112.21.1; lacquered cast iron two piece body with double drainage flange, weep holes, reversible clamping collar, and round, adjustable round nickel-bronze strainer with removable perforated sediment bucket.

2.6 FLOOR SINKS (SEE SCHEDULE FOR MAKE & MODEL)

A. Manufacturers:

1. Jay R. Smith Mfg Co; a division of Morris Group International.
2. WATTS.
3. Zurn Industries, LLC.

B. Substitutions: Section 01 60 00 - Product Requirements.

C. Floor Sink: Square lacquered cast iron body with integral seepage pan, epoxy coated interior, aluminum dome strainer, clamp collar, sediment bucket, epoxy coated, nickel bronze frame and see drawings for grate.

2.7 INDIRECT ROOF RECEPTOR (SEE SCHEDULE FOR MAKE & MODEL)

A. Manufacturers:

1. Jay R. Smith Mfg Co; a division of Morris Group International.
2. WATTS.
3. Zurn Industries, LLC.

B. Substitutions: Section 01 60 00 - Product Requirements.

C. 12-inch diameter all galvanized assembly with hubless cast iron body with bottom outlet, flashing device, 2-1/2 inch high water dam, underdeck clamp, sump receiver and dome strainer with vandal-proof mounting cast iron “P-Trap”.

2.8 CLEANOUTS

A. Manufacturers:

1. Jay R Smith Mfg. Co; a division of Morris Group International.
2. Josam Company.
3. Zurn Industries, LLC.

B. Substitutions: Section 01 60 00 - Product Requirements.

C. Exterior Surfaced Areas: Round cast nickel bronze access frame and non-skid cover.

D. Exterior Unsurfaced Areas: Line type with lacquered cast iron body and round epoxy coated cover wit gasket.

E. Interior Finished Floor Areas: Lacquered cast iron body with anchor flange, reversible clamping collar, threaded top assembly, and round scored cover with gasket in service areas and round depressed cover with gasket to accept floor finish in finished floor areas.

F. Interior Finished Wall Areas: Line type with lacquered cast iron body and round epoxy coated cover with gasket, and round stainless steel access cover secured with machine screw.

G. Interior Unfinished Accessible Areas: Calked or threaded type. Provide bolted stack cleanouts on vertical rainwater leaders.

2.9 BEDDING AND COVER MATERIALS

A. Bedding: Fill Type as specified in Division 31.

B. Cover: Fill Type, as specified in Division 31.

C. Soil Backfill from Above Pipe to Finish Grade: Soil Type, as specified in Division 31.

PART 3 - EXECUTION

3.1 EXAMINATION

A. Section 01 30 00 - Administrative Requirements: Coordination and project conditions.

B. Verify excavations are to required grade, dry, and not over-excavated.

3.2 PREPARATION

A. Ream pipe and tube ends. Remove burrs.

B. Remove scale and dirt, on inside and outside, before assembly.

C. Prepare piping connections to equipment with flanges or unions.

D. Keep open ends of pipe free from scale and dirt. Protect open ends with temporary plugs or caps.

3.3 INSTALLATION - HANGERS AND SUPPORTS

A. Refer to Section 22 05 29.

3.4 INSTALLATION - BURIED PIPING SYSTEMS

A. Verify connection to existing piping system size, location, and invert are as indicated on Drawings.

B. Establish elevations of buried piping with not less than 3 ft of cover.

C. Establish minimum separation of 12 from other services piping in accordance with code.

D. Remove scale and dirt on inside of piping before assembly.

E. Excavate pipe trench in accordance with Division 31.

F. Install pipe to elevation as indicated on Drawings.

G. Place bedding material at trench bottom to provide uniform bedding for piping, level bedding materials in one continuous layer not exceeding 4 inches compacted depth; compact to 95 percent maximum density.

H. Install pipe on prepared bedding.

I. Route pipe in straight line.

J. Install plastic ribbon tape continuous buried 6 inches below finish grade, above pipe line; coordinate with Division 31. Refer to Section 22 05 53.

K. Pipe Cover and Backfilling:

1. Backfill trench in accordance with Division 31.
2. Maintain optimum moisture content of fill material to attain required compaction density.
3. After hydrostatic test, evenly backfill entire trench width by hand placing backfill material and hand tamping in 4 inches compacted layers to 6 inches minimum cover over top of jacket. Compact to 95 percent maximum density.
4. Evenly and continuously backfill remaining trench depth in uniform layers with backfill material.
5. Do not use wheeled or tracked vehicles for tamping.

3.5 INSTALLATION - ABOVE GROUND PIPING

A. Establish invert elevations, slopes for drainage to1/8 inch per foot minimum. Maintain gradients.

B. Extend cleanouts to finished floor or wall surface. Lubricate threaded cleanout plugs with mixture of graphite and linseed oil. Provide clearances at cleanout for snaking drainage system.

C. Encase exterior cleanouts in concrete flush with grade.

D. Install floor cleanouts at elevation to accommodate finished floor.

E. Provide non-conducting dielectric connections wherever jointing dissimilar metals.

F. Route piping in orderly manner and maintain gradient. Route parallel and perpendicular to walls.

G. Install piping to maintain headroom. Do not spread piping, conserve space.

H. Group piping whenever practical at common elevations.

I. Provide access where valves and fittings are not accessible. Coordinate size and location of access doors with Section 08 31 13.

J. Install piping penetrating roofed areas to maintain integrity of roof assembly.

K. Where pipe support members are welded to structural building framing, scrape, brush clean, and apply one coat of zinc rich primer to welding.

L. Prepare exposed, unfinished pipe, fittings, supports, and accessories ready for finish painting. Refer to Section 09 90 00.

M. Install bell and spigot pipe with bell end upstream.

N. Sleeve pipes passing through partitions, walls and floors.

O. Install firestopping at fire rated construction perimeters and openings containing penetrating sleeves and piping. Refer to Section 22 05 29.

P. Support cast iron drainage piping at every joint.

3.6 FIELD QUALITY CONTROL

A. Section 01 40 00 - Quality Requirements or 017000 - Execution and Closeout Requirements: Field inspecting, testing, adjusting, and balancing.

B. Test sanitary waste and vent piping system in accordance with applicable code.

END OF SECTION

SECTION 22 14 00

FACILITY STORM DRAINAGE

PART 1 - GENERAL

1.1 SUMMARY

A. Section Includes:

1. Storm water piping buried within 5 feet of building.
2. Storm water piping above grade.
3. Pipe hangers and supports.
4. Roof and Overflow drains.
5. Downspout nozzles.
6. Cleanouts.
7. Bedding and cover materials.

B. Related Sections:

1. Section 03 30 00 - Cast-In-Place Concrete: Execution requirements for placement of concrete specified by this section.
2. Section 07 84 00 - Firestopping: Product requirements for firestopping for placement by this section.
3. Section 08 31 13 - Access Doors and Frames: Product requirements for access doors for placement by this section.
4. Section 09 90 00 - Painting and Coating: Product and execution requirements for painting specified by this section.
5. Section 22 05 13 - Common Motor Requirements for Plumbing Equipment: Product requirements for motors for placement by this section.
6. Section 22 05 16 - Expansion Fittings and Loops for Plumbing Piping: Execution requirements for pipe expansion devices for placement by this section.
7. Section 22 05 29 - Hangers and Supports for Plumbing Piping and Equipment: Product requirements for pipe hangers and supports and firestopping for placement by this section.
8. Section 22 05 48 - Vibration and Seismic Controls for Plumbing Piping and Equipment: Product requirements for vibration isolators for placement by this section.
9. Section 22 05 53 - Identification for Plumbing Piping and Equipment: Product requirements for pipe identification for placement by this section.
10. Section 22 07 00 - Plumbing Insulation: Product and execution requirements for pipe insulation.
11. Section 26 05 03 - Equipment Wiring Connections: Execution requirements for electric connections to equipment specified by this section.
12. Section 31 05 13 - Soils for Earthwork: Soils for backfill in trenches.
13. Section 31 05 16 - Aggregates for Earthwork: Aggregate for backfill in trenches.
14. Section 31 23 16 - Excavation: Product and execution requirements for excavation and backfill required by this section.
15. Section 31 23 16.13 - Trenching: Execution requirements for trenching required by this section.

16. Section 31 23 23 - Fill: Requirements for backfill to be placed by this section.
17. Section 33 41 00 - Storm Utility Drainage Piping: Catch basins and manholes.

1.2 REFERENCES

A. American Society of Mechanical Engineers:

1. ASME A112.21.2M - Roof Drains.
2. ASME B16.23 - Cast Copper Alloy Solder Joint Drainage Fittings (DWV).
3. ASME B31.9 - Building Services Piping.

B. ASTM International:

1. ASTM A74 - Standard Specification for Cast Iron Soil Pipe and Fittings.
2. ASTM C564 - Standard Specification for Rubber Gaskets for Cast Iron Soil Pipe and Fittings.

C. Cast Iron Soil Pipe Institute:

1. CISPI 301 - Standard Specification for Hubless Cast Iron Soil Pipe and Fittings for Sanitary and Storm Drain, Waste, and Vent Piping Applications.
2. CISPI 310 - Specification for Coupling for Use in Connection with Hubless Cast Iron Soil Pipe and Fittings for Sanitary and Storm Drain, Waste, and Vent Piping Applications.

1.3 SUBMITTALS

A. Section 01 33 00 - Submittal Procedures: Submittal procedures.

B. Shop Drawings: Indicate dimensions, weights, and placement of openings and holes for sump-pumps, catch basins and manholes.

C. Product Data:

1. Piping: Submit data on pipe materials, fittings, and accessories. Submit manufacturers catalog information.
2. Valves: Submit manufacturers catalog information with valve data and ratings for each service.
3. Hangers and Supports: Submit manufacturers catalog information including load capacity.
4. Storm Drainage Specialties: Submit manufacturers catalog information, component sizes, rough-in requirements, service sizes, and finishes.

D. Manufacturer's Installation Instructions: Submit installation instructions for material and equipment.

E. Manufacturer's Certificate: Certify products meet or exceed specified requirements.

1.4 CLOSEOUT SUBMITTALS

A. Section 01 70 00 - Execution and Closeout Requirements: Closeout procedures.

B. Project Record Documents: Record actual locations of equipment and cleanouts.

C. Operation and Maintenance Data: Submit spare parts lists, exploded assembly views for pumps and equipment.

1.5 QUALITY ASSURANCE

A. Perform Work in accordance with State of California standards.

B. Maintain one copy of each document on site.

1.6 QUALIFICATIONS

A. Manufacturer: Company specializing in manufacturing products specified in this section with minimum three years experience.

B. Installer: Company specializing in performing Work of this section with minimum three years experience.

1.7 PRE-INSTALLATION MEETINGS

A. Section 01 30 00 - Administrative Requirements: Pre-installation meeting.

B. Convene minimum one week prior to commencing work of this section.

1.8 DELIVERY, STORAGE, AND HANDLING

A. Section 01 60 00 - Product Requirements: Product storage and handling requirements.

B. Protect piping systems from entry of foreign materials by temporary covers, completing sections of the Work, and isolating parts of completed system.

1.9 ENVIRONMENTAL REQUIREMENTS

A. Section 01 60 00 - Product Requirements.

B. Do not install underground piping when bedding is wet or frozen.

1.10 FIELD MEASUREMENTS

A. Verify field measurements prior to fabrication.

1.11 WARRANTY

A. Section 01 70 00 - Execution and Closeout Requirements: Product warranties and product bonds.

1.12 EXTRA MATERIALS

A. Section 01 70 00 - Execution and Closeout Requirements: Spare parts and maintenance products.

PART 2 - PRODUCTS

2.1 STORM WATER PIPING, BURIED WITHIN 5 FEET OF BUILDING

A. Manufacturer:

1. Husky SD4000.
2. Clamp-All 125.
3. MG Coupling.
4. Charlotte Pipe.
5. AB & I Pipe,
6. Tyler Pipe.

B. Cast Iron Soil Pipe: CISPI 301 and A888. hubless, service weight.

1. Fittings: Cast iron, CISPI 301 and ASTM A888.
2. Joints: ASTM C1540, with C564 gaskets, heavy duty 304 stainless steel assemblies.

2.2 STORM WATER PIPING, ABOVE GRADE

A. Manufacturer:

1. Husky SD4000.
2. Clamp-All 125.
3. MG Coupling.
4. Charlotte Pipe.
5. AB & I Pipe,
6. Tyler Pipe.

B. Cast Iron Soil Pipe: CISPI 301 and A888. hubless, service weight.

1. Fittings: Cast iron, CISPI 301 and ASTM A888.
2. Joints: ASTM X1540, with C564 neoprene gaskets and 304 stainless steel clamp-and-shield assemblies.

2.3 PIPE HANGERS AND SUPPORTS

A. Refer to Section 22 05 29

2.4 ROOF AND OVERFLOW DRAINS

A. Manufacturers:

1. Jay R. Smith Mfg Co; a division of Morris Group International.
2. Josam Company.
3. Sioux Chief Manufacturing Company, Inc.
4. WATTS.
5. Zurn Industries, LLC.

B. Substitutions: Section 01 60 00 - Product Requirements.

C. Roof Drain:

1. Assembly: ASME A112.21.2M.
2. Body: Lacquered cast iron with sump.
3. Strainer: Removable cast iron dome with vandal proof screws.
4. Accessories: Coordinate with roofing type:

a. Membrane flange and membrane clamp with integral gravel stop.
b. Adjustable under deck clamp.
c. Roof sump receiver.
d. Waterproofing flange.
e. Controlled flow weir.
f. Leveling frame.
g. Adjustable extension sleeve for roof insulation.
h. Perforated or slotted ballast guard extension for inverted roof.
i. Perforated stainless steel ballast guard extension.

D. Overflow Drain:

1. Assembly: ASME A112.21.2M.
2. Body: Lacquered cast iron with sump.
3. Strainer: Removable cast iron dome with vandal proof screws.
4. Pipe extended to 2 inches above flood elevation.
5. Accessories: Coordinate with roofing type:

a. Membrane flange and membrane clamp with integral gravel stop.
b. Adjustable under deck clamp.
c. Roof sump receiver.
d. Waterproofing flange.
e. Controlled flow weir.
f. Leveling frame.
g. Adjustable extension sleeve for roof insulation.
h. Perforated or slotted ballast guard extension for inverted roof.
i. Perforated stainless steel ballast guard extension.

2.5 DOWNSPOUT NOZZLES

A. Manufacturers:

1. Jay R. Smith Mfg Co; a division of Morris Group International.
2. Josam Company.
3. MIFAB, Inc.
4. WATTS.
5. Zurn Industries, LLC.

B. Substitutions: Section 01 60 00 - Product Requirements.

C. Product Description: No hub outlet, opening serves as anchor. Provide birdscreen cover. Nickel bronze body and wall flange.

2.6 CLEANOUTS

A. Manufacturers:

1. J.R. Smith.
2. Josam Company.
3. Zurn Industries, LLC.

B. Substitutions: Section 01 60 00 - Product Requirements.

C. Exterior Surfaced Areas: Round cast nickel bronze access frame and non-skid cover.

D. Exterior Unsurfaced Areas: Line type with lacquered cast iron body and round epoxy coated cover with gasket.

E. Interior Finished Floor Areas: Lacquered cast iron body with anchor flange, reversible clamping collar, threaded top assembly, and round scored cover with gasket in service areas and round depressed cover with gasket to accept floor finish in finished floor areas.

F. Interior Finished Wall Areas: Line type with lacquered cast iron body and round epoxy coated cover with gasket, and round stainless steel access cover secured with machine screw.

G. Interior Unfinished Accessible Areas: Calked or threaded type. Provide bolted stack cleanouts on vertical rainwater leaders.

2.7 BEDDING AND COVER MATERIALS

A. Bedding: Fill Type as specified in Division 31.

B. Cover: Fill Type, as specified in Division 31.

C. Soil Backfill from Above Pipe to Finish Grade: Soil Type, as specified in Division 31. Subsoil with no rocks over 6 inches in diameter, frozen earth or foreign matter.

PART 3 - EXECUTION

3.1 EXAMINATION

A. Section 01 30 00 - Administrative Requirements: Coordination and project conditions.

B. Verify excavations are to required grade, dry, and not over-excavated.

3.2 PREPARATION

A. Ream pipe and tube ends. Remove burrs. Bevel plain end ferrous pipe.

B. Remove scale and dirt, on inside and outside, before assembly.

C. Prepare piping connections to equipment with flanges or unions.

D. Keep open ends of pipe free from scale and dirt. Protect open ends with temporary plugs or caps.

3.3 INSTALLATION - HANGERS AND SUPPORTS

A. Refer to Section 22 05 29.

3.4 INSTALLATION - BURIED PIPING SYSTEMS

A. Verify connection to existing piping system size, location, and invert are as indicated on Drawings.

B. Establish elevations of buried piping with not less than 1 ft of cover.

C. Establish minimum separation of 12 from other services piping according to code.

D. Excavate pipe trench according to Division 31.

E. Install pipe to elevation as indicated on Drawings.

F. Place bedding material at trench bottom to provide uniform bedding for piping, level bedding materials in one continuous layer not exceeding 4 inches compacted depth; compact to 95 percent maximum density.

G. Install pipe on prepared bedding.

H. Route pipe in straight line.

I. Install plastic ribbon tape continuous over top of pipe buried 6 inches below finish grade, above pipe line; coordinate with Division 31.

J. Pipe Cover and Backfilling:

1. Backfill trench according to Division 31.
2. Maintain optimum moisture content of fill material to attain required compaction density.
3. After hydrostatic test, evenly backfill entire trench width by hand placing backfill material and hand tamping in 4 inches compacted layers to 6 inches minimum cover over top of jacket. Compact to 95 percent maximum density.
4. Evenly and continuously backfill remaining trench depth in uniform layers with backfill material.
5. Do not use wheeled or tracked vehicles for tamping.

3.5 INSTALLATION - ABOVE GROUND PIPING

A. Establish invert elevations, slopes for drainage to 1/8 inch per foot minimum. Maintain gradients.

B. Extend cleanouts to finished floor or wall surface. Lubricate threaded cleanout plugs with mixture of graphite and linseed oil. Provide clearance at cleanout for snaking drainage system.

C. Encase exterior cleanouts in concrete flush with grade.

D. Install floor cleanouts at elevation to accommodate finished floor.

E. Install non-conducting dielectric connections wherever jointing dissimilar metals.

F. Route piping in orderly manner and maintain gradient. Route parallel and perpendicular to walls.

G. Install piping to maintain headroom. Group piping to conserve space.

H. Group piping whenever practical at common elevations.

I. Support cast iron drainage piping at every joint.

J. Provide clearance in hangers and from structure and other equipment for installation of insulation. Refer to Section 22 07 00.

K. Install piping penetrating roofed areas to maintain integrity of roof assembly.

L. Where pipe support members are welded to structural building framing, scrape, brush clean, and apply one coat of zinc rich primer to welding.

M. Prepare exposed, unfinished pipe, fittings, supports, and accessories ready for finish painting. Refer to Section 09 90 00.

N. Install bell and spigot pipe with bell end upstream.

O. Sleeve pipes passing through partitions, walls and floors. Refer to Section 22 05 29.

P. Install firestopping at fire rated construction perimeters and openings containing penetrating sleeves and piping. Refer to Section] 220529.

3.6 FIELD QUALITY CONTROL

A. Division 01 - Quality Requirements and Execution and Closeout Requirements: Field inspecting, testing, adjusting, and balancing.

B. Test storm drainage piping system according to applicable code.

END OF SECTION

SECTION 22 16 00

FACILITY NATURAL-GAS PIPING

PART 1 - GENERAL

1.1 SUMMARY

A. Section Includes:

1. Natural gas piping buried within 5 feet of building.
2. Natural gas piping above grade.
3. Unions and flanges.
4. Plug Valves.
5. Pipe hangers and supports.
6. Strainers.
7. Natural gas pressure relief valves.
8. Underground pipe markers.
9. Bedding and cover materials.

B. Related Sections:

1. Section 08 31 13 - Access Doors and Frames: Access doors for concealed valves and accessories.
2. Section 22 05 29 - Hangers and Supports for Plumbing Piping and Equipment: Product requirements for pipe hangers and supports and firestopping for placement by this section.
3. Section 22 05 53 - Identification for Plumbing Piping and Equipment: Product requirements for valve and pipe identification for placement by this section.

1.2 REFERENCES

A. American National Standards Institute:

1. ANSI Z21.15 - Manually Operated Gas Valves for Appliances, Appliance Connector Valves and Hose End Valves.

B. American Society of Mechanical Engineers:

1. ASME B16.3 - Malleable Iron Threaded Fittings.
2. ASME B16.26 - Cast Copper Alloy Fittings for Flared Copper Tubes.
3. ASME B16.33 - Manually Operated Metallic Gas Valves for Use in Gas Piping Systems Up to 125 psig (sizes 1/2 - 2).
4. ASME B31.9 - Building Services Piping.
5. ASME Section IX - Boiler and Pressure Vessel Code - Welding and Brazing Qualifications.

C. ASTM International:

1. ASTM A53/A53M - Standard Specification for Pipe, Steel, Black and Hot-Dipped, Zinc-Coated, Welded and Seamless.

2. ASTM A234/A234M - Standard Specification for Piping Fittings of Wrought Carbon Steel and Alloy Steel for Moderate and High Temperature Service.
3. ASTM F1973 – Factory Assembled Anodeless Risers and Transition Fittings in Polyethylene (PE) and Polyamide 11 (PA11) and Polyamide 12 (PA12) Fuel Gas Distribution Systems.

D. American Welding Society:

1. AWS D1.1 - Structural Welding Code - Steel.

E. American Water Works Association:

1. AWWA C105 - American National Standard for Polyethylene Encasement for Ductile-Iron Pipe Systems.

F. National Fire Protection Association:

1. NFPA 54 - National Fuel Gas Code.

1.3 SYSTEM DESCRIPTION

A. Where more than one piping system material is specified, provide compatible system components and joints. Use non-conducting dielectric connections when joining dissimilar metals in systems.

B. Provide flanges, unions, or couplings at locations requiring servicing. Use unions, flanges, or couplings downstream of valves and at equipment connections. Do not use direct welded or threaded connections to valves, equipment.

C. Provide pipe hangers and supports in accordance with ASME B31.9.

D. Use plug valves for shut-off and to isolate equipment, part of systems, or vertical risers.

1.4 SUBMITTALS

A. Section 01 33 00 - Submittal Procedures: Submittal procedures.

B. Product Data:

1. Piping: Submit data on pipe materials, fittings, and accessories. Submit manufacturers catalog information.
2. Valves: Submit manufacturers catalog information with valve data and ratings for each service.
3. Hangers and Supports: Submit manufacturers catalog information including load capacity.
4. Piping Specialties: Submit manufacturers catalog information including capacity, rough-in requirements, and service sizes for the following:

a. Strainers.
b. Natural gas pressure regulators.
c. Natural gas pressure relief valves.

C. Design Data: Indicate pipe size. Indicate load carrying capacity of trapeze, multiple pipe, and riser support hangers.

D. Test Reports: Indicate results of piping system pressure test.

E. Manufacturer's Certificate: Certify Products meet or exceed specified requirements.

F. Welders Certificates: Certify welders employed on the Work, verifying AWS qualification within previous 12 months.

1.5 CLOSEOUT SUBMITTALS

A. Section 01 70 00 - Execution and Closeout Requirements: Closeout procedures.

B. Project Record Documents: Record actual locations of valves, piping system, and system components.

C. Operation and Maintenance Data: Submit for valves and gas pressure regulators installation instructions, spare parts lists.

1.6 QUALITY ASSURANCE

A. Perform natural gas Work in accordance with NFPA 54.

B. Perform work in accordance with applicable code and local gas company requirements.

C. Perform Work in accordance with ASME B31.9 code for installation of piping systems and ASME Section IX for welding materials and procedures.

D. Perform Work in accordance with applicable code authority having jurisdiction for welding hanger and support attachments to building structure.

E. Furnish shutoff valves complying with ASME B16.33 or ANSI Z21.15.

F. Maintain one copy of each document on site.

1.7 QUALIFICATIONS

A. Manufacturer: Company specializing in manufacturing products specified in this section with minimum three years' experience.

B. Installer: Company specializing in performing Work of this section with minimum three years' experience.

1.8 PRE-INSTALLATION MEETINGS

A. Section 01 30 00 - Administrative Requirements: Pre-installation meeting.

B. Convene minimum one week prior to commencing work of this section.

1.9 DELIVERY, STORAGE, AND HANDLING

A. Section 01 60 00 - Product Requirements: Product storage and handling requirements.

B. Accept valves on site in shipping containers with labeling in place. Inspect for damage.

C. Protect piping and fittings from soil and debris with temporary end caps and closures. Maintain in place until installation. Furnish temporary protective coating on cast iron and steel valves.

1.10 ENVIRONMENTAL REQUIREMENTS

A. Section 01 60 00 - Product Requirements.

B. Do not install underground piping when bedding is wet or frozen.

1.11 FIELD MEASUREMENTS

A. Verify field measurements prior to fabrication.

1.12 COORDINATION

A. Section 01 30 00 - Administrative Requirements: Requirements for coordination.

B. Coordinate trenching, excavating, bedding, and backfilling of buried piping systems with requirements of Division 31.

1.13 WARRANTY

A. Section 01 70 00 - Execution and Closeout Requirements: Product warranties and product bonds.

B. Furnish five-year manufacturer's warranty for valves excluding packing.

1.14 EXTRA MATERIALS

A. Section 01 70 00 - Execution and Closeout Requirements: Spare parts and maintenance products.

B. Furnish two packing kits for each type and size valve.

PART 2 - PRODUCTS

2.1 NATURAL GAS PIPING, BURIED WITHIN 5 FEET OF BUILDING

A. Medium density polyethylene, heat fusion pipe and fittings, PE2406, in accordance with ASTM D2513, D3350, D2683, D3261 and the Department of Transportation (DOT) Title 49 Part 192 Provide No 12 insulated copper trace wire and approved transitional fittings from thermoplastic to steel pipe.

1. Provide factory assembled anodeless transition gas riser; ASTM F1973-2008.

2.2 NATURAL GAS PIPING, ABOVE GRADE

A. Steel Pipe: ASTM A53/A53M Schedule 40 black.

1. Fittings: ASME B16.3, malleable iron, or ASTM A234/A234M forged steel welding type.
2. Joints: Threaded for pipe 2 inch and smaller; welded for pipe 2-1/2 inches and larger.

2.3 UNIONS AND FLANGES

A. Unions for Pipe 2 inches and Smaller:

1. Ferrous Piping: Class 150, malleable iron, threaded.

B. Flanges for Pipe 2-1/2 inches and Larger:

1. Ferrous Piping: Class 150, forged steel, slip-on flanges.
2. Gaskets: 1/16 inch thick preformed neoprene gaskets.

2.4 PLUG VALVES

A. Manufacturers:

1. DeZURIK.
2. Homestead Valve, a division of Olson Technologies, Inc.
3. Milwaukee Valve Company.

B. Substitutions: Section 01 60 00 - Product Requirements.

C. 2 inches and Smaller: MSS SP 78, Class 150, construction, round port, full pipe area, pressure lubricated, teflon packing, threaded ends. Furnish one plug valve wrench for every ten plug-valves with minimum of one wrench.

D. 2-1/2 inches and Larger: MSS SP 78, Class 150, semi-steel construction, round port, full pipe area, pressure lubricated, teflon packing, flanged ends. Furnish wrench-operated.

2.5 PIPE HANGERS AND SUPPORTS

A. Refer to Section 22 05 29.

2.6 STRAINERS

A. Manufacturers:

1. Flomatic Corporation.
2. Hayward Flow Control.
3. Keckley Company.
4. NIBCO INC.

5. Zurn Industries, LLC.

B. Substitutions: Section 01 60 00 - Product Requirements.

C. 2 inch and Smaller: Screwed brass or iron body for 175 psig working pressure, Y pattern with 1/32 inch stainless steel perforated screen.

D. 2-1/2 inches to 4 inches: Flanged iron body for 175 psig working pressure, Y pattern with 3/64 inch stainless steel perforated screen.

E. 5 inches and Larger: Flanged iron body for 175 psig working pressure, basket pattern with 1/8 inch stainless steel perforated screen.

2.7 NATURAL GAS PRESSURE RELIEF VALVES

A. Manufacturers:

1. Fischer; Emerson Electric Co., Automation Solutions.
2. Rockwell Automation, Inc.
3. Rosemount Inc.; Emerson Electric Company.

B. Substitutions: Section 01 60 00 - Product Requirements.

C. Product Description: Spring loaded type relief valve.

1. Body: Aluminum.
2. Diaphragm: Nitrile.
3. Orifice:
4. Maximum operating temperature: 150 degrees F.
5. Inlet Connections: Threaded.
6. Outlet or Vent Connection: Same size as inlet connection.

2.8 UNDERGROUND PIPE MARKERS

A. Manufacturers:

1. Kolbi Pipe Marker Co.
2. Seton Identification Products; a Brady Corporation company.

B. Substitutions: Section 01 60 00 - Product Requirements.

C. Plastic Ribbon Tape: Bright colored, continuously printed, minimum 6 inches wide by 4 mil thick, manufactured for direct burial service.

D. Trace Wire: Magnetic detectable conductor, brightly colored plastic covering, imprinted with "Natural Gas Service" in large letters.

2.9 BEDDING AND COVER MATERIALS

A. Bedding: Fill Type as specified in Division 31.

B. Cover: Fill Type as specified in Division 31.

C. Soil Backfill from Above Pipe to Finish Grade: Soil Type, as specified in Division 31. Subsoil with no rocks over 6 inches in diameter, frozen earth or foreign matter.

PART 3 - EXECUTION

3.1 EXAMINATION

A. Section 01 30 00 - Administrative Requirements: Coordination and project conditions.

B. Verify excavations are to required grade, dry, and not over-excavated.

3.2 PREPARATION

A. Ream pipe and tube ends. Remove burrs. Bevel plain end ferrous pipe.

B. Remove scale and dirt, on inside and outside, before assembly.

C. Prepare piping connections to equipment with flanges or unions.

3.3 INSTALLATION - PIPE HANGERS AND SUPPORTS

A. Install pipe hangers and supports in accordance with Section 22 05 29.

3.4 INSTALLATION - BURIED PIPING SYSTEMS

A. Install natural gas piping in accordance with NFPA 54.

B. Verify connection to existing piping system size, location, and invert are as indicated on Drawings.

C. Establish elevations of buried piping with not less than 1.5 ft of cover.

D. Establish minimum separation of 12 inches from other services piping in accordance with code.

E. Remove scale and dirt on inside of piping before assembly.

F. Excavate pipe trench in accordance with Division 31.

G. Place bedding material at trench bottom to provide uniform bedding for piping, level bedding materials in one continuous layer not exceeding 4 inches compacted depth; compact to 95 percent maximum density.

H. Install pipe on prepared bedding.

I. Route pipe in straight line.

J. Install plastic ribbon tape continuous over. buried 6 inches below finish grade, above pipe line; coordinate with Division 31.

K. Install trace wire continuous over top of pipe. Above pipe line; coordinate with Division 31.

L. Pipe Cover and Backfilling:

1. Backfill trench in accordance with Division 31.
2. Maintain optimum moisture content of fill material to attain required compaction density.
3. After hydrostatic test, evenly backfill entire trench width by hand placing backfill material and hand tamping in 4 inches compacted layers to 6 inches minimum cover over top of jacket. Compact to 95 percent maximum density.
4. Evenly and continuously backfill remaining trench depth in uniform layers with backfill material.
5. Do not use wheeled or tracked vehicles for tamping.

3.5 INSTALLATION - ABOVE GROUND PIPING SYSTEMS

A. Install natural gas piping in accordance with NFPA 54.

B. Provide non-conducting dielectric connections wherever jointing dissimilar metals.

C. Route piping in orderly manner and maintain gradient.

D. Where required, bend pipe with pipe bending tools in accordance with procedures intended for that purpose.

E. Install piping to conserve building space and not interfere with use of space.

F. Size and install gas piping to provide sufficient gas to supply maximum appliance demand at pressure higher than appliance minimum inlet pressure.

G. Group piping whenever practical at common elevations.

H. Install piping to allow for expansion and contraction without stressing pipe, joints, or connected equipment.

I. Sleeve pipe passing through partitions, walls and floors. Refer to Section 23 05 29.

J. Install firestopping at fire rated construction perimeters and openings containing penetrating sleeves and piping. Refer to Section 22 05 29.

K. Provide clearance for installation of insulation and access to valves and fittings.

L. Provide access where valves and fittings are not exposed. Coordinate size and location of access doors with Section 08 31 13.

M. Install vent piping from gas pressure reducing valves to outdoors and terminate in weatherproof hood. Protect vent against entry of insects and foreign material.

1. Minimum Vent Size: Connection size at regulator vent connection.
2. Run individual vent line from each relief device, independent of breather vents.

N. Install identification on piping systems including underground piping. Refer to Section 23 05 53.

O. Install valves with stems upright or horizontal, not inverted.

P. Protect piping systems from entry of foreign materials by temporary covers, completing sections of the Work, and isolating parts of completed system.

3.6 FIELD QUALITY CONTROL

A. Section 01 40 00 - Quality Requirements or 017000 - Execution and Closeout Requirements: Field inspecting, testing, adjusting, and balancing.

B. Where gas appliance will be damaged by test pressure, disconnect appliance and cap piping during pressure test. Reconnect appliance after pressure test and leak test connection.

C. Where gas appliance is designed for operating pressures equal to or greater than piping test pressure, provide gas valve to isolate appliance or equipment from gas test pressure.

D. Pressure test natural gas piping in accordance with NFPA 54.

E. Inspect, test and purge gas piping in accordance with applicable code and local gas company requirements.

F. Where new branch piping is extended from existing system, pressure test new branch piping only. Leak test joint between new and existing piping with noncorrosive leak detection fluid or other approved method.

G. When pressure tests do not meet specified requirements, remove defective work, replace and retest.

H. Immediately after gas is applied to a new system, or a system has been restored after gas service interruption, check pipe for leakage.

1. Where leakage is detected, shut off gas supply until necessary repairs are complete.

I. Do not place appliances in service until leak testing and repairs are complete.

END OF SECTION

SECTION 22 34 00

DOMESTIC WATER HEATERS

PART 1 - GENERAL

1.1 SUMMARY

A. Section Includes:

1. Commercial gas-fired water heaters.
2. Packaged water heating systems.
3. Domestic hot water storage tanks.

B. Related Sections:

1. Section 03 30 00 - Cast-in-Place Concrete: Execution requirements for concrete housekeeping pads specified by this Section.
2. Section 22 05 13 - Common Motor Requirements for Plumbing Equipment: Product requirements for pump motors for placement by this Section.
3. Section 22 07 00 - Plumbing Insulation: Field applied insulation for domestic water heaters.
4. Section: 221100 - Facility Water Distribution: Supply connections to domestic water heaters.
5. Section 22 16 00 - Facility Natural-Gas Piping: Execution requirements for gas piping connections specified by this Section.
6. Section 26 05 03 - Equipment Wiring Connections: Execution requirements for electric connections specified by this Section.

1.2 REFERENCES

A. American National Standards Institute:

1. ANSI Z21.10.3 - Gas Water Heaters - Vol. III Storage, with Input Ratings Above 75,000 Btu per Hour, Circulating and Instantaneous Water Heaters.

B. American Society of Mechanical Engineers:

1. ASME Section VIII - Boiler and Pressure Vessel Code - Pressure Vessels.

C. National Fire Protection Association:

1. NFPA 54 - National Fuel Gas Code.

D. United States Department of Energy:

1. DOE 10 CFR - Uniform Test Method for Measuring the Energy Consumption of Furnaces.

1.3 SUBMITTALS

A. Section 01 33 00 - Submittal Procedures: Submittal procedures.

B. Shop Drawings: Not Required.

C. Product Data:

1. Water Heaters: Submit dimensioned drawings of water heaters indicating components and connections to other equipment and piping. Indicate pump type, capacity and power requirements. Submit electrical characteristics and connection locations.
2. Pumps: Submit certified pump curves showing pump performance characteristics with pump and system operating point plotted. Include NPSH curve when applicable.

D. Manufacturer's Installation Instructions: Submit mounting and support requirements.

E. Manufacturer's Certificate: Certify products meet or exceed specified requirements.

1.4 CLOSEOUT SUBMITTALS

A. Section 01 70 00 - Execution and Closeout Requirements: Closeout procedures.

B. Operation and Maintenance Data: Submit replacement part numbers and availability.

1.5 QUALITY ASSURANCE

A. Conform to ASME Section VIII for construction of water heaters. Provide boilers registered with National Board of Boiler and Pressure Vessel Inspectors.

B. Water Heater Performance Requirements: Equipment efficiency not less than prescribed by ASHRAE 90.1.

C. Maintain one copy of each document on Site.

1.6 QUALIFICATIONS

A. Manufacturer: Company specializing in manufacturing products specified in this Section with minimum three years' experience.

B. Installer: Company specializing in performing Work of this Section with minimum three years' experience.

1.7 PRE-INSTALLATION MEETINGS

A. Section 01 30 00 - Administrative Requirements: Pre-installation meeting.

B. Convene minimum one week prior to commencing Work of this Section.

1.8 DELIVERY, STORAGE, AND HANDLING

A. Section 01 60 00 - Product Requirements: Products storage and handling requirements.

B. Accept water heaters on Site in original labeled cartons. Inspect for damage.

C. Protect tanks with temporary inlet and outlet caps. Maintain caps in place until installation.

1.9 FIELD MEASUREMENTS

A. Verify field measurements prior to fabrication.

1.10 WARRANTY

A. Section 01 70 00 - Execution and Closeout Requirements: Product warranties and product bonds.

B. Furnish five-year manufacturer warranty for domestic water heaters packaged water heating systems.

1.11 EXTRA MATERIALS

A. Section 01 70 00 - Execution and Closeout Requirements: Spare parts and maintenance products.

B. Furnish two pump seals.

PART 2 - PRODUCTS

2.1 COMMERCIAL GAS FIRED WATER HEATERS

A. Manufacturers:

1. Lochinar, LLC.
2. A. O. Smith Corporation.
3. AERCO; A WATTS Brand.
4. Ajax Boiler Inc.
5. American Water Heaters.
6. Bock Water Heaters, Inc.
7. Bradford White Corporation.
8. Heat Transfer Products, Inc.
9. PVI; A WATTS Brand.
10. RBI.
11. Rheem Manufacturing Company.
12. State Industries.
13. Substitutions: Section 01 60 00 - Product Requirements.

B. Type: Automatic, natural gas -fired, vertical storage.

C. Capacity:

1. Storage Capacity: Refer to drawings.

D. Tank: Refer to drawings.

E. Accessories: Brass water connections and dip tube, drain valve, magnesium anode, and ASME rated temperature and pressure relief valve.

F. Controls: Automatic water thermostat with adjustable temperature range from 120 to 180 degrees F. Automatic reset high temperature limiting thermostat factory set at 195 degrees F, gas pressure regulator, multi-ribbon or tubular burner, 100 percent safety shut-off pilot and thermocouple, flue baffle and draft hood.

2.2 PACKAGED WATER HEATING SYSTEMS

A. Manufacturers:

1. Lochinvar, LLC.
2. Armstrong International, Inc.
3. Cemline Corporation.
4. Chromalox, Inc.
5. Substitutions: Section 01 60 00 - Product Requirements.

B. System: Gas-fired direct heating boiler, circulating pump, controls, piping and valves as indicated on Drawings, storage tank, all mounted on structural steel skid.

C. Boiler:

1. Type: natural gas-fired water tube boiler, with copper finned tube heat exchanger, 1-inch diameter, 13-gage steel boiler tubes and copper tube heat exchanger with bronze heads, steel jacket with glass fiber insulation.
2. Boiler Trim: Gas burner, thermometer and pressure gauge. Immersion thermostats for operating and high limit protection, 100 percent safety shut-off. Electric gas valve with transformer, electronic safety pilot and pilot burner, gas pressure regulator. Manual gas shut-off, low water cut off, ASME rated temperature and pressure relief valve, coil relief valve, automatic boiler fill and expansion tank, draft inverter.
3. Capacity:

a. Refer to drawings.

D. Vertical Storage Tank: Refer to Drawings

E. Pump: Refer to Drawings.

F. Thermostatic Valve: Three-way, self-contained, full line size, bronze body 1/2 inch to 2 inches in size, iron body 2-1/2 inches and over, set at 140 degrees F.

2.3 DOMESTIC HOT WATER STORAGE TANKS

A. Manufacturers:

1. Lochinvar, LLC
2. A. O. Smith Corporation.
3. Aldrich Company, Inc. (The).
4. American Water Heaters.
5. AMTROL, Inc.
6. Flexcon Industries.
7. GSW Water Heating.
8. Harsco Industrial, Patterson-Kelley.
9. Precision Boilers.
10. PVI; A WATTS Brand.
11. Raypak; a Rheem brand.
12. RBI.
13. RECO USA.
14. State Industries.
15. Substitutions: Section 01 60 00 - Product Requirements.

B. Tank: Refer to Drawings.

C. Lining: Refer to Drawings,

D. Accessories: Tank drain, water inlet and outlet, thermometer range of 40 to 200 degrees F, ASME pressure relief valve suitable for maximum working pressure.

E. Vertical Storage Tank: Refer to drawings.

F. Insulation: Refer to Section 22 07 00.

2.4 ELECTRICAL CHARACTERISTICS AND COMPONENTS

A. Electrical Characteristics: According to Section 26 05 03.

B. Motors: According to Section 22 05 13.

C. Disconnect Switch: Factory mount disconnect switch in control panel on equipment.

PART 3 - EXECUTION

3.1 INSTALLATION

A. Maintain manufacturer's recommended clearances around and over water heaters.

B. Install water heater on concrete housekeeping pad, minimum 3-1/2 inches high and 6 inches larger than water heater base on each side. Refer to Section 03 30 00.

C. Connect natural gas piping according to NFPA 54.

D. Connect natural gas piping to water heater, full size of water heater gas train inlet. Arrange piping with clearances for burner removal and service.

E. Connect domestic hot and cold water piping to supply and return water heater connections.

F. Install the following piping accessories. Refer to Section 22 11 00.

1. On Supply:

a. Thermometer well and thermometer.
b. Strainer.
c. Pressure gage.
d. Shutoff valve.

2. On Return:

a. Thermometer well and thermometer.
b. Pressure gage.
c. Shutoff valve.

G. Install the following piping accessories on natural gas piping connections. Refer to Section 22 16 00.

1. Strainer.
2. Pressure gage.
3. Shutoff valve.
4. Pressure reducing valve.

H. Install discharge piping from relief valves and drain valves to nearest floor drain.

I. Install circulator and diaphragm expansion tank on water heater.

J. Install water heater trim and accessories furnished loose for field mounting.

K. Install electrical devices furnished loose for field mounting.

L. Install control wiring between water heater control panel and field mounted control devices.

M. Connect flue to water heater outlet, full size of outlet. Refer to Section 23 51 00.

N. Domestic Hot Water Storage Tanks:

1. Provide steel pipe support, independent of building structural framing members.
2. Clean and flush after installation. Seal until pipe connections are made.

END OF SECTION

SECTION 22 40 00

PLUMBING FIXTURES

PART 1 - GENERAL

1.1 SUMMARY

A. Section Includes:

1. Water closets.
2. Urinals.
3. Lavatories.
4. Sinks.
5. Service sinks.
6. Drinking fountains.
7. Showers.
8. Emergency combination shower with eye and face wash.
9. Lavatory insulation kit.

B. Related Sections:

1. Section 07 90 00 - Joint Protection: Product requirements for calking between fixtures and building components for placement by this Section.
2. Section 22 11 00 - Facility Water Distribution: Supply connections to plumbing fixtures.
3. Section 22 13 00 - Facility Sanitary Sewerage: Waste connections to plumbing fixtures.
4. Section 26 05 03 - Equipment Wiring Connections: Execution requirements for electric connections to sensor valves and faucets specified by this Section.

1.2 REFERENCES

A. American National Standards Institute:

1. ANSI Z124.2 - Plastic Shower Units.
2. ANSI Z358.1 - Emergency Eyewash and Shower Equipment.

B. Air-Conditioning and Refrigeration Institute:

1. ARI 1010 - Self-Contained, Mechanically Refrigerated Drinking-Water Coolers.

C. American Society of Mechanical Engineers:

1. ASME A112.6.1 - Floor-Affixed Supports for Off-the-Floor Plumbing Fixtures for Public Use.
2. ASME A112.18.1 - Plumbing Fixture Fittings.
3. ASME A112.19.1M - Enameled Cast Iron Plumbing Fixtures.
4. ASME A112.19.2M - Vitreous China Plumbing Fixtures.
5. ASME A112.19.3 - Stainless Steel Plumbing Fixtures (Designed for Residential Use).

6. ASME A112.19.4 - Porcelain Enameled Formed Steel Plumbing Fixtures.
7. ASME A112.19.5 - Trim for Water-Closet Bowls, Tanks and Urinals.

1.3 SUBMITTALS

A. Section 01 33 00 - Submittal Procedures: Submittal procedures.

B. Product Data: Submit catalog illustrations of fixtures, sizes, utility sizes, trim, and finishes.

C. Samples: Not Required.

D. Manufacturer's Installation Instructions: Submit installation methods and procedures.

E. Manufacturer's Certificate: Certify products meet or exceed specified requirements.

1.4 SUSTAINABLE DESIGN SUBMITTALS

A. Section 01 81 13 - Sustainable Design Requirements: Requirements for sustainable design submittals.

B. Manufacturer's Certificate: Certify products meet or exceed specified sustainable design requirements.

1. Water Efficiency Certificates:

a. Certify plumbing fixture flow rates.
b. CLOSEOUT SUBMITTALS

C. Section 01 70 00 - Execution and Closeout Requirements: Closeout procedures.

D. Operation and Maintenance Data: Submit fixture, trim, exploded view, and replacement parts lists.

1.5 QUALITY ASSURANCE

A. Perform Work according to of standard.

B. Provide products requiring electrical connections listed and classified by as suitable for purpose specified and indicated.

C. Provide plumbing fixture fittings according to ASME A112.18.1 that prevent backflow from fixture into water distribution system.

D. Maintain one copy of each document on Site.

1.6 QUALIFICATIONS

A. Manufacturer: Company specializing in manufacturing products specified in this Section with minimum three years' experience .

B. Installer: Company specializing in performing Work of this Section with minimum three years' experience.

1.7 MOCKUPS

A. Section 01 40 00 - Quality Requirements: Mockup requirements.

B. Construct mockup of typical bathroom group.

C. Locate where.

D. Incorporate accepted mockup as part of Work.

1.8 PRE-INSTALLATION MEETINGS

A. Section 01 30 00 - Administrative Requirements: Pre-installation meeting.

B. Convene minimum prior to commencing Work of this Section.

1.9 DELIVERY, STORAGE, AND HANDLING

A. Section 01 60 00 - Product Requirements: Product storage and handling requirements.

B. Accept fixtures on Site in factory packaging. Inspect for damage.

C. Protect installed fixtures from damage by securing areas and by leaving factory packaging in place to protect fixtures and prevent use.

1.10 WARRANTY

A. Section 01 70 00 - Execution and Closeout Requirements: Product warranties and product bonds.

B. Furnish 5-year manufacturer warranty for plumbing fixtures.

1.11 EXTRA MATERIALS

A. Section 01 70 00 - Execution and Closeout Requirements: Spare parts and maintenance products.

B. Furnish two sets of faucet washers, flush valve, service kits, lavatory supply fittings, shower heads, and toilet seats.

PART 2 - PRODUCTS

2.1 FLUSH VALVE WATER CLOSETS (REFER TO PLUMBING SCHEDULE FOR MAKE & MODEL)

A. Manufacturers:

1. American Standard.
2. Sloan.
3. Crane Plumbing, LLC; a division of American Standard.
4. Gerber Plumbing Fixtures LLC.
5. Kohler Co.
6. TOTO USA, INC.
7. Zurn Industries, LLC.
8. Substitutions: Section 01 60 00 – Product Requirements.

B. Bowl: ASME A112.19.2M; wall hung, vitreous china closet bowl, with elongated rim, 1-1/2-inch spud, china bolt caps.

C. Sensor Operated Flush Valve: ASME A112.18.1; concealed rough brass, diaphragm type with operated solenoid operator, infrared sensor and over-ride button in chrome-plated plate, wheel handle stop and vacuum breaker; maximum 1.28 gal. Flush volume.

D. Seat: Solid plastic, open front, extended back, brass bolts, cover.

E. Floor Mounted Carrier: ASME A112.6.1; cast iron frame, integral drain hub and vent, adjustable spud, lugs for floor and wall attachment, threaded fixture studs with nuts and washers.

2.2 WALL HUNG URINALS (REFER TO PLUMBING SCHEDULE FOR MAKE & MODEL)

A. Manufacturers:

1. American Standard.
2. Sloan.
3. Crane Plumbing, LLC; a division of American Standard.
4. Gerber Plumbing Fixtures LLC.
5. Kohler Co.
6. TOTO USA, INC.
7. Zurn Industries, LLC.
8. Substitutions: Section 01 60 00 – Product Requirements .

B. Urinal: ASME A112.19.2M or ANSI Z124.9, vitreous; vitreous china, wall hung urinal with shields, integral trap, spud, steel supporting hanger.

C. Sensor Operated Flush Valve: ASME A112.18.1;, diaphragm type with operated solenoid operator, infrared sensor and over-ride button in chrome-plated plate, wheel handle stop and vacuum breaker; maximum 0.5 gal. flush volume.

D. Floor Mounted Carrier: ASME A112.6.1; cast iron and steel frame with tubular legs, lugs for floor and wall attachment, threaded fixture studs for fixture hanger, bearing studs.

E. Provide elastomeric gasket complying with ASME A112.4.3, or approved setting compound, for fixture to flange connection.

2.3 LAVATORIES (REFER TO PLUMBING SCHEDULE FOR MAKE & MODEL)

A. Manufacturers:

1. American Standard.
2. Sloan.
3. Crane Plumbing, LLC; a division of American Standard.
4. Gerber Plumbing Fixtures LLC.
5. Kohler Co.
6. TOTO USA, INC.
7. Zurn Industries, LLC.
8. Substitutions: Section 01 60 00 – Product Requirements.

B. Vitreous China Wall Hung Basin: ASME A112.19.2M; vitreous china wall hung lavatory by inches minimum, with 4-inch high back, drillings on centers, rectangular basin with splash lip, front overflow, and soap depression.

C. Vitreous China Counter Top Basin: ASME A112.19.2M; vitreous china self-rimming counter top lavatory, by inches with drillings on centers, front overflow, seal of putty, caulking, or concealed vinyl gasket.

D. Undercounter Lavatory: ASME A112.19.2M; vitreous china, unglazed rim for under counter mount with rear overflow, by inches with drillings on centers.

E. Supply Fitting: ASME A112.18.1; chrome-plated supply fitting with water economy aerator with maximum 0.5 gpm flow,.

F. Metered Faucet: ASME A112.18.1; chrome-plated metered mixing faucet with low voltage operated solenoid operator and infrared sensor, and cover plate, open grid strainer.

G. Waste Fittings: ASME A112.18.2 or ASTM F 409.

H. For public hand washing facilities, provide tempered water through regulating device conforming to ASSE 1070.

I. Accessories:

1. Chrome-plated 17-gage brass P-trap and arm with escutcheon.
2. Offset waste with perforated open strainer.
3. Wheel handle stops.
4. Flexible supplies.
5. Trap and waste insulated and offset to meet ADA compliance.

J. Wall Mounted Carrier: ASME A112.6.1; cast iron and steel frame with tubular legs, lugs for floor and wall attachment, bearing plate and studs.

2.4 SINKS (REFER TO PLUMBING SCHEDULE FOR MAKE & MODEL)

A. Manufacturers:

1. Elkay.
2. Just Manufacturing.
3. Commercial Enameling Company.
4. Kohler Co.
5. Substitutions: Section 01 60 00 – Product Requirements.

B. Single Compartment Bowl: ASME A112.19.3; by by inches outside dimensions, thick, Type stainless steel. Self-rimming and undercoated, with , ledge back drilled for trim.

C. Double Compartment Bowl: ASME A112.19.3; by by inches outside dimensions thick, Type stainless steel. Self-rimming and undercoated, with , ledge back drilled for trim.

D. Enameled Bowl: porcelain enameled compartment, by by inches outside dimensions, self-rimming and undercoated, with 3-1/2-inch diameter crumb cup and chromed brass tailpiece, ledge back drilled for trim.

E. Trim: ASME A112.18.1; chrome-plated brass supply with swing spout, water economy aerator with maximum 1.5 gpm flow,.

F. Accessories: 17-gage brass P-trap and arm with escutcheon, stop, supplies.

2.5 SHOWERS (REFER TO PLUMBING SCHEDULE FOR MAKE & MODEL)

A. Manufacturers:

1. Symmons.
2. Aqua Glass Corporation.
3. Aquarius Bathware; a Praxis Company.
4. Aquatic Industries, Inc.
5. Clarion Bathware.
6. Crane Plumbing, LLC; a division of American Standard.
7. Kohler Co.
8. Zurn Industries, LLC.
9. Substitutions: Section 01 60 00 – Product Requirements.

B. Cabinet: ASME A112.19.4; porcelain enameled steel, high, with receptor, soap dish, removable chrome-plated strainer, tail piece, color.

C. Cabinet: ANSI Z124.2 , high, with receptor, soap dish, removable chrome-plated strainer, tailpiece, color.

D. Trim: ASME A112.18.1; concealed shower supply with indexed handles, bent shower arm with ball joint showerhead with maximum 1.5 gpm flow, and escutcheon.

E. Trim: ASME A112.18.1; concealed straight way pattern valve with indexed cross handle.

F. Trim: ASME A112.18.1; concealed rough brass metering valve with closed fluid metering system adjustable from 5 to 120 seconds, chrome-plated push button and escutcheon, wheel handle stop.

G. Trim: ASME A112.18.1; concealed shower supply with mixing valves, integral service stops, bent shower arm with ball joint shower head with maximum 1.5 gpm flow, and escutcheon.

H. Trim: ASME A112.18.1; chrome-plated vandal-proof institutional head with integral wall bracket and built-in 2.5 gpm flow control.

I. Trim: ASME A112.18.1; concealed shower supply with mixing valves, integral service stops, hand held shower with hose and slide bar, female inlet.

J. Trim: ASME A112.18.1; built-in 1.5 gpm flow control, hand held shower with hose and slide bar, female inlet.

1. Provide backflow protection according to ASME A112.18.1 or by device complying with ASME 112.18.3.

2.6 DRINKING FOUNTAINS (REFER TO PLUMBING SCHEDULE FOR MAKE & MODEL)

A. Manufacturers:

1. Elkay.
2. Halsey Taylor.
3. Haws Corporation.
4. Kohler Co.
5. Murdock Manufacturing; A Division of Morris Group International.
6. Oasis International.
7. Substitutions: Section 01 60 00 – Product Requirements.

B. Fountain: 14 gage, type 304 stainless steel with elevated anti-squirt bubbler with stream guard, automatic stream regulator, handle, access cover plate, mounting bracket, screwdriver stop. Provide with bottle filler.

2.7 SERVICE SINKS (REFER TO PLUMBING SCHEDULE FOR MAKE & MODEL)

A. Manufacturers:

1. Acorn Engineering Company; a Division of Morris Group International.
2. American Standard.
3. Commercial Enameling Company.
4. Crane Plumbing, LLC; a division of American Standard.
5. Florestone Products Co., Inc.
6. Gerber Plumbing Fixtures LLC.
7. Kohler Co.
8. Stern-Williams Co., Inc.
9. Swan Corporation (The).
10. Zurn Industries, LLC.
11. Substitutions: Section 01 60 00 – Product Requirements.

B. Bowl: White, cast iron, floor mounted, with bumper guard, stainless-steel strainer.

C. Trim: ASME A112.18.1 exposed wall type supply with handles, spout wall brace, vacuum breaker, hose end spout, strainers, eccentric adjustable inlets, integral screwdriver stops with covering caps and adjustable threaded wall flanges.

D. Accessories:

1. 5 feet of 1/2 inch diameter plain end reinforced hose.
2. Hose clamp hanger.
3. Mop hanger.

2.8 EMERGENCY COMBINATION SHOWER WITH EYE AND FACE WASH (REFER TO PLUMBING SCHEDULE FOR MAKE & MODEL)

A. Manufacturers:

1. Guardian Equipment Co.
2. Acorn Safety; a Division of Morris Group International.
3. Bradley Corporation.
4. Haws Corporation.
5. Substitutions: Section 01 60 00 - Product Requirements.

B. Shower: ANSI Z358.1; free standing, self- cleaning, non-clogging 8-inchdiameter stainless-steel shower head, instant action stay open valve actuated by rigid stainless-steel pull rod.

C. Eyewash: ANSI Z358.1; stainless-steel bowl with elbow, 1-1/4-inch stainless-steel pipe pedestal with floor flange, instant action stay open valve actuated by push flag, twin spray heads, and tailpiece and chrome-plated brass P-trap.

D. Supply and Waste Piping: 1-1/4-inch stainless-steel pipe pedestal with floor flange.

E. Furnish universal emergency sign.

F. Furnish corrosion resistant coating.

2.9 LAVATORY INSULATION KIT

A. Manufacturers:

1. Plumberex Specialty Products, Inc.
2. Truebro.
3. Substitutions: Section 01 60 00 – Product Requirements.

B. Product Description: Where Lavatories are noted to be insulated for ADA compliance, furnish the following: Safety Covers conforming to ANSI A177.1 and consisting of insulation kit of molded closed cell vinyl construction, 3/16 inch thick, color, for insulating tailpiece, P-trap, valves, and supply piping. Furnish with weep hole and angle valve access covers.

PART 3 - EXECUTION

3.1 EXAMINATION

A. Section 01 30 00 - Administrative Requirements: Coordination and project conditions.

B. Verify walls and floor finishes are prepared and ready for installation of fixtures.

C. Verify electric power is available and of correct characteristics.

D. Confirm millwork is constructed with adequate provision for installation of counter top lavatories and sinks.

3.2 PREPARATION

A. Rough-in fixture piping connections according to minimum sizes indicated in fixture rough-in schedule for particular fixtures.

3.3 INSTALLATION

A. Install each fixture with trap, easily removable for servicing and cleaning.

B. Provide chrome-plated rigid or flexible supplies to fixtures with stops, reducers, and escutcheons.

C. Install components level and plumb.

D. Install and secure fixtures in place with wall and bolts.

E. Seal fixtures to wall and floor surfaces with sealant as specified in Section 07 90 00, color to match fixture.

F. Solidly attach water closets to floor with lag screws. Lead flashing is not intended hold fixture in place.

G. For ADA accessible water closets, install flush valve with handle to wide side of stall.

3.4 INTERFACE WITH OTHER PRODUCTS

A. Review millwork shop-drawings. Confirm location and size of fixtures and openings before rough in and installation.

3.5 ADJUSTING

A. Section 01 70 00 - Execution and Closeout Requirements: Testing, adjusting, and balancing.

B. Adjust stops or valves for intended water flow rate to fixtures without splashing, noise, or overflow.

3.6 CLEANING

A. Section 01 70 00 - Execution and Closeout Requirements: Final cleaning.

B. Clean plumbing fixtures and equipment.

3.7 PROTECTION OF INSTALLED CONSTRUCTION

A. Section 01 70 00 - Execution and Closeout Requirements: Protecting installed construction.

B. Do not permit use of fixtures before final acceptance.

END OF SECTION

SECTION 23 05 00

COMMON WORK RESULTS FOR HVAC

PART 1 - GENERAL

1.1 SUMMARY`

A. Section Includes:

1. Vibration and seismic controls for HVAC piping and equipment.
2. Mechanical seals for interior, exterior, below grade pipe penetrations.
3. PHP design supports for roof top ducts, piping & crossovers.
4. Sleeves for interior floor and wall pipe penetrations.
5. Pipe and valve markers for HVAC systems.
6. Firestopping relating to HVAC work.
7. Nameplates for HVAC equipment.
8. Calif. Mech Code supports.
9. Steel channel.
10. Motors.

1.2 SUBMITTALS

A. Product Data: Required.

B. Shop Drawings: Required.

C. Samples: Required for pipe and equipment identification.

D. Project Record Documents: Required.

PART 2 - PRODUCTS

2.1 MOTORS

A. Manufacturers:

1. U.S. manufactured motors for intended service odp, tefc, vfd, ecm, insulation, torque, service factor, nema.
2. Substitutions: Not Permitted.

B. Motor Type: NEMA with bearing shaft grounding ring for vfd motors.

C. Controls: Provide Nema control panels as required, Lonworks or BacNet IP.

2.2 VIBRATION AND SEISMIC CONTROLS FOR HVAC PIPING AND EQUIPMENT

A. Provide the following types of seismic vibration isolators:

1. Structural bases.

2. Open spring isolators.
3. Restrained spring isolators.
4. Closed spring isolators.
5. Restrained closed spring isolators.
6. Spring curbs and hangers.
7. Neoprene pad isolators.
8. Rubber mount or hanger.
9. Glass fiber pads.
10. Seismic snubbers.

2.3 IDENTIFICATION FOR HVAC PIPING AND EQUIPMENT

A. Plastic Nameplates: Laminated plastic with engraved letters.

B. Plastic Tags: Laminated plastic with engraved letters, minimum 1-1/2 inches diameter.

C. Plastic Pipe Markers: Factory fabricated, flexible, semi-rigid plastic, preformed to fit around pipe or pipe covering.

D. Plastic Tape Pipe Markers: Flexible, vinyl film tape with pressure sensitive adhesive backing and printed markings.

E. Plastic Underground Pipe Markers: Bright colored continuously printed plastic ribbon tape, for direct burial service.

2.4 SLEEVES

A. Sleeves for Pipes Through Non-fire Rated Floors: 18 gage thick galvanized steel.

B. Sleeves for Pipes Through Non-fire Rated Beams, Walls, Footings, and Potentially Wet Floors: Steel pipe or 18 gage thick galvanized steel.

C. Sleeves for Round Ductwork: Galvanized steel.

D. Sleeves for Rectangular Ductwork: Galvanized steel or wood.

2.5 MECHANICAL SLEEVE SEALS

A. Modular mechanical type, consisting of interlocking synthetic rubber links shaped to continuously fill annular space between object and sleeve, connected with bolts and pressure plates causing rubber sealing elements to expand when tightened, providing watertight seal and electrical insulation.

2.6 FORMED STEEL CHANNEL

A. Product Description: Galvanized 12 gage) thick steel. With holes 1-1/2 inches on center.

2.7 FIRESTOPPING

A. Firestopping Materials: Comply with requirements of Section 07 84 00.

B. Firestopping Materials: HILTI or approved equal.

1. Silicone firestopping elastomeric firestopping.
2. Foam firestopping compounds.
3. Formulated firestopping compound of incombustible fibers.
4. Fiber stuffing and sealant firestopping.
5. Mechanical firestopping device with fillers.
6. Intumescent firestopping.
7. Firestop pillows.

PART 3 - EXECUTION

3.1 INSTALLATION - PIPING AND EQUIPMENT IDENTIFICATION

A. Install plastic nameplates with adhesive.

B. Install plastic tags with corrosion resistant metal chain.

3.2 INSTALLATION - SLEEVES

A. Exterior watertight entries: Seal with mechanical sleeve seals.

B. Set sleeves in position in forms. Provide reinforcing around sleeves.

C. Size sleeves large enough to allow for movement due to expansion and contraction. Provide for continuous insulation wrapping.

D. Extend sleeves through floors 1 inch above finished floor level. Caulk sleeves.

E. Install stainless steel escutcheons at finished surfaces.

3.3 INSTALLATION - FIRESTOPPING

A. Firestopping Materials: Install material at fire rated construction perimeters and openings containing penetrating sleeves, piping, ductwork, conduit and other items, requiring firestopping.

END OF SECTION

SECTION 23 05 13

COMMON MOTOR REQUIREMENTS FOR HVAC EQUIPMENT

PART 1 - GENERAL

1.1 SUMMARY

A. Section includes single- and three-phase motors for application on equipment provided under other sections.

B. Related Sections:

1. Division 26 - Grounding and Bonding for Electrical Systems.
2. Division 26 - Identification for Electrical Systems.

1.2 REFERENCES

A. American Bearing Manufacturers Association:

1. ABMA 9 - Load Ratings and Fatigue Life for Ball Bearings.

B. National Electrical Manufacturers Association:

1. NEMA MG 1 - Motors and Generators.

C. International Electrical Testing Association:

1. NETA ATS - Acceptance Testing Specifications for Electrical Power Distribution Equipment and Systems.

1.3 SUBMITTALS

A. Division 01 - Submittal Procedures: Submittal procedures.

B. Product Data: Submit catalog data for each motor. Indicate nameplate data, standard compliance, electrical ratings and characteristics, and physical dimensions, weights, mechanical performance data, and support points.

1.4 DELIVERY, STORAGE, AND HANDLING

A. Division 01 - Product Requirements: Product storage and handling requirements.

B. Protect products from weather and moisture by covering with plastic or canvas and by maintaining heating within enclosure.

PART 2 - PRODUCTS

2.1 PRODUCT REQUIREMENTS FOR MOTORS FURNISHED WITH EQUIPMENT

A. Manufacturers: Shall be in accordance with equipment manufacturer's preference.

B. Motors 1 hp and Larger: Three-phase motor as specified below.

C. Motors Smaller Than 1 hp: Single-phase motor as specified below, except motors less than 250 watts or 1/4 hp may be equipment manufacturer's standard.

D. Three-Phase Motors: NEMA MG 1, Design B, energy-efficient squirrel-cage induction motor, with windings to accomplish starting methods and number of speeds.

1. Voltage: As indicated on Drawings.
2. Service Factor: 1.15.
3. Enclosure: Meet conditions of installation unless specific enclosure is indicated on Drawings.
4. Design for continuous operation in 40 degrees C environment, with temperature rise in accordance with NEMA MG 1 limits for insulation class, service factor, and motor enclosure type.
5. Insulation System: NEMA Class F. Motor insulation shall meet UL flame/smoke rating of 25/50 or less.
6. Motor Frames: NEMA Standard T-Frames of steel, aluminum, or cast iron with end brackets of cast iron or aluminum with steel inserts.
7. Thermistor System (Motor Frame Sizes 254T and Larger): Three PTC thermistors embedded in motor windings and epoxy encapsulated solid state control relay with wiring to terminal box.
8. Bearings: Grease lubricated anti-friction ball bearings with housings equipped with plugged provision for relubrication, rated for minimum ABMA 9, L-10 life of 200,000 hours. Calculate bearing load with NEMA minimum V-belt pulley with belt center line at end of NEMA standard shaft extension. Stamp bearing sizes on nameplate.
9. Sound Power Levels: Conform to NEMA MG 1.

E. Single Phase Motors:

1. Permanent split-capacitor type, where available, otherwise use split-phase start/capacitor run or capacitor start/capacitor run motor.
2. HVAC motors for fans less than 1 hp and greater than 1/12 hp shall be ECM or have minimum motor efficiency of 70%. Motors must have means to adjust motor speed for balancing or remote control.
3. Voltage: As indicated on drawings.

F. Wiring Terminations: Furnish terminal lugs to match branch circuit conductor quantities, sizes, and materials indicated.

PART 3 - EXECUTION

3.1 INSTALLATION

A. Install securely on firm foundation. Mount ball bearing motors with shaft in any position.

B. Install engraved plastic nameplates in accordance with Division 26.

C. Ground and bond motors in accordance with Division 26.

3.2 FIELD QUALITY CONTROL

A. Division 01 - Quality Requirements and - Execution and Closeout Requirements: Field inspecting, testing, adjusting, and balancing.

B. Inspect and test in accordance with NETA ATS, except Section 4.

C. Perform inspections and tests listed in NETA ATS, Section 7.15.

END OF SECTION

SECTION 23 05 29

HANGERS AND SUPPORTS FOR HVAC PIPING AND EQUIPMENT

PART 1 - GENERAL

1.1 SUMMARY

A. Section Includes:

1. Pipe hangers and supports.
2. Hanger rods.
3. Inserts.
4. Flashing.
5. Equipment curbs.
6. Sleeves.
7. Mechanical sleeve seals.
8. Formed steel channel.
9. Firestopping accessories.
10. Equipment bases and supports.
11. See Contract Drawings for seismic bracing of ductwork, piping and equipment.

B. Related Sections:

1. Section 03 10 00 - Concrete Forming and Accessories: Execution requirements for placement of inserts in concrete forms specified by this section.
2. Section 03 30 00 - Cast-In-Place Concrete: Execution requirements for placement of concrete housekeeping pads specified by this section.
3. Section 07 84 00 - Firestopping: Product requirements for firestopping for placement by this section.
4. Section 07 92 00 - Joint Sealant: Product requirements for sealant materials for placement by this section.
5. Section 09 90 00 - Painting and Coating: Product and execution requirements for painting specified by this section.
6. Section 23 05 48 - Vibration and Seismic Controls for HVAC Piping and Equipment: Product and execution requirements for vibration isolators.
7. Section 23 21 13 - Hydronic Piping: Execution requirements for placement of hangers and supports specified by this section.

1.2 REFERENCES

A. American Society of Mechanical Engineers:

1. ASME B31.5 - Refrigeration Piping.
2. ASME B31.9 - Building Services Piping.

B. American Welding Society:

1. AWS D1.1 - Structural Welding Code - Steel.

C. FM Global:

1. FM - Approval Guide, A Guide to Equipment, Materials & Services Approved By Factory Mutual Research For Property Conservation.

D. Manufacturers Standardization Society of the Valve and Fittings Industry:

1. MSS SP 58 - Pipe Hangers and Supports - Materials, Design and Manufacturer.
2. MSS SP 69 - Pipe Hangers and Supports - Selection and Application.
3. MSS SP 89 - Pipe Hangers and Supports - Fabrication and Installation Practices.

E. Intertek Testing Services (Warnock Hersey Listed):

1. WH - Certification Listings.

1.3 SUBMITTALS

A. Section 01 33 00 - Submittal Procedures: Submittal procedures.

B. Shop Drawings: Indicate system layout with location including critical dimensions, sizes, and pipe hanger and support locations and detail of trapeze hangers.

C. Product Data:

1. Hangers and Supports: Submit manufacturers catalog data including load capacity.

D. Design Data: Indicate load carrying capacity of trapeze, multiple pipe, and riser support hangers. Indicate calculations used to determine load carrying capacity of trapeze, multiple pipe, and riser support hangers. Submit sizing methods or calculations sealed by a registered professional engineer.

E. Manufacturer's Installation Instructions:

1. Hangers and Supports: Submit special procedures and assembly of components.

F. Manufacturer's Certificate: Certify products meet or exceed specified requirements.

1.4 QUALIFICATIONS

A. Manufacturer: Company specializing in manufacturing Products specified in this section with minimum five years experience.

B. Installer: Company specializing in performing Work of this section with minimum five years documented experience.

1.5 PRE-INSTALLATION MEETINGS

A. Section 01 31 00 – Project Management and Coordination: Pre-installation meeting.

1.6 DELIVERY, STORAGE, AND HANDLING

A. Section 01 61 00 - Product Requirements: Requirements for transporting, handling, storing, and protecting products.

B. Accept materials on site in original factory packaging, labeled with manufacturer's identification.

C. Protect from weather and construction traffic, dirt, water, chemical, and damage, by storing in original packaging.

1.7 FIELD MEASUREMENTS

A. Verify field measurements prior to fabrication.

1.8 WARRANTY

A. Section 01 73 00 – Execution Requirements and Section 01 77 00 – Closeout Requirements: Product warranties and product bonds.

B. Furnish five year manufacturer warranty for pipe hangers and supports.

PART 2 - PRODUCTS

2.1 PIPE HANGERS AND SUPPORTS

A. Manufacturers:

1. B-Line Systems.
2. Anvil.
3. Tolco.
4. Unistrut Corp.
5. PHD Manufacturing Inc.
6. Anvil International.

B. Hydronic Piping:

1. Conform to ASME B31.9.
2. Hangers for Pipe Sizes 1/2 to 1-1/2 inch: Malleable iron or Carbon steel, adjustable swivel, split ring.
3. Hangers for Cold Pipe Sizes 2 inches and Larger: Carbon steel, adjustable, clevis.
4. Hangers for Hot Pipe Sizes 2 to 4 inches: Carbon steel, adjustable, clevis.
5. Hangers for Hot Pipe Sizes 6 inches and Larger: Adjustable steel yoke, cast iron roll, double hanger.
6. Multiple or Trapeze Hangers: Steel channels with welded spacers and hanger rods.
7. Multiple or Trapeze Hangers for Hot Pipe Sizes 6 inches and Larger: Steel channels with welded spacers and hanger rods, cast iron roll.
8. Wall Support for Pipe Sizes 3 inches and Smaller: Cast iron hooks.
9. Wall Support for Pipe Sizes 4 inches and Larger: Welded steel bracket and wrought steel clamp.
10. Wall Support for Hot Pipe Sizes 6 inches and Larger: Welded steel bracket and wrought steel clamp with adjustable steel yoke and cast iron roll.
11. Vertical Support: Steel riser clamp.

12. Floor Support for Cold Pipe: Cast iron adjustable pipe saddle, lock nut, nipple, floor flange, and concrete pier or steel support.
13. Floor Support for Hot Pipe Sizes 4 Inches and Smaller: Cast iron adjustable pipe saddle, lock nut, nipple, floor flange, and concrete pier or steel support.
14. Floor Support for Hot Pipe Sizes 6 inches and Larger: Adjustable cast iron roll and stand, steel screws, and concrete pier or steel support.
15. Copper Pipe Support: Copper-plated, carbon steel ring.

C. Refrigerant Piping:

1. Conform to ASME B31.5.
2. Hangers for Pipe Sizes 1/2 to 1-1/2 inch: Malleable iron or Carbon steel, adjustable swivel, split ring.
3. Hangers for Pipe Sizes 2 inches and Larger: Carbon steel, adjustable, clevis.
4. Multiple or Trapeze Hangers: Steel channels with welded spacers and hanger rods.
5. Wall Support for Pipe Sizes 3 inches and Smaller: Cast iron hook.
6. Wall Support for Pipe Sizes 4 inches and Larger: Welded steel bracket and wrought steel clamp.
7. Vertical Support: Steel riser clamp.
8. Floor Support: Cast iron adjustable pipe saddle, lock nut, nipple, floor flange, and concrete pier or steel support.
9. Copper Pipe Support: Copper-plated carbon-steel ring.

2.2 ACCESSORIES

A. Hanger Rods: Mild steel threaded both ends, threaded on one end, or continuous threaded.

2.3 INSERTS

A. Inserts: Malleable iron case of galvanized steel shell and expander plug for threaded connection with lateral adjustment, top slot for reinforcing rods, lugs for attaching to forms; size inserts to suit threaded hanger rods.

2.4 FLASHING

A. Metal Flashing: 26 gage thick galvanized steel.

B. Metal Counterflashing: 22 gage thick galvanized steel.

C. Lead Flashing:

1. Waterproofing: 5 lb./sq. ft sheet lead.
2. Soundproofing: 1 lb./sq. ft sheet lead.

D. Flexible Flashing: 47 mil thick sheet butyl; compatible with roofing.

E. Caps: Steel, 22 gage minimum; 16 gage at fire resistant elements.

2.5 EQUIPMENT CURBS

A. Fabrication: Welded 18 gage galvanized steel shell and base, mitered 3 inch cant, variable step to match roof insulation, 1-1/2 inch thick insulation, factory installed wood nailer.

2.6 SLEEVES

A. Sleeves for Pipes Through Non-fire Rated Floors: 18 gage thick galvanized steel.

B. Sleeves for Pipes Through Non-fire Rated Beams, Walls, Footings, and Potentially Wet Floors: Steel pipe or 18 gage thick galvanized steel.

C. Sleeves for Round Ductwork: Galvanized steel.

D. Sleeves for Rectangular Ductwork: Galvanized steel or wood.

E. Sealant: Refer to Section 07 90 00.

2.7 MECHANICAL SLEEVE SEALS

A. Manufacturers:

1. Thunderline Link-Seal, Inc.
2. NMP Corporation.
3. Substitutions: Section 01 61 00 - Product Requirements.

B. Product Description: Modular mechanical type, consisting of interlocking synthetic rubber links shaped to continuously fill annular space between object and sleeve, connected with bolts and pressure plates causing rubber sealing elements to expand when tightened, providing watertight seal and electrical insulation.

2.8 FORMED STEEL CHANNEL

A. Manufacturers:

1. Allied Tube & Conduit Corp.
2. B-Line Systems.
3. Midland Ross Corporation, Electrical Products Division.
4. Unistrut Corp.

B. Product Description: Galvanized 12 gage thick steel. With holes 1-1/2 inches on center.

PART 3 - EXECUTION

3.1 INSTALLATION - INSERTS

A. Install inserts for placement in concrete forms.

B. Install inserts for suspending hangers from reinforced concrete slabs and sides of reinforced concrete beams.

C. Provide hooked rod to concrete reinforcement section for inserts carrying pipe 4 inches and larger.

D. Where concrete slabs form finished ceiling, locate inserts flush with slab surface.

E. Where inserts are omitted, drill through concrete slab from below and provide through-bolt with recessed square steel plate and nut recessed into and grouted flush with slab.

3.2 INSTALLATION - PIPE HANGERS AND SUPPORTS

A. Install in accordance with ASME B31.5 and ASME 31.9.

B. Support horizontal piping as scheduled.

C. Install hangers with minimum 1/2 inch space between finished covering and adjacent work.

D. Place hangers within 12 inches of each horizontal elbow.

E. Use hangers with 1-1/2 inch minimum vertical adjustment.

F. Support vertical piping at every floor.

G. Where piping is installed in parallel and at same elevation, provide multiple pipe or trapeze hangers.

H. Support riser piping independently of connected horizontal piping.

I. Provide packing between hanger or support and piping.

J. Design hangers for pipe movement without disengagement of supported pipe.

K. Prime coat exposed steel hangers and supports. Refer to Section 09 90 00. Hangers and supports located in crawl spaces, pipe shafts, and suspended ceiling spaces are not considered exposed.

L. Provide clearance in hangers and from structure and other equipment for installation of insulation. Refer to Section 22 07 00.

3.3 INSTALLATION - EQUIPMENT BASES AND SUPPORTS

A. Provide housekeeping pads of concrete, minimum 3-1/2 inches thick and extending 6 inches beyond supported equipment. Refer to Section 03 30 00.

B. Using templates furnished with equipment, install anchor bolts, and accessories for mounting and anchoring equipment.

C. Construct supports of steel members, formed steel channel and steel pipe and fittings. Brace and fasten with flanges bolted to structure.

D. Provide rigid anchors for pipes after vibration isolation components are installed. Refer to Section 21 05 48.

3.4 INSTALLATION - FLASHING

A. Provide flexible flashing and metal counterflashing where piping and ductwork penetrate weather or waterproofed walls, floors, and roofs.

B. Provide acoustical lead flashing around ducts and pipes penetrating equipment rooms for sound control.

C. Provide curbs for roof installations 8 inches minimum high above roofing surface. Flash and counter-flash with sheet metal; seal watertight. Attach counterflashing to equipment and lap base flashing on roof curbs. Flatten and solder joints.

D. Adjust storm collars tight to pipe with bolts; caulk around top edge. Use storm collars above roof jacks. Screw vertical flange section to face of curb.

3.5 INSTALLATION - SLEEVES

A. Exterior watertight entries: Seal with mechanical sleeve seals.

B. Set sleeves in position in forms. Provide reinforcing around sleeves.

C. Size sleeves large enough to allow for movement due to expansion and contraction. Provide for continuous insulation wrapping.

D. Extend sleeves through floors 1 inch above finished floor level. Caulk sleeves.

E. Where piping or ductwork penetrates floor, ceiling, or wall, close off space between pipe or duct and adjacent work with stuffing, firestopping insulation and caulk airtight. Provide close fitting metal collar or escutcheon covers at both sides of penetration.

F. Install chrome plated steel escutcheons at finished surfaces.

3.6 FIELD QUALITY CONTROL

A. Section 01 43 00 - Quality Assurance, Section 01 73 00 – Execution Requirements and Section 01 77 00 – Closeout Requirements. Field inspecting, testing, adjusting, and balancing.

B. Inspect installed firestopping for compliance with specifications and submitted schedule.

3.7 CLEANING

A. Section 01 73 00 – Execution Requirements and Section 01 77 00 – Closeout Requirements: Requirements for cleaning.

3.8 PROTECTION OF FINISHED WORK

A. Section 01 73 00 – Execution Requirements and Section 01 77 00 – Closeout Requirements: Requirements for protecting finished Work.

B. Protect adjacent surfaces from damage by material installation.

3.9 SCHEDULES

A. Maximum Copper and Steel Pipe Hanger Spacing:

PIPE SIZE Inches	COPPER TUBING MAXIMUM HANGER SPACING Feet	STEEL PIPE MAXIMUM HANGER SPACING Feet	COPPER TUBING HANGER ROD DIAMETER Inches	STEEL PIPE HANGER ROD DIAMETER Inches
1/2	5	7	3/8	3/8
3/4	5	7	3/8	3/8
1	6	7	3/8	3/8
1-1/4	7	7	3/8	3/8
1-1/2	8	9	3/8	3/8
2	8	10	3/8	3/8
2-1/2 (Note 2)	9	11	1/2	1/2
3	10	12	1/2	1/2
4	12	14	1/2	5/8
5	13	16	1/2	5/8
6	14	17	5/8	3/4
8	16	19	3/4	3/4
10	18	22	3/4	7/8
12	19	23	3/4	7/8
14	22	25	7/8	1
16	23	27	7/8	1
18	25	28	1	1
20	27	30	1	1-1/4
24	28	32	1-1/4	1-1/4

B. Maximum Plastic and Ductile Iron Pipe Hanger Spacing:

PIPE MATERIAL	MAXIMUM HANGER SPACING Feet	HANGER ROD DIAMETER Inches
ABS (All sizes)	4	3/8
FRP (All Sizes)	4	3/8

Ductile Iron (Note 2)		
PVC (All Sizes)	4	3/8

C. Note 1: Refer to manufacturer's recommendations for grooved end piping systems.

D. Note 2: 20 feet maximum spacing, minimum of one hanger for each pipe section close to joint behind bell. Provide hanger at each change of direction and each branch connection. For pipe sizes 6 inches and smaller, subjected to loadings other than weight of pipe and contents, limit span to maximum spacing for water service steel pipe.

3.10 SEISMIC BRACING

A. Provide seismic bracing of pipe, ductwork and equipment for SMACNA Seismic Restraint Manual Guidelines in accordance with CBC, and ASCE requirements. See Contractor Drawings for additional details.

END OF SECTION

SECTION 23 05 48

VIBRATION AND SEISMIC CONTROLS FOR HVAC PIPING AND EQUIPMENT

PART 1 - GENERAL

1.1 SUMMARY

A. Section Includes:

1. Inertia bases.
2. Vibration isolators.
3. Ductwork lagging.

B. Related Sections:

1. Section 03 30 00 - Cast-In-Place Concrete: Product requirements for concrete for placement by this section.
2. Section 07 92 00 - Joint Sealant: Product requirements for joint sealers specified for placement by this section.
3. Section 08 91 00 - Louvers: Product requirements for acoustic wall louvers.
4. Section 23 05 29 - Hangers and Supports for HVAC Piping and Equipment: Product requirements for pipe hangers and supports.
5. Section 23 05 93 - Testing, Adjusting, and Balancing for HVAC: Requirements for sound and vibration measurements performed independent of this section.
6. Section 23 33 00 - Air Duct Accessories: Product requirements for both solid and flexible duct connectors for duct silencers specified for placement by this section.

1.2 REFERENCES

A. Air Movement and Control Association International, Inc.:

1. AMCA 300 - Reverberant Room Method for Sound Testing of Fans.

B. American National Standards Institute:

1. ANSI S1.4 - Sound Level Meters.
2. ANSI S1.8 - Reference Quantities for Acoustical Levels.
3. ANSI S1.13 - Methods for the Measurement of Sound Pressure Levels in Air.
4. ANSI S12.36 - Survey Methods for the Determination of Sound Power Levels of Noise Sources.

C. Air-Conditioning and Refrigeration Institute:

1. ARI 575 - Method of Measuring Machinery Sound within Equipment Space.

D. American Society of Heating, Refrigerating and:

1. ASHRAE 68 - Laboratory Method of Testing In-Duct Sound Power Measurement Procedure for Fans.
2. ASHRAE Handbook - HVAC Applications.

E. ASTM International:

1. ASTM E90 - Standard Test Method for Laboratory Measurement of Airborne Sound Transmission Loss of Building Partitions and Elements.
2. ASTM E477 - Standard Test Method for Measuring Acoustical and Airflow Performance of Duct Liner Materials and Prefabricated Silencers.
3. ASTM E596 - Standard Test Method for Laboratory Measurement of the Noise Reduction of Sound-Isolating Enclosures.

F. Sheet Metal and Air Conditioning Contractors':

1. SMACNA - HVAC Duct Construction Standard - Metal and Flexible.

1.3 PERFORMANCE REQUIREMENTS

A. Provide vibration isolation on motor driven equipment over 0.5 hp, plus connected piping and ductwork.

B. Provide minimum static deflection of isolators for equipment as follows:

1. Upper Floors, Normal

a. Under 400 rpm: Per manufacturer.
b. 400 - 600 rpm: 3.5 inch
c. 600 - 800 rpm: 2 inch
d. 800 - 900 rpm: 1 inch
e. 1100 - 1500 rpm: 0.5 inch
f. Over 1500 rpm: 0.2 inch

C. Consider upper floor locations critical unless otherwise indicated.

D. Maintain sound level of spaces at levels not to exceed those listed below by utilizing acoustical devices.

E. Maintain rooms at following maximum sound levels, in Noise Criteria (NC), Room Criteria (RC) as defined by ASHRAE Handbook., HVAC Applications.

1. Offices

a. Executive: 30
b. Conference rooms: 30
c. Private: 35
d. Open-plan areas: 40
e. Computer/business machine areas: 45
f. Public circulation: 45

2. Schools

a. Lecture and classrooms: 25
b. Open-plan classrooms: 30

3. Meeting Rooms/Public Assembly: 35

1.4 SUBMITTALS

A. Section 01 33 00 - Submittal Procedures: Submittal procedures.

B. Shop Drawings: Indicate and locate vibration isolators, with static and dynamic load on each. Indicate assembly, materials, thickness, dimensional data, pressure losses, acoustical performance, layout, and connection details for sound attenuation products fabricated for this project.

C. Product Data: Submit schedule of vibration isolator type with location and load on each. Submit catalog information indicating, materials, dimensional data, pressure losses, and acoustical performance for standard sound attenuation products.

D. Design Data: Submit calculations indicating maximum room sound levels are not exceeded.

E. Manufacturer's Installation Instructions: Submit special procedures and setting dimensions. Indicate installation requirements maintaining integrity of sound isolation.

F. Manufacturer's Certificate: Certify isolators meet or exceed specified requirements.

G. Manufacturer's Field Reports: Indicate sound isolation installation is complete and in accordance with instructions.

1.5 CLOSEOUT SUBMITTALS

A. Section 01 73 00 – Execution Requirements and Section 01 77 00 – Closeout Requirements: Closeout procedures.

B. Project Record Documents: Record actual locations of cross-talk silencers, acoustic housings, ductwork lagging.

1.6 QUALITY ASSURANCE

A. Perform Work in accordance with AMCA 300, ANSI S1.13, ARI 575, ANSI S12.36, standards and recommendations of ASHRAE 68.

B. Maintain one copy of each document on site.

1.7 QUALIFICATIONS

A. Manufacturer: Company specializing in manufacturing products specified in this section with minimum five years documented experience.

B. Installer: Company specializing in performing Work of this section with minimum five years documented experience.

1.8 PRE-INSTALLATION MEETINGS

A. Section 01 31 00 – Project Management and Coordination: Pre-installation meeting.

1.9 FIELD MEASUREMENTS

A. Verify field measurements prior to fabrication.

1.10 WARRANTY

A. Section 01 73 00 – Execution Requirements and Section 01 77 00 – Closeout Requirements: Product warranties and product bonds.

B. Furnish five year manufacturer warranty for inertia bases.

PART 2 - PRODUCTS

2.1 VIBRATION ISOLATORS

A. Manufacturers:

1. MW Sausee.
2. Approved equal.
3. Substitutions: Section 01 61 00 - Product Requirements.

B. Open Spring Isolators:

1. Spring Isolators:

a. For Exterior and Humid Areas: Furnish hot dipped galvanized housings and neoprene coated springs.
b. Code: Color code springs for load carrying capacity.

2. Springs: Minimum horizontal stiffness equal to 75 percent vertical stiffness, with working deflection between 0.3 and 0.6 of maximum deflection.
3. Spring Mounts: Furnish with leveling devices, minimum 0.25 inch thick neoprene sound pads, and zinc chromate plated hardware.
4. Sound Pads: Size for minimum deflection of 0.05 inch; meet requirements for neoprene pad isolators.

C. Restrained Spring Isolators:

1. Spring Isolators:

a. For Exterior and Humid Areas: Furnish hot dipped galvanized housings and neoprene coated springs.
b. Code: Color code springs for load carrying capacity.

2. Springs: Minimum horizontal stiffness equal to 75 percent vertical stiffness, with working deflection between 0.3 and 0.6 of maximum deflection.
3. Spring Mounts: Furnish with leveling devices, minimum 0.25 inch thick neoprene sound pads, and zinc chromate plated hardware.
4. Sound Pads: Size for minimum deflection of 0.05 inch; meet requirements for neoprene pad isolators.
5. Restraint: Furnish mounting frame and limit stops.

D. Closed Spring Isolators:

1. Spring Isolators:

    a. For Exterior and Humid Areas: Furnish hot dipped galvanized housings and neoprene coated springs.
    b. Code: Color code springs for load carrying capacity.

2. Type: Closed spring mount with top and bottom housing separated with neoprene rubber stabilizers.
3. Springs: Minimum horizontal stiffness equal to 75 percent vertical stiffness, with working deflection between 0.3 and 0.6 of maximum deflection.
4. Housings: Incorporate neoprene isolation pad meeting requirements for neoprene pad isolators, and neoprene side stabilizers with minimum 0.25 inch clearance.

E. Restrained Closed Spring Isolators:

1. Spring Isolators:

    a. For Exterior and Humid Areas: Furnish hot dipped galvanized housings and neoprene coated springs.
    b. Code: Color code springs for load carrying capacity.

2. Type: Closed spring mount with top and bottom housing separated with neoprene rubber stabilizers.
3. Springs: Minimum horizontal stiffness equal to 75 percent vertical stiffness, with working deflection between 0.3 and 0.6 of maximum deflection.
4. Housings: Incorporate neoprene isolation pad meeting requirements for neoprene pad isolators, and neoprene side stabilizers with minimum 0.25 inch clearance and limit stops.

F. Spring Hanger:

1. Spring Isolators:

    a. For Exterior and Humid Areas: Furnish hot dipped galvanized housings and neoprene coated springs.
    b. Code: Color code springs for load carrying capacity.

2. Springs: Minimum horizontal stiffness equal to 75 percent vertical stiffness, with working deflection between 0.3 and 0.6 of maximum deflection.
3. Housings: Incorporate rubber hanger with threaded insert.
4. Misalignment: Capable of 20 degree hanger rod misalignment.

G. Neoprene Pad Isolators:

1. Rubber or neoprene-waffle pads.

    a. 30 durometer.
    b. Minimum 1/2 inch thick.

c. Maximum loading 40 psi.
d. Height of ribs: not to exceed 0.7 times width.

H. Rubber Mount or Hanger: Molded rubber designed for 0.5 inches deflection with threaded insert.

I. Glass Fiber Pads: Neoprene jacketed pre-compressed molded glass fiber.

J. Seismic Snubbers:

1. Type: Non-directional and double acting unit consisting of interlocking steel members restrained by neoprene elements.
2. Neoprene Elements: Replaceable, minimum of 0.75 inch thick.
3. Capacity: 4 times load assigned to mount groupings at 0.4 inch deflection.
4. Attachment Points and Fasteners: Capable of withstanding 3 times rated load capacity of seismic snubber.

PART 3 - EXECUTION

3.1 EXAMINATION

A. Section 01 31 00 – Project Management and Coordination: Coordination and project conditions.

B. Verify equipment, ductwork and piping is installed before work in this section is started.

3.2 INSTALLATION

A. Install isolation for motor driven equipment.

B. Adjust equipment level.

C. Install spring hangers without binding.

D. On closed spring isolators, adjust so side stabilizers are clear under normal operating conditions.

E. Prior to making piping connections to equipment with operating weights substantially different from installed weights, block up equipment with temporary shims to final height. When full load is applied, adjust isolators to load to allow shim removal.

F. Support piping connections to isolated equipment resiliently as follows:

1. Up to 4 inch Diameter: First three points of support.
2. 5 to 8 inch Diameter: First four points of support.
3. 10 inch Diameter and Over: First six points of support.
4. Select three hangers closest to vibration source for minimum 1.0 inch static deflection or static deflection of isolated equipment. Select remaining isolators for minimum 1.0 inch static deflection or 1/2 static deflection of isolated equipment.

3.3 FIELD QUALITY CONTROL

A. Section 01 43 00 - Quality Assurance, Section 01 73 00 – Execution Requirements and Section 01 77 00 – Closeout Requirements.

B. Inspect isolated equipment after installation and submit report. Include static deflections.

C. Refer to Section 23 05 93 for sound measurements.

D. Furnish services of testing agency to take noise measurement. Use meters meeting requirements of ANSI S1.4.

3.4 SCHEDULES

A. See Contract Drawings for requirements.

END OF SECTION

SECTION 23 05 53

IDENTIFICATION FOR HVAC PIPING AND EQUIPMENT

PART 1 - GENERAL

1.1 SUMMARY

A. Section Includes:

1. Nameplates.
2. Tags.
3. Stencils.
4. Pipe markers.
5. Ceiling tacks.
6. Labels.

B. Related Sections:

1. Section 09 90 00 - Painting and Coating: Execution requirements for painting specified by this section.

1.2 REFERENCES

A. American Society of Mechanical Engineers:

1. ASME A13.1 - Scheme for the Identification of Piping Systems.

1.3 SUBMITTALS

A. Section 01 33 00 - Submittal Procedures: Submittal procedures.

B. Product Data: Submit manufacturers catalog literature for each product required.

C. Shop Drawings: Submit list of wording, symbols, letter size, and color coding for mechanical identification and valve chart and schedule, including valve tag number, location, function, and valve manufacturer's name and model number.

D. Samples: Submit two tags, labels, pipe markers and size used on project.

E. Manufacturer's Installation Instructions: Indicate installation instructions, special procedures, and installation.

F. Manufacturer's Certificate: Certify products meet or exceed specified requirements.

1.4 CLOSEOUT SUBMITTALS

A. Section 01 73 00 – Execution Requirements and Section 01 77 00 – Closeout Requirements: Closeout procedures.

B. Project Record Documents: Record actual locations of tagged valves; include valve tag numbers.

1.5 QUALITY ASSURANCE

A. Conform to ASME A13.1 for color scheme for identification of piping systems and accessories.

B. Maintain one copy of each document on site.

1.6 QUALIFICATIONS

A. Manufacturer: Company specializing in manufacturing products specified in this section with minimum five years documented experience.

B. Installer: Company specializing in performing Work of this section with minimum five years documented experience.

1.7 PRE-INSTALLATION MEETINGS

A. Section 01 31 00 – Project Management and Coordination: Pre-installation meeting.

1.8 FIELD MEASUREMENTS

A. Verify field measurements prior to fabrication.

1.9 EXTRA MATERIALS

A. Section 01 73 00 – Execution Requirements and Section 01 77 00 – Closeout Requirements: Spare parts and maintenance products.

PART 2 - PRODUCTS

2.1 NAMEPLATES

A. Manufacturers:

1. Craftmark Identification Systems.
2. Safety Sign Co.
3. Seton Identification Products.

B. Product Description: Laminated three-layer plastic with engraved black letters on light contrasting background color.

2.2 TAGS

A. Plastic Tags:

1. Manufacturers:

a. Craftmark Identification Systems.

b. Safety Sign Co.
c. Seton Identification Products.

2. Laminated three-layer plastic with engraved black letters on light contrasting background color. Tag size minimum 1-1/2 inches diameter.

B. Metal Tags:

1. Manufacturers:

a. Craftmark Identification Systems.
b. Safety Sign Co.
c. Seton Identification Products.

2. Stainless Steel with stamped letters; tag size minimum 1-1/2 inches diameter or square with finished edges.

C. Information Tags:

1. Manufacturers:

a. Craftmark Identification Systems.
b. Safety Sign Co.
c. Seton Identification Products.

2. Clear plastic with printed "Danger," "Caution," or "Warning" and message; size 3-1/4 x 5-5/8 inches with grommet and self-locking nylon ties.

2.3 STENCILS

A. Manufacturers:

1. Craftmark Identification Systems.
2. Safety Sign Co.
3. Seton Identification Products.

B. Stencils: With clean cut symbols and letters of following size:

1. Up to 2 inches Outside Diameter of Insulation or Pipe: 1/2 inch high letters.
2. 2-1/2 to 6 inches Outside Diameter of Insulation or Pipe: 1-inch high letters.
3. Over 6 inches Outside Diameter of Insulation or Pipe: 1-3/4 inches high letters.
4. Ductwork and Equipment: 1-3/4 inches high letters.

C. Stencil Paint: As specified in Section 09 90 00, semi-gloss enamel, colors and lettering size conforming to ASME A13.1.

2.4 PIPE MARKERS

A. Color and Lettering: Conform to ASME A13.1.

B. Plastic Pipe Markers:

1. Manufacturers:

    a. Craftmark Identification Systems.
    b. Safety Sign Co.
    c. Seton Identification Products.

2. Factory fabricated, flexible, semi-rigid plastic, preformed to fit around pipe or pipe covering. Larger sizes may have maximum sheet size with spring fastener.

C. Plastic Tape Pipe Markers:

1. Manufacturers:

    a. Craftmark Identification Systems.
    b. Safety Sign Co.
    c. Seton Identification Products.

2. Flexible, vinyl film tape with pressure sensitive adhesive backing and printed markings.

2.5 CEILING TACKS

A. Manufacturers:

1. Craftmark Identification Systems.
2. Safety Sign Co.
3. Seton Identification Products.

B. Description: Steel with 3/4 inch diameter color-coded head.

C. Color code as follows:

1. HVAC equipment: Yellow.
2. Fire dampers/smoke dampers: Red.
3. Plumbing valves: Green.
4. Heating/cooling valves: Blue.

2.6 LABELS

A. Manufacturers:

1. Craftmark Identification Systems.
2. Safety Sign Co.
3. Seton Identification Products.

B. Description: Laminated Mylar, size 1.9 x 0.75 inches, adhesive backed with printed identification and bar code.

PART 3 - EXECUTION

3.1 PREPARATION

A. Degrease and clean surfaces to receive adhesive for identification materials.

B. Prepare surfaces in accordance with Section 09 90 00 for stencil painting.

3.2 INSTALLATION

A. Apply stencil painting in accordance with Section 09 90 00.

B. Install identifying devices after completion of coverings and painting.

C. Install plastic nameplates with corrosive-resistant mechanical fasteners, or adhesive.

D. Install labels with sufficient adhesive for permanent adhesion and seal with clear lacquer. For unfinished canvas covering, apply paint primer before applying labels.

E. Install tags using corrosion resistant chain. Number tags consecutively by location.

F. Identify air conditioning units, pumps, heaters, heat transfer equipment, tanks, and water treatment devices with plastic nameplates. Identify in-line pumps and other small devices with tags.

G. Identify control panels and major control components outside panels with plastic nameplates.

H. Identify valves in main and branch piping with tags.

I. Identify air terminal units and radiator valves with numbered tags.

J. Tag automatic controls, instruments, and relays. Key to control schematic.

K. Identify piping, concealed or exposed, with plastic pipe markers. Use tags on piping 3/4 inch diameter and smaller. Identify service, flow direction, and pressure. Install in clear view and align with axis of piping. Locate identification not to exceed 20 feet on straight runs including risers and drops, adjacent to each valve and tee, at each side of penetration of structure or enclosure, and at each obstruction.

L. For exposed natural gas lines other than steel pipe, attach yellow pipe labels with "GAS" in black lettering, at maximum 5 foot spacing.

M. Identify ductwork with stenciled painting. Identify with air conditioning unit identification number and area served. Locate identification at air conditioning unit, at each side of penetration of structure or enclosure, and at each obstruction.

N. Provide ceiling tacks to locate valves or dampers above T-bar type panel ceilings. Locate in corner of panel closest to equipment.

3.3 SCHEDULES

A. Identification: Shall be per ANSI Standard.

END OF SECTION

SECTION 23 05 93

TESTING, ADJUSTING, AND BALANCING FOR HVAC

PART 1 - GENERAL

1.1 SUMMARY

A. Section Includes:

1. Testing adjusting and balancing of air systems.
2. Testing adjusting and balancing of hydronic systems.
3. Measurement of final operating condition of HVAC systems.
4. Sound measurement of equipment operating conditions.
5. Vibration measurement of equipment operating conditions.
6. Verification of fire/smoke damper operation.

1.2 REFERENCES

A. Associated Air Balance Council:

1. AABC MN-1 - National Standards for Testing and Balancing Heating, Ventilating, and Air Conditioning Systems.

B. American Society of Heating, Refrigerating and Air-Conditioning Engineers:

1. ASHRAE 111 - Practices for Measurement, Testing, Adjusting and Balancing of Building Heating, Ventilation, Air-Conditioning and Refrigeration Systems.

C. Natural Environmental Balancing Bureau:

1. NEBB - Procedural Standards for Testing, Adjusting, and Balancing of Environmental Systems.

1.3 SUBMITTALS

A. Section 01 33 00 - Submittal Procedures: Submittal procedures.

B. Prior to commencing Work, submit proof of latest calibration date of each instrument.

C. Test Reports: Indicate data on AABC MN-1 National Standards for Total System Balance forms.

D. Field Reports: Indicate deficiencies preventing proper testing, adjusting, and balancing of systems and equipment to achieve specified performance.

E. Prior to commencing Work, submit report forms or outlines indicating adjusting, balancing, and equipment data required. Include detailed procedures, agenda, sample report forms and copy of AABC National Project Performance Guaranty.

F. Submit draft copies of report for review prior to final acceptance of Project.

G. Furnish reports in soft cover, letter size, 3-ring binder manuals, complete with table of contents page and indexing tabs, with cover identification at front and side. Include set of reduced drawings with air outlets and equipment identified to correspond with data sheets and indicating thermostat locations.

1.4 CLOSEOUT SUBMITTALS

A. Section 01 73 00 – Execution Requirements and Section 01 77 00 – Closeout Requirements: Closeout procedures.

B. Project Record Documents: Record actual locations of flow measuring stations of balancing valves and rough setting.

C. Operation and Maintenance Data: Furnish final copy of testing, adjusting, and balancing report inclusion in operating and maintenance manuals.

1.5 QUALITY ASSURANCE

A. Perform Work in accordance with AABC MN-1 National Standards for Field Measurement and Instrumentation, Total System Balance.

B. Maintain one copy of each document on site.

C. Prior to commencing Work, calibrate each instrument to be used.

1.6 QUALIFICATIONS

A. Agency: Company specializing in testing, adjusting, and balancing of systems specified in this section with minimum years documented experience certified by AABC.

B. Perform Work under supervision of AABC Certified Test and Balance Engineer.

1.7 PRE-INSTALLATION MEETINGS

A. Section 01 31 00 – Project Management and Coordination: Pre-installation meeting.

1.8 SEQUENCING

A. Section 01 11 00 - Summary: Work sequence.

B. Sequence balancing between completion of systems tested and Date of Substantial Completion.

1.9 SCHEDULING

A. Section 01 31 00 – Project Management and Coordination: Coordination and project conditions.

B. Schedule and provide assistance in final adjustment and test of life safety system with Fire Authority.

PART 2 - PRODUCTS (NOT APPLICABLE)

PART 3 - EXECUTION

3.1 EXAMINATION

A. Section 01 31 00 – Project Management and Coordination: Coordination and project conditions.

B. Verify systems are complete and operable before commencing work. Verify the following:

1. Systems are started and operating in safe and normal condition.
2. Temperature control systems are installed complete and operable.
3. Proper thermal overload protection is in place for electrical equipment.
4. Final filters are clean and in place. If required, install temporary media in addition to final filters.
5. Duct systems are clean of debris.
6. Fans are rotating correctly.
7. Fire and volume dampers are in place and open.
8. Air coil fins are cleaned and combed.
9. Access doors are closed and duct end caps are in place.
10. Air outlets are installed and connected.
11. Duct system leakage is minimized.
12. Hydronic systems are flushed, filled, and vented.
13. Pumps are rotating correctly.
14. Proper strainer baskets are clean and in place or in normal position.
15. Service and balancing valves are open.

3.2 PREPARATION

A. Furnish instruments required for testing, adjusting, and balancing operations.

B. Make instruments available to Architect/Engineer to facilitate spot checks during testing.

3.3 INSTALLATION TOLERANCES

A. Air Conditioning Systems: Adjust to within plus or minus 5 percent of design.

B. Air Outlets and Inlets: Adjust total to within plus 5 percent and minus 5 percent of design to space. Adjust outlets and inlets in space to within plus or minus 10 percent of design.

C. Hydronic Systems: Adjust to within plus or minus 10 percent of design.

3.4 ADJUSTING

A. Section 01 73 00 – Execution Requirements and Section 01 77 00 – Closeout Requirements: Testing, adjusting, and balancing.

B. Verify recorded data represents actual measured or observed conditions.

C. Permanently mark settings of valves, dampers, and other adjustment devices allowing settings to be restored. Set and lock memory stops.

D. After adjustment, take measurements to verify balance has not been disrupted. If disrupted, verify correcting adjustments have been made.

E. Report defects and deficiencies noted during performance of services, preventing system balance.

F. Leave systems in proper working order, replacing belt guards, closing access doors, closing doors to electrical switch boxes, and restoring thermostats to specified settings.

G. At final inspection, recheck random selections of data recorded in report. Recheck points or areas as selected and witnessed by Owner.

H. Check and adjust systems approximately six months after final acceptance and submit report.

3.5 AIR SYSTEM PROCEDURE

A. Adjust air conditioning and distribution systems to obtain required or design supply, return, and exhaust air quantities.

B. Make air quantity measurements in main ducts by Pitot tube traverse of entire cross sectional area of duct.

C. Measure air quantities at air inlets and outlets.

D. Adjust distribution system to obtain uniform space temperatures free from objectionable drafts.

E. Use volume control devices to regulate air quantities only to extent adjustments do not create objectionable air motion or sound levels. Effect volume control by using volume dampers located in ducts.

F. Vary total system air quantities by adjustment of fan speeds. Provide sheave drive changes to vary fan speed. Vary branch air quantities by damper regulation.

G. Provide system schematic with required and actual air quantities recorded at each outlet or inlet.

H. Measure static air pressure conditions on air supply units, including filter and coil pressure drops, and total pressure across fan. Make allowances for 50 percent loading of filters.

I. Adjust outside air automatic dampers, outside air, return air, and exhaust dampers for design conditions.

J. Measure temperature conditions across outside air, return air, and exhaust dampers to check leakage.

K. At modulating damper locations, take measurements and balance at extreme conditions. Balance variable volume systems at maximum airflow rate, full cooling, and at minimum airflow rate, full heating.

L. Measure building static pressure and adjust supply, return, and exhaust air systems to obtain required relationship between each to maintain approximately 0.05 inches positive static pressure near building entries.

M. For variable air volume system powered units set volume controller to airflow setting indicated. Confirm connections properly made and confirm proper operation for automatic variable-air-volume temperature control.

3.6 WATER SYSTEM PROCEDURE

A. Adjust water systems, after air balancing, to obtain design quantities.

B. Use calibrated Venturi tubes, orifices, or other metered fittings and pressure gauges to determine flow rates for system balance. Where flow-metering devices are not installed, base flow balance on temperature difference across various heat transfer elements in system.

C. Adjust systems to obtain specified pressure drops and flows through heat transfer elements prior to thermal testing. Perform balancing by measurement of temperature differential in conjunction with air balancing.

D. Effect system balance with automatic control valves fully open or in normal position to heat transfer elements.

E. Effect adjustment of water distribution systems by means of balancing cocks, valves, and fittings. Do not use service or shut-off valves for balancing unless indexed for balance point.

F. Where available pump capacity is less than total flow requirements or individual system parts, simulate full flow in one part by temporary restriction of flow to other parts.

3.7 FIRE/SMOKE DAMPERS

A. Provide field verification of fire/smoke damper per code requirement including, but not limited to, the following:

1. Visual confirmation of the complete closure of the dampers when the fire/alarm system is in simulated fire modes and during power simulated power failure.
2. Visual confirmation that the dampers are fully open during normal modes without any unusual noise and vibrations.

3.8 SCHEDULES

A. Equipment Requiring Testing, Adjusting, and Balancing:

1. Plumbing Pumps.
2. HVAC Pumps.
3. Boilers.
4. Air Handling Units.
5. Split System Air Conditioning Systems
6. Computer Room Air Conditioning Units.
7. Fans.
8. Air Filters.
9. Air Terminal Units.
10. Air Inlets and Outlets.

B. Report Forms

1. Title Page:

a. Name of Testing, Adjusting, and Balancing Agency
b. Address of Testing, Adjusting, and Balancing Agency
c. Telephone and facsimile numbers of Testing, Adjusting, and Balancing Agency
d. Project name
e. Project location
f. Project Architect
g. Project Engineer
h. Project Contractor
i. Project altitude
j. Report date

2. Summary Comments:

a. Design versus final performance
b. Notable characteristics of system
c. Description of systems operation sequence
d. Summary of outdoor and exhaust flows to indicate building pressurization
e. Nomenclature used throughout report
f. Test conditions

3. Instrument List:

a. Instrument
b. Manufacturer
c. Model number
d. Serial number
e. Range
f. Calibration date

4. Electric Motors:

a. Manufacturer
b. Model/Frame
c. HP/BHP and kW
d. Phase, voltage, amperage; nameplate, actual, no load
e. RPM
f. Service factor
g. Starter size, rating, heater elements
h. Sheave Make/Size/Bore

5. V-Belt Drive:

a. Identification/location
b. Required driven RPM
c. Driven sheave, diameter and RPM
d. Belt, size and quantity
e. Motor sheave diameter and RPM
f. Center to center distance, maximum, minimum, and actual

6. Pump Data:

a. Identification/number
b. Manufacturer
c. Size/model
d. Impeller
e. Service
f. Design flow rate, pressure drop, BHP and kW
g. Actual flow rate, pressure drop, BHP and kW
h. Discharge pressure
i. Suction pressure
j. Total operating head pressure
k. Shut off, discharge and suction pressures
l. Shut off, total head pressure

7. Combustion Test:

a. Manufacturer
b. Model number
c. Serial number
d. Firing rate
e. Overfire draft
f. Gas meter timing dial size
g. Gas meter time per revolution
h. Gas pressure at meter outlet
i. Gas flow rate
j. Heat input
k. Burner manifold gas pressure
l. Percent carbon monoxide (CO)
m. Percent carbon dioxide (CO2)
n. Percent oxygen (O2)
o. Percent excess air
p. Flue gas temperature at outlet

q. Ambient temperature
r. Net stack temperature
s. Percent stack loss
t. Percent combustion efficiency
u. Heat output

8. Air Moving Equipment:

a. Location
b. Manufacturer
c. Model number
d. Serial number
e. Arrangement/Class/Discharge
f. Air flow, specified and actual
g. Return air flow, specified and actual
h. Outside air flow, specified and actual
i. Total static pressure (total external), specified and actual
j. Inlet pressure
k. Discharge pressure
l. Sheave Make/Size/Bore
m. Number of Belts/Make/Size
n. Fan RPM

9. Return Air/Outside Air Data:

a. Identification/location
b. Design air flow
c. Actual air flow
d. Design return air flow
e. Actual return air flow
f. Design outside air flow
g. Actual outside air flow
h. Return air temperature
i. Outside air temperature
j. Required mixed air temperature
k. Actual mixed air temperature
l. Design outside/return air ratio
m. Actual outside/return air ratio

10. Exhaust Fan Data:

a. Location
b. Manufacturer
c. Model number
d. Serial number
e. Air flow, specified and actual
f. Total static pressure (total external), specified and actual
g. Inlet pressure
h. Discharge pressure
i. Sheave Make/Size/Bore
j. Number of Belts/Make/Size

k. Fan RPM

11. Duct Traverse:

    a. System zone/branch
    b. Duct size
    c. Area
    d. Design velocity
    e. Design air flow
    f. Test velocity
    g. Test air flow
    h. Duct static pressure
    i. Air temperature
    j. Air correction factor

12. Duct Leak Test:

    a. Description of ductwork under test
    b. Duct design operating pressure
    c. Duct design test static pressure
    d. Duct capacity, air flow
    e. Maximum allowable leakage duct capacity times leak factor
    f. Test apparatus

        1) Blower
        2) Orifice, tube size
        3) Orifice size
        4) Calibrated

    g. Test static pressure
    h. Test orifice differential pressure
    i. Leakage

13. Air Monitoring Station Data:

    a. Identification/location
    b. System
    c. Size
    d. Area
    e. Design velocity
    f. Design air flow
    g. Test velocity
    h. Test air flow

14. Flow Measuring Station:

    a. Identification/number
    b. Location
    c. Size
    d. Manufacturer
    e. Model number

f. Serial number
g. Design Flow rate
h. Design pressure drop
i. Actual/final pressure drop
j. Actual/final flow rate
k. Station calibrated setting

15. Terminal Unit Data:

a. Manufacturer
b. Type, constant, variable, single, dual duct
c. Identification/number
d. Location
e. Model number
f. Size
g. Minimum static pressure
h. Minimum design air flow
i. Maximum design air flow
j. Maximum actual air flow
k. Inlet static pressure

16. Air Distribution Test Sheet:

a. Air terminal number
b. Room number/location
c. Terminal type
d. Terminal size
e. Area factor
f. Design velocity
g. Design air flow
h. Test (final) velocity
i. Test (final) air flow
j. Percent of design air flow

END OF SECTION

SECTION 23 07 00

HVAC INSULATION

PART 1 - GENERAL

1.1 SUMMARY

A. Section Includes:

1. HVAC piping insulation, jackets and accessories.
2. HVAC equipment insulation, jackets and accessories.
3. HVAC ductwork insulation, jackets, and accessories.

B. Related Sections:

1. Section 07 84 00 - Firestopping: Product requirements for firestopping for placement by this section.
2. Section 09 90 00 - Painting and Coating: Execution requirements for painting insulation jackets and covering specified by this section.

1.2 REFERENCES

A. ASTM International:

1. ASTM C195 - Standard Specification for Mineral Fiber Thermal Insulating Cement.
2. ASTM C449/C449M - Standard Specification for Mineral Fiber Hydraulic-Setting Thermal Insulating and Finishing Cement.
3. ASTM C450 - Standard Practice for Fabrication of Thermal Insulating Fitting Covers for NPS Piping, and Vessel Lagging.
4. ASTM C533 - Standard Specification for Calcium Silicate Block and Pipe Thermal Insulation.
5. ASTM C534 - Standard Specification for Preformed Flexible Elastomeric Cellular Thermal Insulation in Sheet and Tubular Form.
6. ASTM C547 - Standard Specification for Mineral Fiber Pipe Insulation.
7. ASTM C553 - Standard Specification for Mineral Fiber Blanket Thermal Insulation for Commercial and Industrial Applications.
8. ASTM C578 - Standard Specification for Rigid, Cellular Polystyrene Thermal Insulation.
9. ASTM C585 - Standard Practice for Inner and Outer Diameters of Rigid Thermal Insulation for Nominal Sizes of Pipe and Tubing (NPS System).
10. ASTM C591 - Standard Specification for Unfaced Preformed Rigid Cellular Polyisocyanurate Thermal Insulation.
11. ASTM C612 - Standard Specification for Mineral Fiber Block and Board Thermal Insulation.
12. ASTM C921 - Standard Practice for Determining the Properties of Jacketing Materials for Thermal Insulation.
13. ASTM C1071 - Standard Specification for Thermal and Acoustical Insulation (Glass Fiber, Duct Lining Material).

14. ASTM C1136 - Standard Specification for Flexible, Low Permeance Vapor Retarders for Thermal Insulation.
15. ASTM C1290 - Standard Specification for Flexible Fibrous Glass Blanket Insulation Used to Externally Insulate HVAC Ducts.
16. ASTM D1785 - Standard Specification for Rigid Poly (Vinyl Chloride) (PVC) Compounds and Chlorinated Poly (Vinyl Chloride) (CPVC) Compounds.
17. ASTM D4637 - Standard Specification for EPDM Sheet Used in Single-Ply Roof Membrane.
18. ASTM E96/E96M - Standard Test Methods for Water Vapor Transmission of Materials.
19. ASTM E162 - Standard Test Method for Surface Flammability of Materials Using a Radiant Heat Energy Source.

B. Sheet Metal and Air Conditioning Contractors':

1. SMACNA - HVAC Duct Construction Standard - Metal and Flexible.

C. Underwriters Laboratories Inc.:

1. UL 1978 - Standard for Safety for Grease Ducts.

1.3 SUBMITTALS

A. Section 01 33 00 - Submittal Procedures: Submittal procedures.

B. Product Data: Submit product description, thermal characteristics and list of materials and thickness for each service, and location.

C. Samples: Submit two samples of representative size illustrating each insulation type.

D. Manufacturer's Installation Instructions: Submit manufacturers published literature indicating proper installation procedures.

E. Manufacturer's Certificate: Certify products meet or exceed specified requirements.

1.4 QUALITY ASSURANCE

A. Test pipe insulation for maximum flame spread index of 25 and maximum smoke developed index of not exceeding 5 in accordance with ASTM E84.

B. Pipe insulation manufactured in accordance with ASTM C585 for inner and outer diameters.

C. Factory fabricated fitting covers manufactured in accordance with ASTM C450.

D. Duct insulation, Coverings, and Linings: Maximum 25/50 flame spread/smoke developed index, when tested in accordance with ASTM E84, using specimen procedures and mounting procedures of ASTM E 2231.

1.5 QUALIFICATIONS

A. Manufacturer: Company specializing in manufacturing products specified in this section with minimum five years documented experience.

B. Applicator: Company specializing in performing Work of this section with minimum five years documented experience.

1.6 PRE-INSTALLATION MEETINGS

A. Section 01 31 00 – Project Management and Coordination: Pre-installation meeting.

1.7 DELIVERY, STORAGE, AND HANDLING

A. Section 01 61 00 - Product Requirements: Requirements for transporting, handling, storing, and protecting products.

B. Accept materials on site in original factory packaging, labeled with manufacturer's identification, including product density and thickness.

C. Protect insulation from weather and construction traffic, dirt, water, chemical, and damage, by storing in original wrapping.

1.8 ENVIRONMENTAL REQUIREMENTS

A. Section 01 61 00 - Product Requirements: Environmental conditions affecting products on site.

B. Install insulation only when ambient temperature and humidity conditions are within range recommended by manufacturer.

1.9 FIELD MEASUREMENTS

A. Verify field measurements prior to fabrication.

1.10 WARRANTY

A. Section 01 73 00 – Execution Requirements and Section 01 77 00 – Closeout Requirements: Product warranties and product bonds.

PART 2 - PRODUCTS

2.1 MANUFACTURER

A. Manufacturers for Glass Fiber and Mineral Fiber Insulation Products:

1. CertainTeed.
2. Knauf.
3. Johns Manville.
4. Owens-Corning.

B. Manufacturers for Closed Cell Elastomeric Insulation Products:

1. Aeroflex. Aerocell.
2. Armacell, LLC. Armaflex.
3. Nomaco. K-flex.

C. Manufacturers for Polyisocyanurate Foam Insulation Products:

1. Dow Chemical Company.
2. Substitutions: Section 01 60 00 - Product Requirements.

D. Manufacturers for Extruded Polystyrene Insulation Products:

1. Dow Chemical Company.
2. Substitutions: Section 01 61 00 - Product Requirements.

2.2 PIPE INSULATION

A. TYPE P-1: ASTM C547, molded glass fiber pipe insulation.

1. Thermal Conductivity: 0.23 at 75 degrees F.
2. Operating Temperature Range: 0 to 850 degrees F.
3. Vapor Barrier Jacket: ASTM C1136, Type I, factory applied reinforced foil kraft with self-sealing adhesive joints.
4. Jacket Temperature Limit: minus 20 to 150 degrees F.

B. TYPE P-2: ASTM C547, molded glass fiber pipe insulation.

1. Thermal Conductivity: 0.23 at 75 degrees F.
2. Operating Temperature Range: 0 to 850 degrees F.

C. TYPE P-3: ASTM C612; semi-rigid, fibrous glass board noncombustible, end grain adhered to jacket.

1. Thermal Conductivity: 0.27 at 75 degrees F.
2. Operating Temperature Range: 0 to 650 degrees F.
3. Vapor Barrier Jacket: ASTM C1136, Type II, factory applied reinforced foil kraft with self-sealing adhesive joints.
4. Jacket Temperature Limit: minus 20 to 150 degrees F.

D. TYPE P-4: ASTM C612; semi-rigid, fibrous glass board noncombustible.

1. Thermal Conductivity: 0.27 at 75 degrees F.
2. Operating Temperature Range: 0 to 650 degrees F.

E. TYPE P-5: ASTM C534, Type I, flexible, closed cell elastomeric insulation, tubular.

1. Thermal Conductivity: 0.27 at 75 degrees F.
2. Operating Temperature Range: Range: Minus 70 to 180 degrees F.

F. TYPE P-6: ASTM C534, Type I, flexible, closed cell elastomeric insulation, tubular.

1. Thermal Conductivity: 0.30 at 75 degrees F.
2. Maximum Service Temperature: 300 degrees F.
3. Operating Temperature Range: Range: Minus 58 to 300 degrees F.

G. TYPE P-7: ASTM C534, Type I, flexible, nonhalogen, closed cell elastomeric insulation, tubular.

1. Thermal Conductivity: 0.27 at 75 degrees F.
2. Maximum Service Temperature: 250 degrees F.
3. Operating Temperature Range: Range: Minus 58 to 250 degrees F.

H. TYPE P-8: ASTM C547, Type I or II, mineral fiber preformed pipe insulation, noncombustible.

1. Thermal Conductivity: 0.23 at 75 degrees F.
2. Maximum Service Temperature: 1200 degrees F.
3. Canvas Jacket: UL listed, 6 oz/sq yd, plain weave cotton fabric treated with fire retardant lagging adhesive.

I. TYPE P-11: ASTM C533; Type I, hydrous calcium silicate pipe insulation, rigid molded white; asbestos free.

1. Thermal Conductivity: 0.45 at 200 degrees F.
2. Operating Temperature Range: 140 to 1200 degrees F.

2.3 PIPE INSULATION JACKETS

A. Vapor Retarder Jacket:

1. ASTM C921, white Kraft paper with glass fiber yarn, bonded to aluminized film.
2. Water Vapor Permeance: ASTM E96/E96M; 0.02 perms.

B. PVC Plastic Pipe Jacket:

1. Product Description: ASTM D1785, One piece molded type fitting covers and sheet material, off-white color.
2. Thickness: 10 mil.
3. Connections: Brush on welding adhesive and tacks.

C. ABS Plastic Pipe Jacket:

1. Jacket: One piece molded type fitting covers and sheet material, off-white color.
2. Minimum service temperature: 0 degrees F.
3. Maximum service temperature of 180 degrees F.
4. Water Vapor Permeance: ASTM E96/E96M; 0.02 perms.
5. Thickness: 30 mil.
6. Connections: Brush on welding adhesive.

D. Aluminum Pipe Jacket:

1. ASTM B209.

2. Thickness: 0.025 inch thick sheet.
3. Finish: Smooth.
4. Joining: Longitudinal slip joints and 2 inch laps with caulking.
5. Fittings: 0.025 inch thick die shaped fitting covers with factory attached protective liner.
6. Metal Jacket Bands: 1/2 inch wide; 0.010 inch thick stainless steel.

2.4 PIPE INSULATION ACCESSORIES

A. Vapor Retarder Lap Adhesive: Compatible with insulation.

B. Covering Adhesive Mastic: Compatible with insulation.

C. Piping 1-1/2 inches diameter and smaller: Galvanized steel insulation protection shield. MSS SP-69, Type 40. Length: Based on pipe size and insulation thickness.

D. Piping 2 inches diameter and larger: Wood insulation saddle, hard maple. Inserts length: not less than 6 inches long, matching thickness and contour of adjoining insulation.

E. Closed Cell Elastomeric Insulation Pipe Hanger: Polyurethane insert with stainless steel jacket single piece construction with self-adhesive closure. Thickness to match pipe insulation.

F. Tie Wire: 0.048 inch stainless steel with twisted ends on maximum 12 inch centers.

G. Mineral Fiber Hydraulic-Setting Thermal Insulating and Finishing Cement: ASTM C449/C449M.

H. Insulating Cement: ASTM C195; hydraulic setting on mineral wool.

I. Adhesives: Compatible with insulation.

2.5 EQUIPMENT INSULATION

A. TYPE E-1: ASTM C553; glass fiber, flexible or semi-rigid, noncombustible.

1. Thermal Conductivity: 0.24 at 75 degrees F.
2. Operating Temperature Range: 0 to 450 degrees F.
3. Density: 1.5 pound per cubic foot.

B. TYPE E-2: ASTM C612; glass fiber, rigid board, noncombustible with factory applied kraft reinforced aluminum foil jacket.

1. Thermal Conductivity: 0.24 at 75 degrees F.
2. Operating Temperature Range: 0 to 450 degrees F.
3. Density: 3.0 pound per cubic foot.
4. Jacket Temperature Limit: minus 20 to 150 degrees F.

C. TYPE E-3: ASTM C612; semi-rigid, fibrous glass board noncombustible, end grain adhered to jacket.

1. Thermal Conductivity: 0.27 at 75 degrees F.
2. Operating Temperature Range: 0 to 650 degrees F.
3. Vapor Barrier Jacket: ASTM C1136, Type II, factory applied reinforced foil kraft with self-sealing adhesive joints.
4. Jacket Temperature Limit: minus 20 to 150 degrees F.

D. TYPE E-4: ASTM C612; semi-rigid, fibrous glass board noncombustible.

1. Thermal Conductivity: 0.27 at 75 degrees F.
2. Operating Temperature Range: 0 to 650 degrees F.

E. TYPE E-5: ASTM C612; glass fiber, semi-rigid board, noncombustible.

1. Thermal Conductivity: 0.23 at 75 degrees F.
2. Maximum Operating Temperature: 850 degrees F.
3. Density: 3.0 pound per cubic foot.

F. TYPE E-6: ASTM C553; mineral fiber blanket, Type I.

1. Thermal Conductivity: 0.27 at 75 degrees F.
2. Maximum Operating Temperature: 1000 degrees F.
3. Density: 1.0 pound per cubic foot.

G. TYPE E-7: ASTM C533; Type II, hydrous calcium silicate block insulation, asbestos free.

1. Thermal Conductivity: 0.45 at 200 degrees F.
2. Operating Temperature Range: 140 to 1200 degrees F.

H. TYPE E-8: ASTM C534, Type II, flexible, closed cell elastomeric insulation, sheet.

1. Thermal Conductivity: 0.27 at 75 degrees F.
2. Operating Temperature Range: Range: Minus 70 to 220 degrees F.

I. TYPE E-9: ASTM C612, manmade mineral fiber, noncombustible, Classes 1-4.

1. Thermal Conductivity: 0.25 at 100 degrees F.
2. Maximum Service Temperature: 1200 degrees F.
3. Density: 6 pound per cubic foot.

2.6 EQUIPMENT INSULATION JACKETS

A. PVC Plastic Equipment Jacket:

1. Product Description: ASTM D1785, sheet material, off-white color.
2. Minimum Service Temperature: 0 degrees F.
3. Maximum Service Temperature: 150 degrees F.
4. Water Vapor Permeance: ASTM E96/E96M; 0.02 perms.
5. Thickness: 20 mil.
6. Connections: Brush on welding adhesive and tacks.

B. Aluminum Equipment Jacket:

1. ASTM B209 Thickness: 0.025 inch thick sheet.
2. Finish: Smooth.
3. Joining: Longitudinal slip joints and 2 inch laps.
4. Fittings: 0.016 and 0.025 inch thick die shaped fitting covers with factory attached protective liner.
5. Metal Jacket Bands: 3/8 inch wide; 0.010 inch thick stainless steel.

C. Canvas Equipment Jacket: UL listed, 6 oz/sq yd, plain weave cotton fabric with fire retardant lagging adhesive compatible with insulation.

D. Vapor Retarder Jacket:

1. ASTM C921, white Kraft paper with glass fiber yarn, bonded to aluminized film.
2. Water Vapor Permeance: ASTM E96/E96M; 0.02 perms.

2.7 EQUIPMENT INSULATION ACCESSORIES

A. Vapor Retarder Lap Adhesive: Compatible with insulation.

B. Covering Adhesive Mastic: Compatible with insulation.

C. Tie Wire: 0.048 inch stainless steel with twisted ends on maximum 12 inch centers.

D. Mineral Fiber Hydraulic-Setting Thermal Insulating and Finishing Cement: ASTM C449/C449M.

E. Adhesives: Compatible with insulation.

2.8 DUCTWORK INSULATION

A. TYPE D-1: ASTM C1290, Type III, flexible glass fiber, commercial grade with factory applied reinforced aluminum foil jacket meeting ASTM C1136, Type II.

1. Thermal Conductivity: 0.25 at 75 degrees F.
2. Maximum Operating Temperature: 250 degrees F.
3. Density: 1.5 pound per cubic foot.

B. TYPE D-2: ASTM C612, Type IA or IB, rigid glass fiber, with factory applied reinforced aluminum foil facing meeting ASTM C1136, Type II.

1. Thermal Conductivity: 0.22 at 75 degrees F.
2. Density: 3.0 pound per cubic foot.

C. TYPE D-4: ASTM C1071, Type I, flexible, glass fiber duct liner with coated air side.

1. Thermal Conductivity: 0.24 at 75 degrees F.
2. Density: 1.5 pound per cubic foot.
3. Maximum Operating Temperature: 250 degrees F.
4. Maximum Air Velocity: 6,000 feet per minute.

D. TYPE D-5: ASTM C1071, Type II, rigid, glass fiber duct liner with coated air side.

1. Thermal Conductivity: 0.23 at 75 degrees F.
2. Density: 3.0 pound per cubic foot.
3. Maximum Operating Temperature: 250 degrees F.
4. Maximum Air Velocity: 4,000 feet per minute.

2.9 DUCTWORK INSULATION JACKETS

A. Exterior Ductwork: Provide dual wall ductwork with specified insulation per Section 23 32 100.

B. Vapor Retarder Jacket:

1. Kraft paper with glass fiber yarn and bonded to aluminized film.
2. Water Vapor Permeance: ASTM E96/E96M; 0.02 perms.
3. Secure with pressure sensitive tape.

C. Canvas Duct Jacket: UL listed, 6 oz/sq yd, plain weave cotton fabric with fire retardant lagging adhesive compatible with insulation.

2.10 DUCTWORK INSULATION ACCESSORIES

A. Vapor Retarder Tape: Kraft paper reinforced with glass fiber yarn and bonded to aluminized film, with pressure sensitive rubber based adhesive.

B. Vapor Retarder Lap Adhesive: Compatible with insulation.

C. Adhesive: Waterproof, ASTM E162 fire-retardant type.

D. Liner Fasteners: Galvanized steel, welded with press-on head.

E. Tie Wire: 0.048 inch stainless steel with twisted ends on maximum 12 inch centers.

F. Lagging Adhesive: Fire retardant type with maximum 25/450 flame spread/smoke developed index when tested in accordance with ASTM E84.

G. Impale Anchors: Galvanized steel, 12 gage self-adhesive pad.

H. Adhesives: Compatible with insulation.

I. Membrane Adhesives: As recommended by membrane manufacturer.

PART 3 - EXECUTION

3.1 EXAMINATION

A. Section 01 31 00 – Project Management and Coordination: Coordination and project conditions.

B. Verify piping, equipment and ductwork has been pressure tested before applying insulation materials.

C. Verify surfaces are clean and dry, with foreign material removed.

3.2 INSTALLATION - PIPING SYSTEMS

A. Piping Exposed to View in Finished Spaces: Locate insulation and cover seams in least visible locations.

B. Continue insulation through penetrations of building assemblies or portions of assemblies having fire resistance rating of one hour or less. Provide intumescent firestopping when continuing insulation through assembly. Finish at supports, protrusions, and interruptions. Refer to Section 07 84 00 for penetrations of assemblies with fire resistance rating greater than one hour.

C. Piping Systems Conveying Fluids Below Ambient Temperature:

1. Insulate entire system including fittings, valves, unions, flanges, strainers, flexible connections, pump bodies, and expansion joints.
2. Furnish factory-applied or field-applied vapor retarder jackets. Secure factory-applied jackets with pressure sensitive adhesive self-sealing longitudinal laps and butt strips. Secure field-applied jackets with outward clinch expanding staples and seal staple penetrations with vapor retarder mastic.
3. Insulate fittings, joints, and valves with molded insulation of like material and thickness as adjacent pipe. Finish with glass cloth and vapor retarder adhesive or PVC fitting covers.

D. Glass Fiber Board Insulation:

1. Apply insulation close to equipment by grooving, scoring, and beveling insulation. Fasten insulation to equipment with studs, pins, clips, adhesive, wires, or bands.
2. Fill joints, cracks, seams, and depressions with bedding compound to form smooth surface. On cold equipment, use vapor retarder cement.
3. Cover wire mesh or bands with cement to a thickness to remove surface irregularities.

E. Hot Piping Systems less than 140 degrees F:

1. Furnish factory-applied or field-applied standard jackets. Secure with outward clinch expanding staples or pressure sensitive adhesive system on standard factory-applied jacket and butt strips or both.
2. Insulate fittings, joints, and valves with insulation of like material and thickness as adjoining pipe. Finish with glass cloth and adhesive or PVC fitting covers.
3. Do not insulate unions and flanges at equipment, but bevel and seal ends of insulation at such locations.

F. Hot Piping Systems greater than 140 degrees F:

1. Furnish factory-applied or field-applied standard jackets. Secure with outward clinch expanding staples or pressure sensitive adhesive system on standard factory-applied jacket and butt strips or both.
2. Insulate fittings, joints, and valves with insulation of like material and thickness as adjoining pipe. Finish with glass cloth and adhesive or PVC fitting covers.

3. Insulate flanges and unions at equipment.

G. Inserts and Shields:

1. Piping 1-1/2 inches Diameter and Smaller: Install galvanized steel shield between pipe hanger and insulation.
2. Piping 2 inches Diameter and Larger: Install insert between support shield and piping and under finish jacket.

    a. Insert Configuration: Minimum 6 inches long, of thickness and contour matching adjoining insulation; may be factory fabricated.
    b. Insert Material: Compression resistant insulating material suitable for planned temperature range and service.

H. Insulation Terminating Points:

1. Coil Branch Piping 1 inch and Smaller: Terminate hot water piping at union upstream of the coil control valve.
2. Condensate Piping: Insulate entire piping system and components to prevent condensation.

I. Closed Cell Elastomeric Insulation:

1. Push insulation on to piping.
2. Miter joints at elbows.
3. Seal seams and butt joints with manufacturer’s recommended adhesive.
4. When application requires multiple layers, apply with joints staggered.
5. Insulate fittings and valves with insulation of like material and thickness as adjacent pipe.

J. High Temperature Pipe Insulation:

1. Install in multiple layers to meet thickness scheduled.
2. Attach each layer with bands. Secure first layer with bands before installing next layer.
3. Stagger joints between layers.
4. Cover with aluminum jacket with seams located on bottom side of horizontal piping.

K. Pipe Exposed in Mechanical Equipment Rooms or Finished Spaces (less than 10 feet above finished floor): Finish with canvas jacket sized for finish painting.

L. Piping Exterior to Building: Provide vapor retarder jacket. Insulate fittings, joints, and valves with insulation of like material and thickness as adjoining pipe, and finish with glass mesh reinforced vapor retarder cement. Cover with aluminum jacket with seams located at 3 or 9 o’clock position on side of horizontal piping with overlap facing down to shed water or on bottom side of horizontal piping.

M. Prepare pipe insulation for finish painting. Refer to Section 09 90 00.

3.3 INSTALLATION - EQUIPMENT

A. Factory Insulated Equipment: Do not insulate.

B. Exposed Equipment: Locate insulation and cover seams in least visible locations.

C. Fill joints, cracks, seams, and depressions with bedding compound to form smooth surface. On cold equipment, use vapor retarder cement.

D. Equipment Containing Fluids Below Ambient Temperature:

1. Insulate entire equipment surfaces.
2. Apply insulation close to equipment by grooving, scoring, and beveling insulation. Fasten insulation to equipment with studs, pins, clips, adhesive, wires, or bands.
3. Furnish factory-applied or field-applied vapor retarder jackets. Secure factory-applied jackets with pressure sensitive adhesive self-sealing longitudinal laps and butt strips. Secure field-applied jackets with outward clinch expanding staples and seal staple penetrations with vapor retarder mastic.
4. Finish insulation at supports, protrusions, and interruptions.

E. Equipment Containing Fluids 140 degrees F Or Less:

1. Do not insulate flanges and unions, but bevel and seal ends of insulation.
2. Install insulation with factory-applied or field applied jackets, with or without vapor barrier. Finish with glass cloth and adhesive.
3. Finish insulation at supports, protrusions, and interruptions.

F. Equipment Containing Fluids Over 140 degrees F:

1. Insulate flanges and unions with removable sections and jackets.
2. Install insulation with factory-applied or field applied jackets, with or without vapor barrier. Finish with glass cloth and adhesive.
3. Finish insulation at supports, protrusions, and interruptions.

G. Equipment in Mechanical Equipment Rooms or Finished Spaces: Finish with canvas jacket sized for finish painting.

H. Equipment Located Exterior to Building: Install vapor barrier jacket or finish with glass mesh reinforced vapor barrier cement. Cover with aluminum jacket with seams located on bottom side of horizontal equipment.

I. Nameplates and ASME Stamps: Bevel and seal insulation around; do not cover with insulation.

J. Equipment Requiring Access for Maintenance, Repair, or Cleaning: Install insulation for easy removal and replacement without damage.

K. Prepare equipment insulation for finish painting. Refer to Section 09 90 00.

3.4 INSTALLATION - DUCTWORK SYSTEMS

A. Duct dimensions indicated on Drawings are finished inside dimensions.

B. Insulated ductwork conveying air below ambient temperature:

1. Provide insulation with vapor retarder jackets.
2. Finish with tape and vapor retarder jacket.
3. Continue insulation through walls, sleeves, hangers, and other duct penetrations.
4. Insulate entire system including fittings, joints, flanges, fire dampers, flexible connections, and expansion joints.

C. Insulated ductwork conveying air above ambient temperature:

1. Provide with or without standard vapor retarder jacket.
2. Insulate fittings and joints. Where service access is required, bevel and seal ends of insulation.

D. Ductwork Exposed in Mechanical Equipment Rooms or Finished Spaces (below 10 feet above finished floor): Finish with canvas jacket sized for finish painting.

E. External Glass Fiber Duct Insulation:

1. Secure insulation with vapor retarder with wires and seal jacket joints with vapor retarder adhesive or tape to match jacket.
2. Secure insulation without vapor retarder with staples, tape, or wires.
3. Install without sag on underside of ductwork. Use adhesive or mechanical fasteners where necessary to prevent sagging. Lift ductwork off trapeze hangers and insert spacers.
4. Seal vapor retarder penetrations by mechanical fasteners with vapor retarder adhesive.
5. Stop and point insulation around access doors and damper operators to allow operation without disturbing wrapping.

F. External Elastomeric Duct Insulation:

1. Adhere to clean oil-free surfaces with full coverage of adhesive.
2. Seal seams and butt joints with manufacturer’s recommended adhesive.
3. When application requires multiple layers, apply with joints staggered.
4. Insulate standing metal duct seams with insulation of like material and thickness as adjacent duct surface. Apply adhesive at joints with flat duct surfaces.
5. Lift ductwork off trapeze hangers and insert spacers.

G. Duct and Plenum Liner:

1. Adhere insulation with adhesive for 100 percent coverage.
2. Secure insulation with mechanical liner fasteners. Comply with SMACNA Standards for spacing.
3. Seal and smooth joints. Seal and coat transverse joints.
4. Seal liner surface penetrations with adhesive.
5. Cut insulation for tight overlapped corner joints. Support top pieces of liner at edges with side pieces.

H. Ducts Exterior to Building:

1. Install insulation according to schedule below.
2. Provide external insulation with vapor retarder jacket. Cover with caulked aluminum jacket with seams located on bottom side of horizontal duct section.
3. Calk seams at flanges and joints. Located major longitudinal seams on bottom side of horizontal duct sections.

I. Prepare duct insulation for finish painting. Refer to Section 09 90 00.

3.5 SCHEDULES

A. Cooling Services Piping Insulation Schedule:

PIPING SYSTEM	INSULATION TYPE	PIPE SIZE	INSULATION THICKNESS inches
Condensate Piping from Cooling Coils	P-5	All sizes	0.5
Refrigerant Suction	P-5	All sizes	1.5

B. Heating Services Piping Insulation Schedule:

PIPING SYSTEM	INSULATION TYPE	PIPE SIZE	INSULATION THICKNESS inches
Heating Water Supply and Return 141 to 200 degrees F	P-1		1.5

C. Equipment Insulation Schedule:

EQUIPMENT	INSULATION TYPE	INSULATION THICKNESS inches
Hot Water Pump Bodies	E-8	1.0
Hot Water Air Separators	E-8	1.0
Hot Water Expansion Tanks	E-8	1.0

D. Ductwork Insulation Schedule:

DUCTWORK SYSTEM	INSULATION TYPE	INSULATION THICKNESS inches
Supply Ducts (internally insulated)	D-4, D-5	1.0
Return Ducts (internally insulated)	D-4, D-5	1.0
Supply Ducts (externally insulated)	D-1	1.5

Return Ducts (externally insulated)	D-1	1.5
Supply Air, Return Air (exterior to building on roof)	D-2, D-7	2.0
Rectangular Supply Ducts Downstream of Variable Air Volume Boxes (internally insulated)	D-4, D-5	1.0
Rectangular Supply Ducts Downstream of Variable Air Volume Boxes (externally insulated)	D-1, D-2	1.5
Round Supply Ducts Downstream of Variable Air Volume Boxes (externally insulated)	D-1, D-2	1.5
Transfer Air Ducts (internally insulated)	D-5	1.0

END OF SECTION

SECTION 23 08 00

COMMISSIONING OF HVAC

PART 1 - GENERAL

1.1 COMMISSIONING DESCRIPTION

A. HVAC commissioning process includes the following tasks:

1. Testing and startup of HVAC equipment and systems.
2. Equipment and system verification checks.
3. Assistance in functional performance testing to verify testing and balancing, and equipment and system performance.
4. Provide qualified personnel to assist in commissioning tests, including seasonal testing.
5. Complete and endorse functional performance test checklists provided by Commissioning Authority to assure equipment and systems are fully operational and ready for functional performance testing.
6. Provide equipment, materials, and labor necessary to correct deficiencies found during commissioning process to fulfill contract and warranty requirements.
7. Provide operation and maintenance information and record drawings to Commissioning Authority for review verification and organization, prior to distribution.
8. Provide assistance to Commissioning Authority to develop, edit, and document system operation descriptions.
9. Provide training for systems specified in this Section with coordination by Commissioning Authority.

B. Equipment and Systems to Be Commissioned:

1. All Air conditioning units.
2. All Hydronic heating system (boiler, heat exchanger, pumps, fan coils etc)
3. Exhaust Fans.

C. Perform seasonal function performance tests for the following equipment and systems:

1. Heating equipment during heating season.
2. Cooling equipment during cooling season.
3. Fan interlocks.

1.2 COMMISSIONING SUBMITTALS

A. Draft Forms: Required.

B. Test Reports: Required.

C. Field Reports: Required.

1.3 CLOSEOUT SUBMITTALS

A. Project Record Documents: Required.

B. Operation and Maintenance Data: Required.

1.4 QUALITY ASSURANCE

A. Perform Work in accordance with BCA, ASHRAE, Guideline 1, NEBB, TABB requirements.

1.5 COMMISSIONING RESPONSIBILITIES

A. Equipment or System Installer Commissioning Responsibilities:

1. Attend commissioning meetings: Required.
2. Provide instructions and demonstrations for owner's personnel: Required.
3. Ensure participation of equipment manufacturers in appropriate startup, testing, and training activities: Required.
4. Develop startup and initial checkout plan: Required.
5. During verification check and startup process, execute hvac related portions of checklists for equipment and systems to be commissioned: Required.
6. Perform and document completed startup and system operational checkout procedures: Required.
7. Provide manufacturer’s representatives to execute starting of equipment: Required.
8. Provide personnel to assist commissioning authority during equipment or system verification checks and functional performance tests: Required.
9. Prior to startup, inspect, check, and verify correct and complete installation of equipment and system components for verification checks: Required.
10. Provide factory supervised startup services for equipment and systems: Required.
11. Perform verification checks and startup on equipment and systems: Required. Assist commissioning authority in performing functional performance tests on equipment and systems: Required.
12. Perform operation and maintenance training sessions: Required.
13. Conduct hvac system orientation and inspection: Required.

B. Temperature Controls Installer Commissioning Responsibilities:

1. Attend commissioning meetings: Required.
2. Review design for ability of systems to be controlled: Required.
3. Inspect, check, and confirm proper operation and performance of control hardware and software: Required.
4. Submittal of proposed procedures for performing automatic temperature control system point-to-point checks: Required.
5. Inspect check and confirm correct installation and operation of automatic temperature control system input and output device operation through point-to-point checks: Required.
6. Perform training sessions to instruct owner's personnel in hardware operation, software operation, programming, and application: Required.

7. Demonstrate system performance and operation to commissioning authority during functional performance tests including each mode of operation: Required.
8. Provide control system technician to assist during commissioning authority verification check and functional performance testing: Required.
9. Provide control system technician to assist testing, adjusting, and balancing agency: Required.
10. Assist in performing operation and maintenance training sessions: Required.

C. Testing, Adjusting, and Balancing Agency Commissioning Responsibilities:

1. Attend commissioning meetings: Required.
2. Participate in verification of testing, adjusting, and balancing report for verification or diagnostic purposes: Required.
3. Assist in performing operation and maintenance training sessions: Required.

PART 2 - PRODUCTS (NOT APPLICABLE)

PART 3 - EXECUTION

3.1 FIELD TESTING AND INSPECTIONS

A. Seasonal Sensitive Functional Performance Tests: Required.

B. Initial and Alternate Peak Season Test of Systems: Required.

C. Occupancy Sensitive Functional Performance Tests: Required.

END OF SECTION

SECTION 23 09 23

DIRECT-DIGITAL CONTROL SYSTEM FOR HVAC

PART 1 - GENERAL

1.1 SCOPE OF WORK

A. Scope of Work:

1. The installing contractor shall furnish and install a fully integrated building automation system, incorporating direct digital control (DDC) for energy management equipment monitoring and control, and subsystems with open communications capabilities.
2. All materials and equipment used shall be standard components, regularly manufactured for this and/or other systems and not custom designed especially for this project. All systems and components shall have been thoroughly tested and proven in actual use for at least five years. Wireless controllers and control devices shall not be acceptable.
3. Installing contractor shall be responsible for all BMS and Temperature Control wiring for a complete and operable system. All wiring shall be done in accordance with all local and national codes.
4. Commissioning shall be point to point upon completion.
5. DROP CONDUIT IN WALLS FOR ANY EMS/LC LOW VOLTAGE W/ JBOX AT LEAST UP TO ABOVE CEILING. PROVIDE CONDUIT FOR EMS/IP IN OPEN EQUIPMENT ROOMS, BELOW GROUND, ON ROOFS AS SPECIFIED IN ELECTRICAL DIVISION 26. In general, all wiring shall be in conduit.
6. Garage CO monitor, alarm, ventilation exhaust systems.

1.2 RELATED DOCUMENTS

A. Drawings and general provisions of the Contract, including General and Supplementary Conditions and Division 01 Specification Sections, apply to this Section.

B. This Section includes control equipment for HVAC systems and components, including control components for terminal heating and cooling units not supplied with factory-wired controls.

C. Related Sections include the following:

1. Section 23 05 19 "Meters and Gages for HVAC Piping" for measuring equipment that relates to this Section.
2. Section 23 05 93 "Testing, Adjusting, and Balancing for HVAC"
3. Section 23 08 00 "Mechanical Systems Commissioning"
4. Section 26 05 00 "Basic Materials and Methods"
5. Section 26 11 00 "Conduits and Raceways"

D. Products furnished but installed under the provisions of other sections include the following:

1. Control valves
2. Flowmeters
3. Flow switches
4. Pressure and/or temperature sensor wells & sockets.

E. Communications with Third Party Equipment:

1. Provide BACnet interface for any additional integral control systems provided under this section to be integrated into the Direct Digital Control System described in this section.
2. Provide technical assistance and technical field labor during engineering, startup and commissioning phases for the points included in the Sequence of Operation.

1.3 DEFINITIONS

A. BMS: Building management system.

B. BACnet: A control network technology platform for designing and implementing interoperable control devices and networks.

C. CE: Conformite Europeene (European Compliance).

D. CPT: Control power transformer.

E. DDC: Direct digital control.

F. EMI: Electromagnetic interference.

G. I/O: Input/output.

H. ISP: Internet service provider.

I. LonWorks: A control network technology platform for designing and implementing interoperable control devices and networks.

J. MS/TP: Master slave/token passing.

K. PC: Personal computer.

L. PID: Proportional plus integral plus derivative.

M. RFI: Radio-frequency interference.

N. RTD: Resistance temperature detector.

O. VFD: Variable-frequency motor controller.

1.4 SYSTEM PERFORMANCE

A. Comply with the following performance requirements:

1. Graphic Display: Display graphic with minimum 20 dynamic points with current data within 15 seconds.
2. Graphic Refresh: Update graphic with minimum 20 dynamic points with current data within 10 seconds.
3. Object Command: Reaction time of less than two seconds between operator command of a binary object and device reaction.
4. Object Scan: Transmit change of state and change of analog values to control units or workstation within six seconds.
5. Alarm Response Time: Annunciate alarm at workstation within 45 seconds. Multiple workstations must receive alarms within five seconds of each other.
6. Program Execution Frequency: Run capability of applications as often as five seconds, but selected consistent with mechanical process under control.
7. Performance: Programmable controllers shall execute DDC PID control loops, and scan and update process values and outputs at least once per second.
8. Reporting Accuracy: The system shall report all values with an end-to-end accuracy as listed or better than those listed in the following table:

Measured Variable	Reported Accuracy
Space Temperature	±0.5ºC [±1ºF]
Ducted Air	±0.5ºC [±1ºF
Outside Air	±1.0ºC [±2ºF]
Dewpoint	±1.5ºC [±3ºF]
Water Temperature	±0.5ºC [±1ºF]
Delta-T	±0.15ºC[±0.25ºF]
Relative Humidity	±5% RH
Water Flow	±5% of full scale
Airflow (terminal)	±10% of full scale *(see Note 1)*
Airflow (measuring stations)	±5% of full scale
Air Pressure (ducts)	±25 Pa [±0.1 "W.G.]
Air Pressure (space)	±3 Pa [±0.01 "W.G.]
Water Pressure	±2% of full scale *(see Note 2)*
Electrical (A, V, W, Power factor)	5% of reading *(see Note 3)*
Carbon Monoxide (CO)	±5% of reading
Carbon Dioxide (CO_2)	±50 ppm
Note 1: 10%-100% of scale	
Note 2: For both absolute and differential pressure	
Note 3: Not including utility-supplied meters	

9. Stability of Control. Control loops shall maintain measured variable at setpoint within the tolerances listed in Table 1.

TABLE 1: Control Stability and Accuracy

Controlled Variable	*Control Accuracy*	*Range of Medium*

Air Pressure	±50 Pa [±0.2" w.g.] ±3 Pa [±0.01" w.g.]	0-1.5 kPa [0-6" w.g.] -25 to 25 Pa [-0.1 to 0.1" w.g.]
Airflow	±10% of full scale	
Temperature	±0.5ºC [±1.0ºF]	
Humidity	±5% RH	
Fluid Pressure	±10 kPa [±1.5 psi]	0-1 kPa [1-150 psi]
" " differential	±250 Pa [±1.0" w.g.]	0-12.5 kPa [0-50"w.g.]

1.5 SEQUENCE OF OPERATION

A. Comply with sequence as indicated on Drawings.

1.6 ACTION SUBMITTALS

A. Product Data: Include manufacturer's technical literature for each control device. Indicate dimensions, capacities, performance characteristics, electrical characteristics, finishes for materials, and installation and startup instructions for each type of product indicated. Comply with submittal requirements listed in Division 01 Specification Sections.

1. DDC System Hardware: Bill of materials of equipment indicating quantity, manufacturer, and model number. Include technical data for operator workstation equipment, interface equipment, control units, transducers/transmitters, sensors, actuators, valves, relays/switches, control panels, and operator interface equipment.
2. Control System Software: Include technical data for operating system software, operator interface, color graphics, and other third-party applications.
3. Controlled Systems: Instrumentation list with element name, type of device, manufacturer, model number, and product data. Include written description of sequence of operation including schematic diagram.

B. Shop Drawings: Detail equipment assemblies and indicate dimensions, loads (Panel Full Load Amps), required clearances, components, and location and size of each field connection. Comply with submittal requirements listed in Division 01 Specification Sections.

1. Bill of materials of equipment indicating quantity, manufacturer, and model number.
2. General arrangement diagrams: Indicating locations of control panels and power supplies for coordination with Electrical.
3. Wiring Diagrams: Power, signal, and control wiring, including control system architecture/riser diagram.
4. Details of control panels, including controls, instruments, wire duct, wiring and labeling.

5. Written description of sequence of operation.
6. Schedule of valves including flow characteristics.
7. DDC System Hardware:

    a. Wiring diagrams for control units with termination numbers.
    b. Schematic diagrams and floor plans for field sensors and control hardware.
    c. Schematic diagrams for control, communication, and power wiring, showing trunk data conductors and wiring between operator workstation and control unit locations.

8. Controlled Systems:

    a. Schematic diagrams of each controlled system with control points labeled and control elements graphically shown, with wiring.
    b. Schematic diagrams showing wiring of all field installed instrumentation.
    c. Written description of sequence of operation including schematic diagram.
    d. Points list.

1.7 CLOSEOUT SUBMITTALS

A. Operation and Maintenance Data: For HVAC instrumentation and control system to include in emergency, operation, and maintenance manuals. In addition to items specified in Division 01 and Section 01 78 00 "Closeout Submittals," include the following:

1. Index sheet, listing contents in alphabetical order or control panel sequencing.
2. Manufacturer's equipment parts list of all functional components of the system, CD/DVD ROM disk or flash memory card/stick of system schematics, including wiring diagrams and Bill of Materials.
3. Description of sequence of operations.
4. As-Built interconnection wiring diagrams.
5. Manufacturer's descriptive literature, operating instruction, and maintenance and repair data, if available from BMS system manufacturer.
6. Backbone cable schematic showing remote electronic panel location, and all backbone data.
7. List of connected data points, including panels to which they are connected and input device.

B. Software and Firmware Operational Documentation: Include the following:

1. Software operating manuals.
2. Program Software Backup: On digital media or storage device, complete with data files.
3. Device address list.
4. Printout of software application and graphic screens.
5. Software license required by and installed for DDC workstations and control systems.

1.8 QUALITY ASSURANCE

A. Installer Qualifications: Automatic control system manufacturer's authorized representative who is trained and approved for installation of system components required for this Project.

B. Electrical Components, Devices, and Accessories: Listed and labeled as defined in NFPA 70, Article 100, by a testing agency acceptable to authorities having jurisdiction, and marked for intended use.

C. Comply with ASHRAE 135(BACnet) for DDC system components.

D. Materials and equipment shall be the catalogued products of manufacturers regularly engaged in production and installation of automatic temperature control systems and shall be manufacturer's latest standard design that complies with the specification requirements.

E. All BAS peer-to-peer network controllers, central system controllers, floor level controllers and local user displays shall be UL Listed under Standard UL 916, category PAZX.

F. All electronic equipment shall conform to the requirements of FCC Regulation, Part 15, Governing Radio Frequency Electromagnetic Interference and be so labeled.

1.9 WARRANTY

A. Provide all services, materials and equipment necessary for the successfully operation of the BACnet BAS system for a period of one year after beneficial use.

B. Provide all services, materials and equipment necessary for the successfully operation of the control valves and control damper operators for a period of five years after beneficial use.

C. The adjustment, required testing, and repair of the system includes all computer equipment, transmission equipment and all sensors and control devices.

D. The on-line support services shall allow the local BAS subcontractor to monitor and control the facility's building automation system. This remote connection to the facility shall be within 2 hours of the time that the problem is reported. This coverage shall be extended to include normal business hours, after business hours, weekends and holidays.

E. If the problem cannot be resolved with on-line support services, the BAS contractor shall dispatch the appropriate personnel to the job site to resolve the problem within 3 hours of the time that the problem is reported.

1.10 DELIVERY, STORAGE, AND HANDLING

A. Factory-Mounted Components: Where control devices specified in this Section are indicated to be factory mounted on equipment, arrange for shipping of control devices to equipment manufacturer.

B. System Software: Update to latest version of software at Project completion.

1.11 COORDINATION

A. Coordinate location of thermostats, humidistats, and other exposed control sensors with plans and room details before installation.

B. Coordinate supply of conditioned electrical branch circuits for control units and operator workstation.

C. Coordinate locations and mounting of control panels and low voltage power supplies.

D. Coordinate locations, mounting, and electrical power for VFD's.

PART 2 - PRODUCTS

2.1 CONTROL SYSTEM

A. In other Part 2 articles where titles below introduce lists, the following requirements apply to product selection:

1. Available Manufacturers: Subject to compliance with requirements, manufacturers offering products that may be incorporated into the Work include manufacturer listed.

B. Manufacturer

1. Delta Controls by Envise.

C. Control system shall consist of sensors, indicators, actuators, final control elements, interface equipment, other apparatus, accessories, and software connected to distributed controllers operating in multiuser, multitasking environment on token-passing network and programmed to control mechanical systems. An operator workstation permits interface with the network via dynamic color graphics with each mechanical system, building floor plan, and control device depicted by point-and-click graphics.

2.2 MATERIALS

A. All products used in this project installation shall be new, currently under manufacture, and shall be applied in similar installations for a minimum of two years. This installation shall not be used as a test site for any new products unless explicitly approved by the Owner's Representative in writing. Spare parts shall be available for at least five years after completion of this contract.

2.3 COMMUNICATION

A. All control products provided for this project shall comprise a BACnet internetwork. Communication involving control components (i.e., all types of controllers and Operator Workstations) shall conform to ANSI/ASHRAE Standard 135-2004, BACnet.

B. Each BACnet device shall operate on the BACnet Data Link/Physical layer protocol specified for that device as defined in this section.

C. The Contractor shall provide all communication media, connectors, repeaters, bridges, hubs, switches, and routers necessary for the internetwork.

D. All controllers shall have a communication port for connections with the Operator Workstations using the BACnet Data Link/ Physical layer protocol.

E. Communication services over the internetwork shall result in operator interface and value passing that is transparent to the internetwork architecture as follows:

1. Connection of an Operator Workstation device to any one controller on the internetwork will allow the operator to interface with all other controllers as if that interface were directly connected to the other controllers. Data, status information, reports, system software, custom programs, etc., for all controllers shall be available for viewing and editing from any one controller on the internetwork.
2. All database values (e.g., objects, software variables, custom program variables) of any one controller shall be readable by any other controller on the internetwork. This value passing shall be automatically performed by a controller when a reference to an object name not located in that controller is entered into the controller's database. An operator/installer shall not be required to set up any communication services to perform internetwork value passing.

F. The time clocks in all controllers shall be automatically synchronized daily. An operator change to the time clock in any controller shall be automatically broadcast to all controllers on the network.

G. The network shall have the following minimum capacity for future expansion:

1. Each Building Controller shall have routing capacity for 99 controllers.
2. The Building Controller network shall have capacity for 1000 Building Controllers.
3. The system shall have an overall capacity for 12,500 Building Controller, Advanced Application Controller, and Application Specific Controller input/output objects.

2.4 DDC EQUIPMENT

A. Operator Workstation: Furnish one PC-based microcomputer as shown on the system drawings. The workstation shall be able to access all information in the system. The workstation shall reside on the same Ethernet protocol network as the Building Controllers. The owner shall furnish appropriate static IP addresses as required for the system and connection to the Internet via high-speed cable modem, ADSL, ISDN, T1 or through the facility ISP. The owner shall pay for all monthly Internet access fees and connection charges. The workstation shall consist of the minimum configuration as follows:

1. Motherboard: With 8 integrated USB 2.0 ports, integrated Ethernet, audio, bios, and hardware monitoring.
2. Processor: Minimum dual core processor.

3. Random-Access Memory: 4 GB.
4. Graphics: HD compatible
5. Monitor: Minimum 24 inches, wide screen LCD color.
6. Keyboard: QWERTY, 105 keys in ergonomic shape.
7. Hard-Disk Drive: Minimum 320 GB.
8. DVD-ROM Read/Write Drive
9. Mouse: Three button
10. Uninterruptible Power Supply: 2 kVa.
11. Operating System: Microsoft Windows 7 Professional with high-speed Internet access.

    a. ASHRAE 135 Compliance: Workstation shall use ASHRAE 135 protocol and communicate using ISO 8802-3 (Ethernet) datalink/physical layer protocol.

12. Printer: Black-and-white, laser-jet type.
13. System Software:

    a. Operating System: Furnish a concurrent multi tasking operating system. The operating system also shall support the use of other common software applications that operate under Microsoft Windows. Examples include Microsoft Excel, Microsoft Word, and Microsoft Access. Acceptable operating system is Windows 7 Professional with high-speed Internet access.
    b. System Graphics: The operator workstation software shall be a graphical user interface (GUI). The system shall allow display of up to 10 dynamic and animated graphic screens at once for comparison and monitoring of system status. Provide a method for the operator to easily move between graphic displays and change the size and location of graphic displays on the screen. The system graphics shall be able to be modified while on-line. An operator with the proper password level shall be able to add, delete, or change dynamic objects on a graphic. Dynamic objects shall include analog and binary values, dynamic text, static text, and animation files. Graphics shall have the ability to show animation by shifting image files based on the status of the object.
    c. Custom Graphics: Custom graphic files shall be created with the use of a graphics generation package furnished with the system. The graphics generation package shall be a graphically based system that uses the mouse to create and modify graphics. The graphics generation package also shall provide the capability of capturing or converting graphics from other programs such as Visio or AutoCAD.
    d. Graphics Library: Furnish a complete library of standard HVAC equipment graphics such as chillers, boilers, air handlers, terminals, fan coils, and unit ventilators. This library also shall include standard symbols for other equipment including fans, pumps, coils, valves, piping, dampers, and ductwork. The library shall be furnished in a file format compatible with the graphics generation package program. Graphics shall be created by drag-and-drop selection of graphic symbols and drag-and-link with BACnet objects with dynamic and interactive display fields.
    e. Multilingual: Software shall be supported in the following languages English, Spanish, French, German, and Chinese.

f. Dynamic Data Exchange (DDE): Software shall support dynamic data sharing with other Windows-based programs for third party add-on functionality e.g. preventative maintenance, tenant billing, etc.

14. System Applications: Each workstation shall provide operator interface and off line storage of system information. Provide the following applications at each workstation:

    a. System Database Save and Restore: Each workstation shall store on the hard disk a copy of the current database of each Building Controller. This database shall be updated whenever an operator initiates a save command.
    b. Manual Database Save and Restore: A system operator with the proper password clearance shall be able to save the database from any system panel. The operator shall be able to clear a panel database via the network and may initiate a download of a specified database to any panel in the system from the network.
    c. System Configuration: The workstation software shall provide a method of configuring the system. This shall allow for future system changes or additions by users under proper password protection.
    d. On-Line Help: Provide a context-sensitive, on-line help system to assist the operator in operating and editing the system. On- line help shall be available for all applications and shall provide the relevant data for that particular screen. Additional help information shall be available through the use of hypertext.
    e. Security: Each operator shall be required to log on to the system with a user name and password in order to view, edit, add, or delete data. System security shall be selectable for each operator. The system supervisor shall have the ability to set passwords and security levels for all other operators. Each operator password shall be able to restrict the functions accessible to viewing and/or changing each system application.
    f. System Diagnostics: The system shall automatically monitor the operation of all workstations, printers, network connections, building management panels, and controllers.
    g. Alarm Processing: Any object in the system shall be configurable to alarm in and out of normal state. The operator shall be able to configure the alarm limits, alarm limit differentials, states, and reactions for each object in the system.
    h. Alarm Messages: Alarm messages shall use the English language descriptor for the object in alarm, in such a way that the operator will be able to recognize the source, location, and nature of the alarm without relying upon acronyms or other mnemonics.
    i. Alarm Reactions: The operator shall be able to determine (by object) what if any actions are to be taken during an alarm. Actions shall include logging, printing, starting programs, displaying messages, dialing out to remote stations, paging, providing audible annunciation.
    j. Trend Logs: The operator shall be able to define a custom trend log for any data object in the system. This definition shall include change-of-value digital, change-of-value analog, time interval, start time, and stop time. Trend data shall be sampled and stored on the Building Controller panel and be archivable on the hard disk and be retrievable for use in spreadsheets and standard database programs.

k. Alarm and Event Log: The operator shall be able to view all system alarms and change of states from any location in the system. Events shall be listed chronologically. An operator with the proper security level may acknowledge and clear alarms.
l. Object and Property Status and Control: Provide a method for the operator to view, and edit if applicable, the status of any object and property in the system. The status shall be available by menu, on graphics, or through custom programs.
m. Clock Synchronization: The real-time clocks in all building control panels and workstations shall be using the BACnet Time Synchronization service. The system also shall be able to automatically synchronize all system clocks daily from any operator-designated device in the system. The system shall automatically adjust for daylight savings and standard time, if applicable.

B. Diagnostic Terminal Unit (Laptop): Portable laptop, PC-based microcomputer terminal capable of accessing system data by connecting to system network with minimum configuration as follows:

1. System: With one integrated USB 2.0 port, integrated Ethernet, integrated audio, bios, and hardware monitoring.
2. Processor: Intel Core i7
3. Random-Access Memory: 4 GB.
4. Graphics: HD compatible
5. Monitor: Minimum 15 inches, LCD color.
6. Keyboard: QWERTY 105 keys in ergonomic shape.
7. Hard-Disk Drive: Minimum 320 GB.
8. DVD-ROM Read/Write Drive
9. Pointing Device: Touch pad or other internal device.
10. Operating System: Microsoft Windows 7 Professional with high-speed Internet access.

C. Diagnostic Terminal Unit (Tablet): Portable tablet, wireless based microcomputer capable of accessing system data wirelessly by connecting to system network with minimum configuration as follows:

1. System: Mobile or remote keyboard docking station with built-in rechargeable battery.
2. Processor: Intel Atom (1.50GHz) 512KB.
3. Wireless: Wireless 802.11a/b/g/n and BlueTooth 4.0.
4. Random-Access Memory: 2 GB SDRAM.
5. Graphics: Intel Graphics Media Accelerator.
6. Display: 10.1" (1280x800) Wide Viewing Angle LED.
7. Mobile Brandband: Wireless Mini Card.
8. Solid State Drive: Minimum 64 GB.
9. Drive: DVD Drive.
10. Pointing Device: Touch pad & pen input device.
11. Webcam: Dual Webcams with Digital Microphone, 1.2MP Front / 5.0MP Rear.
12. Operating System: Microsoft Windows 7 Professional with high-speed Internet access

D. Report Management:

1. The following reporting capability shall be provided at the operator workstation.

    a. Reporting:

        1) Internal reports built into operator workstation software
        2) External reporting via ODBC

    b. Internal Reports:

        1) User definable query reports (support advanced multiple property, multiple object).
        2) Reports shall be scheduled for automatic generation by schedule or event.
        3) Manual execution to printing/file.
        4) Ability to save report in system report folder.
        5) Query controller hierarchy.
        6) Report to multiple destinations:

            a) Email
            b) Print
            c) File (text, csv, xml)
            d) Terminal

    c. Enterprise Interface

        1) ODBC driver supporting common SQL statements (select, update, insert, where, order by, group by, etc.)
        2) Allow integration to Enterprise software
        3) Shall be capable of being used with third party software that supports ODBC connection such as: Microsoft Access, Excel, Crystal Reports, etc.
        4) All queries shall be real time into live controller network.
        5) Shall be able to both read and write using SQL.

E. Internet Connection: The owner shall furnish appropriate static IP addresses as required for the system and connection to the Internet via high-speed cable modem, ADSL, ISDN, T1 or through the facility ISP. The owner shall pay for all monthly Internet access fees and connection charges.

F. Web Browser Interface

1. The system shall be capable of supporting an unlimited number of clients using a standard Web browser such as Internet Explorer™ 9 or Google Chrome™ or Safari™ or Firefox™.
2. The Web browser software shall run on any operating system and system configuration that is supported by the Web browser. Systems that require specific machine requirements in terms of processor speed, memory, etc., in order to allow the Web browser to function with the BAS, shall not be acceptable.
3. The Web browser shall provide the same view of the system, in terms of graphics, schedules, calendars, logs, etc., and provide the same interface methodology as is provided by the Graphical User Interface. Systems that

require different views or that require different means of interacting with objects such as schedules, or logs, shall not be permitted.

4. The Web browser client shall support at a minimum, the following functions:

    a. User log-on identification and password shall be required. If an unauthorized user attempts access, a blank web page shall be displayed. Security using Java authentication and encryption techniques to prevent unauthorized access shall be implemented.

5. Graphical screens developed for the GUI shall be the same screens used for the Web browser client. Any animated graphical objects supported by the GUI shall be supported by the Web browser interface.
6. HTML editing of the Web page shall be allowed if the user desires a specific look or format.
7. Storage of the graphical screens shall be in the Server, without requiring any graphics to be stored on the client machine.
8. Real-time values displayed on a Web page shall update automatically without requiring a manual "refresh" of the Web page.
9. Users shall have administrator-defined access privileges. Depending on the access privileges assigned, the user shall be able to perform the following:

    a. Modify common application objects, such as schedules, calendars, and set points in a graphical manner.

10. Holidays shall be set by using a graphical calendar, without requiring any keyboard entry from the operator.
11. Commands to start and stop binary objects shall be done by right-clicking the selected object and selecting the appropriate command from the pop-up menu. No entry of text shall be required.
12. The system shall provide the capability to specify a user's (as determined by the log-on user identification) home page. Provide the ability to limit a specific user to just their defined home page. From the home page, links to other views, or pages in the system shall be possible, if allowed by the system administrator.
13. Graphic screens on the Web Browser client shall support hypertext links to other locations on the Internet or on Intranet sites, by specifying the Uniform Resource Locator (URL) for the desired link.

G. Sustainability Dashboard (Web Based Dashboard):

1. Provide a web accessible graphical interface to the system with a summary of the facilities sustainability metrics to include:

    a. Total facility energy consumption by month, this year and last year.
    b. Current facility electrical demand.
    c. Electrical demand trend over the last 48 hours
    d. Total facility gas consumption by month, this year and last year.
    e. Monthly water consumption totals for each meter listed in the point schedule.
    f. The facility's total energy consumption quotient (MMBTU's / sq.ft. / year) calculated for the most recent 12 months.
    g. The design team's baseline for energy consumption for the facility by month (furnished by the design team). This should be displayed along with the

actual consumption in a bar or line graph format to clearly show how the facility is doing versus design.
h. Energy Star Rating for the facility.
i. Equivalent Carbon Emissions for the facilities total energy consumption over the last 12 months versus the design-teams' baseline.
j. The ASHRAE Building EQ Operational Rating (calculated from the real time energy consumption index for the previous 12 months) and the design team furnished Building EQ Asset rating.

H. Server Functions and Hardware:

1. A central server shall be provided. The server shall support all Network Area Controllers connected to the customer's network whether local or remote.
2. Local connections shall be via an Ethernet LAN. Remote connections can be via ISDN, ADSL or T1 connection.
3. The server shall provide scheduling for all Area Controllers and their underlying field control devices.
4. The server shall implement the BACnet Command Prioritization scheme (16 levels) for safe and effective contention resolution of all commands issued to Network Area Controllers. Systems not employing this prioritization shall not be accepted.
5. The server shall provide central management of alarm data for all Network Area controllers supported by the server inclusive of the following:

   a. View and acknowledge alarms.
   b. View and edit comments on acknowledged alarms.

6. Server Hardware Requirements: The server hardware platform shall have the following requirements:

   a. Processor: Minimum quad core processor or multiple dual core processor.
   b. Random-Access Memory: 8 GB minimum.
   c. Hard-Disk Drive: Minimum 320 GB.
   d. NIC: Minimum 2 10/100 Network Cards.
   e. Video Card & rack mounted.
   f. Operating System: Microsoft Windows Server 2012.

I. Controller Software

1. Furnish the following applications software for building and energy management. All software applications shall reside and operate in the system controllers. Editing of applications shall occur at the operator workstation
2. System Security:

   a. User access shall be secured using individual security passwords and user names.
   b. Passwords shall restrict the user to the site, objects, applications, and system functions as assigned by the system manager.
   c. User Log On/Log Off attempts shall be recorded.

3. Scheduling: Provide the capability to schedule each object or group of objects in the system. Each schedule shall consist of the following:

    a. Provide an event scheduling system that allows the operator to specify a single event, multiple day event and/or recurring events. The event schedule specifies both the on/off times and the date in a calendar planning format similar to Microsoft Outlook®.
    b. Calendar Schedules: Provide the capability for the operator to define up to 99 special schedules. These schedules may be placed on the scheduling calendar and will be repeated each year. The operator shall be able to define the length of each calendar period.

4. Alarm Reporting: The operator shall be able to determine the action to be taken in the event of an alarm. Alarms shall be routed to the appropriate workstations based on time and other conditions.
5. Remote Communication: The system shall have the ability to send text messages to cell phones and email messages in the event of an alarm using SMTP protocol.
6. Maintenance Management: The system shall monitor equipment status and generate maintenance messages based upon user-designated run-time, starts, and/or calendar date limits.
7. Sequencing: Provide application software to properly sequence the start and stop of chillers, boilers, and pumps to minimize energy usage in the facility.
8. PID Control: A PID (proportional-integral-derivative) algorithm with direct or reverse action and anti-windup shall be supplied. The algorithm shall calculate a time-varying analog value that is used to position an output or stage a series of outputs. The controlled variable, setpoint, and PID gains shall be user-selectable.
9. Staggered Start: This application shall prevent all controlled equipment from simultaneously restarting after a power outage.
10. Energy Calculations: Provide software to allow instantaneous power (e.g., kW) or flow rates (e.g., L/s [GPM]) to be accumulated and converted to energy usage data. Provide an algorithm that calculates a sliding-window kW demand value.
11. Anti-Short Cycling: All binary output objects shall be protected from short cycling. This feature shall allow minimum on-time and off-time to be selected.
12. On/Off Control with Differential: Provide an algorithm that allows a binary output to be cycled based on a controlled variable and setpoint. The algorithm shall be direct-acting or reverse-acting and incorporate an adjustable differential.
13. Run-time Totalization: Provide software to totalize run-times for all binary input objects. A high run-time alarm shall be assigned, if required, by the operator.

J. General Building Controllers:

1. Provide an adequate number of BACnet® Building Controllers to achieve the performance specified in the Part 1 Article on "System Performance." Each of these panels shall meet the following requirements. Additionally, provide Building Controllers where shown on the drawings.

    a. The Energy Management and Control System shall be comprised of one or more independent, standalone, microprocessor-based Building Controllers to manage the global strategies described in the System Software section.

b. The Building Controller shall have sufficient memory to support its operating system, database, and programming requirements.
c. Data shall be shared between networked Building Controllers.
d. The operating system of the Building Controller shall manage the input and output communication signals to allow distributed controllers to share real and virtual object information and allow central monitoring and alarms.
e. Controllers that perform scheduling shall have a battery or super-cap backed up real-time clock.

2. Communications:

a. Each Building Controller shall support direct Ethernet or a communications card. The Building Controller shall be connected to the BACnet network using the ISO 8802-3 (Ethernet) Data Link/ Physical layer protocol, or BACnet IP (Annex J).
b. Each Building Controller with a communications card shall perform BACnet routing if connected to a network of Custom Application and Application Specific Controllers.
c. The controller shall provide a service communication port using BACnet Data Link/ Physical layer protocol P-T-P for connection to a hand-held workstation/ and/or modem.
d. The Building Controller secondary communication network shall support BACnet MS/TP.

3. Environment: Controller hardware shall be suitable for the anticipated ambient conditions.

a. Controllers used outdoors and/or in wet ambient conditions shall be mounted within waterproof enclosures and shall be rated for operation at 0°C to 40°C [32°F to 100°F] and 10 to 90% RH.
b. Controllers used in conditioned space shall be mounted in dust proof enclosures and shall be rated for operation at 0°C to 50°C [32°F to 120°F].

4. Building Controllers shall be fully peer to peer.
5. Serviceability: Provide diagnostic LEDs for power, communication, and processor. All wiring connections shall be made to field- removable, modular terminal strips - or to a termination card connected by a ribbon cable.
6. Memory: The Building Controller shall have as a minimum standard SRAM of 256 KB, standard DRAM of 1MB and standard non-volatile 1 MB of flash memory in lieu of EPROM. Memory shall be user extendible through RAM chip sockets and SIMMs for future memory expansion.
7. Immunity to power and noise: Controller shall be able to operate at 90% to 110% of nominal voltage rating and shall perform an orderly shutdown below 80% nominal voltage. The Building Controller shall maintain all database information including BIOS and programming information in the event of a power loss for at least 72 hours. Operation shall be protected against electrical noise of 5 to 120 Hz and from keyed radios up to 5 W at 1 m [3 ft].
8. Inputs/Outputs:

a. Inputs: Controller input/output board shall support dry contact, 0-5 VDC and 0-10 VDC- voltage, 4-20 mA- current and thermistor-resistive signal types on

an individual basis for connecting any status or sensing device. Analog resolution shall be minimum 10-bit A to D.

b. Outputs: Controller input/output board shall support plug-and-play I/O modules or built in HAO modules configured with manual-auto-off override switch, potentiometer and input channel for feedback status or an unrelated analog or digital input. Output supported shall be 0-10 VDC. All HAO's shall be supervised.
c. Diagnostics: Controller input board shall have variable intensity LEDs providing input status indication. Outputs shall have variable intensity LEDs indicating the output voltage with Color indication of HAO's status when present.
d. Bump-less Transfer: On analog outputs with override switches, provide a Hand-Auto-Off switch either built-in or external to the board that allows for manual positioning of the output, then transferring the output to automatic without any "bump" in the output voltage (don't go through off before transferring from manual to auto).

K. Entelibus Building Controllers:

1. Provide a fully programmable, BTL listed, UL 916 certified, expandable modular style native BACnet® Building Controller, (BACnet Device Profile B-BC), which supports the following minimum communications methods as standard: BACnet/IP, BACnet over Ethernet and BACnet MS/TP.
2. The controller shall be expandable in functionality and shall consist of a main control unit and multiple DIN rail mounted, removable plug in modular component units which shall include the following:

a. The Manager shall contain the primary 32 - bit RISC CPU, 64 MB flash memory and 32 MB SDRAM storage memory with SD/SDIO card slot for memory expansion, a real-time clock (temperature compensated), as well as Ultracap power backup for real time clock & memory.
b. Standard Communications ports shall include as minimum external 3 Port 10/100 Ethernet Switch communication ports, (2) RS-485 Ports (up to 76800 bps) as well as 2 USB host ports. The manager unit shall communicate and provide the control logic for the plug in I/O modules via expansion backplanes. The manager must be able to communicate with sufficient plug-in modules to accommodate 500 connected I/O points at one time.
c. Controller activity of power/scan and Ethernet ports shall be indicated through face mounted LED status light indications.

3. The modular I/O components shall be hot swappable and provide a variation of input or output ranges by positioning of jumpers located on each module.

a. Inputs: Modular controller input/output unit shall support dry contact, RTD, 0-5 VDC and 0-10 VDC- voltage, 4-20 mA- current and thermistor-resistive signal types on an individual basis for connecting any status or sensing device. Analog resolution shall be minimum 10-bit A to D.
b. Outputs: Modular controller input/output unit shall have or built in Hand-Auto-Off (HAO) modules configured with manual-auto-off override switch, potentiometer and input channel for feedback status and/or unrelated

analog or digital input. Outputs supported shall be 0-10 VDC, internal SPST relays, Triac, and internally powered current loop control from 0-20mA .
c. All HAO's shall be supervised.

4. Diagnostics: Modular controller input unit shall have variable intensity LEDs providing analog input status indication or configurable tri-color LEDs for binary input status indication. Outputs shall have variable intensity LEDs indicating the output voltage with Color indication of HAO's status when present.
5. Bump-less Transfer: On outputs with override switches, provide an HAO switch either built-in or external to the board that allows for manual positioning of the output, then transferring the output to automatic without any "bump" in the output voltage, (don't go through off before transferring from manual to auto).

L. Advance Application Controllers:

1. General: Provide an adequate number of BACnet®Advanced Application Controllers to achieve the performance specified in the Part 1 Article on "System Performance." Each of these panels shall meet the following requirements:

a. The Advanced Application Controller shall have sufficient memory to support its operating system, database, and programming requirements.
b. Advanced Application Controllers shall be fully peer to peer.
c. The operating system of the Controller shall manage the input and output communication signals to allow distributed controllers to share real and virtual object information and allow central monitoring and alarms.
d. All equipment that requires scheduling shall be scheduled in that equipments controller.
e. Both firmware and controller database shall be loadable over the network.

2. Communication:

a. Each Advanced Application Controller shall reside on a BACnet network using the MS/TP or Ethernet Data Link/ Physical layer protocol.
b. The controller shall provide a service communication port using BACnet Data Link/ Physical layer protocol for connection to portable operators workstation and allow access to the entire network.

3. Environment: Controller hardware shall be suitable for the anticipated ambient conditions.

a. Controllers used outdoors and/or in wet ambient conditions shall be mounted within waterproof enclosures and shall be rated for operation at 0°C to 40°C [32°F to 100°F].
b. Controllers used in conditioned space shall be mounted in dust proof enclosures and shall be rated for operation at 0°C to 50°C [32°F to 120°F].

4. Serviceability: Provide diagnostic LEDs for power, communication, and processor. All wiring connections shall be made to field-removable, modular terminal strips - or to a termination card connected by a ribbon cable.
5. Memory: The Advanced Application Controller shall be non-volatile FLASH memory.

6. Immunity to power and noise: Controller shall be able to operate at 90% to 110% of nominal voltage rating and shall perform an orderly shutdown below 80% nominal voltage. Operation shall be protected against electrical noise of 5 to120 Hz and from keyed radios up to 5 W at 1 m [3 ft].

M. Application Specific Controllers:

1. General: Provide BACnet® Application Specific Controllers (ASCs) as required to execute the sequence of operations. ASC's are microprocessor-based DDC controllers which through hardware or firmware design are able to control a wide variety of equipment. They shall be fully user-configurable.

   a. Each ASC shall be capable of standalone operation and shall continue to provide control functions without being connected to the network.
   b. Each ASC will contain sufficient I/O capacity to control the target system.
   c. Both firmware and controller database shall be loadable over the network
   d. ASC's shall come with an integrated housing to allow for easy mounting and protection of the circuit board. Only wiring terminals shall be exposed.

2. Communication:

   a. The controller shall reside on a BACnet network using the MS/TP Data Link/ Physical layer protocol or BACnet® over ZigBee protocol.
   b. Each controller shall have a BACnet Data Link/ Physical layer compatible connection for a laptop computer or a portable operator's tool. This connection shall be extended to a space temperature sensor port where shown and allow access to the entire network.

3. Environment: The hardware shall be suitable for the anticipated ambient conditions.

   a. Controllers used outdoors and/or in wet ambient conditions shall be mounted within waterproof enclosures, and shall be rated for operation at -40°C to 65°C [40°F to 150°F] and/or suitably installed in a heated or fan cooled enclosure
   b. Controllers used in conditioned space shall be mounted in dust proof enclosures and shall be rated for operation at 0°C to 50°C [32°F to 120°F].

4. Serviceability: Provide diagnostic LEDs for power, communication, and processor. All wiring connections shall be made to field-removable, modular terminal strips.
5. Memory: The Application Specific Controller shall use non-volatile memory and maintain all BIOS and programming information in the event of a power loss.
6. Immunity to power and noise: ASC shall be able to operate at 90% to 110% of nominal voltage rating and shall perform an orderly shutdown below 80%. Operation shall be protected against electrical noise of 5-120 Hz and from keyed radios up to 5 W at 1 m [3 ft].
7. Transformer: Power supply for the ASC must be rated at minimum of 125% of ASC power consumption and shall be fused or current limiting type.
8. Input/Output: ASC shall support as a minimum, directly connected, a combination of analog outputs and binary outputs and universal software

selectable analog or digital inputs. ASC inputs shall support 0-5 VDC-voltage, 4-20mA-current, thermistor-resistance and dry contacts. ASC outputs shall support 0-10 VDC-voltage, digital triac rated at 0.5 amps at 24 VAC.

N. I/O Interface:

1. Hardwired inputs and output points may be wired into the system through Building, Advanced Application, or Application Specific Controllers.
2. Digital inputs shall allow the monitoring of ON/OFF signals from remote devices. The digital inputs shall provide a current of at least 12 mA to be compatible with commonly available control devices and shall be protected against the effects of contact bounce and noise. Digital inputs shall sense "dry contact" closure without external power (other than that provided by the controller) being applied.
3. Pulse Accumulation Inputs: Accept 0-200 Hz and 0-2000 Hz.
4. Analog inputs shall allow the monitoring of 0-5 VDC, 0-10 VDC-voltage, 4-20 mA-current, or thermistors. Analog inputs shall be compatible and be field configurable to commonly available sensing devices.
5. Digital outputs shall provide for ON/OFF operation. Digital outputs on Building and Advanced Application Controllers shall have three-position override switches, Hand-Off-Auto with status lights. Outputs shall be selectable for either normally open or normally closed operation.
6. Analog outputs shall provide a modulating signal for the control of end devices. Outputs shall provide a 0 to 10 VDC signal as required to provide proper control of the output device. Analog outputs on Building or Advanced Application Controllers shall have status lights and a two-position (AUTO/MANUAL) switch and manually adjustable potentiometer for manual override. Analog outputs shall not exhibit a drift of greater than 0.4% of range per year.
7. Tri-State Outputs: Provide tri-state outputs (two coordinated binary outputs) for control of three-point floating type electronic actuators without feedback. Use of three-point floating devices shall be limited to zone control and terminal unit control applications (VAV terminal units, duct mounted heating coils, zone dampers, radiation, etc.)
8. System Object Capacity. The system size shall be expandable to at least twice the number of input/output objects required for this project. Additional controllers (along with associated devices and wiring) shall be all that is necessary to achieve this capacity requirement. The Operator Workstations installed for this project shall not require any hardware additions or software revisions in order to expand the system.

O. Power Supplies: Transformers with Class 2 current-limiting type or overcurrent protection; limit connected loads to 80 percent of rated capacity. DC power supply shall match output current and voltage requirements and be full-wave rectifier type with the following:

1. Output ripple of 5.0 mV maximum peak to peak.
2. Built-in overcurrent protection with auto reset.

2.5 ELECTRONIC SENSORS

A. Description: Vibration and corrosion resistant; for wall, immersion, or duct mounting as required.

B. Thermistor Temperature Sensors and Transmitters:

1. Available Manufacturers:

   a. ACI.
   b. BAPI.
   c. Honeywell International Inc.; Home & Building Control
   d. Delta Controls.
   e. Ebtron, Inc.
   f. Kele.
   g. Precon.
   h. MAMAC Systems, Inc.
   i. Greystone Energy Systems Inc.

2. Accuracy: Plus or minus 0.36 deg F at calibration point.
3. Wire: Twisted, shielded-pair cable.
4. Insertion Elements in Ducts: Single point, 4 to 18 inches long; use where not affected by temperature stratification or where ducts are smaller than 9 sq. ft.
5. Averaging Elements in Ducts: 8 to 24 ft long flexible 18 to 36 inches long rigid; use where prone to temperature stratification or where ducts are larger than 10 sq. ft.
6. Insertion Elements for Liquids: Brass or stainless-steel socket with minimum insertion length of 2-1/2 inches.
7. Room Sensor:

   a. Built-in 10k ohm at 77 deg F Thermistor.
   b. Plastic housing.
   c. Programmable (optional)
   d. Occupancy override: Push button (optional)
   e. LCD display with push button control (optional)
   f. Built-in humidity sensor (optional).
   g. Screw-type terminal connectors.
   h. Color: White.

8. Outside-Air Sensors: Watertight inlet fitting, shielded from direct sunlight.

C. RTDs and Transmitters:

1. Available Manufacturers:

   a. ACI
   b. BAPI
   c. Kele.
   d. MAMAC Systems, Inc.
   e. Minco.
   f. Greystone Energy Systems Inc.

2. Room Sensor Accuracy: Plus or minus 0.8 percent of span.
3. Duct, Average, Immersion & Outside Air Sensor Accuracy: Plus or minus 0.1 percent of span.
4. Wire: Twisted, shielded-pair cable.

5. Insertion Elements in Ducts: Single point, 8 inches long; use where not affected by temperature stratification or where ducts are smaller than 9 sq. ft.
6. Averaging Elements in Ducts: 12 or 24 inch long copper coil;use where prone to temperature stratification or where ducts are larger than 9 sq. ft.; length as required.
7. Insertion Elements for Liquids: Brass or stainless steel well with minimum insertion length of 5-1/2 inches.
8. Outside-Air Sensors: Watertight inlet fitting, shielded from direct sunlight.
9. Room Sensor Cover Construction: Manufacturer's standard locking covers.

    a. Insulating Bases: For sensors located on exterior walls.
    b. Sensor with LCD display tamper-proof lockable push buttons.

D. Humidity Sensors: Bulk polymer sensor element.

1. Available Manufacturers:

    a. General Eastern Instruments.
    b. General Electric.
    c. Kele.
    d. MAMAC Systems, Inc.
    e. Minco.
    f. Greystone Energy Systems Inc.
    g. Vaisala.

2. Accuracy: Plus or minus 2 percent relative humidity (10% to 90% RH).
3. Room Sensor Range: 0 to 95 percent relative humidity, non-condensing.
4. Duct Sensor: 0 to 99 percent, non-condensing.
5. Outside-Air Sensor: 0 to 100 percent relative humidity range with mounting enclosure, suitable for operation at outdoor temperatures of minus 4 to 140 deg F.
6. Duct and Sensors: With element guard and mounting plate, range of 0 to 100 percent relative humidity.

E. Pressure Transmitters/Transducers:

1. Available Manufacturers:

    a. Ashcroft.
    b. Cleveland Controls.
    c. Emerson, Rosemount
    d. General Eastern Instruments.
    e. MAMAC Systems, Inc.
    f. Modus.
    g. Setra.
    h. Greystone Energy Systems Inc.
    i. United Electric.
    j. Vaisala.

2. Air Differential Pressure Transmitter: Non-directional or bidirectional sensor with range for expected input, and temperature compensated.

a. Accuracy: 1 percent of range with adjustable zero & span.
b. Output: 4 to 20 mA.
c. Building Static-Pressure Range: 0- to 0.25-inch wg.
d. Duct Static-Pressure Range: 0- to 5-inch wg.

3. Water Pressure Transducers: Stainless-steel diaphragm construction, suitable for service; minimum 150-psig operating pressure; linear output 4 to 20 mA.
4. Water Differential-Pressure Transducers: Stainless-steel diaphragm construction, suitable for service; minimum 150-psig operating pressure and tested to 300-psig; linear output 4 to 20 mA.
5. Differential-Pressure Switch (Air or Water): Snap acting, with pilot-duty rating and with suitable scale range and differential.
6. Pressure Transmitters: Direct acting for gas, liquid, or steam service; range suitable for system; linear output 4 to 20 mA.

F. Room Static Pressure Sensor:

1. Stainless steel, ivory, or white plastic wall plate.
2. Wall mounted to standard electrical box.
3. 100 micron stainless steel breather vent.

2.6 STATUS SENSORS

A. Available Manufacturers:

1. ACI
2. Veris Industries

B. Status Inputs for Fans: Current switch or built-in auxiliary contacts on VFD’s.

C. Status Inputs for Pumps: Current switch or built-in auxiliary contacts on VFD’s.

D. Current Transducer: Current-sensing fixed or split-core transducer with loop powered 4-20mA output, adjustable amperage range.

E. Power Monitor: 3-phase type with disconnect/shorting switch assembly, listed voltage and current transformers, with pulse kilowatt hour output and 4- to 20-mA kW output.

F. Current Switches: Self-powered, solid-state with adjustable trip current, selected to match current and system output requirements.

G. Electronic Valve Actuator Position Indicator: Visual scale indicating percent of travel and 2- to 10-V dc, feedback signal for modulating control and for 2-position control built-in auxiliary contact switches are acceptable.

H. Damper Position Indicator: 2- to 10-V dc, feedback signal for modulating control and for 2-position control built-in auxiliary contact switches for spring return actuators are acceptable.

I. Water-Flow Switches: Bellows-actuated mercury or snap-acting type with pilot-duty rating, stainless-steel or bronze paddle, with appropriate range and differential adjustment, in NEMA 250, Type 1 or Type 3R enclosure depending on location.

2.7 GAS DETECTION EQUIPMENT

A. Available Manufacturers:

1. 3M
2. BAPI
3. General Electric Inc.
4. Greystone Energy Systems Inc.
5. Honeywell International Inc.; Home & Building Control.
6. INTEC Controls, Inc.
7. Kele
8. MSA Canada Inc.
9. Vulcain Inc.

B. Carbon Monoxide Detectors: Single or multichannel, dual-level detectors using solid-state plug-in sensors with a 3-year minimum life; suitable over a temperature range of 32 to 104 deg F; with 2-stage alarming contacts and a measurement range between 0 and 200 ppm. Transmitter sensor outputs: 4- to 20-mA output; for wall or duct mounting.

C. Carbon Dioxide Sensor and Transmitter: Single detectors using solid-state infrared sensors; suitable over a temperature range of 32 to 122 deg F and accuracy of plus or minus 75 ppm, measurement range between 0 and 2000 ppm with continuous or average reading, 4- to 20-mA or 0-10 VDC output; for wall or duct mounting.

D. Oxygen Sensor and Transmitter: Single detectors using solid-state sensing; suitable over a temperature range of 40 to 104 deg F and accuracy of plus or minus 1 percent, with a range of 0 to 25 percent oxygen, 4- to 20-mA or 0-10 VDC output; for wall mounting.

E. Occupancy Sensor: Passive infrared, with time delay, daylight sensor lockout, sensitivity control, and 180-degree field of view with vertical sensing adjustment; for flush mounting.

2.8 AIRFLOW MEASURING STATIONS

A. Duct Airflow Station: Combination of air straightener and multiport, self-averaging pitot tube station or thermal dispersion airflow temperature measurement device technology.

1. Available Manufacturers:

a. ACCUTROL.

2. Casing: Galvanized-steel frame for pitot tube station.
3. Flow Straightener: Aluminum honeycomb, 3/4-inch parallel cell, 3 inches deep.

4. Sensing Manifold: Copper manifold with bullet-nosed static pressure sensors positioned on equal area basis.
5. Thermal dispersion airflow station: Aluminum alloy multi-point thermal sensing probes with mounting brackets, suitable over a temperature range of minus 20 to 160 deg F and a velocity range between 0 to 5000 fpm.

2.9 THERMOSTATS

A. Available Manufacturers:

1. Delta Controls Inc.
2. Venstar
3. Viconics Electronics, Inc.

B. Specifications

1. LCD (Optional)

   a. 2-line custom segmented display with icons

2. Buttons

   a. 2 rows of 4 capacitive touch zones, allowing up to 8 individual buttons or combined to form larger buttons.

3. Backlight (Optional)

   a. Optional RGB LED backlight for multicolor LCD and button illumination

4. Temperature

   a. Digital Temperature Sensor +/- 0.2° C (+/- 0.36°F)

5. Humidity Sensor (Optional)

   a. Accuracy +/- 3%

6. CO2 Sensor (Optional)

   a. Dual Beam, Self Calibrating NDIR
   b. Detection Range: 0-2000 ppm
   c. Accuracy @ 77°F (25°C): ± (50ppm + 2% of value)
   d. Temperature Dependence: 2ppm/°C (1 ppm/ °F) typical
   e. Pressure Dependence: 0.13% of reading per mm Hg
   f. Stability: 20 ppm/year (typical)

7. Occupancy Sensor (Optional)

   a. Passive infrared motion (PIR) sensor Range: 5m (16.4 ft.)
   b. Coverage: 100° Horizontal

8. Inputs

a. 1 10kΩ input (16 bit A/D)

9. Description

a. The eZNS-T100 network sensor offers building occupants an intuitive touch-interface to adjust individual comfort levels while tailoring to the needs of their specific market. Featuring a standard temperature sensor with humidity, CO2 and motion options, the eZNS also offers a choice of backlit colors to provide additional user feedback and esthetic appeal.
b. The eZNS sensor's NFC technology allows installers to use NFC-enabled mobile devices to configure the eZNS and enable enteliWEB integration.

10. Application

a. The eZNS is suitable for a wide range of sensing applications, from basic temperature monitoring, to indoor air quality and occupancy sensing. A customizable interface allows for intuitive user interaction.
b. An available external input allows for additional zone monitoring such as window or door contact, temperature averaging or other dry contact sensor information.
c. When paired with an application controller, the eZNS supports advanced control strategies such as demand control ventilation, energy savings based on occupancy and optimal user comfort.

11. Features

a. RGB backlight allows choice of colors to indicate conditions, alarms and night mode.
b. Large easy-to-read LCD screen.
c. Onscreen visual feedback on button selection.
d. Capacitive touch zones allow custom button sizes.
e. Multiple button layout options. Simple one-touch buttons, or two-touch buttons for added functionality.
f. Slider to quickly adjust setpoint or tap for precise changes.
g. Fully programmable in GCL+.
h. USB Service port, software enabled or disabled. Service tool not required.
i. Smartphone and tablet integration and setup using NFC technology.
j. Recessed mount for minimal profile or surface mount backplate options.
k. Fits most electrical boxes worldwide.
l. 2-piece design with tamper set screw.

C. Combination Thermostat and Fan Switches: Line-voltage thermostat with push-button or lever-operated fan switch.

1. Label switches ["FAN ON-OFF"] ["FAN HIGH-LOW-OFF"] ["FAN HIGH-MED-LOW-OFF"].
2. Mount on single electric switch box.

D. Electric, solid-state, microcomputer-based room thermostat with remote sensor.

1. Automatic switching from heating to cooling.

2. Preferential rate control to minimize overshoot and deviation from set point.
3. Set up for four separate temperatures per day.
4. Instant override of set point for continuous or timed period from 1 hour to 31 days.
5. Short-cycle protection.
6. Programming based on [weekday, Saturday, and Sunday] [every day of week].
7. Selection features include degree F or degree C display, 12- or 24-hour clock, keyboard disable, remote sensor, and fan on-auto.
8. Battery replacement without program loss.
9. Thermostat display features include the following:

    a. Time of day.
    b. Actual room temperature.
    c. Programmed temperature.
    d. Programmed time.
    e. Duration of timed override.
    f. Day of week.
    g. System mode indications include "heating," "off," "fan auto," and "fan on."

E. Low-Voltage, On-Off Thermostats: 24-V, bimetal-operated, mercury-switch type, with adjustable or fixed anticipation heater, concealed set-point adjustment, 40 to 90 deg F set-point range, and 2 deg F maximum differential.

F. Line-Voltage, On-Off Thermostats: Bimetal-actuated, open contact or bellows-actuated, enclosed, snap-switch or equivalent solid-state type, with heat anticipator; listed for electrical rating; with concealed set-point adjustment, 55 to 85 deg F set-point range, and 2 deg F maximum differential.

1. Electric Heating Thermostats: Equip with off position on dial wired to break ungrounded conductors.
2. Selector Switch: Integral, manual on-off-auto.

G. Remote-Bulb Thermostats: On-off or modulating type, liquid filled to compensate for changes in ambient temperature; with copper capillary and bulb, unless otherwise indicated.

1. Bulbs in water lines with separate wells of same material as bulb.
2. Bulbs in air ducts with flanges and shields.
3. Averaging Elements: Copper tubing with either single- or multiple-unit elements, extended to cover full width of duct or unit; adequately supported.
4. Scale settings and differential settings are clearly visible and adjustable from front of instrument.
5. On-Off Thermostat: With precision snap switches and with electrical ratings required by application.
6. Modulating Thermostats: Construct so complete potentiometer coil and wiper assembly is removable for inspection or replacement without disturbing calibration of instrument.

H. Fire-Protection Thermostats: Listed and labeled by an NRTL acceptable to authorities having jurisdiction; with fixed or adjustable settings to operate at not less than 75 deg F above normal maximum operating temperature, and the following:

1. Reset: Manual.
2. Reset: Automatic, with control circuit arranged to require manual reset at central control panel; with pilot light and reset switch on panel labeled to indicate operation.

I. Immersion Thermostat: Remote-bulb or bimetal rod-and-tube type, proportioning action with adjustable throttling range and adjustable set point.

J. Electric, Low-Limit Duct Thermostat: Snap-acting, single-pole, single-throw, manual reset switch that trips if temperature is equal to or below set point.

1. Bulb Length: Minimum 20 feet.
2. Quantity: One thermostat for every 20 sq. ft. of coil surface.

K. Electric, High-Limit Duct Thermostat: Snap-acting, single-pole, single-throw, manual reset switch that trips if temperature is equal to or above set point.

1. Bulb Length: Minimum 20 feet.
2. Quantity: One thermostat for every 20 sq. ft. of coil surface.

2.10 HUMIDISTATS

A. Available Manufacturers:

1. DELTA.

B. Duct-Mounting Humidistats: Electric insertion, 2-position type with adjustable setpoint, humidity sensing range from 0 to 100 percent relative humidity, non-condensing, and single- or double-pole contacts.

2.11 ACTUATORS

A. Electronic Actuators:

1. Available Manufacturers:

a. Belimo Aircontrols (USA), Inc.
b. Bray Controls, A division of Bray International, Inc.

2. Valves: Size for torque required for valve close off at maximum pump differential pressure.
3. Dampers: Size for running torque calculated as follows:

a. Parallel-Blade Damper with Edge Seals: 7 inch-lb/sq. ft. of damper.
b. Opposed-Blade Damper with Edge Seals: 5 inch-lb/sq. ft. of damper.
c. Parallel-Blade Damper without Edge Seals: 4 inch-lb/sq. ft of damper.
d. Opposed-Blade Damper without Edge Seals: 3 inch-lb/sq. ft. of damper.

4. Coupling: V-bolt and V-shaped, toothed cradle.
5. Fail-Safe Operation: Mechanical, spring-return mechanism. Provide external manual override on non-spring-return actuators.
6. Power Requirements (Two-Position Spring Return): 24 or 120-V ac.

7. Power Requirements (Modulating): Maximum 10 VA at 24-V ac or 8 W at 24-V dc.
8. Proportional Signal: 2- to 10-V dc or 4 to 20 mA, and 2- to 10-V dc position feedback signal as an option.
9. Run Time: 90 to 120 seconds.
10. Economizer Outdoor-Air Damper Operation:

    a. Manufactured, brand labeled or distributed by BELIMO.
    b. Economizer shall be capable of single dry bulb, differential dry bulb, single enthalpy or differential enthalpy control strategy, as required, per ASHRAE 90.1. Sensing devices shall be non-proprietary.
    c. ASHRAE Climate Zone selection for high limit setting shall be through entry of the installed location zip code through the MMI without the use of printed documentation.
    d. The device shall incorporate brownout protection that will prevent the compressors from operating in low voltage conditions while remaining in control. Upon startup from a brownout or blackout condition the unit shall provide automatic random on to prevent electrical surge from multiple compressor starting.
    e. Alarms for fault detection and diagnostics shall be indicated by both a visual LED indicator and text description accessible through the MMI. Current and historical alarms (including elapsed time since occurance) shall be accessible via the MMI. Upon sensor failure the economizer shall automatically detect the proper economizer sequence to maintain control.
    f. Device shall be compliant with the latest version of the following energy codes: ASHRAE 90.1, CA Title 24, and NECB.
    g. The manufacturer shall warrant all components for a period of 5 years from the date of production, with the first two years unconditional.
    h. Occupied Periods.
    i. Open to [10] [25] <Insert percent>percent fixed minimum intake and maximum 100 percent of the fan capacity to comply with ASHRAE 90.1. Controller shall permit air side economizer operation when outdoor air is below the outdoor air temperature/enthalpy as determined by entry of the installed location zip code on the integrated display.
    j. Economizer dampers shall be capable of being sequenced with the mechanical cooling system and be capable of providing a partial cooling load with the mechanical cooling.
    k. The outdoor air intake minimum position shall automatically reduce upon reaching a predetermined high limit setpoint. When outdoor air is 100% and the mechanical cooling is enabled the outdoor air damper shall close to reduce freeze conditions if required.
    l. Unoccupied Periods.
    m. Close outdoor air damper and open return air damper.
    n. Carbon Dioxide Sensor Operation.
    o. Occupied Periods. Reset minimum outdoor air down to minimum [10] <Insert percent> percent to maintain maximum concentration per ASHRAE 90.1
    p. Unoccupied Periods: Close outdoor air damper and open return air damper.]

2.12 CONTROL VALVES

A. Available Manufacturers:

1. Belimo Aircontrols (USA), Inc.

B. Energy Control Valves: Factory fabricated, of type body material, and pressure class based on maximum pressure and temperature rating of piping system, unless otherwise indicated. Electronic pressure independent control valve by Belimo Controls complete with mag/ultra flow-meter, temperature sensors, N2 communication, smart control capabilities to maintain automatic modulating controlled flow and coil design temperature differential.

1. NPS 2 and Smaller: Forged brass body rated at no less than 250 PSI, stainless steel ball and stem, female NPT union ends, dual EPDM lubricated O-rings and a brass or TEFZEL characterizing disc.
2. NPS 2-1/2 through 6: GG25 cast iron body according to ANSI Class 125, standard class B, stainless steel ball and blowout proof stem, flange to match ANSI 125 with a dual EPDM O-ring packing design, PTFE seats, and a stainless steel flow characterizing disc.
3. Accuracy: The control valves shall accurately control the flow from 0 to 100% rated flow with an operating pressure differential range of 5 to 50 PSI differential across the valve with a valve body flow accuracy of +/- 5 total assembly error incorporating differential pressure fluctuation, manufacturing tolerances and valve hysteresis
4. Flow Characteristics: Equal percentage characteristic.
5. All actuators shall be capable of being electronically programmed in the field by use of external computer software or a dedicated handheld tool for the adjustment of flow. Programming using actuator mounted switches or multi-turn actuators are not acceptable.
6. [Water coil optimization shall be accomplished by utilizing a pressure independent control valve assembly; two temperature sensors providing feedback of coil inlet and outlet water temperatures; and an electronic flow meter to provide analog flow feedback. Software shall control the valve to avoid the coil differential temperature from falling below a programmed set point, The valve assembly shall be capable of accepting an analog signal representing the coil power required. Real-time data and configuration of valve operating parameters shall be available by means of BACnet MS/TP, BACnet/IP or HTTP. Monitored points shall include, but not be limited to inlet and outlet coil water temperatures, absolute flow, absolute valve position, absolute coil power and total heating/cooling energy in BTU/hr. Configuration points shall include but not be limited to valve, flow, and power settings. Historical trend data shall be stored for up to 13 months and be retrievable in a standard time-stamped format.]
7. The manufacturer shall provide a published commissioning procedure following the guidelines of the National Environmental Balancing Bureau (NEBB) and the Testing Adjusting Balancing Bureau (TABB).
8. A wet calibrated electronic flow meter shall provide dynamic feedback to measure flow and verify performance.
9. The control valve shall require no maintenance and shall not include replaceable cartridges.

C. Hydronic system characterized control valves (CCV) shall have the following characteristics:

1. NPS 2 and Smaller: Forged brass or bronze body, stainless steel ball, blow-out resistant stem, dual seal packing design, reinforced PTFE seats, flow characterizing disc and screwed ends.
2. NPS 2-1/2 to 3": ANSI Class 125 iron body, stainless steel ball and blow-out resistant stem, dual seal packing design, flanged ends, and renewable PTFE seat and disc.
3. Flow Characteristics: Two-way valves shall have equal percentage characteristics; three-way valves shall have linear characteristics.
4. Close-Off Pressure Rating: Combination of actuator and trim shall provide minimum close-off pressure of 200 psi for 1/2"-2" sizes and 100 psi for 2"-3" sizes.
5. Maximum Differential Pressure Across Valve (Range): 30 psid.

D. Hydronic system pressure independent characterized control valves (PICCV) shall have the following characteristics:

1. NPS 2 and Smaller: Two-way forged brass or bronze body, plated brass ball and stem, characterizing disc and screwed ends.
2. Internal Construction: Reinforced PTFE seats, lubricated packing, synthetic diaphragm, stainless steel, brass, or thermoplastic regulator components, and stainless steel spring
3. Flow Rates: 0.5 to 100 gallons per minute.
4. Flow Characteristics: Two-way valves shall have equal percentage characteristics.
5. Close-Off Pressure Rating: 200 psi.
6. Maximum Differential Pressure Across Valve (Range): 5 to 50 psid.

E. Hydronic system globe valves shall have the following characteristics:

1. 2" and Smaller: ANSI Class 250 bronze body, stainless steel stem, brass plug, bronze seat, a TFE packing, and female threaded ends.
2. 2-1/2" and Larger: ANSI Class 125 or 250 cast iron body, stainless steel stem, bronze plug, bronze seat, a TFE V-ring packing, and flanged end connections..
3. Flow Characteristics: Two-way valves shall have equal percentage characteristics; three-way valves shall have linear characteristics.
4. Close-Off (Differential) Pressure Rating: ½" - 2" 35 psid, 21/2" - 6" 25 psid or 50 psid.

F. Butterfly Valves: 150-psig maximum pressure differential, ASTM A 126 cast-iron or ASTM A 536 ductile-iron body and bonnet, extended neck, stainless-steel stem, field-replaceable EPDM or Buna N sleeve and stem seals.

1. Body Style: One-piece Lug.
2. Disc Type: Type 304 stainless steel
3. Body Pressure: 250 psi.

2.13 CONTROL CABLE

A. Electronic and fiber-optic cables for control wiring are specified in Section 27 10 00 "Structured Cable System."

PART 3 - EXECUTION

3.1 EXAMINATION

A. Verify that power is available to control units and operator workstation.

B. Verify that duct-, pipe-, and equipment-mounted devices are installed before proceeding with installation.

3.2 PROTECTION

A. Provide protection against damage to work and material caused by Contractor's work or employees. All damages incurred will be assessed as outlined in Division 01.

B. Protect material not immediately installed. Close open ends of work with temporary covers or plugs during storage and construction to prevent entry of foreign objects.

3.3 INSTALLATION

A. Install software in control units and operator workstation(s). Implement all features of programs to specified requirements and as appropriate to sequence of operation.

B. Connect and configure equipment and software to achieve sequence of operation specified.

C. Verify location of thermostats, humidistats, and other exposed control sensors with Drawings and room details before installation. Install devices 48 inches above the floor.

1. Install averaging elements in ducts and plenums in crossing or zigzag pattern.

D. Install guards on thermostats or lock room sensor LCD display with buttons in the following locations:

1. Entrances.
2. Public areas.
3. Where indicated.

E. Install automatic dampers according to Section 23 33 00 "Air Duct Accessories."

F. Install damper motors on outside of duct in warm areas, not in locations exposed to outdoor temperatures.

G. Install labels and nameplates to identify control components according to Section 23 05 53 "Identification for HVAC Piping and Equipment."

H. Install hydronic instrument wells, valves, and other accessories according to Section 23 21 13 "Hydronic Piping."

I. Install steam and condensate instrument wells, valves, and other accessories according to Section 23 22 13 "Steam and Condensate Heating Piping."

J. Install refrigerant instrument wells, valves, and other accessories according to Section 23 23 00 "Refrigerant Piping."

K. Install duct volume-control dampers according to Section 23 31 13 "Metal Ducts" and Section 23 31 16 "Nonmetal Ducts."

L. Install electronic and fiber-optic cables according to Section 27 10 00 "Structured Cable System."

3.4 COORDINATION

A. Submittals: See Division 01.

B. Test and Balance:

1. Provide a single set of necessary tools to interface with control system for testing and balancing.
2. Train Test and Balance Contractor to use system interface tools.
3. Provide a qualified technician to assist with testing and balancing the first 4 terminal units.
4. At completion of test and balance, Test and Balance Contractor shall return tools undamaged and in working condition.

C. Life Safety:

1. Fire and smoke damper actuators required provided under Section 23 33 00 "Air Duct Accessories" Damper control provided under Division 28.

D. Other Control Systems: Integrate and coordinate with control devices and systems furnished or installed by others as follows:

1. Communication media and equipment shall be provided as specified in Divisions 27 & 28.
2. Each supplier of a control system shall configure, program, start and test their system or products to meet the Sequence of Operation.
3. Resolve incompatibility issues with other control systems or products as required to meet the Sequence of Operation.
4. Integrate control products as describe within the Contract Documents.

3.5 ELECTRICAL WIRING AND CONNECTION INSTALLATION

A. Install raceways, boxes, and cabinets according to Section 26 05 00 "Basic Materials and Methods" and Section 26 11 00 "Conduits and Raceways."

B. Install building wire and cable according to Section 26 12 00 "Low-Voltage Wires."

C. Install signal and communication cable according to Section 27 10 00 "Structured Cabling System."

1. Conceal cable, except in mechanical rooms and areas where other conduit and piping are exposed.
2. Install exposed cable in raceway where subject to mechanical damage and at levels below 10ft in mechanical, electrical, or service rooms
3. Install UL listed cable where exposed in attics or plenums.
4. Use structural members to support or anchor plenum cables without raceway.
5. Secure raceways with raceway clamps fastened to structure and spaced according to code requirements. Raceways and pull boxes shall not be hung on or attached to ductwork, electrical raceways, piping, or ceiling suspension system.
6. Bundle and harness multiconductor instrument cable in place of single cables where several cables follow a common path.
7. Make wiring splices in listed junction box. Provide means of protecting the wire/cable jacket from wear when penetrating the junction box with chase nipple, plastic grommet or clamp style connector.
8. Provide 300 VAC or greater rated wire entering motor control sensors, combination motor starters, etc.
9. Number-code or color-code conductors for future identification and service of control system, except local individual room control cables.
10. Install wire and cable with sufficient slack and flexible connections to allow for vibration of piping and equipment.

D. Install sensors according to manufacturer's recommendations.

1. Mount sensors rigidly and adequately for operating environment.
2. Install sensors with averaging tubing in a serpentine manner vertically across airflow cross-section using capillary clips for support.

E. Connect manual-reset limit controls independent of manual-control switch positions. Automatic duct heater resets may be connected in interlock circuit of power controllers.

F. Connect hand-off-auto selector switches to override automatic interlock controls when switch is in hand position.

3.6 IDENTIFICATION AND LABELING

A. Label wiring and cabling, and pneumatic tubing.

1. Wires and cables - Label at each end within 6 inches of termination.

B. Label control panels with minimum ½ inch letters on laminated plastic nameplates.

1. Label each control component and plug-in components.

C. Warning Labels

1. Affix permanent warning labels to motor starter and control panels that are connected to multiple power sources utilizing separate disconnects.

3.7 FIELD QUALITY CONTROL

A. Manufacturer's Field Service: Engage a factory-authorized service representative to inspect, test, and adjust field-assembled components and equipment installation, including connections.

B. Perform the following field tests and inspections and prepare test reports:

1. Operational Test: After electrical circuitry has been energized, start units to confirm proper unit operation. Remove and replace malfunctioning units and retest.
2. Test and adjust controls and safeties.
3. Leak Test: After installation, charge system and test for leaks. Repair leaks and retest until no leaks exist.
4. Test each point through its full operating range to verify that safety and operating control set points are as required.
5. Test each control loop to verify stable mode of operation and compliance with sequence of operation. Adjust PID actions.
6. Test each system for compliance with sequence of operation.
7. Test software and hardware interlocks.

C. DDC Verification:

1. Verify that instruments are installed before calibration, testing, and loop or leak checks.
2. Check instruments for proper location and accessibility.
3. Check instrument installation for direction of flow, elevation, orientation, insertion depth, and other applicable considerations.
4. Check flow instruments. Inspect tag number and line and bore size and verify that inlet side is identified and that meters are installed correctly.
5. Check pressure instruments, piping slope, installation of valve manifold, and self-contained pressure regulators.
6. Check temperature instruments and material and length of sensing elements.
7. Check control valves. Verify that they are in correct direction.
8. Check dampers. Verify proper blade alignment, either parallel or opposed, has been provided.
9. Check DDC system as follows:

    a. Verify that DDC controller power supply is from emergency power supply, if applicable.
    b. Verify that wires at control panels are tagged with their service designation and approved tagging system.
    c. Verify that spare I/O capacity has been provided, if applicable.

D. Replace damaged or malfunctioning controls and equipment and repeat testing procedures.

3.8 ADJUSTING

A. Calibrating and Adjusting:

1. Calibrate instruments which require field calibration.
2. Make three-point calibration test for both linearity and accuracy for each analog instrument.
3. Calibrate equipment and procedures using manufacturer's written recommendations and instruction manuals
4. Control System Inputs and Outputs:

    a. Check analog inputs at 0, 50, and 100 percent of span for 0-5/10VDC or 4-20m analog inputs.
    b. Check analog outputs using milliampere meter at 0, 50, and 100 percent output.
    c. Check digital inputs using jumper wire.
    d. Check digital outputs using ohmmeter to test for contact making or breaking.
    e. Check resistance temperature inputs with hand held calibrated testing equipment.

5. Flow:

    a. Set differential pressure flow transmitters for 0 and 100 percent values with 3-point calibration accomplished at 0, 50, and 100 percent of span.
    b. Manually operate flow switches to verify that they make or break contact.

6. Pressure:

    a. Calibrate pressure transmitters at 0, 50, and 100 percent of span.
    b. Calibrate pressure switches to make or break contacts, with adjustable differential set at minimum.

7. Temperature:

    a. Calibrate resistance temperature transmitters at 0, 50, and 100 percent of span using a precision-resistance source.
    b. Calibrate temperature switches to make or break contacts.

8. Stroke and adjust control valves and dampers that are 2 positions, following the manufacturer's recommended procedure, so that valve or damper is 100 percent open and closed.
9. Stroke and adjust control valves and dampers that are proportional, following manufacturer's recommended procedure, so that valve and damper is 0, 50, and 100 percent closed.
10. Provide diagnostic and test instruments for calibration and adjustment of system.

B. Adjust initial temperature and humidity set points, if required.

3.9 TRAINING

A. Engage a factory-authorized service representative to train Owner's maintenance personnel to adjust, operate, and maintain HVAC instrumentation and controls. Refer to Division 01.

B. Training shall enable students to accomplish the following objectives:

1. Proficiently operate system.
2. Understand control system architecture and configuration.
3. Understand DDC system components.
4. Understand system operation, including DDC system control and optimizing routines (algorithms)
5. Operate workstation and peripherals
6. Log on and off system
7. Access graphics, point reports, and logs
8. Adjust and change system setpoints, time schedules, and holiday schedules
9. Recognize common HVAC system malfunctions by observing system graphics, trend graphs, and other system tools
10. Understand system drawings and Operation and Maintenance manual
11. Understand job layout and location of control components
12. Access data from DDC controllers
13. Operate portable operator's terminals
14. Create and change system graphics
15. Create, delete, and modify alarms, including configuring alarm reactions
16. Create, delete, and modify point trend logs (graphs) and multi-point trend graphs
17. Configure and run reports
18. Add, remove, and modify system's physical points
19. Create, modify, and delete application programming
20. Add operator interface stations
21. Add a new controller to system
22. Download firmware and advanced applications programming to a controller
23. Configure and calibrate I/O points
24. Maintain software and prepare backups
25. Interface with job-specific, third-party operator software
26. Add new users and understand password security procedures

C. Divide presentation of objectives into three sessions (1-13, 14-23, and 24-26). Participants will attend one or more of sessions, depending on knowledge level required.

1. Day-to-day Operators (objectives 1-13)
2. Advanced Operators (objectives 1-13 and 14-23)
3. System Managers and Administrators (objectives 1-13 and 24-26)

END OF SECTION

SECTION 23 23 00

REFRIGERANT PIPING

PART 1 - GENERAL

1.1 SUMMARY

A. Section Includes:

1. Refrigerant piping.
2. Unions, flanges, and couplings.
3. Pipe hangers and supports.
4. Refrigerant moisture and liquid indicators.
5. Valves.
6. Refrigerant filter-driers.
7. Refrigerant expansion valves.
8. Electronic expansion valves.

B. Related Sections:

1. Section 05 12 00 - Structural Steel Framing: Product requirements for touch-up painting of structural steel.
2. Section 05 21 00 - Steel Joist Framing: Product requirements for touch-up painting of steel joists.
3. Section 07 84 00 - Firestopping: Product requirements for firestopping for placement by this section.
4. Section 08 31 13 - Access Doors and Frames: Access doors for concealed valves and accessories.
5. Section 09 90 00 - Painting and Coating: Product requirements for painting for placement by this section.
6. Section 23 05 03 - Pipes and Tubes for HVAC Piping and Equipment: Piping materials for refrigerant systems.
7. Section 23 05 29 - Hangers and Supports for HVAC Piping and Equipment: Product requirements for pipe hangers and supports, sleeves, [and firestopping] for placement by this section.
8. Section 23 05 48 - Vibration and Seismic Controls for HVAC Piping and Equipment: Product requirements for Vibration Isolation for placement by this section.
9. Section 23 05 53 - Identification for HVAC Piping and Equipment: Product requirements for pipe identification for placement by this section.
10. Section 23 07 00 - HVAC Insulation: Product requirements for Piping Insulation for placement by this section.
11. Section 26 05 03 - Equipment Wiring Connections: Execution requirements for electric connections specified by this section.

1.2 REFERENCES

A. Air-Conditioning and Refrigeration Institute:

1. ARI 495 - Refrigerant Liquid Receivers.
2. ARI 710 - Liquid-Line Driers.
3. ARI 730 - Flow-Capacity Rating and Application of Suction-Line Filters and Filter Dryers.
4. ARI 750 - Thermostatic Refrigerant Expansion Valves.

B. American Society of Heating, Refrigerating and Air-Conditioning Engineers:

1. ASHRAE 15 - Safety Code for Mechanical Refrigeration.

C. American Society of Mechanical Engineers:

1. ASME B16.22 - Wrought Copper and Copper Alloy Solder Joint Pressure Fittings.
2. ASME B16.26 - Cast Copper Alloy Fittings for Flared Copper Tubes.
3. ASME B31.5 - Refrigeration Piping.
4. ASME Section VIII - Boiler and Pressure Vessel Code - Pressure Vessels.

D. ASTM International:

1. ASTM A53/A53M - Standard Specification for Pipe, Steel, Black and Hot-Dipped, Zinc-Coated, Welded and Seamless.
2. ASTM A234/A234M - Standard Specification for Piping Fittings of Wrought Carbon Steel and Alloy Steel for Moderate and High Temperature Service.
3. ASTM B88 - Standard Specification for Seamless Copper Water Tube.
4. ASTM B280 - Standard Specification for Seamless Copper Tube for Air Conditioning and Refrigeration Field Service.
5. ASTM F708 - Standard Practice for Design and Installation of Rigid Pipe Hangers.

E. American Welding Society:

1. AWS A5.8 - Specification for Filler Metals for Brazing and Braze Welding.
2. AWS D1.1 - Structural Welding Code - Steel.

F. Manufacturers Standardization Society of the Valve and Fittings Industry:

1. MSS SP 58 - Pipe Hangers and Supports - Materials, Design and Manufacturer.
2. MSS SP 69 - Pipe Hangers and Supports - Selection and Application.
3. MSS SP 89 - Pipe Hangers and Supports - Fabrication and Installation Practices.

1.3 SYSTEM DESCRIPTION

A. Where more than one piping system material is specified, provide compatible system components and joints. Use non-conducting dielectric connections when joining dissimilar metals in systems.

B. Provide flanges, unions, or couplings at locations requiring servicing. Use unions, flanges, or couplings downstream of valves and at equipment connections. Do not use direct welded or threaded connections to valves or equipment.

C. Provide pipe hangers and supports in accordance with ASME B31.5.

D. Flexible Connectors: Use at or near compressors where piping configuration does not absorb vibration.

1.4 SUBMITTALS

A. Section 01 33 00 - Submittal Procedures: Submittal procedures.

B. Shop Drawings: Indicate layout of refrigeration piping system, including equipment, critical dimensions, and sizes.

C. Product Data:

1. Piping: Submit data on pipe materials, fittings, and accessories.
2. Valves: Submit manufacturers catalog information with valve data and ratings for each service.
3. Hangers and Supports: Submit manufacturers catalog information including load capacity.
4. Refrigerant Specialties: Submit manufacturers catalog information including capacity, component sizes, rough-in requirements, and service sizes for the following:

    a. Refrigerant moisture and liquid indicators.
    b. Refrigerant strainers.
    c. Refrigerant filter-driers.
    d. Refrigerant expansion valves.
    e. Electronic expansion valves.

D. Design Data: Indicate pipe size. Indicate load carrying capacity of trapeze, multiple pipe, and riser support hangers.

E. Test Reports: Indicate results of piping system pressure test.

F. Manufacturer's Installation Instructions: Submit hanging and support methods, joining procedures and isolation.

G. Welders Certificates: Certify welders employed on the Work, verifying AWS qualification within previous 12 months.

1.5 CLOSEOUT SUBMITTALS

A. Section 01 73 00 – Execution Requirements and Section 01 77 00 – Closeout Requirements: Closeout procedures.

B. Project Record Documents: Record actual locations of valves, equipment and refrigerant accessories.

C. Operation and Maintenance Data: Submit instructions for installation and changing components, spare parts lists, exploded assembly views.

1.6 QUALITY ASSURANCE

A. Perform Work in accordance with ASME B31.5 code for installation of refrigerant piping systems.

B. Perform Work in accordance with applicable code and authority having jurisdiction for welding hanger and support attachments to building structure.

C. Maintain one copy of document on site.

1.7 QUALIFICATIONS

A. Manufacturer: Company specializing in manufacturing products specified in this section with minimum three years documented experience.

B. Fabricator or Installer: Company specializing in performing Work of this section with minimum three years documented experience.

1.8 PRE-INSTALLATION MEETINGS

A. Section 01 31 00 – Project Management and Coordination: Pre-installation meeting.

B. Convene minimum one week prior to commencing work of this section.

1.9 DELIVERY, STORAGE, AND HANDLING

A. Section 01 61 00 - Product Requirements: Product storage and handling requirements.

B. Dehydrate and charge refrigeration components including piping and receivers, seal prior to shipment. Maintain seal until connected into system.

C. Accept valves on site in shipping containers with labeling in place. Inspect for damage.

D. Provide temporary end caps and closures on piping and fittings. Maintain in place until installation.

E. Protect piping systems from entry of foreign materials by temporary covers, completing sections of the Work, and isolating parts of completed system.

1.10 ENVIRONMENTAL REQUIREMENTS

A. Section 01 61 00 - Product Requirements.

1.11 FIELD MEASUREMENTS

A. Verify field measurements prior to fabrication.

1.12 COORDINATION

A. Section 01 31 00 – Project Management and Coordination: Requirements for coordination.

1.13 WARRANTY

A. Section 01 73 00 – Execution Requirements and Section 01 77 00 – Closeout Requirements: Product warranties and product bonds.

B. Furnish five year manufacturer warranty for valves excluding packing.

1.14 MAINTENANCE MATERIALS

A. Section 01 73 00 – Execution Requirements and Section 01 77 00 – Closeout Requirements: Spare parts and maintenance products.

1.15 EXTRA MATERIALS

A. Section 01 70 00 - Execution and Closeout Requirements: Spare parts and maintenance products.

B. Furnish two packing kits for each size and valve type.

C. Furnish two refrigerant filter-dryer cartridges of each type.

PART 2 - PRODUCTS

2.1 REFRIGERANT PIPING

A. Copper Tubing: ASTM B280, drawn.

1. Fittings: ASME B16.22 wrought copper.
2. Joints: Braze, AWS A5.8 BCuP silver/phosphorus/copper alloy with melting range 1190 to 1480 degrees F.

2.2 UNIONS, FLANGES, AND COUPLINGS

A. 2 inches and Smaller:

1. Ferrous Piping: 150 psig malleable iron, threaded.
2. Copper Pipe: Bronze, soldered joints.

B. 2-1/2 inches and Larger:

1. Ferrous Piping: 150 psig forged steel, slip-on.
2. Copper Piping: Bronze.
3. Gaskets: 1/16 inch thick preformed neoprene.

C. Dielectric Connections: Union with galvanized or plated steel threaded end, copper solder end, water impervious isolation barrier.

2.3 PIPE HANGERS AND SUPPORTS

A. Manufacturers:

1. B-Line Systems.
2. Anvil.
3. Tolco.
4. Substitutions: Section 01 61 00 - Product Requirements.

B. Conform to ASME B31.5.

C. Hangers for Pipe Sizes 1/2 to 1-1/2 inch: Malleable iron, adjustable swivel, split ring.

D. Hangers for Cold Pipe Sizes 2 inches and Larger: Carbon steel, adjustable, clevis.

E. Multiple or Trapeze Hangers: Steel channels with welded spacers and hanger rods.

F. Wall Support for Pipe Sizes 3 inches and Smaller: Cast iron hooks.

G. Vertical Support: Steel riser clamp.

H. Floor Support for Cold Pipe: Cast iron adjustable pipe saddle, lock nut, nipple, floor flange, and concrete pier or steel support.

I. Copper Pipe Support: Carbon steel rings, adjustable, copper plated.

J. Hanger Rods: Mild steel threaded both ends, threaded one end, or continuous threaded.

K. Inserts: Malleable iron case of galvanized steel shell and expander plug for threaded connection with lateral adjustment, top slot for reinforcing rods, lugs for attaching to forms; size inserts to suit threaded hanger rods.

2.4 REFRIGERANT MOISTURE AND LIQUID INDICATORS

A. Manufacturers:

1. Alco Controls Div, Emerson Electric Co.
2. Parker Hannifin Corp., Refrig. & Air Cond. Div.
3. Sporlan Valve Co.
4. Substitutions: Section 01 61 00 - Product Requirements.

B. Indicators:

1. Port: Single, UL listed.
2. Body: Copper or brass, flared or solder ends.
3. Sight glass: Color-coded paper moisture indicator with removable element cartridge and plastic cap.
4. Maximum working pressure: 500 psig
5. Maximum working temperature: 200 degrees F.

2.5 VALVES

A. Manufacturers:

1. Alco Controls Div, Emerson Electric Co.
2. Parker Hannifin Corp., Refrig. & Air Cond. Div.
3. Sporlan Valve Co.
4. Substitutions: Section 01 61 00 - Product Requirements.

B. Diaphragm Packless Valves:

1. UL listed, globe or angle pattern, forged brass body and bonnet solder or flared ends.
2. Phosphor bronze and stainless steel diaphragms, rising stem and hand wheel.
3. Stainless steel spring, nylon seats, disc with positive back seating.
4. Maximum working pressure: 500 psig.
5. Maximum working temperature: 275 degrees F.

C. Packed Angle Valves:

1. Forged brass, solder or flared ends.
2. Forged brass seal caps with copper gasket, rising stem and seat [with back seating], molded stem packing.
3. Maximum working pressure: 500 psig.
4. Maximum working temperature: 275 degrees F.

D. Ball Valves:

1. Two piece forged brass body with teflon ball seals and copper tube extensions, brass seal cap, chrome plated ball, stem with neoprene ring stem seals, soldered or threaded ends.
2. Maximum working pressure: 500 psig.
3. Maximum working temperature: 325 degrees F.

E. Service Valves:

1. Forged brass body with copper stubs, brass caps, removable valve core, integral ball check valve, flared or solder ends.
2. Maximum working pressure: 500 psig.

F. Refrigerant Check Valves:

1. Manufacturers:

a. Alco Controls Div, Emerson Electric Co.
b. Parker Hannifin Corp., Refrig. & Air Cond. Div.
c. Sporlan Valve Co.
d. Substitutions: Section 01 61 00 - Product Requirements.

2.6 REFRIGERANT STRAINERS

A. Manufacturers:

1. Alco Controls Div, Emerson Electric Co.
2. Parker Hannifin Corp., Refrig. & Air Cond. Div.
3. Sporlan Valve Co.
4. Substitutions: Section 01 61 00 - Product Requirements.

B. Straight Line or Angle Line Type:

1. Brass or steel shell, steel cap and flange, and replaceable cartridge, with screen of stainless steel wire or monel reinforced with brass.
2. Maximum working pressure: 430 psig.

C. Straight Line, Non-Cleanable Type:

1. Steel shell, copper plated fittings, stainless steel wire screen.
2. Maximum working pressure: 500 psig.

2.7 REFRIGERANT FILTER-DRIERS

A. Manufacturers:

1. Alco Controls Div, Emerson Electric Co.
2. Parker Hannifin Corp., Refrig. & Air Cond. Div.
3. Sporlan Valve Co.
4. Substitutions: Section 01 61 00 - Product Requirements.

B. Replaceable Cartridge Angle Type:

1. Shell: ARI 710, UL listed, steel, removable cap, for maximum working pressure of 500 psig, inches outside diameter size connections.
2. Filter Cartridge: Pleated media with integral end rings, stainless steel support.
3. Filter/Dryer Cartridge: Pleated media with solid core sieve with activated alumina.
4. Wax Removal Cartridge: Molded bonded core of activated charcoal with integral gaskets.

C. Permanent Straight Through Type:

1. ARI 710, UL listed, steel shell with molded desiccant filter core, for maximum working pressure of 500 psig.

2.8 REFRIGERANT EXPANSION VALVES

A. Manufacturers:

1. Alco Controls Div, Emerson Electric Co.
2. Parker Hannifin Corp., Refrig. & Air Cond. Div.
3. Sporlan Valve Co.
4. Substitutions: Section 01 61 00 - Product Requirements.

B. Angle or Straight Through Type: ARI 750; design suitable for refrigerant, brass body, internal or external equalizer, mechanical pressure limit (maximum operating pressure MOP feature), adjustable superheat setting, replaceable inlet strainer, with replaceable capillary tube and remote sensing bulb.

C. Selection: Evaluate refrigerant pressure drop through system to determine available pressure drop across valve. Select valve for maximum load at design operating pressure and minimum 10 degrees F superheat. Select to avoid being undersized at full load and oversized at part load.

PART 3 - EXECUTION

3.1 EXAMINATION

A. Section 01 31 00 – Project Management and Coordination: Coordination and project conditions.

3.2 PREPARATION

A. Ream pipe and tube ends. Remove burrs.

B. Remove scale and dirt on inside and outside before assembly.

C. Prepare piping connections to equipment with flanges or unions.

D. Keep open ends of pipe free from scale and dirt. Protect open ends with temporary plugs or caps.

3.3 INSTALLATION - INSERTS

A. Provide inserts for placement in concrete forms.

B. Provide inserts for suspending hangers from reinforced concrete slabs and sides of reinforced concrete beams.

C. Provide hooked rod to concrete reinforcement section for inserts carrying pipe 4 inches and larger.

D. Where concrete slabs form finished ceiling, locate inserts flush with slab surface.

E. Where inserts are omitted, drill through concrete slab from below and provide through-bolt with recessed square steel plate and nut recessed into and grouted flush with slab.

3.4 INSTALLATION - PIPE HANGERS AND SUPPORTS

A. Install hangers and supports in accordance with ASME B31.5.

B. Support horizontal piping hangers as scheduled.

C. Install hangers to provide minimum 1/2 inch space between finished covering and adjacent work.

D. Place hangers within 12 inches of each horizontal elbow.

E. Install hangers to allow 1-1/2 inch minimum vertical adjustment. Design hangers for pipe movement without disengagement of supported pipe.

F. Support vertical piping at every floor. Support riser piping independently of connected horizontal piping.

G. Where installing several pipes in parallel and at same elevation, provide multiple pipe hangers or trapeze hangers.

H. Provide copper plated hangers and supports for copper piping.

I. Prime coat exposed steel hangers and supports in accordance with Section 09 90 00. Finish paint exposed steel hangers and supports in accordance with Section 09 90 00. Hangers and supports located in crawl spaces, pipe shafts, and suspended ceiling spaces are not considered exposed.

J. Provide clearance in hangers and from structure and other equipment for installation of insulation and access to valves and fittings.

3.5 INSTALLATION - ABOVE GROUND PIPING SYSTEMS

A. Route piping parallel to building structure and maintain gradient.

B. Install piping to conserve building space, and not interfere with use of space.

C. Group piping whenever practical at common elevations.

D. Sleeve pipe passing through partitions, walls and floors. Refer to Section 23 05 29.

E. Install pipe identification in accordance with Section 23 05 53.

F. Install piping to allow for expansion and contraction without stressing pipe, joints, or connected equipment.

G. Provide access where valves and fittings are not exposed. Coordinate size and location of access doors with Section 08 31 13.

H. Arrange refrigerant piping to return oil to compressor. Provide traps and loops in piping, and provide double risers as required. Slope horizontal piping 0.40 percent in direction of flow.

I. Flood refrigerant piping system with nitrogen when brazing.

J. Where pipe support members are welded to structural building framing, scrape, brush clean, and apply one coat of zinc rich primer to welds. Refer to Section.

K. Prepare unfinished pipe, fittings, supports, and accessories, ready for finish painting. Refer to Section 09 90 00.

L. Install valves with stems upright or horizontal, not inverted.

M. Insulate piping and equipment; refer to Section 23 07 00.

N. Provide replaceable cartridge filter-dryers, with isolation valves and bypass with valve.

O. Locate expansion valve sensing bulb immediately downstream of evaporator on suction line.

P. Provide external equalizer piping on expansion valves with refrigerant distributor connected to evaporator.

Q. Install flexible connectors at right angles to axial movement of compressor, parallel to crankshaft.

R. Fully charge completed system with refrigerant after testing.

S. Follow ASHRAE 15 procedures for charging and purging of systems and for disposal of refrigerant.

T. Install refrigerant piping in accordance with ASME B31.5.

3.6 INSTALLATION - REFRIGERANT SPECIALTIES

A. Refrigerant Liquid Indicators:

1. Install line size liquid indicators in main liquid line downstream of condenser.
2. When receiver is provided, install line size liquid indicators in liquid line downstream of receiver.
3. Install line size liquid indicators downstream of liquid solenoid valves.

B. Refrigerant Valves:

1. Install service valves on compressor suction and discharge.
2. Install gage taps at compressor inlet and outlet.
3. Install gage taps at hot gas bypass regulators, inlet and outlet.
4. Install check valves on compressor discharge.
5. Install check valves on condenser liquid lines on multiple condenser systems.
6. Install refrigerant charging valve in liquid line between receiver shut-off valve and expansion valve.

C. Strainers:

1. Install line size strainer upstream of each automatic valve.
2. Where multiple expansion valves with integral strainers are used, install single main liquid-line strainer.
3. On steel piping systems, install strainer in suction line.
4. Install shut-off valves on each side of strainer.

D. Filter-Dryers:

1. Install permanent filter-dryers in low temperature systems.
2. Install permanent filter-dryer in systems containing hermetic compressors.
3. Install replaceable cartridge filter-dryer vertically in liquid line adjacent to receivers.
4. Install replaceable cartridge filter-dryer upstream of each solenoid valve.

3.7 FIELD QUALITY CONTROL

A. Section 01 73 00 – Execution Requirements and Section 01 77 00 – Closeout Requirements: Field inspecting, testing, adjusting, and balancing.

B. Test refrigeration system in accordance with ASME B31.5.

C. Pressure test refrigeration system with dry nitrogen to 200 psig. Perform final tests at 27 inches vacuum and 200 psig using electronic leak detector.

D. Repair leaks.

E. Retest until no leaks are detected.

3.8 SCHEDULES

A. Pipe Hanger Spacing:

PIPE SIZE Inches	COPPER TUBING MAXIMUM HANGER SPACING Feet	MINIMUM HANGER ROD DIAMETER COPPER TUBING Inches	MINIMUM HANGER ROD DIAMETER STEEL PIPE Inches
1/2	5	3/8	3/8
3/4	5	3/8	3/8
1	6	3/8	3/8
1-1/4	7	3/8	3/8
1-1/2	8	3/8	3/8
2	8	3/8	3/8
2-1/2	9	1/2	1/2
3	10	1/2	1/2
4	10	1/2	5/8
5	10	1/2	5/8
6	10	5/8	3/4

END OF SECTION

SECTION 23 31 00

HVAC DUCTS AND CASINGS

PART 1 - GENERAL

1.1 SUMMARY

A. Section Includes:

1. Duct Materials.
2. Insulated flexible ducts.
3. Single wall spiral round ducts.
4. Transverse duct connection system.
5. Ductwork fabrication.
6. Duct cleaning.

B. Related Sections:

1. Division 09 - Painting and Coating: Execution requirements for Weld priming, weather resistant, paint or coating specified by this section.
2. Division 23 - Hangers and Supports for HVAC and Plumbing Piping and Equipment: Product requirements for hangers, supports and sleeves for placement by this section.
3. Division 23 - Air Duct Accessories: Product requirements for duct accessories for placement by this section.

1.2 REFERENCES

A. ASTM International:

1. ASTM A36/A36M - Standard Specification for Carbon Structural Steel.
2. ASTM A90/A90M - Standard Test Method for Weight Mass of Coating on Iron and Steel Articles with Zinc or Zinc-Alloy Coatings.
3. ASTM A167 - Standard Specification for Stainless and Heat-Resisting Chromium-Nickel Steel Plate, Sheet, and Strip.
4. ASTM A568/A568M - Standard Specification for Steel, Sheet, Carbon, and High-Strength, Low-Alloy, Hot-Rolled and Cold-Rolled, General Requirements for.
5. ASTM A653/A653M - Standard Specification for Steel Sheet, Zinc-Coated (Galvanized) or Zinc-Iron Alloy-Coated (Galvannealed) by the Hot-Dip Process.
6. ASTM A1008/A1008M - Standard Specification for Steel, Sheet, Cold-Rolled, Carbon, Structural, High-Strength Low-Alloy and High-Strength Low-Alloy with Improved Formability.
7. ASTM A1011/A1011M - Standard Specification for Steel, Sheet and Strip, Hot-Rolled, Carbon, Structural, High-Strength Low-Alloy and High-Strength Low-Alloy with Improved Formability.
8. ASTM B209 - Standard Specification for Aluminum and Aluminum-Alloy Sheet and Plate.
9. ASTM C14 - Standard Specification for Concrete Sewer, Storm Drain, and Culvert Pipe.

10. ASTM C443 - Standard Specification for Joints for Circular Concrete Sewer and Culvert Pipe, Using Rubber Gaskets.
11. ASTM E84 - Standard Test Method for Surface Burning Characteristics of Building Materials.

B. California Mechanical Code:

1. CMC – State of California Mechanical Code.

C. National Fire Protection Association:

1. NFPA 90A - Standard for the Installation of Air Conditioning and Ventilating Systems.
2. NFPA 90B - Standard for the Installation of Warm Air Heating and Air Conditioning Systems.

D. Sheet Metal and Air Conditioning Contractors:

1. SMACNA - HVAC Air Duct Leakage Test Manual.
2. SMACNA - HVAC Duct Construction Standard - Metal and Flexible.

E. Underwriters Laboratories Inc.:

1. UL 181 - Factory-Made Air Ducts and Connectors.

1.3 PERFORMANCE REQUIREMENTS

A. Variation of duct configuration or sizes other than those of equivalent or lower loss coefficient is not permitted except by written permission. Size round ducts installed in place of rectangular ducts in accordance with ASHRAE table of equivalent rectangular and round ducts, if it is not shown on the drawings.

1.4 SUBMITTALS

A. Division 01 - Submittal Procedures: Submittal procedures.

B. Shop Drawings: Submit duct fabrication drawings, drawn to scale not smaller than 1/4 inch equals 1 foot, on drawing sheets same size as Contract Documents, indicating:

1. Fabrication, assembly, and installation details, including plans, elevations, sections, details of components, and attachments to other work.
2. Duct layout, indicating pressure classifications and sizes in plan view. For exhaust duct systems, indicate classification of materials handled as defined in this section.
3. Fittings.
4. Reinforcing details and spacing.
5. Seam and joint construction details.
6. Penetrations through fire rated and other walls.
7. Terminal unit, and coil installations.
8. Hangers and supports, including methods for building attachment, vibration isolation, and duct attachment.

9. Equipment service clearance, access panels and door swings.

C. Product Data: Submit data for duct materials, duct liner and duct connectors.

D. Acceptance or no exceptions taken by the engineer on any substitution proposed by the contractor shall not be construed as relieving the contractor from compliance with the project's specifications and performance requirements nor departure there from. The contractor remains responsible for details and accuracy for confirming and correlating quantities and dimensions and for the selection of fabrication processes, techniques and assembly, coordination of his work with that of all other trades and making any needed modifications consequent to the substitution at his own cost and for performing the work in a safe manner.

1.5 CLOSEOUT SUBMITTALS

A. Division 01 - Execution and Closeout Requirements: Closeout procedures.

B. Project Record Documents: Record actual locations of ducts and duct fittings. Record changes in fitting location and type. Show additional fittings used.

1.6 QUALITY ASSURANCE

A. Perform Work in accordance with SMACNA - HVAC Duct Construction Standards - Metal and flexible.

B. Construct ductwork to NFPA 90A standards.

C. Maintain one copy of each document on site.

1.7 QUALIFICATIONS

A. Manufacturer: Company specializing in manufacturing products specified in this section with minimum three years documented experience.

B. Installer: Company specializing in performing Work of this section with minimum three years documented experience approved by manufacturer.

1.8 PRE-INSTALLATION MEETINGS

A. Division 01 - Administrative Requirements: Pre-installation meeting.

B. Convene minimum three weeks prior to commencing work of this section.

1.9 ENVIRONMENTAL REQUIREMENTS

A. Division 01 - Product Requirements.

B. Do not install duct sealant when temperatures are less than those recommended by sealant manufacturers.

C. Maintain temperatures during and after installation of duct sealant.

1.10 FIELD MEASUREMENTS

A. Verify field measurements prior to fabrication.

1.11 WARRANTY

A. Division 01 - Execution and Closeout Requirements: Product warranties and product bonds.

PART 2 - PRODUCTS

2.1 DUCT MATERIALS

A. Galvanized Steel Ducts: ASTM A653/A653M minimum 24 gauge galvanized steel sheet, lock-forming quality, having G90 zinc coating of in conformance with ASTM A90/A90M.

B. Fasteners: Rivets, bolts, or sheet metal screws.

C. Steel shapes shall be hot rolled, galvanized.

D. Screws and bolts shall be cadmium plated.

E. Materials and fabrication shall comply with 2013 California Mechanical Code.

F. For supply air and return air ductwork above roof, or exposed to weather, use double walled duct with insulation in between. Size of duct indicated on the drawings shall be internal dimension. Internal and external duct shall be of same gauge.

G. Hanger Rod: ASTM A36/A36M; steel, galvanized; threaded both ends, threaded one end, or continuously threaded.

2.2 INSULATED FLEXIBLE DUCTS

A. Manufacturers:

1. Casco
2. Thermflex
3. Glen Flex
4. Substitutions: Division 01 - Product Requirements.

B. Product Description: Flexible duct shall consist of an exterior reinforced laminated vapor barrier, 1-1/2 inch thick fiberglass insulation (K = .25 @ 75 degrees F), encapsulated spring steel wire helix and impervious, smooth, non-perforated interior vinyl liner. Individual lengths of flexible ducts shall contain factory fabricated steel connection collars. Flexible fiberglass duct shall meet the requirements of NFPA No. 90A and UL 181.

1. Pressure Rating: 10 inches wg positive and 1.0 inches wg negative.
2. Maximum Velocity: 4000 fpm.
3. Temperature Range: -10 degrees F to 160 degrees F.

4. Furnish each flexible duct section with integral clamping devices for connection to round or oval fittings.
5. Join each flexible duct section to main trunk duct through sheet metal fittings. Construct fittings of galvanized steel and equip with factory installed volume damper having positive locking regulator. Provide fittings installed in lined ductwork with insulation guard.
6. Flexible ducts shall be supported at or near mid-length with 2 inch wide, 28 gage steel hanger collar, attached to the structure with an approved duct hanger. Installation shall minimize sharp radius turns or offsets. The maximum length connecting to terminal outlets shall be 7 feet and minimum length of 5 feet.
7. Insulated flexible ducts shall be continuous, single pieces, 7' in length for low pressure, and they shall be adequately supported with a center strap support. Ducts shall be installed with a minimum radius of bend of two duct diameters. These flexible ducts are specified to tie into side inlet/outlet insulated ceiling diffusers or return air grills. The metal duct system shall be installed such that sufficient room exists to accommodate the flex duct straight runs from the metal duct to the ceiling devices. Distances too close to meet the intent of the specifications will be revised and installed according to the specifications.
8. Low pressure ductwork shall have precut lengths with continuous inner liner, factory installed female collars and fastening devices at each end, a factory installed manual balancing damper assembly complete with a level position indicator and a positive locking device.
9. Provide all round duct takeoffs from low pressure ducts with aluminum draw band, or Spin In Twist Lok fittings, approved for installation in return air plenum.

C. UL Requirements:

1. The entire flexible duct assembly shall be labeled in accordance with UL 181 Class I air duct requirements and not have a flame and smoke spread rating in excess of 25/50.
2. Installation must conform with factory supplied and UL approved print installation instruction sheets.
3. Submittals will be required to include product data sheets and installation instruction sheets in order to assure awareness of the proper installation technique.

2.3 SINGLE WALL SPIRAL ROUND DUCTS

A. Manufacturers:

1. McGill Airflow Corporation
2. Semco Incorporated
3. Tangent Air Corp
4. Spiral Mfg. Co., Inc.
5. Substitutions: Division 01 - Product Requirements.

B. Product Description: UL 181, Class 1, round spiral lock seam duct constructed of galvanized steel.

C. Construct duct with the following minimum gages:

Diameter	Gauge

3 inches to 14 inches	26
15 inches to 26 inches	24
28 inches to 36 inches	22
38 inches to 50 inches	20
52 inches to 84 inches	18

D. Construct fittings with the following minimum gages:

Diameter	Gauge
3 inches to 14 inches	24
15 inches to 26 inches	22
28 inches to 36 inches	20
38 inches to 50 inches	20
52 inches to 60 inches	18
62 inches to 84 inches	16

2.4 RECTANGULAR DUCT FABRICATION (GENERAL)

A. Fabricate ducts, elbows, transitions, offsets, branch connections, and other construction according to SMACNA's "HVAC Duct Construction Standards--Metal and Flexible" and complying with requirements for metal thickness, reinforcing types and intervals, tie-rod applications, and joint types and intervals except as modified by this specification.

1. Lengths: Fabricate rectangular ducts in lengths appropriate to reinforcement and rigidity class required for pressure class.
2. Deflection: Duct systems shall not exceed deflection limits according to SMACNA's "HVAC Duct Construction Standards--Metal and Flexible."

B. Elbows shall be radius or short radius with vanes, type RE 1 and RE 3 in the SMACNA manual. Mitered elbows with turning vanes shall be used where shown on drawings. Construct vanes per pages A.41 and A.43 of the SMACNA manual.

C. Divided flow branches shall be per SMACNA manual figure 2-5, type 1 or type 4A or 4B only.

D. Branch connections per SMACNA manual figure 2-6; 45-degree entry shall only be used where airflow in branch is less than 25% of total airflow in main duct.

E. Offsets shall be SMACNA manual figure 2-7, type 3 only.

F. Bell-mouth transitions shall be used on connections to air handling units and plenums.

G. Transverse Joints: Prefabricated slide-on joints and components constructed using manufacturer's guidelines for material thickness, reinforcement size and spacing, and joint reinforcement.

1. Manufacturers:

   a. TDC.
   b. Ductmate Industries, Inc.
   c. Nexus Inc.

H. Longitudinal Seams: Pittsburgh lock sealed with non-curing polymer sealant. Button punch snap lock seams are not acceptable to the University and shall not be used.

I. Provide drive slip or equivalent flat seams for ducts exposed in the conditioned space or where necessary due to space limitations.

J. Cross Breaking or Cross Beading: Cross break or cross bead duct sides 19 inches and larger and 0.0359 inch thick or less, with more than 10 sf of non-braced panel area unless ducts are lined.

2.5 RECTANGULAR DUCTWORK FABRICATION (INTERIOR)

A. Low Pressure Duct Construction Schedule: (2 inch" S.P. and below). Include all return, exhaust, supply branches and ductwork downstream of terminal units.

Duct Dimension (Inches)	Material Gauges	Construction of Transverse Joints, Bracing and Reinforcing
0 to 12	26	Hemmed S slip spaced not more than 10’ apart
13 to 30	24	Ductmate Jr.**, or 1” G lock spaced not more than 10’ apart
31 to 42	22	Ductmate Jr.**, spaced not more than 5’ apart
43 to 54	22	Ductmate**, spaced not more than 4’ apart
55 to 60	20	Ductmate**, spaced not more than 4’ apart
61 to 84	20	Ductmate**, spaced not more than 4’ apart
85 and up	18	Ductmate**, spaced not more than 4’ apart. Provide intermediate bracing for low pressure ductwork 85” and larger

Note: * Based on maximum of 2.0" WG.

** The Lockformer Company TDC or approved equal

1. Provide intermediate bracing for low pressure ductwork 85 inches and larger.
2. All ducts over 18 inches in either dimension shall be stiffened with beads on 24 through 20 gage. Cross break on 18 and 16 gauge. Longitudinal seams shall be Pittsburgh locks Snap-Lock shall be limited to 12 inch maximum width of ducts.

B. Strap hanger shall be a minimum of 1 inch, #18 gauge galvanized steel attached to the bottom of ducts at 8'- 0" OC and as required by CMC and SMACNA guidelines.

C. Elbows shall be radius or short radius with vanes, type RE 1 and RE 3 in the SMACNA manual. Mitered elbows with turning vanes shall be used where shown on drawings. Construct vanes per pages A.41 and A.43 of the SMACNA manual.

D. Divided flow branches shall be per SMACNA manual figure 2-5, type 1 or type 4A or 4B only.

E. Branch connections per SMACNA manual figure 2-6; 45-degree entry shall only be used where airflow in branch is less than 25% of total airflow in main duct.

F. Offsets shall be SMACNA manual figure 2-7, type 3 only.

G. Bellmouth transitions shall be used on connections to air handling units and plenums.

H. Provide Ductmate and Ductmate, Jr. with all required material including metal cleats, corner bolts and nuts, angles, clips and gaskets, all installed in accordance with manufacturer's recommendations and supervision.

I. Quadrant volume damper blades in fittings shall be two gauges heavier than the fittings.

J. Longitudinal Seams: Pittsburgh lock sealed with non-curing polymer sealant. Button punch snap lock seams are not acceptable and shall not be used.

K. Provide drive slip or equivalent flat seams for ducts exposed in the conditioned space or where necessary due to space limitations.

L. Cross Breaking or Cross Beading: Cross break or cross bead duct sides 19 inches and larger and 0.0359 inch thick or less, with more than 10 sq. ft. of non-braced panel area unless ducts are lined.

M. Increase duct sizes gradually, not exceeding 15 degrees divergence wherever possible; maximum 30 degrees divergence upstream of equipment and 45 degrees convergence downstream.

N. Provide standard 45-degree lateral wye takeoffs. When space does not allow 45-degree lateral wye takeoff, use 90-degree conical tee connections.

2.6 RECTANGULAR DUCTWORK FABRICATION (EXTERIOR)

A. Provide duct and fittings with exceptional noise and thermal control in air handling systems. This double-wall, insulated ductwork shall be constructed of a solid steel outer pressure shell and a steel inner liner with a layer of insulation sandwiched between. Other insulation materials and rectangular duct and fittings shall be shipped fully assembled with transverse duct connector flanged ends. Both outer pressure shell and metal inner liner shall incorporate Pittsburgh lockseam construction and TDC end connectors. Ductwork is fully assembled with a finished length of 56-1/4 inches or 68-1/4 inches. Refer to 2.06 for duct gauge requirements.

2.7 ROUND DUCT AND FITTING FABRICATION (INTERIOR)

A. Circular (across section) ducts shall be galvanized steel of spiral seam construction, fittings shall have continuous, welded, stamped construction both manufactured by United Sheet Metal, Omniduct, Spiromatic, Spiro Duct, Casco or approved equal.

B. Make joints between two ducts with beaded sleeve joint, with duct sealer applied to both the male and female duct ends, then mechanically fastened with sheet metal screws.

C. Install all duct work according to the following: the radius of elbows shall be minimum of 1 1/2 times diameter or maximum width of duct. Gored ells are not acceptable. Violations of this requirement shall be removed from the system and replaced per the design documents and the drawings at no cost to the Owner. Failure to do so will result in the Project Manager replacing the defective installation and back charging the cost to the offending contractor.

D. Tee fittings shall be of conical type changing in shape from round to rectangular with transformation joint with minimum of 1 to 7 taper.

E. Corrugated or flexible metal duct, or shop fabricated circular ducts will not be acceptable.

2.8 ROUND DUCT AND FITTING FABRICATION (EXTERIOR)

A. Provide double-wall, insulated duct and fittings with exceptional noise and thermal control in air handling systems. They shall be constructed of a solid galvanized sheet metal outer pressure shell and a solid galvanized sheet metal inner liner with a layer of 2” insulation sandwiched. The shell constructions shall have longitudinal seam. Refer to 2.03 for duct gauge requirements.

2.9 DUCT SEALANT MATERIALS

A. Joint and Seam Sealants, General: The term "sealant" is not limited to materials of adhesive or mastic nature but includes tapes and combinations of open-weave fabric strips and mastics.

B. Tape Sealing System: Woven-fiber tape impregnated with gypsum mineral compound and modified acrylic/silicone activator to react exothermically with tape to form hard, durable, airtight seal.

C. Water-Based Joint and Seam Sealant: Flexible, adhesive sealant, resistant to UV light when cured, UL 181 listed; passes UL 723 for flame spread and smoke development; and complying with NFPA requirements for Class 1 ducts.

D. Flanged Joint Mastic: One-part, acid-curing, silicone, elastomeric joint sealant complying with ASTM C 920, Type S, Grade NS, Class 25, Use O.

E. Flange Gaskets: Butyl rubber or EPDM polymer with polyisobutylene plasticizer.

F. Provide sealant or tape for metal ducts at duct joints which are defined as transverse joints between duct sections including girth joints, branch and sub-branch intersections, duct collar tap-ins, fitting subsections, louver and air terminal connections, access doors and frames, and abutments to building structure. Also provide the same at duct seams which are defined as longitudinal joint between duct sections. Spiral lock seams in factory fabricated round or oval ducts are excluded.

G. Sealant for low-pressure ducts shall be: Design Polymerics- DP1010 or 1020, Childers Chil-Flex CP145A/146, Foster's Duct-Fas 32-19, Kingco-Glenkote11-500, Ductmate ProSeal or FiberSeal, or equal. Provide tape joints with canvas fastened with Borden Chemical Division Arabol adhesive, or equal.

PART 3 - EXECUTION

3.1 EXAMINATION

A. Division 01 - Administrative Requirements: Coordination and project conditions.

B. Verify sizes of equipment connections before fabricating transitions.

3.2 INSTALLATION

A. Install ducts in accordance with SMACNA HVAC Duct Construction Standards - Metal and Flexible, as required in this section and in the Contract Drawings.

B. During construction, install temporary closures of metal or taped polyethylene on open ductwork to prevent construction dust from entering ductwork system.

C. Use beaded sleeve couplings for joining round duct and flexible ducts.

D. Install duct hangers and supports in accordance with Section 23 05 29.

E. Use double nuts and lock washers on threaded rod supports.

F. Seal all ductwork.

3.3 INSTALLATION OF METAL DUCTWORK

A. General: Assemble and install ductwork in accordance with recognized industry practices which will achieve air-tight (5% leakage for systems rated 3 inch and under; 1% for systems rated over 3 inch) and noiseless (no objectionable noise) systems capable of performing each indicated service. Install each run with a minimum number of joints. Align ductwork accurately at connections, within 1/8 inch misalignment tolerance and with internal surfaces smooth. Support ducts rigidly with suitable ties, braces, hangers and anchors of type which will hold ducts true-to-shape and to prevent buckling. Support vertical ducts at every floor.

B. Field Fabrication: Complete fabrication of work at project as necessary to match shop fabricated work and accommodate installation requirements.

C. Routing: Locate ductwork runs, except as otherwise indicated, vertically and horizontally and avoid diagonal runs wherever possible. Locate runs as indicated by diagrams, details and notations or, if not otherwise indicated, run ductwork in shortest route which does not obstruct useable space or block access for servicing building and its equipment. Hold ducts close to walls, overhead construction, column, and other structural and permanent enclosure elements of building. Limit clearance to 1/2 inch where furring is shown for enclosure or concealment of ducts, but allow for insulation thickness, if any. Where possible, locate insulated ductwork for 1 inch clearance outside of insulation. Wherever possible in finished and occupied spaces, conceal ductwork from view, by locating in mechanical shafts, hollow wall construction or above suspended ceilings. Do not encase horizontal runs in solid partitions, except as specifically shown. Coordinate layout with suspended ceiling and lighting layouts and similar finished work.

D. Coordination: Coordinate duct installations with installation of accessories, dampers, coil frames, equipment, controls and other associated work of ductwork system.

E. Tape the clips, Snaplock seams and joints or connections of the metal supply, return and exhaust ducts and the grilled and diffuser connections with 4 inch strips of 6 oz. canvas attached with Arabol or Hardcast adhesive. Tape the filter frames the same as ducts. Coat all canvas exposed to the weather with Tuff Bond #12. Taping of Pittsburgh seams is required. Exposed interior ductwork intended for open ceilings shall not be taped or covered with canvas.

F. Install access doors to open against system air pressure, with latches operable from either side, except outside only where duct is too small for person to enter.

G. Coordinate with other work, including ductwork, as necessary to interface installation of ductwork accessories properly with other work.

H. Round ducts shall be used to the maximum extent possible. As duct size increases, flat oval shall be considered. Rectangular ducts shall be limited to areas of space restriction with a maximum aspect ratio of 2:1. If due to a structural clearance constraint, duct aspect ratio can be increased and/or duct cross section reduced if upstream transition has included angles of 60 degrees or less and downstream transition has included angles of 30 degrees or less.

I. Ducts exposed outside to elements shall only be of round construction to shed rainwater. If conditions do not allow round ducts, provisions shall be provided to slope the flat top of rectangular ductwork so rainwater will not stand on top of duct.

J. Except for connection of terminal discharge duct to air outlets, 90 degree taps shall not be used unless space prohibits the use of low loss fittings. Takeoff feeding terminals shall be conical branch; 45 wye, conical branch; low loss tee; bell mouth, or branch with a loss coefficient equivalent to that for the conical branch. The slopes of transitions shall be approximately one to five, and no abrupt changes or offsets of any kind in the duct system shall be permitted.

K. Install round ducts in lengths not less than 12 feet unless interrupted by fittings.

L. Install ducts with fewest possible joints.

M. Install fabricated fittings for changes in directions, size, and shape and for connections.

N. Install couplings tight to duct wall surface with a minimum of projections into duct. Secure couplings with sheet metal screws. Install screws at intervals of 12 inches, with a minimum of 3 screws in each coupling.

O. Install ducts vertically and horizontally and parallel and perpendicular to building lines; avoid diagonal runs in ducts that would be over 12 feet in length.

P. Install ducts close to walls, overhead construction, columns, and other structural and permanent enclosure elements of building.

Q. Install ducts with a clearance of 2 inch on each side, plus allowance for insulation thickness.

R. Conceal ducts from view in finished spaces. Do not encase horizontal runs in solid partitions unless specifically indicated.

S. Coordinate layout with suspended ceiling, fire- and smoke-control dampers, lighting layouts, and similar finished work.

T. Seal all joints and seams. If specification requires duct pressure test then duct sealant can be used instead of canvas and Arabol. Apply sealant to male end connectors before insertion, and afterward to cover entire joint and sheet metal screws.

U. Duct hangers shall be attached to horizontal slabs with steel angle clips secured with inserts, strapped to vertical walls, bolted to beams and joists, as per SMACNA guidelines, or as approved by the Architect.

V. All ducts and equipment shall be blown out prior to operating.

W. Electrical Equipment Spaces: Route ducts to avoid passing through transformer vaults and electrical equipment spaces and enclosures and telephone equipment rooms.

X. Non-Fire-Rated Partition Penetrations: Where ducts pass through interior partitions and exterior walls and are exposed to view, conceal spaces between construction openings and ducts or duct insulation with sheet metal flanges of same metal thickness as ducts. Overlap openings on 4 sides by at least 1-1/2 inches.

Y. Fire-Rated Partition Penetrations: Where ducts pass through interior partitions and exterior walls, install appropriately rated fire dampers or combination fire/smoke dampers, sleeves.

Z. Install ducts with hangers and braces designed to withstand, without damage to equipment, seismic force required by California building codes.

AA. Protect duct interiors from the elements and foreign materials until building is enclosed. Follow SMACNA's "Duct Cleanliness for New Construction."

BB. Do not paint interiors of metal ducts.

CC. Protect duct openings from damage and prevent entrance of foreign materials.

3.4 INSTALLATION OF FLEXIBLE DUCTS

A. Maximum length: For any duct run using flexible ductwork, do not exceed 7'- 0" extended length.

B. Installation: Install in accordance with Section III of SMACNA's "HVAC Duct Construction Standards, Metal and Flexible", latest edition.

C. Bends in flexible ducts shall have a radius of not less than 1.5 times the internal diameters.

3.5 EQUIPMENT CONNECTIONS

A. General: Connect metal ductwork to equipment as indicated. Provide flexible connection for each ductwork connection to equipment mounted on vibration isolators, and/or equipment containing rotary machinery. Provide access doors as indicated.

3.6 HANGING AND SUPPORTING

A. Support horizontal ducts within 24 inches of each elbow and within 48 inches of each branch intersection.

B. Support vertical ducts at maximum intervals of 16 feet and at each floor.

C. Install upper attachments to structures with an allowable load not exceeding one-fourth of failure (proof-test) load. Wire and friction clamps shall not be used.

D. Install concrete inserts before placing concrete.

E. Install drilled in concrete anchors after concrete is placed and completely cured.

F. Do not use powder-actuated concrete fasteners.

3.7 INTERFACE WITH OTHER PRODUCTS

A. Install openings in ductwork where required to accommodate thermometers and controllers. Install Pitot tube openings for testing of systems. Install Pitot tube complete with metal can with spring device or screw to prevent air leakage. Where openings are provided in insulated ductwork, install insulation material inside metal ring.

B. Connect diffusers or light troffer boots to low pressure ducts directly or with 5 to 7 feet maximum length of flexible duct held in place with strap or clamp except as otherwise shown on the drawings. Do not use flexible duct on moisture laden air systems.

C. Connect air terminal units to supply ducts directly with at least one duct size larger than air terminal connection, except as shown otherwise on the drawings.

3.8 CLEANING NEW SYSTEM

A. Division 01 - Execution and Closeout Requirements: Final cleaning.

B. If the ductwork system is maintained in a clean state during the installation the following is not required. If in the opinion of the Architect/Engineer or Owner’s Representative the ductwork system is dirty the following shall be complied with.

C. Mark position of dampers and air-directional mechanical devices before cleaning, and perform cleaning before air balancing.

D. Use service openings, as required, for physical and mechanical entry and for inspection.

E. Create other openings to comply with duct standards.

F. Disconnect flexible ducts as needed for cleaning and inspection.

G. Remove and reinstall ceiling sections to gain access during the cleaning process.

H. Vent vacuuming system to the outside. Include filtration to contain debris removed from HVAC systems, and locate exhaust down wind and away from air intakes and other points of entry into building.

I. Clean the following metal duct systems by removing surface contaminants and deposits:

1. Air outlets and inlets (registers, grilles, and diffusers).
2. Supply, return, and exhaust fans including fan housings, plenums (except ceiling supply and return plenums), scrolls, blades or vanes, shafts, baffles, dampers, and drive assemblies.
3. Air-handling unit internal surfaces and components including mixing box, coil section, air wash systems, spray eliminators, condensate drain pans, humidifiers and dehumidifiers, filters and filter sections, and condensate collectors and drains.
4. Coils and related components.
5. Return-air ducts, dampers, and actuators except in ceiling plenums and mechanical equipment rooms.
6. Supply-air ducts, dampers, actuators, and turning vanes.

J. Cleaning Requirements:

1. Interior surfaces of all supply ductwork shall be cleaned of dust and dirt at the fabrication shop during fabrication.
2. Supply Ductwork shall be sealed to protect interior surfaces prior to being shipped and handled.
3. Seals and wrapping shall be removed on job site at time of installation.
4. Seal open duct ends during at the end of each day.

K. Mechanical Cleaning Methodology:

1. Clean metal duct systems using mechanical cleaning methods that extract contaminants from within duct systems and remove contaminants from building.
2. Use vacuum-collection devices that are operated continuously during cleaning. Connect vacuum device to downstream end of duct sections so areas being cleaned are under negative pressure.
3. Use mechanical agitation to dislodge debris adhered to interior duct surfaces without damaging integrity of metal ducts, duct liner, or duct accessories.
4. Clean fibrous-glass duct liner with HEPA vacuuming equipment; do not permit duct liner to get wet.

5. Clean coils and coil drain pans according to NADCA 1992. Keep drain pan operational. Rinse coils with clean water to remove latent residues and cleaning materials; comb and straighten fins.

L. Cleanliness Verification:

1. Visually inspect metal ducts for contaminants.
2. Where contaminants are discovered, re-clean and re-inspect ducts.

3.9 SCHEDULES

A. Static-Pressure Classes: Construct ducts according to the following:

1. Supply Ducts (Exterior Installation): 4-inch wg.
2. Supply Ducts before Air Terminal Units (VAV Boxes or Air Valves): 4-inch wg.
3. Supply Ducts after Air Terminal Units (VAV Boxes or Air Valves): 2-inch wg.
4. Supply Ducts (In Mechanical Equipment Rooms): 4-inch wg.
5. Return Ducts (Negative Pressure) Before Air Terminal Units: 4-inch wg.
6. Return Ducts (Negative Pressure): 2-inch wg.
7. General Exhaust (Negative Pressure) Before Air Terminal Units: 4-inch wg.
8. General Exhaust Ducts (Negative Pressure): 2-inch wg.
9. Vertical risers shall be constructed to a minimum of 4-inch wg, regardless of type.

END OF SECTION

SECTION 23 33 00

AIR DUCT ACCESSORIES

PART 1 - GENERAL

1.1 SUMMARY

A. Section Includes:

1. Back-draft dampers.
2. Combination fire-and-smoke dampers.
3. Duct access doors.
4. Volume control dampers.
5. Flexible duct connections.
6. Duct test holes.

B. Related Sections:

1. Division 23 - HVAC Ducts and Casings: Requirements for duct construction and pressure classifications.
2. Division 26 - Equipment Wiring Connections: Execution requirements for connection of electrical Combination Smoke and Fire Dampers specified by this section.

1.2 REFERENCES

A. Air Movement and Control Association International, Inc.:

1. AMCA 500 - Test Methods for Louvers, Dampers, and Shutters.

B. ASTM International:

1. ASTM E1 - Standard Specification for ASTM Thermometers.

C. National Fire Protection Association:

1. NFPA 90A - Standard for the Installation of Air Conditioning and Ventilating Systems.
2. NFPA 92A - Recommended Practice for Smoke-Control Systems.

D. Sheet Metal and Air Conditioning Contractors:

1. SMACNA - HVAC Duct Construction Standard - Metal and Flexible.

E. Underwriters Laboratories Inc.:

1. UL 555 - Standard for Safety for Fire Dampers.
2. UL 555C - Standard for Safety for Ceiling Dampers.
3. UL 555S - Standard for Safety for Smoke Dampers.

1.3 SUBMITTALS

A. Division 01 - Submittal Procedures: Submittal procedures.

B. Shop Drawings: Indicate for shop fabricated assemblies including volume control dampers, duct access doors and duct test holes.

C. Product Data: Submit data for shop fabricated assemblies and hardware used.

D. Product Data: Submit for the following. Include where applicable electrical characteristics and connection requirements.

1. Fire dampers including locations and ratings.
2. Smoke dampers including locations and ratings.
3. Backdraft dampers.
4. Flexible duct connections.
5. Volume control dampers.
6. Duct access doors.
7. Duct test holes.

E. Product Data: For fire dampers, smoke dampers, combination fire and smoke dampers submit the following:

1. Include UL ratings, California Sate Fire Marshal approval and NFPA 90A, dynamic ratings, leakage, pressure drop and maximum pressure data.
2. Indicate materials, construction, dimensions, and installation details.
3. Damper pressure drop ratings based on tests and procedures performed in accordance with AMCA 500.

F. Manufacturer's Installation Instructions: Submit for Fire and Combination Smoke and Fire Dampers.

G. Manufacturer's Certificate: Certify products meet or exceed specified requirements.

H. Acceptance or no exceptions taken by the engineer on any substitution proposed by the contractor shall not be construed as relieving the contractor from compliance with the project's specifications and performance requirements nor departure there from. The contractor remains responsible for details and accuracy for confirming and correlating quantities and dimensions and for the selection of fabrication processes, techniques and assembly, coordination of his work with that of all other trades and making any needed modifications consequent to the substitution at his own cost and for performing the work in a safe manner.

1.4 CLOSEOUT SUBMITTALS

A. Division 01 - Execution and Closeout Requirements: Closeout procedures.

B. Project Record Documents: Record actual locations of access doors, test holes and combination smoke/fire dampers.

C. Operation and Maintenance Data: Submit for Combination Smoke and Fire Dampers.

1.5 QUALITY ASSURANCE

A. Dampers tested, rated and labeled in accordance with the latest UL requirements.

B. Damper pressure drop ratings based on tests and procedures performed in accordance with AMCA 500.

C. Maintain one copy of each document on site.

1.6 QUALIFICATIONS

A. Manufacturer: Company specializing in manufacturing products specified in this section with minimum three years documented experience.

1.7 PRE-INSTALLATION MEETINGS

A. Division 01 - Administrative Requirements: Pre-installation meeting.

B. Convene minimum three weeks prior to commencing work of this section.

1.8 DELIVERY, STORAGE, AND HANDLING

A. Division 01 - Product Requirements: Product storage and handling requirements.

B. Protect dampers from damage to operating linkages and blades.

C. Delivery: Deliver materials to site in manufacturer's original, unopened containers and packaging, with labels clearly indicating manufacturer and material.

D. Storage: Store materials in a dry area indoor, protected from damage.

E. Handling: Handle and lift dampers in accordance with manufacturer's instructions. Protect materials and finishes during handling and installation to prevent damage.

1.9 FIELD MEASUREMENTS

A. Verify field measurements prior to fabrication.

1.10 COORDINATION

A. Division 01 - Administrative Requirements: Coordination and project conditions.

B. Coordinate Work where appropriate with building control Work.

1.11 WARRANTY

A. Division 01 - Execution and Closeout Requirements: Product warranties and product bonds.

1.12 EXTRA MATERIALS

A. Division 01 - Execution and Closeout Requirements: Spare parts and maintenance products.

PART 2 - PRODUCTS

2.1 BACK-DRAFT DAMPERS

A. Manufacturers:

1. Pottorff
2. Ruskin
3. Greenheck

B. Product Description: Multi-Blade, back-draft dampers: Parallel-action, gravity-balanced, extruded aluminum. Blades, maximum 6 inch width, with felt or flexible vinyl sealed edges. Blades linked together in rattle-free manner with 90-degree stop, steel ball bearings, and plated steel pivot pin. Furnish dampers with adjustment counter balance weight to permit setting for varying differential static pressure. Back draft damper shall be capable of adjusting to 0.025 inches of water pressure.

2.2 COMBINATION FIRE AND SMOKE DAMPERS / FIRE DAMPERS

A. Manufacturers:

1. Pottorff
2. Ruskin
3. Air Balance, Inc.

B. Furnish and install California State Fire Marshal approved combination smoke/fire dampers where shown on plans. The dampers shall meet all the requirements for smoke dampers per the latest edition of NFPA 90A and UL standards. Units shall be tested and listed under UL 555 and UL 555S. Rating 1-1/2 hours for installation in one or 2-hour partitions. The seals shall be non-degradable steel to steel. Leakage shall not exceed 15 cfm/sq. ft. at one inch w.g. and shall be tested at 850 degrees F. Fire releasing device shall be UL 33 listed melting fusible links. Dampers shall be provided in sleeves with pre-mounted non-stall motor actuators and dual-position indicators for remote annunciation, if required. The complete assembly shall be factory cycled and tested prior to shipment. Provide suitable access for inspection and servicing of each damper.

2.3 DUCT ACCESS DOORS

A. Manufacturers:

1. Air Balance, Inc.
2. Duro Dyne Corp.
3. Register & Grille Mfg. Co., Inc.
4. Ruskin Mfg. Co.
5. Ventfabrics, Inc.

6. Zurn Industries, Inc.; Air Systems Div.

B. General:

1. Access doors shall be of size to permit duct cleaning, inspection and adjustment and replacement of fire damper links, fan bearings, etc. through access opening. The minimum size shall be 12" x 12" or equivalent size as approved by the engineer. Access door gauges shall match duct.
2. Fore square or rectangular ducts:

a. Door shall be double wall type with felt or foam rubber gasket seal and shall have butt hinges and sash locks on 2-opposite sides, at a maximum spacing of 9". Use sash locks on both sides where hinged door swings may be obstructed.
b. Door in insulated ducts shall be double walled and shall contain a full thickness of insulation between the door panels.

3. Access doors for circular ducts shall be United Sheet Metal Type AR-W, Omniduct, Spiromatic, Spiro-Duct, or approved equal. Door shall have same requirements as for rectangular duct.

C. Fabricate in accordance with SMACNA HVAC Duct Construction Standards - Metal and Flexible, and as indicated on Drawings.

2.4 VOLUME CONTROL DAMPERS

A. Manufacturers:

1. Ventfabrics, Inc.
2. Young Regulator Co.
3. Duro Dyne Corp.

B. General Description: Factory fabricated, with required hardware and accessories. Stiffen damper blades for stability. Include locking device to hold single-blade dampers in a fixed position without vibration. Close duct penetrations for damper components to seal duct consistent with pressure class.

1. Pressure Classes of 3-Inch wg or Higher: End bearings or other seals for ducts with axle’s full length of damper blades and bearings at both ends of operating shaft.

C. Dampers installed in ductwork, in furred ceiling spaces or in roof spaces with less than 30" of clearance below beams, joints or other construction, and where access panels are not provided shall have damper rods extended below ceiling and terminated with a concealed damper regulator, Ventlok, Young, or approved equal. The location of each damper shall be identified by a Green dot for supply air registers and a red dot for return air grills. The one inch diameter dots shall be placed by the HVAC contractor on tee tee bar ceiling gird nearest the damper and stuck on the damper side of the tee with one half of the dot showing and the other half of the dot folded up around the top part of the tee bar.

D. Damper blades shall not exceed 10" in width and shall be a minimum of 16-gauge galvanized steel, or Re-gauge aluminum. All dampers shall be frame mounted. The damper frame shall be of minimum 12-gauge steel channel. Except that dampers less than 18" maximum size may have 16-gauge by 1-1/4" minimum flat bar stock frames. Multi blade dampers shall be arranged for opposed blade operation.

E. Steel parts shall be galvanized or factory-finished with a metal primer and enameled finish and all cut edges shall be coated as described above. All parts of dampers in outside air intakes shall be galvanized. Bearings shall be precision sleeve type of oil-impregnated bronze, Teflon or Nylon.

F. Provide locking and indicating quadrants installed in accessible locations. For wrapped ducts, quadrants shall be bracket mounted with a recessed flange.

G. Where dampers are inaccessible for adjustments, provide Ventfabrics No. 666,or equal by Young Regulator Co.; with remote operator.

H. All dampers shall be shipped with factory attached 18” long orange ribbon attached to operator shaft.

2.5 FLEXIBLE DUCT CONNECTIONS

A. Manufacturers:

1. Duro Dyne Corp.
2. Ventfabrics, Inc.

B. General Description: Flame-retardant or noncombustible fabrics, coatings, and adhesives complying with UL 181, Class 1.

C. Metal-Edged Connectors: Factory fabricated with a fabric strip 5-3/4 inches wide attached to two strips of 2-3/4-inch- wide, 0.028-inch- thick (24 ga), galvanized sheet steel or 0.032-inch- thick aluminum sheets. Select metal compatible with ducts.

D. Indoor System, Flexible Connector Fabric: Glass fabric double coated with neoprene.

1. Minimum Weight: 26 oz. /sq. yd.
2. Tensile Strength: 480 lbf/inch in the warp and 360 lb/inch in the filling.
3. Service Temperature: Minus 40 to plus 200 deg F.

2.6 SCREENS

A. Screens shall be 1 inch mesh, 12 gauge stainless steel wire set in 1 inch galvanized channel frames for all openings.

2.7 DUCT HARDWARE

A. General: Provide duct hardware, manufactured by one manufacturer for all items on project, for the following:

1. Test holes: Provide in ductwork at fan inlet and outlet, and elsewhere as indicated, duct test holes, consisting of slot and cover, for instrument tests.

2. Quadrant locks: Provide for each damper, quadrant lock device on one end of shaft; and end bearing plate on other end for damper lengths over 12 inch. Provide extended quadrant locks and end extended bearing plates for externally insulated ductwork.

B. Manufacturer: Subject to compliance with requirements, provided duct hardware of one of the following:

1. Ventfabrics, Inc.
2. Young Regulator Co.
3. Duro Dyne

2.8 TURNING VANES

A. Square throat elbow with vanes not allowed. Provide short radius elbows with vanes per SMACNA details as indicated on the drawings.

2.9 DUCT SILENCERS

A. Basis-of-Design Product: Silencers shall be Vibro-Acoustics.

1. Alternate manufacturers must request and obtain written approval by the Engineer to bid the project at least 10 days prior to the bid due-date. As a condition of pre-approval, alternate manufacturers must submit to the Engineer a minimum of twenty (20) different HVAC silencer test reports. Each report shall be for a silencer tested in full accordance with the ASTM E-477-06a silencer test standard in an aero-acoustic test facility which is NVLAP accredited for the ASTM E-477-06a standard. Each test shall have been conducted within the last 12 month period. A copy of the laboratory's NVLAP accreditation certificate must be included with the submitted reports. Any changes to the specifications must be submitted and approved in writing by the Engineer at least 10 days prior to the bid due-date.

B. General Requirements:

1. Silencers shall be of the size, configuration, capacity and acoustic performance as scheduled on the drawings. All silencers shall be factory fabricated and supplied by the same manufacturer.
2. Silencer inlet and outlet connection dimensions must be equal to the duct sizes shown on the drawings. Duct transitions at silencers are not permitted unless shown on the contract drawings.
3. Silencers shall be constructed in accordance with ASHRAE and SMACNA standards for the pressure and velocity classification specified for the air distribution system in which it is installed. Material gauges noted in other sections are minimums. Material gauges shall be increased as required for the system pressure and velocity classification. The silencers shall not fail structurally when subjected to a differential air pressure of 8 inches water gauge.
4. All casing seams and joints shall be lock-formed and sealed or stitch welded and sealed except as noted in Section G below, to provide leakage-resistant construction. Airtight construction shall be achieved by use of a duct-sealing compound supplied and installed by the contractor at the jobsite.

5. All perforated steel shall be adequately stiffened to insure flatness and form. All spot welds shall be painted.
6. Fire-Performance Characteristics: Silencer assemblies, including acoustic media fill, Vibar™ film liner, sealants, and acoustical spacer, shall have flame-spread index not exceeding 25 and smoke-developed index not exceeding 50 when tested according to ASTM E 84, NFPA 255 or UL 723.
7. Airstream Surfaces: Surfaces in contact with the airstream shall comply with requirements in ASHRAE 62.1-2007.

C. Rectangular Silencers. Outer casing shall be ASTM A 653/A 653M, G90 galvanized sheet steel, 22 gauge.

D. Rectangular Elbow Silencers. Outer casing shall be ASTM A 653/A 653M, G90 galvanized sheet steel, 18 gauge. All acoustical splitters shall be internally radiused and aerodynamically designed for efficient turning of the air. Half and full splitters are required as necessary to achieve the scheduled insertion loss. All elbow silencers with a turning cross-section dimension greater than 48” shall have at least two half splitters and one full splitter.

E. Circular Silencers. Outer casing shall be ASTM A 653/A 653M, G90 galvanized sheet steel, gauge as listed below.

1. Sheet metal thickness for units up to 18 Inches in Diameter: 22 gauge.
2. Sheet metal thickness for units 18 through 30 Inches in Diameter: 20 gauge.
3. Sheet metal thickness for units 30 through 54 Inches in Diameter: 18 gauge.
4. Sheet metal thickness for units over 54 Inches in Diameter: 16 gauge.

F. Inner perforated metal liner: ASTM A 653/A 653M, G90 galvanized sheet steel.

1. Rectangular Silencers: 26 gauge.
2. Rectangular Elbow Silencers: 22 gauge.
3. Circular Silencers:

    a. Connection diameter up to 18 inches: 26 gauge.
    b. Connection diameter greater than 18 inches: 22 gauge.

4. Transitional Silencers: 22 gauge.

G. Principal Sound-Absorbing Mechanism:

1. No-Media (Packless) silencers:

    a. Models shall not contain absorptive media of any kind. Attenuation shall be achieved with controlled impedance membranes and broadly tuned resonators.

2. Dissipative and Film Lined silencers:

    a. Models type with acoustic media. Media shall be of acoustic quality, shot-free glass fiber insulation with long, resilient fibers bonded with a thermosetting resin. Glass fiber density and compression shall be as

required to insure conformance with laboratory test data. Glass fiber shall be packed with a minimum of 15% compression during silencer assembly. Media shall be resilient such that it will not crumble or break, and conform to irregular surfaces. Media shall not cause or accelerate corrosion of aluminum or steel. Mineral wool will not be permitted as a substitute for glass fiber.

H. Media Protection:

1. Dissipative silencers where indicated on the silencer schedule, media shall be encapsulated in glass fiber cloth to help prevent shedding, erosion and impregnation of the glass fiber.
2. Film Lined silencers: acoustic media shall be completely wrapped with Vibar™ film to help prevent shedding, erosion and impregnation. The wrapped acoustic media shall be separated from the perforated metal by a factory installed ½" thick acoustically transparent spacer. The spacer shall be flame retardant and erosion resistant. A mesh, screen or corrugated perforated liner will not be acceptable as a substitute for the specified spacer. Silencer manufacturer shall provide a written test report by a third party organization showing silencer assemblies have flame-spread index not exceeding 25 and smoke-developed index not exceeding 50 when tested according to ASTM E 84, NFPA 255 or UL 723.

I. Special Construction:

1. Where noted on the silencer schedule, silencers shall have 16 gauge casing, continuously welded.
2. Where indicated on the silencer schedule, silencers shall have RF filters integral to the silencer. Performance shall be 100 dB at 1 MHz. Pressure drop shall be included in overall silencer pressure drop. RF filter shall be located such that it cannot be bypassed.
3. Where indicated on the silencer schedule, provide a non-conductive section in the silencer casing at the end of the silencer next to the room wall, and provide a minimum of 10" (254mm) x 10" (254mm) inspection port in the silencer casing next to the wall. These features shall not compromise the composite HTL casing of the silencer.
4. Where indicated on the silencer schedule, provide security bars running at 6" (150mm) centers both ways inside the silencer casing to prevent ingress through the silencer.

J. Accessories:

1. Access Doors: Where indicated on the silencer schedule, silencers shall be supplied with an access door(s) to permit fire damper service. Access doors shall be supplied as an integral part of the silencer by the silencer manufacturer. Where HTL walls are also supplied, the access doors shall not reduce the effectiveness of the HTL walls.
2. Shipping Protection: Silencers shall be shipped with factory-installed end caps to prevent contamination during shipping.
3. Airflow Measuring Devices: Where indicated on the silencer schedule, silencers shall have airflow measuring devices factory installed as part of the silencer assembly.

K. Source Quality Control: Test according to ASTM E 477-06a.

1. The manufacturer shall test the silencer(s) as indicated in the silencer schedule. The engineer shall be notified of the test date at least two weeks in advance and the test may be witnessed by the engineer. Test shall show compliance with the project criteria and is subject to engineer approval.
2. Test facilities and test reports shall be open to inspection upon request from the Engineer. Silencer performance must have been substantiated by laboratory testing according to ASTM E-477-06a and so certified when submitted for approval. The aero-acoustic laboratory must be NVLAP accredited for the ASTM E-477-06a test standard. A copy of the accreditation certificate must be included with the submittals. Data from non-NVLAP accredited test facilities will not be accepted.

L. Capacities and Characteristics:

1. See duct silencer performance schedule on mechanical drawings.

PART 3 - EXECUTION

3.1 EXAMINATION

A. Division 01 - Administrative Requirements: Coordination and project conditions.

B. Verify rated walls are ready for fire damper installation.

C. Verify ducts and equipment installation is ready for accessories.

D. Check location of air outlets and inlets and make necessary adjustments in position to conform to architectural features, symmetry, and lighting arrangement.

3.2 INSTALLATION.

A. Install in accordance with NFPA 90A, and follow SMACNA HVAC Duct Construction Standards - Metal and Flexible. Refer to Section 23 31 00 for duct construction and pressure class.

B. Provide a volume control for each grille and diffuser and in all other locations necessary to properly balance the system.

C. Quadrants on insulated ducts shall be mounted on sheet metal brackets, set flush with the insulation.

D. Install back-draft dampers on exhaust fans or exhaust ducts nearest to outside and where indicated on Drawings. Back draft dampers are not required for the fans with continuous operation and kitchen exhaust fans.

E. Provide and install access doors at convenient and individual locations in ducts where fire, smoke or automatic dampers, fan bearings, filters, humidifiers or other equipment is installed in ducts.

F. Provide and deliver to the appropriate trade for installation where you direct, access doors or panels in building construction for access to duct doors or panels, damper quadrants, control devices, or other devices requiring access.

G. Access Door Sizes: Install minimum 8 x 8 inch size for hand access, 18 x 18 inch size for shoulder access. Review locations prior to fabrication.

H. Install the following sizes for duct-mounting, round access doors:

1. 8 inches in diameter for up to 12-inch diameter duct size.
2. 12 inches in diameter for 13-inch to 19 inch duct sizes.
3. 18 inches in diameter for 20-inch to 25 inch duct sizes.
4. 24 inches in diameter for larger duct sizes than listed above.

I. Label access doors according to Division 23.

J. Install temporary duct test holes required for testing and balancing purposes. Cut or drill in ducts. Cap with neat patches, neoprene plugs, threaded plugs, or threaded or twist-on metal caps.

K. Install fire dampers, combination fire and smoke dampers and smoke dampers at locations as indicated on Drawings. Install with required perimeter mounting angles, sleeves, breakaway duct connections, corrosion resistant springs, bearings, bushings and hinges.

1. Install smoke dampers and combination smoke and fire dampers in accordance with NFPA 92A.
2. Install dampers square and free from racking with blades running horizontally.
3. Do not compress or stretch damper frame into duct or opening.
4. Handle damper using sleeve or frame. Do not lift damper using blades, actuator, or jack shaft.
5. Install bracing for multiple section assemblies to support assembly weight and to hold against system pressure. Install bracing as needed.

L. Install flexible connectors immediately adjacent to equipment in ducts associated with fans and motorized equipment supported by vibration isolators.

M. For fans developing static pressures of 5 inch wg and higher, cover flexible connectors with loaded vinyl sheet held in place with metal straps.

N. Connect flexible ducts to metal ducts with adhesive and draw bands.

O. Provide instrument test holes in ductwork at fan inlets and outlets and elsewhere as required by Testing, Adjusting and Balancing Contractor for testing and balancing purposes.

3.3 DEMONSTRATION

A. Division 01 - Execution and Closeout Requirements: Requirements for demonstration and training.

B. Demonstrate re-setting of fire dampers and combination fire/smoke dampers to Owner's representative.

END OF SECTION

SECTION 23 34 00

HVAC FANS

PART 1 - GENERAL

1.1 SUMMARY

A. Section Includes:

1. Power Ventilators.
2. Prefabricated roof curb.
3. Inline ceiling fans.
4. Duct blowers or cabinet fans.

B. Related Sections:

1. Division 23 - Vibration and Seismic Controls for HVAC and Plumbing Piping and Equipment: Product requirements for resilient mountings and snubbers for fans for placement by this section.
2. Division 23 - HVAC and Plumbing Insulation: Product requirements for power ventilators for placement by this section.
3. Division 23 - HVAC Ducts and Casings: Product requirements for hangers for placement by this section.
4. Division 23 - Air Duct Accessories: Product requirements for duct accessories for placement by this section.
5. Division 26 - Equipment Wiring Connections: Execution and product requirements for connecting equipment specified by this section.

1.2 REFERENCES

A. American Bearing Manufacturers Association:

1. ABMA 9 - Load Ratings and Fatigue Life for Ball Bearings.
2. ABMA 11 - Load Ratings and Fatigue Life for Roller Bearings.

B. Air Movement and Control Association International, Inc.:

1. AMCA 99 - Standards Handbook.
2. AMCA 204 - Balance Quality and Vibration Levels for Fans.
3. AMCA 210 - Laboratory Methods of Testing Fans for Aerodynamic Performance Rating.
4. AMCA 300 - Reverberant Room Method for Sound Testing of Fans.
5. AMCA 301 - Methods for Calculating Fan Sound Ratings from Laboratory Test Data.

C. American Refrigeration Institute:

1. ARI 1060 - Air-to-Air Energy Recovery Ventilation Equipment Certification Equipment Program.

D. National Electrical Manufacturers Association:

1. NEMA MG 1 - Motors and Generators.
2. NEMA 250 - Enclosures for Electrical Equipment (1000 Volts Maximum).

E. Underwriters Laboratories Inc.:

1. UL 705 - Power Ventilators.

1.3 SUBMITTALS

A. Division 01 - Submittal Procedures: Submittal procedures.

B. Shop Drawings: Indicate size and configuration of fan assembly, mountings, weights, ductwork and accessory connections.

C. Product Data: Submit data on each type of fan and include accessories, fan curves with specified operating point plotted, power, RPM, sound power levels for both fan inlet and outlet at rated capacity, electrical characteristics and connection requirements.

D. Manufacturer's Installation Instructions: Submit fan manufacturer’s instructions.

E. Manufacturer's Certificate: Certify products meet or exceed specified requirements.

F. Acceptance or no exceptions taken by the engineer on any substitution proposed by the contractor shall not be construed as relieving the contractor from compliance with the project's specifications and performance requirements nor departure there from. The contractor remains responsible for details and accuracy for confirming and correlating quantities and dimensions and for the selection of fabrication processes, techniques and assembly, coordination of his work with that of all other trades and making any needed modifications consequent to the substitution at his own cost and for performing the work in a safe manner.

1.4 CLOSEOUT SUBMITTALS

A. Division 01 - Execution and Closeout Requirements: Closeout procedures.

B. Operation and Maintenance Data: Submit instructions for lubrication, motor and drive replacement, spare parts list, and wiring diagrams.

1.5 QUALITY ASSURANCE

A. Performance Ratings: Conform to AMCA 210 and bear AMCA Certified Rating Seal.

B. Sound Ratings: AMCA 301, tested to AMCA 300, and bear AMCA Certified Sound Rating Seal.

C. UL Compliance: UL listed and labeled, designed, manufactured, and tested in accordance with UL 705.

D. Balance Quality: Conform to AMCA 204.

E. Energy Recovery Unit Wheel Energy Transfer Rating: Meet ARI 1060.

1.6 QUALIFICATIONS

A. Manufacturer: Company specializing in manufacturing products specified in this section with minimum three years documented experience.

B. Installer: Company specializing in performing Work of this section with minimum three years documented experience.

1.7 PRE-INSTALLATION MEETINGS

A. Division 01 - Administrative Requirements: Pre-installation meeting.

B. Convene minimum one week prior to commencing work of this section.

1.8 DELIVERY, STORAGE, AND HANDLING

A. Division 01 - Product Requirements: Product storage and handling requirements.

B. Protect motors, shafts, and bearings from weather and construction dust.

1.9 FIELD MEASUREMENTS

A. Verify field measurements prior to fabrication.

1.10 WARRANTY

A. Division 01 - Execution and Closeout Requirements: Product warranties and product bonds.

1.11 EXTRA MATERIALS

A. Division 01 - Execution and Closeout Requirements: Spare parts and maintenance products.

B. Furnish two sets of belts for each fan.

PART 2 - PRODUCTS

2.1 POWER VENTILATORS

A. Manufacturer:

1. Loren Cook
2. Greenheck
3. ACME
4. Penn Barry
5. Substitutions: Section 01 06 00 – Product Requirements.

B. General: Except as otherwise indicated, provide standard prefabricated power ventilator units of type and size indicated, modified as necessary to comply with requirements, and as required for complete installation.

C. Centrifugal Roof Ventilators: Provide centrifugal roof type, curb mounted, power ventilators of type, size, and capacity as scheduled, and as specified herein.

1. Type: Centrifugal fan, direct or belt driven as scheduled. Provide aluminum, weatherproof housings, low silhouette, statically and dynamically balanced, UL labeled and certified by AMCA. Provide square base to suit roof curb. Provide permanently lubricated type motor.
2. Housing Design: Hooded low contour type.
3. Provide high efficiency type motor. The motor and drive assembly shall be located out of the exhaust air system supported by a rugged galvanized steel frame. Motors shall be factory wired and installed with safety switches.
4. Electrical: Provide factory-wired non-fusible type disconnect switch at motor in fan housing. Provide thermal overload protection in fan motor. Provide conduit chase within unit for electrical connection. Motors shall have neoprene vibration isolator
5. Bird Screens: Provide removable bird screens, 1/2" mesh, 16-gage aluminum or brass wire.
6. Provide fabricated roof curb with integral backdraft dampers.

2.2 PREFABRICATED ROOF CURBS

A. Available Manufacturers: Subject to compliance with requirements, roof curbs that may be incorporated in the work shall be of same manufacture as fan.

B. General: Provide manufacturer's standard shop-fabricated units modified if necessary to comply with requirements.

C. Gage and Height: Fabricate units of metal gage and to height above roof surface as indicated. Where gage or height are not indicated, fabricate units of 14 gage metal, and nominal height of 14 inch. Provide treated wood nailer, not less than 1-5/8 inch thick and of width indicated, but not less than width of support wall assembly. Anchor nailer securely to top of metal frame unit. Provide lumber pressure treated with water-borne preservatives for "above ground" use, complying with AWPB LP-2.

D. Insulate units inside structural support wall with rigid glass fiber insulation board of approximately 3 pound density and 1-1/2 inch minimum thickness, except as otherwise indicated.

2.3 INLINE FANS

A. Manufacturers:

1. Loren Cook
2. Greenheck
3. ACME
4. Penn Barry

B. Substitutions: Section 01 61 00 – Product Requirements.

C. Fan shall be duct mounted, belt driven centrifugal cabinet fan with external motor mount.

D. Fan shall bear the AMCA certified ratings seal for sound and air performance.

E. The fan shall be of bolted and welded construction utilizing corrosion resistant fasteners. Housing shall be minimum 18 gauge galvanized steel with two access doors and integral duct collars. Internal blower assembly shall be mounted on rubber vibration isolators. Motor shall be out of the air stream. Hanging brackets shall be provided for horizontal installation. Unit shall bear an engraved aluminum nameplate.

F. Wheel shall be centrifugal backward inclined, constructed of 100% aluminum. Wheel shall be balanced in accordance with AMCA Standard 204-96.

G. Motor shall be heavy duty type with permanently lubricated sealed ball bearings and furnished at the specified voltage and phase.

H. Bearings shall be permanently lubricated, sealed ball type selected for a minimum L50 life in excess of 200,000 hours at maximum cataloged operating speed.

I. Belts shall be oil and heat resistant, non-static type. Drives shall be precision machined cast iron type, keyed and securely attached to the wheel and motor shafts. Drives shall be sized for 150% of the installed motor horsepower. The variable pitch motor drive must be factory set to the specified fan RPM.

2.4 CEILING FANS

A. Manufacturers:

1. Loren Cook
2. Greenheck
3. ACME
4. Penn Barry

B. Substitutions: Section 01 61 00 – Product Requirements.

C. Centrifugal Fan Unit: Direct driven with injection molded resin, galvanized steel housing, resilient mounted motor, gravity backdraft damper in discharge opening, integral outlet duct collar. Discharge position convertible by moving interchangeable panels.

D. Disconnect Switch: Fan mounted toggle switch for thermal overload protected motor.

E. Grille: Injection molded white plastic.

F. Wheel: Centrifugal forward curved type constructed of injection molded or polypropylene resin.

G. Motor: Open drip proof type with permanently lubricated sealed bearings and thermal overload protection.

H. Accessories:

1. Wall cap with damper, round duct rectangular duct (as shown on drawings) inlet.
2. Roof cap with roof curb.
3. Fan speed controller.

I. Performance:

1. Air Flow: As per drawings.
2. Static Pressure: As per drawings.
3. Fan RPM: As per drawings.
4. Sones: As per drawings.

PART 3 - EXECUTION

3.1 EXAMINATION

A. Division 01 - Administrative Requirements: Coordination and project conditions.

B. Verify roof curbs are installed and dimensions are as instructed by manufacturer.

3.2 PREPARATION

A. Furnish roof curbs to roofing contractor for installation.

3.3 INSTALLATION

A. Secure fans and gravity ventilators with stainless steel lag screws to roof curb or anchor the unit ash shown on the drawings.

B. Fans: Install flexible connections specified in Section 23 33 00 between fan and ductwork. Ensure metal bands of connectors are parallel with minimum one inch flex between ductwork and fan while running.

C. Install backdraft dampers on inlet to exhaust fans and gravity ventilators used in relief air applications where shown on the drawings and schedules.

D. Provide backdraft dampers on outlet from cabinet and ceiling fans and as indicated on Drawings.

E. Install safety screen where inlet or outlet is exposed.

F. Pipe scroll drains to nearest floor drain.

G. Install backdraft dampers on discharge of exhaust fans as indicated on Drawings. Refer to Section 23 33 00.

H. Provide sheaves required for final air balance.

I. Solder bottom joints and up 2 inches of side joints of duct under roof ventilator to prevent any moisture from entering ventilator.

3.4 MANUFACTURER'S FIELD SERVICES

A. Division 01 - Quality Requirements: Requirements for manufacturer’s field services.

B. Furnish services of factory trained representative for minimum of one days to start-up, calibrate controls, and instruct Owner on operation and maintenance.

3.5 CLEANING

A. Division 01 - Execution and Closeout Requirements: Requirements for cleaning.

B. Vacuum clean coils and inside of fan cabinet.

3.6 DEMONSTRATION

A. Division 01 - Execution and Closeout Requirements: Requirements for demonstration and training.

B. Demonstrate fan operation and maintenance procedures.

3.7 PROTECTION OF FINISHED WORK

A. Division 01 - Execution and Closeout Requirements: Requirements for protecting finished Work.

B. Do not operate fans for until ductwork is clean, filters in place, bearings lubricated, and fan has been test run under observation.

END OF SECTION

SECTION 23 37 00

AIR OUTLETS AND INLETS

PART 1 - GENERAL

1.1 SUMMARY

A. Section Includes:

1. Diffusers.
2. Registers
3. Grilles.
4. Door grilles.
5. Louvers.
6. Gravity roof ventilators.

B. Related Sections:

1. Division 08 - Louvers: Wall Louvers.
2. Division 09 - Painting and Coating: Execution and product requirements for Painting of ductwork visible behind outlets and inlets specified by this section.
3. Section 23 33 00 - Air Duct Accessories: Volume dampers for inlets and outlets.

1.2 REFERENCES

A. Air Movement and Control Association International, Inc.:

1. AMCA 500 - Test Methods for Louvers, Dampers, and Shutters.

B. American Society of Heating, Refrigerating and Air-Conditioning Engineers:

1. ASHRAE 70 - Method of Testing for Rating the Performance of Air Outlets and Inlets.

C. Sheet Metal and Air Conditioning Contractors:

1. SMACNA - HVAC Duct Construction Standard - Metal and Flexible.

1.3 SUBMITTALS

A. Division 01 - Submittal Procedures: Submittal procedures.

B. Product Data: Submit sizes, finish, and type of mounting. Submit schedule of outlets and inlets showing type, size, location, application, and noise level.

C. Test Reports: Rating of air outlet and inlet performance.

D. Manufacturer's Certificate: Certify products meet or exceed specified requirements.

E. Acceptance or no exceptions taken by the engineer on any substitution proposed by the contractor shall not be construed as relieving the contractor from compliance with the project's specifications and performance requirements nor departure there from. The contractor remains responsible for details and accuracy for confirming and correlating quantities and dimensions and for the selection of fabrication processes, techniques and assembly, coordination of his work with that of all other trades and making any needed modifications consequent to the substitution at his own cost and for performing the work in a safe manner.

1.4 CLOSEOUT SUBMITTALS

A. Division 01 - Execution and Closeout Requirements: Closeout procedures.

B. Project Record Documents: Record actual locations of air outlets and inlets.

1.5 QUALITY ASSURANCE

A. Test and rate diffuser, register, and grille performance in accordance with ASHRAE 70 and ADC 1062 “Certification, Rating and Test Manual”.

B. NFPA Compliance: Install air outlets in accordance with NFPA 90A “Standard for the Installation of Air Conditioning and Ventilation Systems”.

1.6 QUALIFICATIONS

A. Manufacturer: Company specializing in manufacturing products specified in this section with minimum five years documented experience.

1.7 PRE-INSTALLATION MEETINGS

A. Division 01 - Administrative Requirements: Pre-installation meeting.

B. Convene minimum one week prior to commencing work of this section.

1.8 WARRANTY

A. Division 01 - Execution and Closeout Requirements: Product warranties and product bonds.

1.9 EXTRA MATERIALS

A. Division 01 - Execution and Closeout Requirements: Spare parts and maintenance products.

PART 2 - PRODUCTS

2.1 CEILING AIR DIFFUSERS, REGISTERS, AND GRILLES

A. Acceptable Manufacturers:

1. Titus

2. Price
3. Krueger
4. Metal-Aire
5. Substitutions: Section 01 61 00 – Product Requirements.

B. General:

1. Grilles, registers, diffusers and appurtenances shall conform to requirements specified herein and shall be of type and sizes as specified and indicated on Drawings. Performance shall be in accordance with Air Diffusion Council Test Code 1602R2 including airflow velocity, pressure, temperature, and sound measurements. Noise level ratings shall be in accordance with ADC Test Code No. 1062RI and ASHRAE Standards 36 62 and 36B 3.
2. Sponge neoprene, rubber, vinyl or felt border gaskets shall be provided for surface-mounted registers, grilles or diffusers.
3. The noise generating characteristics of all specified grilles, registers, and diffusers shall be tested to, and comply with, all requirements of this specification. Representative samples shall be subjected to tests in accordance with applicable standards and procedures in order to demonstrate such compliance. A special test for this project is not required if the manufacturer has previous certified test results that can be made applicable to this project. Maximum Sound Levels of diffusers, grilles and registers shall be as follows:

a.	Administrative office area:	NC 30
b.	Classrooms:	NC 20
c.	Libraries and other noise sensitive areas:	NC 25
d.	Gymnasiums, cafeterias, lockers areas:	NC 30.

4. Provide suitable frame types to match the ceiling types as specified or indicated on the Architectural Drawings.
5. Ceiling diffusers shall be provided with equalizing deflectors.
6. Ceiling mounted grilles, registers and diffusers shall be provided with a factory applied, baked enamel, dull finish, bone white to match acoustical ceiling tile.
7. Grilles or registers mounted on painted walls or other surfaces shall be furnished with a baked prime coat and finish painted to match Architectural requirements.
8. Do not provide opposed blade dampers at diffusers and registers for to balance the airflow, as they tend to create noise. Provide a manual volume damper at each branch take-off and also at branch duct to each diffuser and register. Air throw patterns shall be as indicated on the drawings.
9. Diffusers, registers and grilles indicated or scheduled on the drawings to comply with special requirements shall take precedence over the standard items specified.

C. Performance: Provide ceiling air diffusers that have, as minimum, temperature and velocity traverses, throw and drop, and noise criteria ratings for each size device as listed in manufacturer's current data.

D. Finishes: Ceiling diffusers, registers and grilles: Finishes shall be coordinated with the Architect.

E. Diffusers and registers shall be provided with opposed blade volume dampers.

2.2 EXHAUST AND RETURN CEILING GRILLES

A. Acceptable Manufacturer:

1. Titus
2. Price
3. Krueger
4. Metal-Aire
5. Substitutions: Section 01 61 00 – Product Requirements.

B. Finish: Baked enamel, White or off-white as selected by the Architect.

C. Mounting: Surface mounted or Lay-in.

D. Provide filler panel when installed in 24” X 24” T-bar ceiling. Panel to match ceiling construction. For 24" x 48" T-bar ceilings, coordinate with ceiling installer for auxiliary tees as required to provide 24" x 24" space. Where full 24" x 24" grid module is not available, surface mount the outlet in center cut to fit ceiling tile.

E. Exhaust and return air registers and grilles, except as noted, shall be removable hinged perforated face plate with 24" x 24" nominal panel size and horizontal inlet flexible duct adapter, applicable to the ceiling it is installed.

2.3 EXHAUST AND RETURN SIDE WALL GRILLES

A. Acceptable Manufacturer:

1. Titus
2. Price
3. Krueger
4. Metal-Aire

B. Substitutions: Section 01 61 00 – Product Requirements Finish: Baked enamel, White or off-white as selected by the Architect.

C. Face Arrangement: ½ blade spacing, 35 degree Fixed deflection

D. Frame: 1 ¼” wide

E. Mounting: Side wall

2.4 CEILING SUPPLY DIFFUSERS

A. Acceptable Manufacturer:

1. Titus
2. Price
3. Krueger
4. Metal-Aire
5. Substitutions: Section 01 61 00 – Product Requirements.

B. Material: All Aluminum.

C. Finish: Baked enamel, White or off-white as selected by the Architect.

D. Pattern: Adjustable form 1-4 way throw.

E. Mounting: Surface mounted or Lay-in.

F. Provide filler panel when installed in 24” X 24” T-bar ceiling. Panel to match ceiling construction. For 24" x 48" T-bar ceilings, coordinate with ceiling installer for auxiliary tees as required to provide 24" x 24" space. Where full 24" x 24" grid module is not available, surface mount the outlet in center cut to fit ceiling tile.

G. Ceiling diffusers, except as noted, shall be perforated face plate modular core diffuser with removable hinged perforated face plate with 24" x 24" nominal panel size and horizontal inlet flexible duct adapter, applicable to the ceiling it is installed.

H. Ceiling diffusers in rooms without lay in T Bar ceiling shall have frame suitable for ceiling type and as approved by Architect/Engineer.

I. Ceiling diffusers with automatic fire dampers or combination smoke fire dampers where diffusers are installed in fire rated ceilings, shall be State Fire Marshal approved type. Rated enclosures between rated ceiling and fire dampers shall be provided by the Contractor under this Section.

2.5 SUPPLY SIDE WALL GRILLES

A. Acceptable Manufacturer:

1. Titus
2. Price
3. Krueger
4. Metal-Aire
5. Substitutions: Section 01 61 00 – Product Requirements.

B. Material: All Aluminum

C. Finish: Baked enamel, White or off-white as selected by the Architect.

D. Face Arrangement: 3/4 blade spacing Double Deflection Adjustable Airfoil Blades

E. Frame: 1 1/4” wide

F. Mounting: Side wall

G. Damper: Opposed blade damper

2.6 LINEAR SLOT SUPPLY AND RETURN CEILING DIFFUSERS

A. Acceptable Manufacturer:

1. Titus
2. Price
3. Krueger

4. Metal-Aire
5. Substitutions: Section 01 61 00 – Product Requirements.

B. Material: Aluminum.

C. Finish: White, baked enamel or off-white as selected by the Architect.

D. Size: Refer to the floor plans for number and size of the slots.

E. Plenum: 12-inch tall with external insulation and vapor barrier.

F. Blank-Offs: Provide blank off panels where diffuser is not activated

G. Mounting: Lay-in or surface mounted

H. Filter Mount: None

I. Pattern: Full 180 degree pattern controller (Adjustable)

J. Damper: Integral.

2.7 DIRECT SPIRAL DUCT MOUNTED SUPPLY GRILLES (FOR EXPOSED DUCTS IN THE MECHANICAL AND ELECTRICAL ROOMS)

A. Acceptable Manufacturer:

1. Titus
2. Price
3. Krueger
4. Metal-Aire
5. Substitutions: Section 01 61 00 – Product Requirements.

B. Material: Aluminum.

C. Finish: White, baked enamel.

D. Blade: ¾” Blade spacing

E. Mounting: Duct mounted on spiral duct

F. Filter Mount: None

G. Pattern: Double deflection

H. Damper: Opposed blade damper

2.8 DIRECT SPIRAL DUCT MOUNTED PERFORATED RETURN GRILLES (FOR EXPOSED DUCTS IN THE MECHANICAL AND ELECTRICAL ROOMS)

A. Acceptable Manufacturer:

1. Titus

2. Price
3. Krueger
4. Metal-Aire
5. Substitutions: Section 01 61 00 – Product Requirements.

B. Material: Aluminum.

C. Finish: White, baked enamel.

D. Face: Perforated Grille

E. Mounting: Duct mounted on spiral duct

F. Filter Mount: None

G. Pattern: Fixed

H. Damper: Opposed blade damper

2.9 LOUVERS

A. Louvers: As specified in Division 08.

2.10 GRAVITY ROOF VENTILATOR

A. General:

1. Ventilator shall be low silhouette gravity type.
2. Ventilator shall be Cook, Greenheck, U.S. Fan or approved equal.

B. Features:

1. Housing shall be heavy gauge aluminum and bird screening covering the opening. Top shall be aluminum.
2. Finish shall be aluminum.
3. Unit shall set on built-up roof curb.

PART 3 - EXECUTION

3.1 EXAMINATION

A. Division 01 - Administrative Requirements: Coordination and project conditions.

B. Verify inlet and outlet locations.

C. Verify ceiling and wall systems are ready for installation.

D. Verify exact air inlet and outlet type with equipment schedules on drawings and reflected ceiling plans.

3.2 INSTALLATION

A. Install diffusers to ductwork with airtight connection.

B. Install balancing dampers on duct take-off to diffusers, grilles, and registers, whether or not dampers are furnished as part of diffuser, grille, and register assembly. Refer to Division 23, Air Duct Accessories.

C. Paint visible portion of ductwork behind air outlets and inlets matte black. Refer to Division 09.

3.3 DIFFUSERS, REGISTERS AND GRILLES INSTALLATION

A. Coordination with Ceiling Features.

1. Install components to insure that all return air registers are located away from and in a neutral position with respect to any Television, computer station, refrigerators, stoves, microwave ovens, doors and windows. The thermostat will be located such that it senses the average return air temperature most accurately.

    a. These requirements and all components will be outlined on the shop drawings from the HVAC contractor early in the submittal phase for the approval of the design engineer.

2. Install all inlets and outlets as close as possible to that shown on the plans but adjust to fit into the ceiling materials shown on the Architectural, Electrical and Fire Sprinkler plans. All ceiling mounted inlet and outlet devices shall be of the side inlet design and insulated for noise control.
3. In dry wall and plaster ceilings, diffuser, register or grilled trim shall overlap the plaster line with adequate trim.
4. In ceilings with acoustic tile adhesively applied to drywall or plaster ceilings, furnish diffusers, registers or grilles with overlapping margins.
5. In perforated metal plate systems: Square or rectangular diffuser and grille edge trim shall be flush with the finished ceiling.
6. Furnish and install plaster frames for diffusers, grilles and registers which are located on finish plaster surfaces. Plaster frames for grilles and registers shall be set flush with the finished surface and attached to ductwork by hickey punching, with rivets or sheet metal screws. Grilles and registers shall be fastened to the frames with sheet metal screws. All inlet and outlet devices shall be Casketed for air tight mounting.
7. Provide any intake duct not protected by a louver, grille or register with a 1/4" mesh galvanized screen over open end.
8. Paint all ductwork visible through grilles, registers, and other openings with one coat of flat black paint.

3.4 INTERFACE WITH OTHER PRODUCTS

A. Check location of outlets and inlets and make necessary adjustments in position to conform to architectural features, symmetry, and lighting arrangement.

END OF SECTION

SECTION 23 40 00

HVAC AIR CLEANING DEVICES

PART 1 - GENERAL

1.1 SUMMARY

A. Section Includes:

1. Pre-filters.
2. Temporary construction filters.
3. Universal holding frames.

B. Related Sections:

1. Section 26 05 03 - Equipment Wiring Connections: Execution requirements for wiring products for placement by this section.

1.2 REFERENCES

A. Air-Conditioning and Refrigeration Institute:

1. ARI 850 - Commercial and Industrial Air Filter Equipment.

B. American Society of Heating, Refrigerating and Air-Conditioning Engineers:

1. ASHRAE 52.1 - Gravimetric and Dust-Spot Procedures for Testing Air-Cleaning Devices Used in General Ventilation for Removing Particulate Matter.

C. Military Standardization Documents:

1. MIL MIL-STD-282 - Filter Units, Protective Clothing, Gas-Mask Components, and Related Products: Performance-Test Methods.

D. Underwriters Laboratories Inc.:

1. UL 586 - High-Efficiency. Particulate, Air Filter Units.
2. UL 867 - Electrostatic Air Cleaners.
3. UL 900 - Air Filter Units.

1.3 PERFORMANCE REQUIREMENTS

A. Conform to ARI 850 Section 7.4.

1.4 SUBMITTALS

A. Division 01 - Submittal Procedures: Submittal procedures.

B. Shop Drawings: Indicate filter assembly and filter frames, dimensions, motor locations, and electrical characteristics and connection requirements.

C. Product Data: Submit data on filter media, filter performance data, dimensions, and electrical characteristics.

D. Manufacturer's Installation Instructions: Submit assembly and change-out procedures.

E. Manufacturer's Certificate: Certify products meet or exceed specified requirements.

F. Acceptance or no exceptions taken by the engineer on any substitution proposed by the contractor shall not be construed as relieving the contractor from compliance with the project's specifications and performance requirements nor departure there from. The contractor remains responsible for details and accuracy for confirming and correlating quantities and dimensions and for the selection of fabrication processes, techniques and assembly, coordination of his work with that of all other trades and making any needed modifications consequent to the substitution at his own cost and for performing the work in a safe manner.

1.5 CLOSEOUT SUBMITTALS

A. Division 01 - Execution and Closeout Requirements: Closeout procedures.

B. Operation and Maintenance Data: Submit instructions for operation, changing, and periodic cleaning.

1.6 QUALIFICATIONS

A. Manufacturer: Company specializing in manufacturing products specified in this section with minimum ten years documented experience.

B. Installer: Company specializing in performing Work of this section with minimum three years documented experience.

1.7 PRE-INSTALLATION MEETINGS

A. Division 01 - Administrative Requirements: Pre-installation meeting.

B. Convene minimum one week prior to commencing work of this section.

1.8 WARRANTY

A. Division 01 - Execution and Closeout Requirements: Product warranties and product bonds.

B. Furnish one year manufacturer warranty for air cleaning devices.

1.9 EXTRA MATERIALS

A. Division 01 - Execution and Closeout Requirements: Spare parts and maintenance products.

B. Furnish one set of disposable panel filters.

PART 2 - PRODUCTS

2.1 MANUFACTURERS

A. Filtration Group – Aerostar

B. Flanders Filters Inc.

C. Burke Environmental

D. Cam-Fil/Farr Company

E. American Air Filter

F. Or equal

2.2 FILTERS

A. Types.

1. Filter shall be AAF AMAir 62 Plus with Intersept or equal. Panel filter shall be cotton polyester pleat which exceeds ASHRAE 62-1989 R Standards for minimum filtration efficiency of Merv13 with Intercept, (durable, low toxicity, broad spectrum antimicrobial that inhibits the growth of mildew, bacteria, and fungi on filter media).
2. Filter face velocity shall not exceed 300 FPM at nominal airflows.
3. Filter shall be U.L. fisted Class 2.
4. Filter shall have a maximum rating as follows: flame spread 25, fuel contribution 50, smoke development 50.
5. Provide the larger of a minimum of (24) spare filters, or one filter for each unit supplied, delivered to the Owner.

B. Certification:

1. Include an individual test report for each type of filter prepared by an independent testing laboratory with test equipment specified in ASHRAE Standard 52 81 using a 24 1/ x 24 1/2" duct section for the filter under test.
2. Each test report shall include filter descriptive information and assurance that the construction and performance is in accordance with the Specifications.
3. All filters tested shall have been procured by the independent testing laboratory from the open market independent of the manufacturer of these filters, and a statement of this fact shall accompany the submittal along with the test report.

2.3 FILTER GAUGES

A. The HVAC Contractor shall purchase and install gauges on the HVAC equipment. The Gages shall be of the diaphragm actuated differential pressure type, Dwyer Series 2000 Magnehelic.

B. Gauges shall have a 4 1/2" dial face, white with black numbers, graduations and pointer.

C. Gauges shall be capable of being calibrated.

D. Select range to operate at not more than 85% of dial range at filter maximum change out static pressure differential not less than 25% of range for new filters with minor divisions of .05" wc.

E. Install adjustable signal flags on each gauge.

PART 3 - EXECUTION

3.1 INSTALLATION

A. Furnish units complete with start-up filters, retainer frames and housing certified to meet design requirements. The HVAC Sub-Contractor shall install them in the units prior to air balance.

B. Install all air cleaning devices in accordance with approved shop drawings and the manufacturer’s printed recommendations

C. Install differential magnehelic pressure gauges across each filter bank.

D. Prevent passage of unfiltered air around filters with felt, rubber, or neoprene gaskets.

E. Do not operate fan system until filters (temporary) are in place. Replace temporary filter used during construction.

F. Install static pressure tip on the upstream side in an unobstructed area and not obstructing the removal of filters. Sensor on downstream side shall be a perforated tube traversing the filter face. Mount filter gages on outside of filter housing or filter plenum, in accessible position. Adjust and level.

G. Provide alarm to indicate the time for change-out. Typical or all filter banks.

H. Filter banks shall be installed without any measurable air leakages

3.2 TEMPORARY AND CONSTRUCTION FILTERS

A. Provide (4) sets of 1-1/2 inch polyester media blankets to protect all pre filter banks during the construction period. Provide two (2) sets MERV8 filters for use in the pre filter bank during the construction period. At no time during the construction period are systems to be operated without blanket filters and filters.

B. Blanket polyester media shall be used in conjunction with filters at all times

C. The Contractor shall provide continuous maintenance of the temporary filters in all units during the entire construction, start-up, testing, and final acceptance activities. The Contractor shall provide additional temporary filters as necessary to facilitate completion of all start-up, testing and commissioning activities.

D. After completion of the testing of the air handling equipment and systems and approval of same, but before final acceptance of the project, replace all filters and

ensure that the correct quantity of spare filters are stored on site and signed for by the MUSD Project Management Team.

END OF SECTION

SECTION 23 51 00

`BREACHING CHIMNEYS, AND STACKS

PART 1 - GENERAL

PRODUCT DATA SHEET 0 - Drawings and general provisions of the Contract, including General and Supplementary Conditions and Division 01 Specification Sections, apply to this Section.

1.1 SUMMARY

A. Section Includes:

1. Type B double wall gas vents.
2. Double wall metal stacks.

B. Related Sections:

1. Section 03 10 00 - Concrete Forming and Accessories: Execution requirements for inserts specified by this section.
2. Section 03 30 00 - Cast-In-Place Concrete: Concrete for stack foundations.
3. Section 22 34 00 - Fuel-Fired Domestic Water Heaters: Water heaters using breeching, chimneys, and stacks.
4. Section 23 05 13 - Common Motor Requirements for HVAC Equipment: Product requirements for draft fan motors for placement by this section.
5. Section 23 05 29 - Hangers and Supports for HVAC Piping and Equipment: Product requirements for hangers and supports for placement by this section.
6. Section 23 07 00 - HVAC Insulation: Execution requirements for insulation specified by this section.

1.2 REFERENCES

A. American National Standards Institute:

B. ASTM International:

1. ASTM A240/A240M - Standard Specification for Chromium and Chromium-Nickel Stainless Steel Plate, Sheet, and Strip for Pressure Vessels and for General Applications.
2. ASTM A666 - Standard Specification for Annealed or Cold-Worked Austenitic Stainless Steel Sheet, Strip, Plate, and Flat Bar.
3. ASTM A653/A653M - Standard Specification for Steel Sheet, Zinc-Coated (Galvanized) or Zinc-Iron Alloy-Coated (Galvannealed) by the Hot-Dip Process.
4. A1011/A1011M-07 Standard Specification for Steel, Sheet and Strip, Hot-Rolled, Carbon, Structural, High-Strength Low-Alloy, High-Strength Low-Alloy with Improved Formability, and Ultra-High Strength
5. ASTM C401 - Standard Classification of Alumina and Alumina-Silicate Castable Refractories.

C. National Fire Protection Association:

1. NFPA 31 - Standard for the Installation of Oil-Burning Equipment.
2. NFPA 54 - National Fuel Gas Code.
3. NFPA 211 - Standard for Chimneys, Fireplaces, Vents, and Solid Fuel Burning Appliances.

D. Sheet Metal and Air Conditioning Contractors:

1. SMACNA - Guide for Steel Stack Construction.
2. SMACNA - HVAC Duct Construction Standard - Metal and Flexible.

E. Underwriters Laboratories Inc.:

1. UL 103 - Factory-Built Chimneys for Residential Type and Building Heating Appliances.
2. UL 127 - Factory-Built Fireplaces.
3. UL 378 - Draft Equipment.
4. UL 441 - Gas Vents.
5. UL 641 - Type L Low-Temperature Venting Systems.
6. UL 959 - Medium Heat Appliance Factory Built Chimneys.

1.3 DEFINITIONS

A. Breeching: Vent Connector.

B. Chimney: Primarily vertical shaft enclosing at least one vent for conducting flue gases outdoors.

C. Smoke Pipe: Round, single wall vent connector.

D. Vent: Portion of a venting system designed to convey flue gases directly outdoors from a vent connector or from an appliance when a vent connector is not used.

E. Vent Connector: Part of a venting system that conducts the flue gases from the flue collar of an appliance to a chimney or vent, and may include a draft control device.

1.4 DESIGN REQUIREMENTS

A. Design refractory lined metal stacks for wind loading of 110 mphand seismic loads for Zone 4.

1.5 SUBMITTALS

A. Division 01 - Submittal Procedures: Submittals procedures.

B. Shop Drawings: Indicate general construction, dimensions, weights, support and layout of breeching. Submit layout drawings indicating plan view and elevations [where factory built unit is used] [; signed and sealed by professional engineer].

C. Product Data: Submit data indicating factory built chimneys, including dimensional details of components and flue caps, dimensions and weights, electrical characteristics and connection requirements.

D. Product Data: Submit data on fans and accessories including fan curves with specified operating point plotted, power, RPM, and electrical characteristics and connection requirements.

E. Samples: one sample in size illustrating finish of chimney and general appearance including flue cap.

F. Manufacturer's Installation Instructions: Submit assembly, support details, and connection requirements.

G. Manufacturer's Certificate: Certify products meet or exceed specified requirements.

1.6 QUALITY ASSURANCE

A. Perform Work in accordance with State of standard.

B. Maintain one copy of each document on site.

C. Provide factory built vents and chimneys used for venting natural draft appliances complying with NFPA 211 and UL listed and labeled.

1.7 QUALIFICATIONS

A. Manufacturer: Company specializing in manufacturing products specified in this section with minimum three years [documented] experience.

B. Installer: Company specializing in performing Work of this section with minimum three years documented experience approved by manufacturer.

1.8 PRE-INSTALLATION MEETINGS

A. Division 01 - Administrative Requirements: Pre-installation meeting.

B. Convene minimum one week prior to commencing work of this section.

1.9 ENVIRONMENTAL REQUIREMENTS

A. Division 01 - Product Requirements.

B. Maintain water integrity of roof during and after installation of chimney or vent.

1.10 FIELD MEASUREMENTS

A. Verify field measurements prior to fabrication.

1.11 WARRANTY

A. Division 01 - Execution and Closeout Requirements: Product warranties and product bonds.

B. Furnish five year manufacturer warranty for manufactured units.

PART 2 - PRODUCTS

2.1 TYPE B DOUBLE WALL GAS VENTS

A. Manufacturers:

1. Parker Boiler
2. Fabrication: Inner pipe of sheet aluminum, and outer pipe of galvanized sheet steel, tested in compliance with UL 441.

2.2 DOUBLE WALL METAL STACKS

A. Manufacturers:

1. Parker Boiler.
2. Substitutions: [Allowed

B. Furnish materials in accordance with State standards.

C. Furnish double wall metal stacks, tested to UL 103 UL 127 UL 641 and UL listed, for use with building heating equipment, in compliance with NFPA 211.

D. Fabricate with 1 inch minimum air space between walls. Construct inner jacket of 20 gage ASTM A240/A240M or ASTM A666Type 304 Type 316 stainless steel. Construct outer jacket of aluminum coated steel [Type 304 Type 316 stainless steel 24 gage for sizes 10 inches to 24 inches and 20 gage for sizes 28 inches to 48 inches.

E. Accessories, UL labeled:

1. Ventilated Roof Thimble: Consists of roof penetration, vent flashing with spacers and storm collar.
2. Exit Cone: Consists of inner cone, and outer jacket, to increase stack exit velocity 1.5 times.
3. Stack Cap: Consists of conical rainshield with inverted cone for partial rain protection with low flow resistance.

PART 3 - EXECUTION

3.1 PREPARATION

A. Install concrete inserts for support of breeching, chimneys, and stacks in coordination with formwork.

3.2 INSTALLATION

A. Install in accordance with NFPA 54NFPA 31SMACNA Guide for Steel Stack Construction.

B. Install Work in accordance with State and local standards.

C. Install breeching with minimum of joints. Align accurately at connections, with internal surfaces smooth.

D. Support breeching from building structure, rigidly with suitable ties, braces, hangers and anchors to hold to shape and prevent buckling. Support vertical breeching, chimneys, and stacks at 12 foot spacing, to adjacent structural surfaces, or at floor penetrations. Refer to SMACNA HVAC Duct Construction Standards - Metal and Flexible for equivalent duct support configuration and size.

E. Install stacks on concrete foundations. Refer to Section 03 30 00.

F. Pitch breeching with positive slope up from fuel-fired equipment to chimney or stack.

G. Coordinate installation of dampers, and induced draft fans.

H. Insulate breeching in accordance with Section 23 07 00.

I. For Type B double wall gas vents, maintain UL listed minimum clearances from combustibles. Assemble pipe and accessories for complete installation.

J. Install vent dampers, locating close to draft hood collar, and secured to breeching.

K. Assemble and install stack sections in accordance with NFPA 82, industry practices, and in compliance with UL listing. Join sections with acid-resistant joint cement. Connect base section to foundation using anchor lugs.

L. Level and plumb chimney and stacks.

M. Clean breeching, chimneys, and stacks during installation, removing dust and debris.

N. Install slip joints allowing removal of appliances without removal or dismantling of breeching, breeching insulation, chimneys, or stacks.

O. Provide [minimum length] [maximum 2 feet] of breeching to connect appliance to chimney. [Provide Type B chimney continuously from appliances.]

P. Extend vent above roof in accordance with applicable code.

Q. Maximum Vent Horizontal Distance: 75 percent of vent vertical distance.

R. Where appliance requires draft hood or barometric control device, install manufacturer furnished listed devices in accordance with manufacturer's instructions and applicable code.

END OF SECTION

SECTION 23 74 13

PACKAGED ROOFTOP AIR CONDITIONING UNITS

PART 1 - GENERAL

1.1 REFERENCES

A. NFPA 90 A & B - Installation of Air Conditioning and Ventilation Systems and Installation of Warm Air Heating and Air Conditioning Systems. (all)

B. ANSI/ASHRAE 15 - Safety Code for Mechanical Refrigeration. (all)

C. AHRI 360 - Commercial and Industrial Unitary Air Conditioning Equipment testing and rating standard. (g/e, c/e above 135,000 btuh)

D. AHRI 340 - Commercial and Industrial Unitary Heat pump Equipment. (hp above 135,000 btuh)

E. ANSI/ASHRAE 37 - Testing Unitary Air Conditioning and Heat Pump Equipment. (all)

F. ANSI/ASHRAE/IESNA 90.1-1999 - Energy Standard for New Buildings Except Low-Rise Residential Buildings.

G. ANSI Z21.47/UL1995 - Unitary Air Conditioning Standard for safety requirements.

H. California Energy Commission Administrative Code - Title 20/24 - Establishes the minimum efficiency requirements for HVAC equipment installed in new buildings in the State of California. (all)

I. AHRI 210/240 - Unitary Air-Conditioning Equipment and Air- Source Heat Pump Equipment. (all under 135,000 btuh)

J. AHRI 270 - Sound Rating of Outdoor Unitary Equipment. (all below 135,000)

K. AHRI 370 - Sound Rating of Large Outdoor Refrigerating and Air Conditioning Equipment. (all above 135,000 Btuh)

L. ANSI/NFPA 70-1995 - National Electric Code. (all)

1.2 SUBMITTALS

A. Submit unit performance data including: capacity, nominal and operating performance.

1.3 DELIVERY, STORAGE and HANDLING

A. Comply with manufacturer's installation instructions for rigging, unloading, and transporting units.

1.4 WARRANTY

A. Provide parts warranty (excluding refrigerant) for one year from start-up or 18 months from shipment, whichever occurs first.

B. Provide five-year extended warranty for compressors.

C. Provide five-year heat exchanger limited warranty.

1.5 REGULATORY REQUIREMENTS

A. Unit shall conform to ANSI Z21.47/UL1995 for construction of packaged air conditioner.

1. In the event the unit is not UL approved, the manufacturer must, at his expense, provide for a field inspection by a UL representative to verify conformance to UL standards. If necessary, contractor shall perform modifications to the unit to comply with UL, as directed by the UL representative, at no additional expense to the Owner.
2. Equipment shall be supplied as factory direct by manufacturer. Dealer and/ or distributor provided equipment will not be acceptable.
3. Manufacturer shall maintain a minimum of (8) factory direct service technicians and a parts store within a 75 mile radius from the jobsite to ensure timely on-site assistance and minimize equipment downtime.
4. Manufacturer shall provide a factory direct service agency with a 24 hour Emergency Support.
5. Manufacturer shall provide local factory direct representative for engineering, installation, controls and design support.

PART 2 - PRODUCTS

2.1 SUMMARY

A. The contractor shall furnish and install package rooftop unit(s) as shown and scheduled on the contract documents. The unit(s) shall be installed in accordance with this specification and perform at the specified conditions as scheduled.

B. APPROVED MANUFACTURERS

1. Approved manufacturer shall be Trane, with pre-approved alternates York and Carrier considered. Alternates must comply with all performance and features as called for in this specification. Job awarded on basis of specified equipment. Alternate will be evaluated and considered after job is awarded.
2. Manufacturer must clearly define any exceptions made to Plans and Specifications. Any deviations in layout or arrangement shall be submitted to consulting engineer prior to bid date. Acceptance of deviation(s) from specifications shall be in the form of written approval from the consulting engineer. Mechanical Contractor is responsible for expenses that occur due to exceptions made.

2.2 GENERAL UNIT DESCRIPTION

A. Unit(s) furnished and installed shall be gas electric packaged rooftop (s) as scheduled on contract documents and these specifications. Cooling capacity ratings shall be based on AHRI. Unit(s) shall consist of insulated weather-tight casing with compressor(s), air-cooled condenser coil, condenser fans, evaporator coil, return-air filters, supply motors and unit controls.

B. Unit(s) shall be 100% factory run tested and fully charged with R-410A.

C. Units shall be convertible airflow design as manufactured.

2.3 UNIT CASING

A. Cabinet: Galvanized steel, phosphatized, and finished with an air-dry paint coating with removable access panels. Structural members shall be 18 gauge with access doors and removable panels of minimum 20 gauge.

B. Units cabinet surface shall be tested 1000 hours in salt spray test in compliance with ASTM B117.

C. Cabinet top cover shall be one piece construction or where seams exits, it shall be double-hemmed and gasket-sealed.

D. Access Panels: Water- and air-tight panels with handles shall provide access to filters, heating section, return air fan section, supply air fan section, evaporator coil section, and unit control section.

E. Units base pan shall have a raised 1 1/8 inch high lip around the supply and return openings for water integrity.

F. Insulation: Provide 1/2 inch thick fiberglass insulation with foil face on all exterior panels in contact with the return and conditioned air stream. All edges must be captured so that there is no insulation exposed in the air stream.

G. Provide openings either on side of unit or through the base for power, control, condensate, and gas connections.

2.4 AIR FILTERS

A. Air Filters: Factory installed filters shall mount integral within the unit and shall be accessible through access panels. One-inch thick glass fiber disposable media filters shall be provided with the provisions within the unit for Merv 13 two inch thick filters to be field- provided and installed.

2.5 FANS AND MOTORS

A. Provide evaporator fan section with forward curved, double width, double inlet, centrifugal type fan.

B. Provide self-aligning, grease lubricated, ball or sleeve bearings with permanent lubrication fittings.

C. Provide units 5 tons and below with direct drive, multiple speed, dynamically balanced supply fans.

D. Provide units 6 tons and above with belt driven, supply fans with adjustable motor sheaves.

E. Outdoor and Indoor Fan shall be permanently lubricated and have internal thermal overload protection.

F. Outdoor fans shall be direct drive, statically and dynamically balanced, draw through in the vertical discharge position.

G. Provide shafts constructed of solid hot rolled steel, ground and polished, with key-way, and protectively coated with lubricating oil.

2.6 GAS FIRED HEATING SECTION

A. Completely assembled and factory installed heating system shall be integral to unit, UL or CSA approved specifically for outdoor applications for use downstream from refrigerant cooling coils. Threaded connection with plug or cap provided. Provide capability for gas piping.

B. Induced draft combustion type with direct spark ignition system, redundant main gas valve, and 2-staged heat.

C. Gas Burner Safety Controls: Provide safety controls for the proving of combustion air prior to ignition, and continuous flame supervision. Provide flame rollout switches.

D. Induced draft blower shall have combustion air proving switches and built-in thermal overload protection on fan motor.

E. Heat Exchanger: Provide tubular section type constructed from 18-gauge aluminized steel.

F. Limit controls: High temperature limit controls will shut off gas flow in the event of excessive temperatures resulting from restricted indoor airflow or loss of indoor airflow.

2.7 EVAPORATOR COIL

A. Provide configured aluminum fin surface mechanically bonded to copper tubing coil.

B. Provide an independent expansion device for each refrigeration circuit. Factory pressure tested at 450 psig and leak tested at 200 psig.

C. Provide a removable, reversible, cleanable double sloped drain pan for base of evaporator coil constructed of PVC.

2.8 CONDENSER SECTION

A. Provide vertical discharge, direct drive fans with aluminum blades. Fans shall be statically balanced. Motors shall be permanently lubricated, with integral thermal overload protection in a weather tight casing.

2.9 REFRIGERATION SYSTEM

A. Compressor(s): Provide scroll compressor with direct drive operating at 3600 rpm. Integral centrifugal oil pump. Provide suction gas cooled motor with winding temperature limits and compressor overloads.

B. Units shall have cooling capabilities down to 0 degree F as standard. For field-installed low ambient accessory, the manufacturer shall provide a factory-authorized service technician that will assure proper installation and operation.

C. Provide each unit with refrigerant circuit(s) factory-supplied completely piped with liquid line filter-drier, suction and liquid line pressure ports.

D. For heat pump units, provide reversing valve, discharge muffler, flow control check valve, and electronic adaptive demand defrost control on all units.

2.10 EXHAUST/RETURN SECTION

A. Provide, on down flow units above 6 tons, a factory supplied field installed 100% relief power exhaust assembly that shall assist the barometric relief damper in the economizer in relieving building pressurization.

2.11 OPERATING CONTROLS

A. Provide microprocessor unit-mounted DDC control which when used with an electronic zone sensor provides proportional integral room control. This UCM shall perform all unit functions by making all heating, cooling, and ventilating decisions through resident software logic.

B. Provide factory-installed indoor evaporator defrost control to prevent compressor slugging by interrupting compressor operation.

C. Provide an anti-cycle timing and minimum on/off between stages timing in the microprocessor.

D. Economizer Preferred Cooling (if supplied with economizer) - Compressor operation is integrated with economizer cycle to allow mechanical cooling when economizer is not adequate to satisfy zone requirements. Compressors are enabled if space temperature is recovering to cooling setpoint at a rate of less than 0.2 degrees per minute. Compressor low ambient lockout overrides this function.

PART 3 - EXECUTION

3.1 EXAMINATION

A. Verify roof curbs are installed and dimensions are as shown on shop drawings.

3.2 INSTALLATION

A. Roof Curb:

1. Assemble roof curb.
2. Install roof curb level.
3. Coordinate curb installation and flashing.
4. Install units on roof curb providing watertight enclosure to protect ductwork and utility services.
5. Install gasket material between unit base and roof curb.

B. Connect units to supply and return ductwork with flexible connections.

C. Install condensate piping with trap and route from drain pan to a code approved receptor.

D. Install components furnished loose for field mounting.

E. Install electrical devices furnished loose for field mounting.

F. Install control wiring between unit and field installed accessories.

G. Provide sheaves required for final air balance.

3.3 INSTALLATION - NATURAL GAS HEATING SECTION

A. Connect natural gas piping in accordance with NFPA 54.

B. Connect natural gas piping to unit, full size of unit gas train inlet. Arrange piping with clearances for burner service.

C. Install the following piping accessories on natural gas piping connections.

1. Strainer.
2. Pressure gage.
3. Shutoff valve.
4. Pressure reducing valve.

3.4 MANUFACTURER'S FIELD SERVICES

A. Furnish services of factory trained representative for minimum of one days to leak test, refrigerant pressure test, evacuate, dehydrate, charge, start-up, calibrate controls, and instruct Owner on operation and maintenance.

3.5 CLEANING

A. Vacuum clean coils and inside of cabinets.

B. Install new throwaway filters in units at Substantial Completion.

3.6 DEMONSTRATION

A. Demonstrate unit operation and maintenance.

B. Furnish services of manufacturer's technical representative for one 8 hour day to instruct Owner's personnel in operation and maintenance of units. Schedule training with Owner, provide at least 7 days notice to Architect/Engineer of training date.

END OF SECTION

SECTION 23 81 26

SPLIT-SYSTEM AIR-CONDITIONERS

PART 1 - GENERAL

1.1 SUMMARY

A. Section Includes:

1. Split heat pump units
2. Condensing unit.

B. Related Sections:

1. Section 03 30 00 - Cast-In-Place Concrete: Execution requirements for concrete foundations specified by this section.
2. Section 23 05 48 - Vibration and Seismic Controls for HVAC Piping and Equipment: Vibration isolators.
3. Section 23 09 23 - Direct-Digital Control System for HVAC: Controls remote from unit.
4. Section 23 21 13 - Hydronic Piping: Execution requirements for connection to hot water and drain piping specified by this section.
5. Section 23 23 00 - Refrigerant Piping: Execution requirements for connection to refrigerant piping specified by this section.
6. Section 23 33 00 - Air Duct Accessories: Flexible connections.
7. Section 25 50 00 - Integrated Automation Facility Controls: Control systems remote from unit.
8. Section 26 05 03 - Equipment Wiring Connections: Electrical connection to units.

1.2 REFERENCES

A. Air-Conditioning and Refrigeration Institute:

1. ARI 210/240 - Unitary Air-Conditioning and Air-Source Heat Pump Equipment.
2. ARI 270 - Sound Rating of Outdoor Unitary Equipment.
3. ARI 340/360 - Commercial and Industrial Unitary Air-Conditioning and Heat Pump Equipment.
4. ARI 365 - Commercial and Industrial Unitary Air-Conditioning Condensing Units.

B. American Society of Heating, Refrigerating and Air-Conditioning Engineers:

1. ASHRAE 52.1 - Gravimetric and Dust-Spot Procedures for Testing Air-Cleaning Devices Used in General Ventilation for Removing Particulate Matter.
2. ASHRAE 90.1 - Energy Standard for Buildings Except Low-Rise Residential Buildings.

C. ASTM International:

1. ASTM B117 - Standard Practice for Operating Salt Spray (Fog) Apparatus.

D. National Electrical Manufacturers Association:

1. NEMA MG 1 - Motors and Generators.

E. National Fire Protection Association:

1. NFPA 90A - Standard for the Installation of Air Conditioning and Ventilating Systems.

1.3 SUBMITTALS

A. Section 01 33 00 - Submittal Procedures: Submittal procedures.

B. Product Data: Submit data indicating:

1. Cooling and heating capacities.
2. Dimensions.
3. Weights.
4. Rough-in connections and connection requirements.
5. Electrical requirements with electrical characteristics and connection requirements.
6. Controls.
7. Accessories.

C. Manufacturer's Installation Instructions: Submit assembly, support details, connection requirements, and include start-up instructions.

D. Manufacturer's Certificate: Certify Products meet or exceed specified requirements.

E. Manufacturer’s Field Reports: Submit start-up report for each unit.

1.4 CLOSEOUT SUBMITTALS

A. Section 01 73 00 – Execution Requirements and Section 01 77 00 – Closeout Requirements Closeout procedures.

B. Project Record Documents: Record actual locations of controls installed remotely from units.

C. Operation and Maintenance Data: Submit manufacturer's descriptive literature, operating instructions, installation instructions, and maintenance and repair data.

1.5 QUALITY ASSURANCE

A. Performance Requirements: Energy Efficiency Rating (EER) not less than prescribed by ASHRAE 90.1 when used in combination with compressors and evaporator coils when tested in accordance with ARI 210/240.

B. Cooling Capacity: Rate in accordance with ARI 210/240.

C. Sound Rating: Measure in accordance with ARI 270.

D. Insulation and adhesives: Meet requirements of NFPA 90A.

E. Perform Work in accordance with State of California standards.

F. Maintain one copy of each document on site.

1.6 QUALIFICATIONS

A. Manufacturer: Company specializing in manufacturing products specified in this section with minimum three years documented experience.

B. Installer: Company specializing in performing Work of this section with minimum three years documented experience approved by manufacturer.

1.7 PRE-INSTALLATION MEETINGS

A. Section 01 31 00 – Project Management and Coordination: Pre-installation meeting.

B. Convene minimum one week prior to commencing work of this section.

1.8 DELIVERY, STORAGE, AND HANDLING

A. Section 01 61 00 - Product Requirements: Requirements for transporting, handling, storing, and protecting products.

B. Accept units and components on site in factory protective containers, with factory shipping skids and lifting lugs. Inspect for damage.

C. Comply with manufacturer's installation instruction for rigging, unloading and transporting units.

D. Protect units from weather and construction traffic by storing in dry, roofed location.

1.9 COORDINATION

A. Section 01 31 00 – Project Management and Coordination: Requirements for coordination.

B. Coordinate installation of condensing units with roof structure.

C. Coordinate installation of air handling units with building structure.

1.10 WARRANTY

A. Section 01 73 00 – Execution Requirements and Section 01 77 00 – Closeout Requirements: Requirements for warranties.

B. Furnish five year manufacturer’s warranty for compressors.

1.11 MAINTENANCE SERVICE

A. Section 01 73 00 – Execution Requirements and Section 01 77 00 – Closeout Requirements: Requirements for maintenance service.

B. Furnish service and maintenance of equipment for one year from Date of Substantial Completion. Include maintenance items as shown in manufacturer's operating and maintenance data, including filter replacements, fan belt replacement, and controls checkout and adjustments.

C. Furnish 24-hour emergency service on breakdowns and malfunctions for this maintenance period. Furnish capability of response time within hours.

1.12 MAINTENANCE MATERIALS

A. Section 01 73 00 – Execution Requirements and Section 01 77 00 – Closeout Requirements: Requirements for maintenance materials.

PART 2 - PRODUCTS

2.1 SPLIT SYSTEM AIR CONDITIONING UNITS

A. Manufacturers:

1. Daikin
2. Mitsubishi
3. Substitutions: Section 01 61 00 - Product Requirements.

B. Product Description: Split system consisting of air handling unit or fan coil unit and condensing unit including cabinet, evaporator fan, refrigerant cooling coil, compressor, refrigeration circuit, condenser, air filters, controls, air handling unit accessories, condensing unit accessories, and refrigeration specialties.

C. Provide all factory sized and approved installation components and controls including refrigerant piping, heat recovery boxes, and all field supplied components ductwork, insulation, condensate pump and drain. Make-up outside air shall be ducted to each fan coil as required per T24 from dedicated outside air unit as required.

D. Refrigerant Pipe and Pipe Fittings: ACR grade type K & L hard drawn copper piping with brazed wrought copper solder pressure fittings when exposed to view, may be soft annealed concealed to view. Install all piping as recommended and specified by the equipment manufacturer and as necessary for a complete installation and warranty. Insulation shall be Owens Corning Certainteed FSK & continuous vapor barrier in PVC, stainless steel or aluminum jacket, and pre-molded insulated fitting covers. Staples and other penetrations not allowed.

2.2 FAN COIL UNIT

A. General: Indoor, direct-expansion, wall-mounted fan coil. Unit shall be complete with cooling/heating coil, fan, fan motor, piping connectors, electrical controls,

microprocessor control system, and integral temperature sensing. Unit shall be furnished with integral wall mounting bracket and mounting hardware.

B. Unit Cabinet: Cabinet discharge and inlet grilles shall be attractively styled, high-impact polystyrene. Cabinet shall be fully insulated for improved thermal and acoustic performance.

C. Fans:

1. Fan shall be tangential direct-drive blower type with air intake at the top of the unit and discharge at the bottom front. Automatic, motor-driven vertical air sweep shall be provided standard.
2. Air sweep operation shall be user selectable. The vertical sweep may be adjusted (using the remote control) and the horizontal air direction may be set manually.

D. Coil: Coil shall be copper tube with aluminum fins and galvanized steel tube sheets. Fins shall be bonded to the tubes by mechanical expansion. A drip pan under the coil shall have a drain connection for hose attachment to remove condensate. Condensate pan shall have internal trap.

E. Motor: Motors shall be open drip-proof, permanently lubricated ball bearing with inherent overload protection. Fan motors shall be 3-speed.

F. Controls:

1. Controls shall consist of a microprocessor-based control system which shall control space temperature, determine optimum fan speed, and run self diagnostics. The temperature control range shall be from 62 deg F to 84 deg F.
2. User interface with the unit shall be accomplished through the standard wireless remote control or an optional wired controller or Zone Manager. The unit shall have the following functions as a minimum:

    a. An automatic restart after power failure at the same operating conditions as at failure.
    b. A timer function to provide a minimum 24-hour timer cycle for system Auto Start/Stop.
    c. Temperature-sensing controls shall sense return air temperature.
    d. Indoor coil freeze protection.
    e. Automatic air sweep control to provide on or off activation of air sweep louvers.
    f. Fan-only operation to provide room air circulation when no cooling is required.
    g. Fan speed control shall be user-selectable: high, medium, low, or microprocessor controlled automatic operation during all operating modes.

G. Filters: Unit shall have filter track with factory-supplied cleanable filters.

H. Refrigerant Lines: All units should have refrigerant lines that can be oriented to connect from the left, right or back of the unit. Both refrigerant lines need to be insulated.

2.3 CONDENSING UNIT

A. Air-Cooled Condensing Unit (Outdoor Unit):

1. System Description:

a. Outdoor-mounted, air-cooled, split-system air conditioning unit suitable for ground or rooftop installation. Unit shall consist of a scroll compressor, and air-cooled coil, propeller-type blow-thru condenser fan, accumulator, full refrigerant charge, and control box and provide with ECM or separate permanent split capacitor motor.
b. Unit shall discharge supply air HORIZONTALLY as shown on contract drawings.
c. Unit shall be used in a condensing unit circuit to match up to a fan coil unit.

2. Quality Assurance:

a. Unit shall be rated in accordance with the latest edition of ARI Standard 210, and be certified for capacity, efficiency, and listed in the latest ARI directory.
b. Unit construction shall comply with latest edition of ANSI/ASHRAE and with NEC.
c. Unit shall be constructed in accordance with UL standards and carry the UL label of approval.
d. Unit cabinet shall be capable of withstanding Federal Test Method Standard No. 141 (Method 6061) 500-hr salt spray test.
e. Air-cooled condenser coils shall be leak tested at 150 psig and pressure tested at 300 psig.

3. Equipment:

a. Factory-assembled, single-piece air-cooled condensing unit. Contained within the unit enclosure shall be all factory wiring, piping, controls, compressor, refrigerant charge (R410A), and special features required prior to field start-up.
b. Unit cabinet shall be constructed of galvanized steel, bonderized, and coated with powder coat paint.
c. Condenser fan shall be direct-drive propeller type, discharging air horizontally. Condenser fan motors shall be totally enclosed, 1-phase type with class B insulation and permanently lubricated bearings. Shafts shall be corrosion resistant and fan blades shall be statically and dynamical balanced.
d. Condenser fan openings shall be equipped with PVC-coated steel wire safety guards.
e. Compressor will be hermetically sealed and mounted on rubber vibration isolators.
f. Condenser coil shall be air cooled and constructed of aluminum fins mechanically bonded to copper tubes, cleaned, dehydrated, and sealed.
g. Refrigeration circuit components shall include liquid line shutoff valve with sweat connections, suction line shutoff valves with sweat connections, system charge of refrigerant R410A, compressor oil, accumulator, bi-flow filter drier and pressure relief.

2.4 CONTROLS

A. Thermostat: Remote space thermostat with single stage cooling. Furnish system selector switch off-cool.

PART 3 - EXECUTION

3.1 EXAMINATION

A. Section 01 31 00 – Project Management and Coordination: Verification of existing conditions before starting work.

B. Verify concrete pad for condensing unit is ready for unit installation.

3.2 INSTALLATION - AIR HANDLING UNIT (FAN COIL UNIT)

A. Install air handling units as recommended by manufacturer on vibration isolators.

B. Refer to Section 23 33 00.

C. Install condensate piping with trap and route from drain pan to condensate drainage system. Refer to Section 23 21 13.

D. Install components furnished loose for field mounting.

E. Install connection to electrical power wiring in accordance with Section 26 05 03.

3.3 INSTALLATION - CONDENSING UNIT

A. Install condensing units on vibration isolators.

B. Install units on equipment platforms. Refer to Section 03 30 00.

C. Install refrigerant piping from unit to condensing unit. Install refrigerant specialties furnished with unit.

D. Evacuate refrigerant piping and install initial charge of refrigerant.

E. Install electrical devices furnished loose for field mounting.

F. Install control wiring between air handling unit, condensing unit, and field installed accessories.

G. Install connection to electrical power wiring in accordance with Section 26 05 03.

3.4 MANUFACTURER'S FIELD SERVICES

A. Section 01 43 00 - Quality Assurance: Requirements for manufacturer’s field services.

B. Furnish initial start-up and shutdown during first year of operation, including routine servicing and checkout.

3.5 CLEANING

A. Section 01 73 00 – Execution Requirements and Section 01 77 00 – Closeout Requirements: Requirements for cleaning.

B. Vacuum clean coils and inside of unit cabinet.

C. Install new throwaway filters in units at Substantial Completion.

3.6 DEMONSTRATION

A. Section 01 73 00 – Execution Requirements and Section 01 77 00 – Closeout Requirements: Requirements for demonstration and training.

B. Demonstrate air handling unit operation and maintenance.

C. Demonstrate starting, maintenance, and operation of condensing unit including low ambient temperature operation.

D. Furnish services of manufacturer's technical representative for one 4-hour day to instruct Owner's personnel in operation and maintenance of units. Schedule training with Owner, provide at least 7 days notice to Architect/Engineer of training date.

3.7 PROTECTION OF FINISHED WORK

A. Section 01 73 00 – Execution Requirements and Section 01 77 00 – Closeout Requirements: Requirements for protecting finished Work.

B. Do not operate air handling units until ductwork is clean, filters are in place, bearings lubricated, and fan has been test run under observation.

END OF SECTION

SECTION 26 05 00

ELECTRICAL GENERAL PROVISIONS

PART 1 - GENERAL

1.1 SCOPE

A. Work Included: All labor, materials, appliances, tools, equipment, facilities, transportation, and services necessary for and incidental to performing all operations in connection with furnishing, delivery, and installation of the work of this Section, complete, as shown on the Drawings and/or specified herein. Work includes, but is not necessarily limited to, the following:

1. Examine all other Sections for work related to those other Contract Document Sections and required to be included as work under this Section and this Division.

2. Electrical General Provisions and Requirements for electrical work.

3. Division-1; General Requirements; General Conditions.

B. Organization of the Specifications into Divisions, Sections and Articles, and arrangement of Drawings shall not control the Contractor in dividing the Contract Work among Sub-Contractors or in establishing the extent of work to be performed by any trade.

1.2 GENERAL SUMMARY OF ELECTRICAL WORK

A. The Specifications and Drawings are intended to cover a complete installation of systems. The omission of expressed reference to any item of labor or material for the proper execution of the work in accordance with present practice of the trade shall not relieve the Contractor from providing such additional labor and materials.

1. The Contract Document terms “Provide”, “Provided”, “Providing”, are each defined to mean individually and collectively: Contractor shall furnish, and Contractor shall install, and Contractor shall connect.

B. Refer to the Drawings and Shop Drawings of other trades for additional details, which affect the proper installation of this work. Diagrams and symbols showing electrical connections are diagrammatic only. Wiring diagrams do not necessarily show the exact physical arrangement of the equipment.

C. Before submitting a bid, Become familiar with all features of the Building Drawings and Site Drawings, which may affect the execution of the work. No extra payment will be allowed for failure to obtain this information.

D. If there are omissions or conflicts between the Drawings and Specifications, clarify these points with the Owner’s Representative before submitting bid and before commencing work.

E. Provide work and material in conformance with the Manufacturer's published recommendations for respective equipment and systems.

1.3 LOCATIONS OF EQUIPMENT

A. The Drawings indicate diagrammatically the desired locations or arrangements of conduit runs, outlets, equipment, etc., and are to be followed as closely as possible. Proper judgment shall be exercised in executing the work to secure the best possible installation in the available space and to overcome local difficulties due to space limitations or interference of structure conditions encountered.

B. Where outlets are placed on a wall, locate symmetrically with respect to each other, furniture, cabinets, and other features or finishes on the wall.

C. In the event changes in the indicated locations or arrangements are necessary, due to developed conditions in the building construction or rearrangement of furnishings or equipment, such changes shall be made without cost to the Contract, providing the change is ordered before the conduit runs, etc., and work directly connected to same is installed and no extra materials are required.

D. Lighting fixtures in mechanical spaces are shown in their approximate location only. Do not install light outlets or fixtures until mechanical piping and ductwork is installed; then installs lights in a location to provide best lighting.

E. Coordinate and cooperate in every way with other trades to avoid interference and assure a satisfactory job.

F. The location of the existing utilities, building, equipment, and conduit shown on the Drawings is approximate. Verify exact locations and routing of existing systems during pre-construction.

1. Pothole all trench routes prior to digging the trench. Pothole at least 100 feet ahead of the actual trenching to allow space to alter the new conduit routing to accommodate existing conditions.

2. In-buildings employ raceway/circuit tracers, x-ray visual detection, RF/ ultrasound, electromagnetic circuit detection to avoid damaging existing hidden conditions.

3. Repair/replace, without additional cost to the Contract, and to the satisfaction of the Owner any existing work damaged that was identified in the Record Drawings provided; Identified by the Owner's Representative; Identified by In-Building Investigation; Identified by the Underground Detection Services performed; or any existing work damaged as a result of failure to comply with all the Referenced Requirements.

G. Underground Detection Services Existing Utility Structures

1. Detection/location services shall be provided utilizing the latest detection equipment available. Services shall be performed by a company regularly engaged in the business of existing Underground Utility Structure Detection for the past 5-years.

2. Prior to excavation and prior to directional boring the following work shall be performed:

    a. Contractor to mark excavation, trenching and directional boring locations and indicate width and depth.
    b. Locate, by way of vertical and horizontal control dimensions, existing subgrade petroleum product pipes, process piping, conduits, sewer, water, gas, storm drain, electrical, telephone, and irrigation lines in the affected areas of Contract construction work.
    c. Arrange and meet with the Owner's Representative to review existing underground conditions.
    d. The proposed location and route of each excavation shall be continuously surveyed along the entire excavation path using Ground-Penetrating Radar (GPR) operating from the surface grade. The GPR shall detect and map existing underground metal and non-metal, both private and public utility lines, pipes, conduits, conductors, etc. The GPR shall identify the horizontal and vertical location of existing underground conditions located at a depth of up to 3-meters below finish grade and located with a vertical and horizontal accuracy within ±12-inches of actual condition. The Contractor shall add this information to the existing Conditions Site Plan.

3. Exercise extreme caution in directional boring, excavating and trenching on this site to avoid existing underground utilities and structures, and to prevent hazard to Personnel and/or damage to existing underground utilities or structures. The Contract Documents, Drawings and Specifications do not include necessary components for construction safety, which is the responsibility of the Contractor.

4. The Contractor shall contact Common Ground Alliance (CGA) telephone #811 “Know What’s Below-Call Before You Dig” and Underground Service Alert (USA), not less than 72-hours prior to excavation. Contractor shall not excavate until verification has been received from CGA and USA that existing underground utilities serving the site have been located, identified, and marked.

H. The locations of existing in-building or underground utilities, where shown on Drawings, are shown diagrammatically and have not been independently verified by the Owner, the Owner’s Representative, Architect/Engineer. The Owner, Owner’s Representative, and the Owner’s Architect/Engineer are not responsible for the location of existing utilities or structures, whether or not shown or detailed and installed under this or any other Contracts. The Contractor shall identify each existing utility line prior to cutting on excavation and mark the locations on the building’s surfaces and ground surfaces of each existing circuit and utility line.

1.4 HVAC-AIR CONDITIONING, HEATING, PLUMBING EQUIPMENT WIRING

Provide electrical work, materials, and control components required for proper operation of the air conditioning, heating and plumbing systems as indicated on the Electrical, Mechanical, and Plumbing Contract Documents and specified herein.

1.5 ELECTRICAL POWER SERVICE

A. Electrical power service and metering facilities shall conform to the Requirements of the serving Utility Companies. Contractor shall verify Service Locations and

Requirements and shall pay all costs levied by the serving Utility Companies for rendering utility services to the Contract without additional cost to the Owner. Service information will be furnished by the serving utilities.

B. Conform to All Requirements of the serving Utility Company. Location of transformer pad and or manholes and pull boxes and routing of service conduits indicated on the Drawings are approximate and shall be verified with the serving Utility Company prior to installation. Installation of service shall not begin until approved Drawings have been received from the serving Utility Company.

C. Within 30-calendar days of receipt of notice that the Contract award has been made, the Contractor shall notify the New Business Departments of the District Office of the serving Utility Company concerning the project Contract and shall provide information as to the total Lighting, and Power Requirements of the Contract. The Contractor shall furnish at the same time information as to the estimated completion date of job or the date when the respective Utility Company circuits, will be ready for installation, energizing and activation of the respective services.

D. Contractor shall submit Electrical Utility Metering and Electrical Service Entrance Equipment Shop Drawings to the Electric Utility Company supplying the project for review and approval by the serving Utility Company. The submittal and acceptance by the Utility shall occur prior to submitting of Shop Drawings to the Owner's Representative or A/E for review. Copies of the serving Electrical Utility approval of the service entrance equipment shall be included in the Shop Drawings submittals to the Owner's Representative and A/E.

1.6 PERMITS

Take out and pay for all required permits, inspections, and examinations without additional cost to the Owner.

1.7 QUALITY ASSURANCE

A. Work and Materials shall be in full accordance with the latest recommendations, Rules, and Regulations. The publications shall be included in the Contract Documents as Contract Requirements. If a conflict occurs between the following publications and any other part of the Contract Documents, the Requirements describing the more restrictive provisions shall become the applicable Contract Definition and Requirement:

1. American National Standards Institute – ANSI.

2. California Code of Regulations Title 24.

3. California Part 3 "California Electrical Code" CEC, Title 24 and Title 8 "Division of Industrial Safety".

4. California Building Code - CBC.

5. California Fire Code – CFC

6. The National Electrical Code – NEC/NFPA 70.

7. The Life Safety Code – NFPA 101.

8. Illuminating engineering Society of North America. IES and IESNA.

9. International Building Code – IBC.

10. National Fire Protection Agency - NFPA.

11. National Fire Alarm Code – NFAC/NFPA 72.

12. Underwriter's Laboratory – UL.

13. Other applicable State and Local Government Agencies Laws and Regulations.

14. Electrical Installation Standards National Electrical Contractors Association (NECA) and National Electrical Installation Standards (NEIS):

    a. NECA/NEIS-1: Standard of Practices for Good Workmanship in Electrical Construction.
    b. NECA/NEIS-90: Standard for Commissioning Building Electrical Systems
    c. NECA/NEIS-101: Standard for Installing Steel Conduit (Rigid, IMC, EMT) (ANSI)
    d. NECA/AA-104: Recommended Practice for Installing Aluminum Building Wire and Cable (ANSI)
    e. NECA -111: Standard for Installing Nonmetallic Raceways (RNC, ENT, LFNC) (ANSI)
    f. NECA/NEIS-169: Standard for Installing and Maintaining Arc-Fault Circuit Interrupters.
    g. NECA/NEIS-230: Standard for Installing and Maintaining Electric Motors and Motor Controllers
    h. NECA/NEIS-305: Standard for Fire Alarm System Job Practice
    i. NECA/NEIS–331: Standards for Installing Building and Service Entrance Grounding
    j. NECA/NEIS-400: Standard for Installing and Maintaining Switchboards
    k. NECA/NEIS-407: Recommended Practice for Installing Panelboards
    l. NECA/NEIS-409: Standard for Installing and Maintaining Dry-Type Transformers
    m. NECA/NEIS-413: Standard for Installing and Maintaining Electrical Vehicle Supply Equipment
    n. NECA/NEIS-420: Standard for Fuse Applications.
    o. NEIS/NECA and IESNA-500: Standard for Installing Indoor Lighting Systems
    p. NEIS/NECA and IESNA-501: Standard for Installing Exterior Lighting Systems
    q. NECA/NEMA–605: Recommended Practice for Installing Underground Nonmetallic Utility Duct
    r. NECA/NEIS and BICSI–607: Standard for Telecommunications Bonding and Grounding, Planning, and Installation Methods
    s. NECA/NEIS-700: Standard for Installing Overcurrent Protection to Achieve Selective Coordination

t. NECA/NEMA–701: Standard for Energy Management, Demand Response and Energy Solutions.

B. All material and equipment shall be new and shall be delivered to the site in unbroken packages. All material and equipment shall be listed and labeled by Underwriters Laboratories or other recognized Testing Laboratories, where such listings are available. Comply with all Installation Requirements and restrictions pertaining to such listings.

C. Work and material shown on the Drawings and in the Specifications are new and included in the Contract unless specifically indicated as existing or N.I.C. (not in Contract).

D. Keep a copy of all applicable Codes and Standards available at the job site at all times for reference while performing work under this Contract. Nothing in Plans or Specifications shall be construed to permit work not conforming to the most stringent of Building Codes.

E. Where a conflict or variation occurs between applicable Codes, Standards and/or the Contract Documents, the provisions of the most restrictive provision shall become the Requirement of the Contract Documents.

1.8 SUBMITTALS (ADDITIONAL REQUIREMENTS)

A. General

1. Review of Contractor's submittals is for general conformance with the design concept of the Project and general compliance with the information given in the Contract Documents. Any action shown is subject to the Requirements of the Plans and Specifications. Contractor is responsible for quantities; dimensions which shall be confirmed and correlated at the job site; fabrication processes and techniques of construction; coordination of work with that of all other trades and satisfactory performance of their work.

2. The Contractor shall review each submittal in detail for compliance with the Requirements of the Contract Documents prior to submittal. The Contractor shall “Stamp" and sign each item of the submittal with a statement "CERTIFYING THE SUBMITTAL HAS BEEN REVIEWED BY THE CONTRACTOR AND COMPLIES WITH ALL THE REQUIREMENTS OF THE CONTRACT DOCUMENTS". The Contractor shall clearly and specifically identify each individual proposed substitution, substitution of equal or proposed deviation from the Requirements of the Contract Documents with a statement "THIS ITEM IS A SUBSTITUTION".

   The burden of research, preparation of calculations and the furnishing of adequate and complete Shop Drawings information to demonstrate the suitability of Contractor’s proposed substitutions and suitability of proposed deviations from the Contract Documents is the responsibility of the Contractor.

3. Departure from the submittal procedure will result in resubmittals and delays. Failure of the Contractor to comply with the Submittal Requirements shall render void any acceptance or any approval of the proposed variation. The Contractor

shall then be required to provide the equipment or method without variation from the Contract Documents and without additional cost to the Contract.

4. The Contractor at no additional cost or delays to the Contract shall remove any work, material and correct any deficiencies resulting from deviations from the Requirements of the Contract Documents not approved in advance by the Owner prior to commencement of work.

5. Shop Drawings submitted by the Contractor, which are not specifically required for submittal by the Contract Documents, or Contractor Shop Drawings previously reviewed and resubmitted without a written resubmittal request to the Contractor, will not be reviewed, considered, or commented on. The respective Shop Drawing submittal/resubmittal will not be returned to the Contractor and will be destroyed without comment or response to the Contractor. The respective submittal shall be considered null and void as being not in compliance with the Requirements of the Contract Documents.

6. Refer to Division-1 for Additional Requirements.

B. Material Lists and Shop Drawings

1. Submit material list and Equipment Manufacturers for review within 35 days of Award of Contract. Give name of Manufacturer and where applicable, brand name, type and/or catalog number of each item. Listing of more than one Manufacturer for any one item of equipment, or listing items "as specified", without both make and model or type designation, is not acceptable. Shop Drawings shall not be submitted before review completion of Manufacturers list. The right is reserved to require submission of samples of any material whether or not particularly mentioned herein.

2. After completion of review of the Material and Equipment Manufacturers list, submit Shop Drawings for review. Shop Drawings shall be submitted in completed bound groups of materials (i.e., all lighting fixtures or all switchgear, etc.). The Contractor shall verify dimensions of equipment and be satisfied as to fit and that they comply with all Code Requirements relating to clear working space about electrical equipment prior to submitting Shop Drawings for review. Submittals, which are intended to be reviewed as substitution or departure from the Contract Documents, must be specifically noted as such. The Requirements of the Contract Documents shall prevail regardless of the acceptance of the submittal.

3. Shop Drawings shall include catalog data sheets, instruction manuals, Dimensioned Plans, elevations, details, wiring diagrams, and descriptive literature of component parts where applicable. Structural calculations and mounting details, signed by a Structural Engineer registered in good standing by the State of California, shall be submitted for all equipment weighing over 400-pounds, and shall be in compliance with Title 21 and Title 24 of the California Code of Regulations (CCR).

4. Each Shop Drawing item shall be identified with the Specification Section, applicable paragraph number(s), lighting fixture/equipment types and Drawing

sheet numbers; the specific Shop Drawing is intended to represent. Shop Drawing pages/sheets submittals shall be sequentially numbered with unique alphanumeric numbering system to facilitate correspondence referencing identification of individual sheets.

5. The time required to review and comment on the Contractor's submittals will not be less than 14 calendar days, or more than 21-calendar days after receipt of the submittals at the office of FBA Engineering. The review of Contractor submittals and return to Contractor of submittals with review comments will occur in a timely manner conditioned upon the Contractor complying with all the following:

    a. The submittals contain complete and accurate information, complying with the Requirements of the Contract Documents.
    b. Contractor's submittals are each marked with Contractor's approval "Stamp", and with Contractor signatures.
    c. The submittals are received in accordance with a written, Shop Drawing submittal schedule for each submittal. The Contractor distributes the schedule not less than 35-calendar days in advance of the Shop Drawing Submittals, and the schedule identifies the calendar dates, the Contractor will deliver the various submittals for review.

6. Shop Drawings shall include the Manufacturers' projected days for shipment from the factory of completed equipment, after the Contractor releases the equipment for production. It shall be the responsibility of the Contractor to ensure that all material and equipment is ordered in time to provide an orderly progression of the work. The Contractor shall notify the Owner's Representative of any changes in delivery, which would affect the project completion date.

7. Submittal Identification

    a. Each submittal shall be dated: with submittal transmission date; sequentially numbered and titled with submittal contents identification and applicable Specification/Drawing references *(i.e., Submittal dated: 05/12/19 Submittal #4 Contents: Branch Circuit Panelboards Sheet #E5.1 and Transformers Specification Section 260500 Paragraph 2.11, etc.)*.
    b. Each resubmittal shall be dated: with original submittal date and resubmittal transmission dates; sequentially numbered with original submittal number and sequential resubmittal revision number and titled with submittal contents identification and applicable Specifications/Drawing references *(i.e., Original Submittal Date: 05/12/19 Resubmittal Date: 10/09/19 Original Submittal #4 Resubmittal Revision R2 Contents: Transformer Resubmittal Specification Section - 260500 Paragraph 2.11, etc.).*
    c. Contractor shall provide a written response narrative with each resubmittal. Describe each response action, resubmittal addition, change and deletion. Correspond to each response to A/E specific review comment.

C. The Contractor shall be responsible for incidental, direct and indirect costs resulting from the Contractor's substitution of; or changes to; the specified Contract Materials and Work.

D. The Contractor shall pay, upon request by the Owner's Representative, a fee for the Owner's Representative time involved in the review of substitution submittals and design changes resulting from the Contractor's requested substitutions. The fee shall be not less than $135.00 per hour but, in no case, less than stated in Division-1, whichever is greater.

E. Maintenance and Operating Manuals

1. The Contractor shall furnish three copies of type-written maintenance and operating manuals and electronic digital copy for all electrical equipment, fire alarm equipment, sound system equipment, etc., to the Owner.

2. Instruct Owner's Personnel in correct operation of all equipment at completion of Project.

3. Maintenance and operating manuals shall be bound in three ring, hard-cover, plastic binders with table of contents. Manuals shall be delivered to the Owner's Representative, with an itemized receipt.

F. Portable or Detachable Parts: The Contractor shall retain in his possession and shall be responsible for all port-able and detachable parts or portions of the installation such as fuses, keys, locks, adapters, locking clips, and inserts until final completion of Contract work. These parts shall then be delivered to the Owner's Representative with an itemized receipt.

G. Record Drawings (Additional Requirements)

1. Provide and maintain in good order a complete set of Electrical Contract "Record" prints. Changes to the Contract to be clearly recorded on this set of prints. At the end of the Project, transfer all changes to one set of transparencies to be delivered unfolded to the Owner's Representative.

2. The actual location and elevation of all buried lines, boxes, monuments, vaults, stub-outs and other provisions for future connections shall be referenced to the building lines or other clearly established base lines and to approved benchmarks. If any necessary dimensions are omitted from the Record Drawings, the Contractor shall, at the Contractor's own expense, do all excavation required to expose the buried work and to establish the correct locations.

3. The Contractor shall keep the "Record" prints up to date and current with all work performed.

4. Refer to Division-1 for Additional Requirements.

1.9 CLEANING EQUIPMENT, MATERIALS, PREMISES

All Parts of the Equipment shall be thoroughly cleaned of dirt, rust, cement, plaster, etc., and all cracks and corners scraped out clean. Surfaces to be painted shall be carefully cleaned of grease and oil spots and left smooth, clean and in proper condition to receive paint finish.

1.10 JOB CONDITIONS - PROTECTION

Protect all work, materials and equipment from damage from any cause whatever and provide adequate and proper storage facilities during the progress of the work. Provide for the safety and good condition of all the work until final acceptance of the work by the Owner and replace all damaged or defective work, materials and equipment before requesting final acceptance.

1.11 EXCAVATION, CUTTING, BACKFILL AND PATCHING ADDITIONAL REQUIREMENTS

A. General

1. Perform excavation, cutting, backfill, core drilling, directional boring, and patching of the construction work required for the proper installation of the electrical work.

2. Patching shall be of the same material, thickness, workmanship, and finish as existing and accurately match-surrounding work to the satisfaction of the Owner's Representative.

3. Prior to penetrating, coring, drilling or cutting existing building elements, concrete and/or masonry, provide imaging equipment examinations of each specific location. The imaging process shall identify existing internal embedded components and locations, including structural elements/ anchors, conduit, and piping that are present. Do not penetrate or damage the existing internal embedded elements. Imaging shall employ one of the following, with GPR methodology preferred:

   a. Non-invasive imaging employing high frequency, Ground Penetrating Radar (GPR), single side echo reflection technology.
   b. Non-invasive imaging employing x-ray radiography, through-and-through imaging technology.

B. Excavation Temporary Cover

1. Excavations for Contract Work occurring in streets, vehicular drive areas, parking lots, sidewalks; any paved surface; or any area accessible to the public; provide temporary steel plating and shoring support for the plates, to completely cover the excavations under one or more of the following conditions:

   a. Excavation shall not remain "open" for more than 4-calendar days; provide temporary plating.
   b. Excavation shall not be "open" over weekends (Saturday, Sunday) or Holidays; provide temporary plating.

2. The temporary plating shall be a minimum of 0.75-inch thickness steel, but in no case shall the thickness be less than required to support AASHO-H20 traffic loading.

3. Provide a minimum of two [one] 100% open lane(s) (12 feet lane width) for vehicular traffic at all times during construction, for vehicle access to all areas.

1.12 IDENTIFICATION

A. Equipment Nameplates

1. Panelboards, terminal cabinets, circuit breakers, disconnect switches, starters, relays, time switches, contactors, push-button control stations, and other apparatus used for the operation or control of feeders, circuits, appliances, or equipment shall be properly identified by means of descriptive nameplates or tags permanently attached to the apparatus and wiring.

2. Provide nameplate label on electrical service entrance equipment describing available short circuit information and Arc-Flash information calculated by the Contractor, including:

   a. Calculation date, month-day-year.
   b. Calculate maximum available short circuit fault current and Arc-Flash intensities.
   c. Description of parameters and changes affecting the Requirements for recalculation of the fault current information and Arc-Flash information.

3. Electrical equipment including switchgear, switchboards, electric panels and control panels, motor control centers, combination motor starters, transformers, disconnects, etc., shall each be labeled by the Manufacturer with “Electric-Arc-Flash” warning signs. The signs shall explain a hazard to personnel may exist if the equipment is worked on while energized or operated by personnel while energized. The sign shall instruct personnel to wear the correct Protective Equipment/clothing (PPE) when working “Live” or operating “Live” electrical equipment and circuits.

4. Nameplates shall be engraved laminated phenolic, rated UV-resistant for wet locations and outdoor locations, fade resistant. Shop Drawings with dimensions and format shall be submitted before installation. Attachment to equipment shall be with escutcheon pins, rivets, self-tapping screws or machine screws. Self-adhering or adhesive backed nameplates shall not be used.

5. Provide black-on-white laminated plastic nameplates for normal power and white-on-red nameplates for emergency power, engraved in minimum ¼-inch high letters sized as required, to identify each piece of electrical distribution and control equipment and associated sections, compartments, and components.

   a. Switchboards:

      1) Equipment designations as shown on Drawings.
      2) Identify ampere rating.
      3) Identify voltage and phase.
      4) Identify power source and circuit number. Include location when not within sight of equipment.
      5) Use identification nameplate to identify load(s) served for each branch device.

b. Motor Control Centers:

1) Equipment designations as shown on Drawings.
2) Identify ampere rating.
3) Identify voltage and phase.
4) Use identification nameplate to identify main overcurrent protective device.
5) Use identification nameplate to identify load(s) served for each branch device.

c. Panelboards:

1) Equipment designations as shown on Drawings.
2) Identify ampere rating.
3) Identify voltage and phase.
4) Identify power source and circuit number. Include location when not within sight of equipment.
5) Identify main overcurrent protective device. Use identification label for panelboards with a door. For power distribution panelboards without a door, use identification nameplate.
6) Use typewritten circuit directory to identify load(s) served for panelboards with a door.
7) For power panelboards without a door, use identification nameplate to identify load(s) served for each branch device.

d. Transformers:

1) Equipment designations as shown on Drawings.
2) Identify kVA rating.
3) Identify voltage and phase for primary and secondary.

e. Enclosed switches, circuit breakers, and motor controllers:

1) Equipment designations as shown on Drawings.
2) Identify voltage and phase.
3) Identify power source and circuit number. Include location when not within sight of equipment.

f. Time Switches:

1) Equipment designations as shown on Drawings.
2) Identify load(s) served and associated circuits controlled. Include location.

g. Enclosed Contactors:

1) Equipment designations as shown on Drawings.
2) Identify ampere rating.
3) Identify voltage and phase.
4) Identify configuration, e.g., E.O.E.H. (electrically operated, electrically held) or E.O.M.H. (electrically operated, mechanically held).

h. Transfer Switches:

1) Identify voltage and phase.
2) Identify power source and circuit number for both normal power source and standby power source. Include location when not within sight of equipment.
3) Identify short circuit current rating based on the specific overcurrent protective device type and settings protecting the transfer switch.

2. Service Equipment:

a. Use identification nameplate to identify each service dis-connecting means.
b. For buildings or structures supplied by more than one service, or any combination of branch circuits, feeders, and services, use identification nameplate or means of identification acceptable to authority having jurisdiction at each service disconnecting means to identify all other services, feeders, and branch circuits supplying that building or structure. Verify format and descriptions with authority having jurisdiction.

3. Emergency System Equipment:

a. Use identification nameplate or voltage marker to identify emergency system equipment in accordance with NFPA 70.
b. Use identification nameplate at each piece of service equipment to identify type and location of on-site emergency power sources.

B. Plates: All cover and device plates shall be furnished with engraved or etched designations under any one of the following conditions (minimum character size not less than 0.188 inch. Engraving shall indicate circuits and equipment controlled or connected):

1. More than two devices under a common coverplate.

2. Lock switches.

3. Pilot switches.

4. Switches in locations from which the equipment or circuits controlled cannot be readily seen.

5. Manual motor starting switches.

6. Where so indicated on the Drawings.

7. As required on all control circuit switches, such as heater controls, motor controls, etc.

8. Receptacles other than standard 15-amp 120-volt duplex receptacles; shall indicate circuit voltage, ampere, phase and source circuit number.

9. Where outlets or switches are connected to emergency power circuit; provide panelboard and circuit number engraved on plate.

10. Low voltage and signal system outlets.

C. For equipment and access doors or gates to equipment containing or operating on circuits of more than 100 volts AC or DC nominal. Provide red-on-white laminated warning signs engraved in ½-inch high letters to read: "DANGER - 480 (or applicable voltage) VOLTS KEEP OUT AUTHORIZED PERSONNEL ONLY".

D. Conduit Identification.

1. Adhesive Marking Labels for Raceway and Metal Clad Cable: Preprinted flexible, self-adhesive labels with legend indicating voltage and service (Emergency, Power, Lighting, Air-Conditioning, Control, Voice and data Communications, Fire Alarm and Detection, Public Address (Paging) Electronic Security). Manufacturer: Brady, Ideal, Waytech.

2. Label size as follows:

a. Raceways 1-inch and Smaller: ½-inch high by minimum 2¼-inch long.
b. Raceways Larger than 1-inch: 1⅛-inch high by minimum 4¼-inch long.

E. Wire and Cable Identification

1. Provide identification on individual wire and cable including signal systems, fire alarm, electrical power systems (each individual phase, neutral and ground), empty conduit pull ropes, and controls circuit.

2. Permanent identification shall be provided at each termination location, splice location, pullbox, junction box and equipment enclosure.

a. Individual wire and cable larger than #6AWG or 0.25-inch diameter, shall be provided with polypropylene identification tag holders, with yellow polypropylene tags interchangeable black alphanumeric characters, character height 0.25 inch. Attach identification tags with plastic “tie” wraps, minimum of two for each tag. As manufactured by Almetek Industries- “EZTAG” Series; or TECH Products - “EVERLAST” Series.
b. Individual wire and cable #6AWG and smaller or smaller than 0.25-inch diameter, shall be provided with water and oil resistant, flexible, self-laminating pressure sensitive machine embossed plastic tags that wrap a minimum of 360 degrees around the wire/cable diameter. The entire tag shall then be covered with a clear flexible waterproof plastic cover wrapped a minimum of 540 degrees around the wire/cable diameter and completely covering the identification. As manufactured by: Brady Identification; or 3M; or Panduit.
c. Each identification tag location shall indicate the following information: circuit number, circuit phase, source termination and destination termination equipment name (or outlet number as applicable).

3. Install permanent identification after installation/pulling of wire/cable is complete, to prevent loss or damage to the identification.

F. Cardholders and Cards shall be provided for circuit identification in panelboards. Cardholders shall consist of a metal frame retaining a clear plastic cover permanently attached to the inside of panel door. List of circuits shall be type-written on card. Circuit description shall include name or number of circuits, area, and connected load.

G. Junction and Pullboxes shall have covers stenciled with box number when shown on the Drawings, or circuit numbers according to panel schedule. Data shall be lettered in a conspicuous manner with a color contrasting to finish.

1.13 TESTING

A. The Contractor shall obtain an independent Testing Laboratory, provide all instrumentation and perform tests on the electrical system and equipment as hereinafter described and further directed by the Owner's Representative. The test shall be performed after the completion of all electrical systems included in the Contract Scope of Work. All tests shall be recorded and documented and submitted to the Owner's Representative for review, six copies.

1. All equipment and personnel required for set-up and testing shall be provided by the Contractor.

2. Return all equipment and circuits to corrected operational condition when test-and-pass is successfully completed.

B. Test for Phase to Ground and Neutral Condition:

1. Open main service disconnects.

2. Isolate the system neutral from ground by removing the neutral disconnects link located in the service switchboard.

3. Close all submain disconnects.

4. Close all branch feeder circuit breakers.

5. Turn all switches to "on" position, unplug all portable equipment from outlet receptacles.

6. Measure the resistance of each non-energized phase-to-phase, phase-to-ground and phase-to-neutral. A properly calibrated "megger" type test instrument shall be used. The test voltage shall be a nominal 500 volts.

7. Record all readings after one minute duration and document into a complete report.

8. Isolating Grounds and Phases: If low resistance phase and/or ground neutral connections are found in the system, they shall be isolated and located by testing each circuit individually as outlined above. Make proper corrections to restore the resistance values to an acceptable value.

C. Method of obtaining ground resistance shall be in accordance with the latest edition of the James G. Biddle (Plymouth Meeting, Pennsylvania) manual published on this subject.

1. Perform "fall-of-potential" three-point tests on the main grounding electrode of system per IEEE Standard No. 81, Section 8.2.1.5. when suitable locations for test rods are not available, a low resistance dead earth or reference ground shall be utilized.

2. Perform the two-point method test per IEEE Standard No. 81, Section 8.2.1.1, to determine the ground resistance between the main grounding system and all major electrical equipment frames, system neutral, and/or derived neutral points.

D. The testing, calibrating and setting of all ground and ground fault equipment, circuit breakers, circuit device protection relays, and meters adjustable settings shall be by an independent Testing Laboratory. Set as recommended by the respective Manufacturer and coordination and arc-flash studies, to be coordinated with other protection devices within the electrical design. Bound and tabulated copies of the test and settings shall be sent to the Owner's Representative.

E. Ampere and Voltage Measurements

1. Measure and record ampere and line voltage measurements under full load on all panel feeders, switchboard, and switchgear feeders, motor control centers and motor circuits provided in the Contract. Record measurements at the equipment tested and submit to the Owner's Representative for review.

2. Ampere and voltage measurements shall be:

a. Phase A-B, A-C, and B-C.
b. Phase A-Neutral, B-Neutral and C-Neutral.

3. The ampere and voltage readings shall be not less than 20-minutes duration for each test. Record and submit the measured minimum, maximum and 20-minute average for each ampere and voltage value and test location. Voltage and ampere measurements shall occur at the connected load end of each respective feeder, not at the source of supply end of each feeder.

4. Test equipment shall be accurate within plus or minus 1%.

5. Branch circuit devices 40-amp or less and motor loads ten horsepower or smaller are excluded from individual Ampere and Voltage Testing Requirement.

6. If, in the opinion of the Owner's Representative, the voltages and regulations are not met within acceptable limits, make arrangements with the serving utility for proper electrical service. Retest feeder line voltages, and submit to Owner's Representative for review, after the utility company has completed corrective actions. Reset "voltage taps" on transformers provided or modified as part of the Contract Work, to adjust line voltages to within acceptable values, as directed by the Owner's Representative.

F. State of California Title-24 Compliance Testing

1. Mandatory California Title-24 Building Energy Code, Part-6 acceptance testing. Shall insure those respective systems properly installed and functioning, all in conformance with Title-24.

2. Refer to Process Guide to Acceptance Testing, published by the State of California, complete the testing and documentation.

3. Perform California Title-24 Testing and Certification. Submit the completed Certification of Acceptance documentation to the AHJ and Owner's Representative.

G. Complete the following work before any electrical equipment is energized.

1. All equipment shall be permanently anchored.

2. All bus connections and conductor/wire connections shall be tightened per Manufacturer's instructions and witnessed by the Owner's Representative.

3. All ground connections shall be completed and identified. Perform and successfully complete all required megger and ground resistance tests.

4. Low voltage/signal circuits, line voltage branch circuits and feeders shall be connected, tested and identified.

5. The interiors of all electrical enclosures including busbars and wiring terminals shall be cleaned of all loose material and debris, paint, plaster, cleaners or other abrasive's overspray removed, and equipment vacuumed clean. The Owner's Representative shall observe all interiors before covers are installed.

6. All wall, ceiling, and floor work and painting shall be completed within areas containing electrical equipment prior to installation of equipment. The equipment indoor rooms and spaces shall be weathertight, and weather protected from environmental incursions.

7. All doors for line voltage and low voltage/signal electrical equipment rooms shall be provided with locks to restrict access to energized equipment.

8. Electrical spaces and rooms shall not be used as storage rooms after power is energized.

9. Outdoor electrical equipment enclosures and housings shall be weather protected.

10. The electrical system time current coordination and Arc-Flash studies shall be complete for circuit breakers, ground relays set, and circuit relay sets, fuses; set-up, tested and calibrated accordingly. Protection settings for all devices shall be completed and tested.

1.14 COMMISSIONING - CX

A. General

1. The Commissioning shall verify the electrical systems for the term of the Contract, by observation; and by calibration; and by testing. The Commissioning shall ensure the electrical systems perform interactively and correctly, according to the Contract and Operational Requirements.

2. Commissioning shall provide startup, testing and documented confirmation of the Contract constructed systems, materials and work, functions in compliance within the criteria set forth in the Contract Documents to the satisfaction of the Owner's needs. The Commissioning Scope shall encompass each system identified as requiring "Commissioning" by the Contract Documents, including but not limited to:

    a. Electrical circuits' protection, short circuit, overcurrent, ground fault devices and electrical grounding.
    b. Electrical circuits monitoring and metering.
    c. Light fixtures, lamps and ballasts.
    d. Lighting control devices, equipment and lighting control systems.
    e. Standby and emergency electric power supply equipment and systems.
    f. Motor Control Equipment.
    g. Fire alarm, equipment, devices, and fire alarm systems.
    h. Communications, low voltage and signal devices and systems.
    i. Additional systems described in the Contract Documents.

3. Commissioning process shall review all the Shop Drawing submittals, including:

    a. Controls, Operation and Maintenance Requirements.
    b. Facility performance testing compliance.
    c. Project Contract Requirements compliance.
    d. Compliance with basis for design and operational descriptions provided in the Contract.

4. Commissioning shall be the process of ensuring all the systems described in the Contract Documents comply with the Contract Document design; all systems are installed properly; all systems are functional, tested and capable of being operated and maintained to perform within the Contract Requirements and design intent.

5. Functional setup, recalibration, correcting deficiencies, retesting and the associated costs, for system(s) that fail Commissioning, shall be the responsibility of the Contractor. The Contractor shall include all Commissioning costs in the Contract Scope of Work.

6. Complete all Commissioning functions prior to the occupancy of the facility by the Owner, unless directed otherwise by the Owner's Representative.

7. Submit six copies of Commissioning Documentation to Owner's Representative.

B. Commissioning Procedures

1. Prepare a Commissioning Matrix identifying components and systems included in the Commissioning Scope; the status; actions completed and actions to be completed.

2. Verify Contractor compliance with Contract Document Requirements Manufacturer's recommendations and approved Shop Drawings.

3. Perform startup, functional tests, reports, and document results.

4. Evaluate and document the setup parameters, software, operating condition and performance of each system at the time of functional test completion. Document and record each performance parameter and condition, in the Commissioning Report.

5. Schedule testing and prepare descriptions of testing.

6. Describe measures performed to correct deficiencies.

7. Verify that instructions to Owner's Representatives, operations and maintenance manuals comply with Contract Documents.

8. Prepare warranty matrix identifying the start dates, expiration dates, routine preventative maintenance dates and the Owner’s responsibility for performing preventative maintenance and keeping logs for each maintenance function and warranty claims.

9. Confirm completion of all punch list items that have been acceptably accomplished and a list of what has not been acceptably completed.

10. Describe uncorrected deficiencies accepted by the Owner.

C. Commissioning Phasing

The Commissioning Phases of work shall include the following activities:

1. SDQ - Shop Drawing Qualification shall verify complete and correct Shop Drawings have been submitted.

2. IQ – The Installation Qualification of Contract Work shall verify systems are correctly and properly installed.

3. OQ - Verify systems interfaces and software is correctly and properly operational.

4. ITM - Verify the Contract Inspection, Testing and procedures for Maintenance are complete.

5. PQ - Performance Qualification complete the functional performance testing to validate each building system.

1.15 POWER AND FIRE ALARM OUTAGES

A. All Electrical Services (line voltage, low voltage/signal and fire alarm) in all occupied facilities of the Contract work are to remain operational during the entire Contract period. Any interruption of the electrical services for the performance of this work shall be at the convenience of the Owner and performed only after consultation with the Owner's Representative. Work involving circuit outages shall be only at such a time and of such a duration as approved in writing. Work involving circuit outages for the work required to connect new equipment and disconnect existing equipment shall be performed at the convenience of the Owner.

B. Contract Work involving outages or disruption of normal function in electrical power systems, telephone/communication systems, fire alarms, shall be performed during the following time periods. The Contract Work shall be phased to limit outages in the respective systems to the stated periods:

1. 11:30 p.m. Friday to 11:30 p.m. Sunday of the same weekend. Work shall occur on multiple weekend periods if a single weekend is not sufficient time to complete the work.

2. The Contract Work involving outages shall be phased in multiple work time units, to comply with the permitted outage limitations.

C. Work involving system outages to the building fire alarm system shall be performed only after consultation with the Owner and shall be only at such a time and of such duration as approved in writing. Contractor shall provide continuous "Fire-Watch" during fire alarm system outages and comply with AHJ "Fire-Watch" Requirements.

D. Provide overtime work; double shift work; nighttime work; Saturday, Sunday, and holiday work to meet outages schedule.

E. Provide temporary electrical power to meet the Requirements of this Article.

F. Any added costs to Contractor due to necessity of complying with this Article shall be included in the Contract Scope of Work.

G. When electrical work involving power disruptions to existing areas is initiated, the work shall proceed on a continuous basis without stopping until electric system power is restored to the affected areas.

H. Request in writing to the Owner's Representative a minimum of 3-weeks in advance, for scheduling proposed electrical systems outage.

1.16 TEMPORARY ELECTRICAL POWER

Provide temporary electrical power if work requiring power outages cannot be completed in time permitted and approved by the Owner's Representative.

1.17 ASBESTOS, POLYCHLORINATED BIPHENYL (PCB) OR HAZARDOUS WASTE:

A. It is understood and agreed that this Contract does not contemplate the handling of asbestos, PCB or any hazardous waste material. If asbestos, PCB or any hazardous

waste material is encountered, notify the Owner's Representative immediately. Do not disturb, handle or attempt to remove.

B. Lighting Fixture Demolition Hazardous Materials

1. The removal of existing lighting fixtures will generate Hazardous Material Waste Disposal Contract Documents.

a. The existing lighting fixture ballast contains PCB material.
b. The existing lighting fixture lamps contain mercury.
c. The existing lighting fixture internal wire insulation may contain asbestos.

2. Remove, handle, store, contain, dispose of and document the hazardous materials resulting from existing lighting fixtures work, as part of the Contract Requirements.

1.18 TIME/CURRENT COORDINATION, SHORT CIRCUIT, ARC-FLASH AND SERIES RATED EQUIPMENT

A. Series Rated Equipment.

1. Circuit Protective Devices identified as "Series Rated" or "Current Limiting" (i.e., SR – Series Rated; CLCB - Current Limiting Circuit Breaker; CLF - current limiting fuse, etc.) shall be series rated and tested (UL 489, UL 67, and CSA5) by the Manufacturer with all equipment and circuit protective devices installed downstream of the identified series rated or current limiting device.

2. Provide nameplates on all equipment located downstream, including the CLCB and CLF devices, to comply with CEC/NEC paragraphs 110-22 and 240-83 "CAUTION SERIES RATED SYSTEM - NEW DEVICE INSTALLATIONS AND REPLACEMENTS SHALL BE THE SAME MANUFACTURER AND MODELS".

B. Short Circuit, Coordination and Arc-Flash

1. Perform Engineering Analysis and submit engineered settings for each equipment location, fuse and circuit breaker device, showing the correct time and current settings to provide the selective coordination within the limits of the specified equipment. Shall comply with the latest application Standards of IEEE and ANSI. Provide electrical system short circuit worst case bolted-fault analysis, both 3-phase line-to-line and 1-phase line-to-ground calculations as part of the Coordination Analysis recommendations. Provide Electric Arc-Flash calculations as part of the Coordination Analysis recommendations. Obtain the necessary information including the maximum fault current from the secondary side of the utility company transformer to complete the calculations from the serving Electrical Utility Company.

2. Obtain the short-circuit current ratings (SCCR) for all equipment with control panels or controllers (elevators, HVAC, plumbing equipment, etc.). Incorporate these items into the short circuit analysis and determine that the available fault current does not exceed the SCCR of the equipment.

3. The information shall be submitted in both tabular form and on time current log-log graph paper with an engineering narrative. Written narrative describing data, assumptions, analysis of results and prioritized recommendations, six copies.

4. The goal is to minimize an unexpected but necessary electrical system outage and personnel exposure to the smallest extent possible within the fault occurrence location, using the specified Contract equipment. Shall comply with, but not limited to:

    a. IEEE-242, Recommended Practices for Protection and Coordination of Industrial and Commercial Distribution.
    b. IEEE-399, Recommended Practices for Industrial and Commercial Power System Analysis.
    c. IEEE-1584, Guide for Performing Arc-Flash Hazard Calculations Working Calculation.
    d. CEC/NEC

5. Provide permanent warning labels on each equipment location. The labels shall describe Arc-Flash, Short-Circuit and Time/Current Coordination, including safety precautions and protective clothing. Also describe actions to be taken if any circuit changes or equipment modifications occur.

6. The analysis shall be submitted with the Shop Drawing submittals for the respective equipment.

7. The Contractor shall independently contact the serving utility company to obtain the current system short circuit amps or available fault current.

8. The Contractor shall independently obtain As-Built Drawings for the existing infrastructure to establish lengths. If As-Built Drawings are no available, the Contractor shall research existing conditions and make reasonable but conservative estimates of conductor length. Where existing conductors have been re-used, the Contractor shall confirm conductor quantity, size, and conduit type.

1.19 INDEPENDENT TESTING LABORATORY

A. Testing Laboratories Definition

1. The Testing Laboratory shall meet Federal OSHA Criteria for accreditation of Nationally Recognized Testing Laboratories (NRTL) Title 29 Part 1907 and 29 CFR-1910.

2. Membership in the National Electrical Testing Association (NETA) shall also constitute acceptance of meeting said criteria, for testing of electrical systems.

1.20 EQUIPMENT SEISMIC AND WIND LOAD REQUIREMENTS (ADDITIONAL REQUIREMENTS)

A. General

1. Equipment supports and anchorages provided as part of the Contract shall be designed, constructed and installed in accordance with the Earthquake Regulations of the California Building Code (CBC), International Building Code (IBC).

2. Provide equipment anchorage details, coordinated with the equipment mounting provision, prepared, signed and "stamped" with PE registration in good standing, by a Civil or Structural Engineer Licensed as a Professional Engineer (PE) in the State of California.

3. Mounting recommendations shall be provided by the Manufacturer based upon approved shake-table tests used to verify the seismic design of that type of equipment.

4. The Equipment Manufacturer shall document the details necessary for proper wind-load and seismic mounting, anchorage, and bracing of the equipment for floor, ceiling, and wall/back installation location.

5. Seismic performance shall be based on actual install location of the respective equipment in the building and height above or below grade.

6. The Seismic Requirements are typical for each equipment item exceeding 100-pounds, including but not limited to the following:

a. Switchgear, switchboards, and motor control equipment
b. Transformers
c. Equipment racks and terminal cabinets
d. Panels
e. Conduits with floor, ceiling or wall attachment support and conduits with suspension attachments.
f. Busway, wire way and cable tray
g. Uninterruptable power supplies (UPS)
h. Inverters
i. Generators and related equipment
j. Lighting equipment
k. Fire alarm equipment

C. Wall Mounted Electrical Equipment

1. Surface Mounted Equipment

a. Provide multiple horizontal sections of metal “C” channels for support and attaching wall mounted equipment to walls. Channels shall provide “turned lips” at longitudinal edges to hold “lock-in” fasteners and shall comply with ANSI-1008 and ASTM-A569 latest revision. The channels shall be steel hot dip zinc galvanized. As manufactured by Unistrut or Kindorf.

b. The “C” channels shall be positioned horizontally within 3-inches of the top and bottom of each, equipment section cabinet and located behind each equipment vertical section. Provide additional intermediate “C” channels at not less than 36-inches on center between the “top” and “bottom” “C” channel positions, located behind each equipment vertical section.
c. The “C” channels shall be of sufficient length to provide connection to not less than two vertical structural wall framing elements separated by not less than 16-inches; but in no case shall the “C” channel length be less than the width of the respective equipment section.
d. Attach the “C” channels to the wall structural elements after the wall, finish surface, installation (including painting) is complete.
e. Attach the “C” channels with fasteners to the building wall framing structural elements as follows: welded to steel framing; bolted to wood framing; cast in place concrete inserts for masonry and concrete construction; drilled “afterset” expansion anchors for existing masonry and concrete construction.
f. Attach the equipment to the “C” channels with threaded and bolted fasteners to “pre-locate” and lock into the channel “turned lips” and channel walls.

2. Flush mount equipment

a. Provide anchor attachment of equipment into adjacent wall structural elements.

D. Housekeeping Pad

1. Provide cast-in-place, steel re-enforced concrete raised “housekeeping” pads under all floor standing electrical equipment (except data network equipment racks).

2. Pad sizes

a. The raised housekeeping pad height shall extend 4-inches above the surrounding finished floor elevation for interior building locations.
b. The pad shall extend 8-inches below finish grade plus 4-inches above finish grade for outdoor equipment location on grade.
c. The pads shall extend 7-inches past the “footprint” edge of the respective floor standing equipment.

3. Anchor equipment to pads. Anchor pads to the building structural floor. Equipment pad, equipment re-enforcing and equipment anchoring shall comply with Seismic Earthquake Requirements and Wind Load Requirements.

4. Unless shown otherwise on Drawings. The equipment housekeeping pad steel re-enforcing shall consist of two layers of Number-4 size steel-rebar laid horizontally and uniformly spaced 6-inches on center. Position rebar in two directions (90-degrees opposed) and centered inside the concrete house-keeping pad. Horizontal rebar shall extend to within 3-inches of the edge of the concrete pad in all directions. Metal wire “tie-wrap” shall be provided at each rebar crossing.

5. Equipment anchor attachments shall extend through the housekeeping pad and into the structural concrete below the pad a minimum of not less than 2-inches.

1.21 ELECTRICAL WORK CLOSEOUT

A. Prepare the following items and submit to the Owner's Representative before final acceptance.

1. Two copies of all test results as required under this Section.

2. Two copies of Local and/or State Code Enforcing Authority's Final Inspection Certificates.

3. Copies of Record Drawings as required under the General Conditions, pertinent Division One Sections and Electrical General Provisions.

4. Two copies of all receipts transferring portable or detachable parts to the Owner's Representative when requested.

5. Notify the Owner's Representative in writing when installation is complete and that a final inspection of this work can be performed. In the event any defect or deficiencies are found during this final inspection they shall be corrected to the satisfaction of the Owner's Representative before final acceptance can be issued.

6. Prior to energizing, retighten to the proper torque, each circuit conductor lug landing, each bus bar (phases, neutral and ground) and circuit protection device threaded connections in all switchboards, switchgear, motor control centers, transformers, busways, disconnect switches, motor starters, motor terminals and panelboards, after the equipment is installed/ connected and prior to energizing the equipment. The torque values shall comply with Manufacturer's recommendations.

B. Electrical Power Single Line Diagrams – SLD

1. Provide single line diagrams showing the Contract Document work complete electrical power system (normal and emergency). SLD shall show inter-connection circuits, electrical equipment, panels, and circuit protection devices, nominal 50% (½-size) approximately 18-inches by 24-inches. Show installed voltages and electrical capacity sizes.

2. SLD shall be mounted in metal (picture frame) rigid enclosure frame with rigid-backing (backer-board) and clear/transparent front, for hanging on wall. Provide clear transparent cover over SLD inside the frame.

3. Provide a wall-hung (±48-inches) SLD in each "main" and "sub" electrical equipment room. If wall space is limited, alternatively securely attach SLD frame to room door facing into the respective electrical room.

END OF SECTION 260500
010423/535050

SECTION 26 05 01

BASIC ELECTRICAL MATERIALS AND METHODS

PART 1 - GENERAL

1.1 SCOPE

A. Work Included: All labor, materials, appliances, tools, equipment, facilities, transportation, and services necessary for and incidental to performing all operations in connection with furnishing, delivery, and installation of the work of this Section, complete as shown on the Drawings and/or specified herein. Work includes, but is not necessarily limited to the following:

1. Examine all other Sections for work related to those other Sections and required to be included as work under this Section.

2. General Provisions and Requirements for electrical work.

1.2 SUBMITTALS (ADDITIONAL REQUIREMENTS)

A. Submit product data sheets for all outlet boxes, floor boxes, wiring devices, device plates, relays, contactors, timeswitches, and disconnects fuses.

B. Submit detailed Shop Drawings including Dimensioned Plans, elevations, details, schematic and point-to-point wiring diagrams and descriptive literature for all component parts for transformers, relays, time clocks and photocells.

C. Submit Transformer Test Reports.

D. Submit Material List for Outlet Boxes.

PART 2 - PRODUCTS

2.1 OUTLET AND JUNCTION BOXES

A. General:

1. Flush or concealed outlet boxes and junction boxes.

a. Non-masonry and/or non-concrete locations provide pressed steel boxes. Steel thickness not less than 0.062-inch, hot-dip galvanized. Knockout (KO) type with conduit entrances and quantities size to match conduits shown connecting to respective junction box and outlet box.
b. UL-514 listed and labeled.
c. Minimum required box depth is exclusive of extension-ring depth.
d. Provide all boxes with matching cover plates. Cover plates shall be gasketed water-tight in wet and outdoor locations.
e. Boxes installed in masonry or concrete shall be UL "concrete-tight" approved for installation in concrete and shall allow the placing of conduit without displacing reinforcing bars.

2. Provide outlet boxes of proper Code size for the number of wiring devices, connecting conduits, and conductors/cables or conduits passing through or terminating therein. In no case shall outlet box be less than 4.0-inches square by 2.125-inches deep. Unless specified elsewhere or noted otherwise on the Drawings, 2.5-inches minimum depth for box width's exceeding 2-gang.

3. Increase the minimum outlet box size to 4.69-inches square by not less than 2.125-inches deep, where one or more of the following conditions occurs:

    a. More than two conduits connect to the outlet box.
    b. Circuit "Homerun" or Conduit "Homerun" connects to outlet box.

4. Signal, Communication and Low Voltage Outlet Boxes:

    a. Individual or duplex audio/visual, telephone, computer or data outlets: 4.69-inches square by 2.125-inches deep minimum with single gang wide extension ring.
    b. Combination AV/signal/telephone/data or computer outlets: 4.69-inches square by 2.125-inches deep minimum with 2-gang wide extension ring.

5. Junction boxes shall be sized to comply with the following:

    a. Code Requirements size based on the conduit quantities, conduit sizes and wire-fill connected to the junction box.
    b. Junction box minimum size shall not be less than 4.69-inches square by 2.5-inches deep, but not less than size indicated on the Drawings or required by Code.

6. Provide extension rings on flush outlet boxes and flush junction boxes, to finish face of extension ring flush to (within ±0.63-inches) of finished building surfaces. Extension ring shall match outlet box materials/ construction and contain "attachment mounting-tabs" for wiring devices. Extension rings shall be "screw-attached" to respective box and maintain "ground" bonding continuity.

7. Outlet boxes installed in outdoor locations, or in wet locations, or in concrete/masonry, shall be cast-iron or cast-bronze, with threaded conduit hubs. UL rated for wet locations.

    a. Aluminum boxes shall NOT be in contact with concrete or masonry. Die-cast aluminum or cast aluminum water-tight electrical outlet boxes with threaded hubs may be provided as an alternate to cast-iron or cast-bronze outlet boxes, only where one or more of the following conditions occur:

        1) Outdoor locations above finish grade.
        2) Indoor wet locations surface or flush in walls or ceilings.
        3) Not in contact with concrete or masonry.

8. Provide fixture-supporting device in outlet boxes for surface mounted fixtures as required.

9. Provide solid gang boxes for three or more devices, typical for line and low voltage switches, receptacles, low voltage/signal outlets, etc. for mounting devices behind a common device plate.

10. Provide isolation barriers in outlet boxes:

    a. Between line voltage and low voltage devices.
    b. Where more than one device is installed in an outlet box, between and separating each device.
    c. Between 277-volt and 120-volt devices.
    d. Between devices connected to emergency and non-emergency circuits of all voltages.

11. Outlet boxes installed penetrating into fire rated walls, fire rated floors, fire rated ceilings and all fire rated construction. The outlet boxes shall be UL listed, classified and labeled, for fire rated and temperature rated penetration of the respective fire rated surface and fire rated construction. The outlet box fire rating and temperature rating shall equal or exceed the fire/temperature rating of the surface/construction being penetrated. Provide UL listed and labeled supplemental fire and temperature protection to maintain ratings:

    a. Wall and ceiling penetrations, supplemental tumescent fire wrap (external or internal of outlet box).
    b. Floors provide subfloor supplemental fireproofing below floor box.

12. Outlet boxes installed in floors. The floor outlet boxes shall be UL listed and labeled for scrub water exclusion Requirements, including but not limited to tiles, carpeting and exposed wood and concrete floor fishes.

13. Outdoor flush in wall device outlet boxes:

    a. Flush in wall outlet box with corrosion resistant gasketed watertight, hinged, key locking cast metal, self-closing cover. Tamper resistant and vandal resistant.
    b. UL-listed and labeled for installation in masonry, cast-in-place concrete, hollow-framed walls and wet locations.
    c. Flush cast-iron or cast-bronze or brass, device back-box, nominal 4.68-inch square by 2.25-inches deep.
    d. Internal metal adapter plate for wiring device types, in the box as indicated on the Drawings.
    e. As manufactured by Legrand/Pass and Seymour #4600 Series: or C.W. Cole #310 Series.

14. Refer to Architectural and Structural Contract Documents and Details for additional Box and Install Requirements.

B. Surface Outlet Boxes

1. Surface mounted outlet boxes, cast iron Type FS or FD, with threaded hubs as required. Box interior dimensions and interior volume capacity not less than

required for “press steel boxes”, and “sheet steel boxes”. Provide plugs in all unused openings. Provide weatherproof gaskets for all exterior boxes.

C. Floor Boxes

1. General:

a. Outlet boxes installed in floors. The floor outlet boxes shall be UL listed and labeled for Scrub Water Exclusion Requirements, including but not limited to floor tiles, carpeting and exposed wood and concrete floor fishes.
b. Electrical power receptacles in a floor box; shall be industrial grade wet location heavy-duty, high abuse rated devices, tamper resistant. Grounding type, 125 volts, 60Hz AC, 20-amp, NEMA 5-20R (duplex), or other NEMA configurations noted on the Drawings. Standard length receptacle mounting strap as required by the Manufacturer of floor box being furnished.
c. Tested, listed and labeled to comply with UL-514A and/or UL514C.

2. Pedestal Type Floor Outlets (Non-Poke-Thru Type)

a. Power (high potential) floor outlets pedestal shall be nominal 3-inches by 3-inches high by 4.5-inches long, die cast aluminum brushed finish with duplex grounding type convenience receptacles. Pedestal shall be mounted on 3-inches nominal depth metal, electrical flush in floor box, complete with proper adapter and nipple for mounting to floor box and attachment of conduits.

1) Back-to-back, two 20-amp 120 volt, 60Hz AC grounding duplex convenience receptacles.

b. Low voltage-signal (low potential) floor outlets pedestal shall be nominal 3-inches by 3-inches high by 4.5-inches long, die cast aluminum brushed finish. Pedestal shall be mounted on flush in floor 3-inches nominal depth metal, electrical floor box, complete with proper nipple and adapter for mounting to floor box and attachment of conduits. The Contractor shall provide the type of outlet(s) at each floor box location as required by the Low Voltage-Signal Contract Documents.
c. The pedestal shall provide 0.25-inch or greater protective top-over-hang (drip-lip) shading the wiring device coverplates. Provide stainless steel device coverplates.
d. Metal electrical floor boxes for pedestals shall be cast-iron, concrete pour rated or open framing rated as applicable. Not less than two 0.75-inch and two 1.0-inch conduit entrances. “Box Leveling” adjustable supports.
e. Pedestal as manufactured by Hubbell LO-CON/SC Series pedestal with matching cast-iron floor boxes; or Wiremold/ Legrand series pedestal with matching cast-iron floor boxes.

3. Poke-Thru floor boxes for “After-Set” Floor Outlets.

a. Through floor wiring for power and communication shall be UL listed with a fire and temperature rating of not less than 2-hours. The units shall include an internally divided floor fitting; a divided through-floor conduit/raceway, and a divided under floor junction “split-box” not less than 4.7-inches by 4.7-

inches by 2.125-inches in size. Junction box shall be installed concealed in ceiling space of the floor below. The length of the floor "through-raceway" shall match the thickness of the finish floor and as recommended by the Manufacturer. Unit shall be self-supporting without the attachment of an above floor fitting. Internal isolation barriers between high potential and low potential circuits and sections. The integral fire barrier shall incorporate a cold smoke barrier to prevent the passage of smoke when heat is not present.

b. Poke-Thru Floor boxes shall contain dual services for high potential and low potential devices and circuits.

c. Poke-Thru Floor pedestal type; (internally divided high potential and low potential sections) service fittings die cast, brushed aluminum, single piece device housing, with stainless steel device cover plates front and rear of the housing as follows:

    1) Front side (high potential) one 20-amp, 120 volt, 60Hz, AC, grounding duplex convenience outlet plugs.
    2) Rear side (low potential) shall contain "knockouts" or "keystones" as follows at locations shown on the Drawings:

        a) Knockouts for signal cables one 1-inch diameter and two 0.5-inch diameter with rubber bushing grommets for each knockout.
        b) Four RJ-45 keystone, snap-in retainers for low potential plug-in signal connections.
        c) The Contractor shall provide the type of outlet(s) at each poke-thru location as required by the low voltage-signal Contract Documents.

    3) Alternately where specifically indicated on the Drawings, the front and rear cover plates shall be supplied with knockouts for 1.0-inch flexible conduit "Furniture" connection, one per cover plate.
    4) The pedestal shall provide 0.25-inch or greater protective over-hang (drip-lip) of the device coverplates. Provide stainless steel device coverplates.

d. Non-Pedestal Poke-Thru flush in floor type; (internal divided high potential and low potential sections) die cast, flush with finish floor, metal cover flip-open, locking, hinged access covers. Open-close die cast aluminum port-covers for plug-in portable cable connections. ADA compliant, wide trim matching flange.

    1) Two 20-amp, 120-volt, 60Hz, AC, grounding duplex convenience receptacles for high potential power connections.
    2) Four RJ-45 keystone, snap-in retainers for low potential plug-in signal connections. The Contractor shall provide the type of outlet(s) at each poke-thru location as required by the Low Voltage-Signal Contract Documents.
    3) Cover shall close and lock after portable plug-in cables have been inserted into respective connections, under the cover.
    4) UL wet mop, scrub water rated for carpeted and non-carpeted floors.

e. Die cast aluminum cover, nominal 8-inch diameter metal housing flush in "core-hole", outlet metal body size.

f. Flush with floor or pedestal type as indicated on Drawings. As manufactured by Wiremold/Legrand# Evolution Poke-Thru 8AT Series, Smoke and Fire Rated Poke-Through fittings; no known equal.

4. Floor Boxes for Flush Floor Outlets (non-pedestal) recessed concealed inside outlet box, plug-in receptacles.

a. Provide cast-in-floor with concrete pour pan, rated for on grade to prevent direct earth contact, cast-in-place concrete floors on-grade and above-grade; adjustable "leveling-feet" for box.
b. UL wet mop, scrub water rated for carpeted and non-carpeted floors. UL-File E171211 installation fire rating and/or UL-Fire Resistance Classified.
c. Floor boxes shall contain dual services:

1) High potential with not less than two 120-volt 60Hz AC 20-amp grounding duplex convenience receptacles.
2) Low potential for low voltage system outlets and signal circuits with up to and including eight RJ-45 plug-in keystone snap-in retainer receptacles. The Contractor shall provide the type of outlet(s) at each poke-thru location as required by the Low Voltage-Signal Contract Documents.
3) Internal isolating barrier between high and low potential circuits and sections of box.
4) Also refer to Drawings for Additional Outlet Requirements.

d. Conduit knockouts in bottom of box and in each side walls of box. Not less than one 1.25-inch and one 0.75-inch knockouts for both low potential and high potential conduits connections on each opposing box sides. Include the same configuration of knockouts on the bottom of the box, for high potential section and low potential sections.
e. Floor box cover:

1) Flush tamper resistant "lock-down” removable main cover. Independent hinged "flip-out" port in the removable cover, to allow main box cover to be in a fully closed position with "plug-in" cords connected into box when the lock-down cover is closed. Main cover "lock-down" to prevent non-authorized access into box interior.
2) Brass, removable recessed main cover, rated for carpet, or tile for floor finish, brass overlapping trim cover finish. Cover recess depth 0.25-inch, 0.5-inch or 0.75-inch as required to match respective floor covering thickness and type. ADA compliant, wide trim matching flange.

f. Floor box with metal body, nominal box size 10-inches by 12-inches by depth to match floor, but not less than 3.0-inches deep box.
g. Floor box as manufactured by FSR #FL-500P Series; no known equal.

2.2 PULLBOXES

A. General

1. Sizes as indicated on the Drawings and in no case of less size or material thickness than required by the Governing Code and AHJ.

2. Exercise care in locating pullboxes to avoid installation in drain water flow areas and to clear existing condition interferences.

3. UL listed and labeled for electrical circuits.

B. General Purpose Sheet Metal Pullbox

1. General purpose sheet steel pullboxes: Install only in dry protected locations with removable screw attached covers. Manufacturer's standard rust proofing and baked enamel finishes.

2. Weatherproof sheet steel pull boxes: Fabricate of Code gauge steel. All surfaces interior and exterior hot-dip galvanized steel. Gasketed weather-tight cover of same material.

C. Concrete Pullboxes and Hand-Holes for Electrical

1. AASHTO H-20 traffic loading rated box and cover, pre-cast concrete, steel reinforced pullboxes and hand-holes. Provide complete with pulling irons, hot-dip galvanized metal traffic cover with hot-dip galvanized metal cover frame, pull-box concrete base with sump. Four cable full height wall racks with porcelain cable support blocks.

2. Boxes shall be “Intercept” type with multiple box sections. Extension cable-intercepts at both ends of box. Refer to Drawings for box size.

3. Covers shall be flush bolt down. Covers weighing more than 40-pounds shall be split cover type “Torsion-Sping” assist, hinged open-close.

4. Box covers shall comply with Federal ADA, UL, State and Local AHJ for slip resistance. Provide cast-or-bead weld on cover of pull box to indicate services within pullbox (i.e., "480/277-VOLT, 3-PHASE, 4-WIRE ELECTRICAL" OR “SIGNAL/TEL/P.A./CLOCK/FIRE ALARM" etc.).

5. Shall be set on a machine-compacted pea gravel base 12-inches thick with gravel base extend 6-inches beyond box base on all sides. Provide a 0.75-inch by 10-feet copper clad ground rod through the box bottom with 9-inch projection into box, for grounding all metal parts and frames with continuous #10AWG copper bond wire.

6. Seal all box joints and seal box between cover and frame with a mastic compound similar to Parmagum or Dukseal. After cables have been pulled, connected, tested and inspected, seal box cover and bolt-close cover.

7. As manufactured by Jensen Precast, or Oldcastle Precast.

2.3 SWITCHES, WIRING DEVICES

A. General

1. Provide wiring device circuit switches totally enclosed, electrical insulating Bakelite or electrical insulating composition base, manual operator type with 277-

volt 60Hz AC rating for full capacity contacts rated for incandescent lamp loads, fluorescent lamp loads and motor loads. Switch mounting-ears for screw attachment to outlet box. Switches shall be UL listed and labeled; conform to NEMA-WD1 and WD6.

2. Switch controlling (on-off) rated for all lighting loads and all non-lighting loads; switch ratings shall be 20-amp, unless indicated otherwise on Drawings.

3. Color as selected by Owner's Representative. Switches and wiring devices controlling circuits connected to emergency power shall be red.

4. All switches shall be of the same Manufacturer.

5. Where switches are mounted in multiple gang assembly and are operating at 277 volts and/or 277 volts and 120 volts or emergency/non-emergency and mounted in same outlet box, there shall be an insulating barrier installed between each switch.

6. Devices shall additionally be listed and labeled as UL-All Weather-Resistant wet-location for the following install locations:

   a. Devices indicated on Drawings as Weather-Proof (W.P.).
   b. Devices installed in outdoor locations
   c. Installed in classified wet or damp area locations both indoor and outdoor.

7. Wiring devices shall be listed and labeled for connection of both "solid" and "stranded" copper circuit conductors.

8. Switches with ampere and voltage ratings different than described herein. The different rated switches shall have the same characteristics and performance as the respective described switches, except for differing ampere and voltage characteristics.

B. Switches Heavy Duty (Toggle – Type)

1. Single Pole Switches – 20-amp at 277V

Manufacturer	Toggle Type	Lock Type
Hubbell	#HBL1221	#HBL1221-L
Legrand/P&S	#20AC1	#20AC1-L
Leviton	#1221	#1221-L
Cooper-Arrow/Hart	#AH1221	#AH1221-L

2. Double Pole Switch – 20-amp at 277V

Manufacturer	Toggle Type	Lock Type
Hubbell	#HBL1222	#HBL1222-L
Legrand/P&S	#20AC2	#20AC2-L
Leviton	#1222	#1222-L
Cooper-Arrow/Hart	#AH1222	#AH1222-L

3. Three-Way Switches – 20-amp at 277V

Manufacturer	Toggle Type	Lock Type
Hubbell	#HBL1223	#HBL1223

Legrand/P&S	#20AC3	#20AC3-L
Leviton	#1223	#1223-L
Cooper-Arrow/Hart	#AH1223	#AH1223-L

4. Four-Way Switches – 20-amp at 277V

Manufacturer	Toggle Type	Lock Type
Hubbell	#HBL1224	#HBL1224-L
Legrand/P&S	#20AC4	#20AC4-L
Leviton	#1224	#1224-L
Cooper-Arrow/Hart	#AH1224	#AH1224-L

5. Momentary Contact Switches – 20-amp at 277V

Manufacturer	3-Position Regular	3-Position Lock
Hubbell	#HBL1557	#HBL1557-L
Legrand/P&S	#1251	#1251-L
Leviton	#1251	#1251-L
Cooper-Arrow/Hart	#AH (extra)	#AH (extra)

6. Maintained Contact Switches (Double Throw, Center Off) – 20-amp at 277-volt

	Toggle Type		Lock Type	
Manufacturer	1-Pole	2-Pole	1-Pole	2-Pole
Legrand/P&S	#1225	#1226	#12250L	#1226-L
Hubbell	#HBL1385	#HBL1386-L	#HBL1385-L	#HBLM1386-L
Leviton	#1385	#1386		
Cooper-Arrow/Hart	#AH (extra)	#AH (extra)	#AH (extra)	#AH (extra)

7. Pilot lights used in conjunction with circuit switches shall be LED type with red jewel.

C. Weather-Proof (W.P.) Switches

1. Outdoor switches provide heavy-duty, tamper resistant gasketed weather- proof metal, hinged door cover for each switch.

2. Cover door shall be key locking-type or padlock-type.

D. Other Switches, Receptacles, Devices, and Outlets

1. Special devices outlets and outlet locations shall be as indicated on the Drawings. Modify device and outlet characteristics to accommodate the actual install location conditions for each outlet.

2.4 ELECTRIC RECEPTACLE WIRING DEVICES

A. General

1. All receptacle wiring devices in flush type outlet boxes shall be installed with a bonding jumper to connect the box to the receptacle ground terminal. Grounding through the receptacle mounting straps is not acceptable. The bonding jumper

shall be sized in accordance with the branch circuit protective device as tabulated herein under "Grounding". Bonding jumper shall be attached at each outlet to the back of the box using drilled and tapped holes and washer head screws 6-32 or larger (except isolated ground receptacles). For receptacles in surface mounted outlet boxes direct metal-to-metal contact between receptacle mounting strap (if it is connected to the grounding contacts) and outlet box may be used. Receptacle mounting-ears for screw attachment to outlet box. Receptacle shall be UL listed and labeled; conform to NEMA-WD1 and WD6.

2. All receptacles shall be a product of the same Manufacturer.

3. Receptacle color as selected by Owner's Representative. Receptacles connected to emergency power circuits shall be red.

4. Wiring devices shall be listed and labeled for connection of both "solid" and "stranded" copper circuit conductors.

5. Duplex convenience receptacles and 120-volt single phase branch circuits.

    a. Duplex (convenience) receptacle, wiring device with two single receptacles with the same electrical rating, integrated into a single assembly by the Manufacturer.
    b. 20-amp branch circuits with a single duplex convenience receptacle connection on each circuit, receptacles shall be rated for 20-amp.
    c. 15-amp and 20-amp branch circuits with two or more duplex convenience receptacle connections each circuit, receptacle shall be rated 15-amp or 20-amp.

6. Devices shall additionally be listed and labeled as UL-All Weather-Resistant, provide weather resistant receptacles for the following install locations. Modify Manufacturer's Catalog number descriptions, shall include all-weather-resistant UL listing and labeling:

    a. Devices indicated on Drawings as Weather-Proof (W.P.).
    b. Devices installed in outdoor locations.
    c. Devices installed in classified as damp or wet locations both indoor and outdoor.
    d. All GFCI (ground-fault) receptacles all locations.

7. Receptacles with ampere and voltage ratings different than described for duplex convenience receptacles. The different rated receptacles shall have the same characteristics and performance as the respective duplex convenience receptacles, except for differing ampere and voltage characteristics. Refer to "Floor Boxes" for additional Receptacle Requirements".

8. Receptacles shall be GFCI type for the following locations:

    a. located within 84-inches of a sink or hosebib shall be GFCI receptacles.
    b. Devices installed in outdoor locations.
    c. Devices installed in classified as damp or wet locations both indoor and outdoor.

d. Devices indicated on Drawings as GFCI or Weather-Proof (W.P.).

9 “Split-Wire” duplex convenience receptacles. Each split-wire receptacle plug connects on independent common circuit. Provide nameplate or graphic on face of receptacle describing the receptacle function and control source. Comply with California Title-24 and ASHRAE-90.1, latest revisions.

B. Duplex Convenience Receptacles.

1. Shall be grounding type, 120 volt and shall have two current carrying contacts and one grounding contact which are internally connected to the frame. Outlet shall accommodate standard parallel blade cap and shall be side wired. Receptacles shall be tamper-resistant–TR, UL-TR.

2. GFCI receptacles shall be all Weather-Resistant and wet location rated. Duplex rated 120-volt 60Hz AC, 20-amp, unless indicated otherwise on Drawings.

3. Heavy Duty Industrial Grade

Manufacturer	NEMA 5-15R	NEMA 5-20R	NEMA 5-20R-GFCI
Legrand/P&S	#5262	#5362	#2095HG
Leviton	#5262	#5362	#W7899
Hubbell	#CR5252	#5362	#GFR8300
Cooper-Arrow/Hart	#AH5262	#AH5362	#WRVGF20

C. Weatherproof (W.P.) Receptacle

1. Outdoor receptacles shall be duplex convenience GFCI type rated 20-amp 120-volt 60Hz AC weatherproof, GFCI, unless indicated otherwise on Drawings. Test-reset buttons and visual pilot.

2. GFCI receptacles shall be wet location and Weather-Resistant rated weatherproof, gasketed, key locking tamper resistant, wet location.

3. Outdoor, flush mount outlet with hinged, key-locking, weather-proof cover (CEC/NEC – 406.8 compliant). As manufactured by: Pass and Seymour/ Legrand #4600 Series; or C.W. Cole #310 Series.

4. On exposed conduit runs, provide weatherproof ground fault circuit interrupter type GFCI receptacles installed in "FS" condulet watertight cast metal body, with weather-proof spring door type covers, gasket watertight. Door shall be key locking-type or padlock-type.

D. Other Switches, Receptacles, Devices, and Outlets.

1. Special devices, outlets and outlet locations shall be as indicated on the Drawings. Modify device and outlet characteristics to accommodate the actual install location conditions for each outlet.

2.5 PLATES

A. Cover Plates for Devices

1. Provide cover plates for every line voltage and low voltage switch, receptacle, telephone, computer, television, signal and other device out-lets.

a. All cover plates shall be nylon or thermoplastic, color as selected by Architect.

2. Plates shall be as manufactured by P&S; or Hubbell; or Leviton; or General Electric.

2.6 STRUCTURAL AND MISCELLANEOUS STEEL

Structural and miscellaneous steel used in connection with electrical work and located out-of-doors or in damp locations, shall be hot dip galvanized unless otherwise specified. Included are underground pull box covers and similar electrical items. Galvanizing averages 2.0 ounce per square foot and conforms to ASTM A123.

2.7 FLASHING ASSEMBLIES

A. General

1. Flashing shall be compatible with the material being penetrated and with the pipe passing through the flashing. Coordinate with and comply with Manufacturer's recommendations, for both the flashing and the material being penetrated.

2. Provide lead metal flashing assemblies at all roof penetrations, unless recommended otherwise by Manufacturer.

3. Seal the joint between the flashing and pipe passing through the flashing with waterproofing compound.

4. Lead flashing for roof penetrations, as manufactured by: Santa Rosa Lead Products; or Semco; or Flashco.

B. Storm Collars

1. In addition to penetration flashing, provide a storm-collar counterflashing for each roof penetration flashing. Shall attach to the structure of the penetration and form a water-tight “Umbrella” counter flashing over the roof penetration flashing.

2. As manufactured by: STD-Storm collars; or ASI-Storm collars.

2.8 RELAYS, CONTACTORS, AND TIMESWITCHES

A. Individual Control Relays (HVAC Plumbing of the Control Functions)

1. Individual control relays shall have convertible contacts rated a minimum of 10-amp, 600-volt regardless of usage voltage. Coil voltage, number and type of contacts shall be verified and supplied to suit the specific usage as shown in the

wiring diagrams and/or schedules on the Electrical and Mechanical Drawings. Coil control circuit shall be independently fused, sized to protect coil. Relays shall be installed on prefabricated mounting strips. Each relay shall have a surge suppressor to limit coil transient voltages. Furnished in the NEMA Type I enclosure unless indicated otherwise.

2. The following relays are approved:

Manufacturer	Type
Cooper-Arrow/Hart	IMP
General Electric	Class CR 2811
Square D Co.	Class 8501, Type A
Westinghouse	Bul. 16-321, Type NH
Allen Bradley	Approved Equal

B. Contactors and/or Relays

1. Contactors and/or relays for control of lighting shall be 600-volt AC, electrically operated, mechanically held units, open type for panel mounting with number of poles and of size as indicated on the Drawings. Provide auxiliary control relay for operation of each contactor and/or relay with a 2-wire control circuit.

2. Contactors and/or relays shall be mounted in panelboards in barriered section under separate hinged lockable doors or in contactor and/or relay cabinets as called for on the Drawings. Contactors and/or relays shall be installed on Lord sound absorbing rubber mounts.

3. Contactors and/or relays shall be Automatic Switch Co. Bulletin #920 Series for 2-pole and 3-pole, Automatic Switch Co. Bulletin 917 Series with poles as indicated on Drawings. Coil control circuit shall be independently fused, sized to protect coil.

4. Contactors and/or relays shall be equipped with a switch, in the proper configuration, to disconnect the control circuit controlling the coil of the respective device. Control circuit disconnect switch shall be labeled showing function of device.

C. Time-switches

1. All timeswitches shall have synchronous motor drive for operation on 120 or 277-volt, 60Hz, AC and shall be furnished with a 10-hour, spring-driven, reserve-power motor. Contacts shall be rated 40-amp per pole.

   a. Exterior lighting timeswitches for control of individual circuits or electrically operated relays shall have astronomic dial and shall be Tork 7000ZL Series or approved equal by Paragon or Intermatic.
   b. Interior lighting timeswitches for control of individual circuits or electrically operated relays shall be Tork 7000 Series or approved equal by Paragon or Intermatic.

c. Timeswitches for control of air conditioning or plumbing equipment shall have 7-day dial and shall be Tork WL Series or approved equal by Paragon or Intermatic.

2. All timeswitches shall be mounted in separate section in top of panelboards under separate lockable door unless otherwise indicated on Drawings. Clear opening for time-switch shall be a minimum of 12-inches by 12-inches.

D. Contactors and/or Relays/Time-switch Cabinet

1. Contactors, relays, and/or timeswitches not indicated to be mounted in electrical panels shall be mounted in a cabinet, size as required, with hinged lockable door keyed same as panelboards. Construction of cabinet shall be similar to terminal cabinets.

2. Each contactor, relay or time-switch mounted in the contactor cabinet shall be barriered in its own compartment and shall be installed on Lord sound absorbing mounts.

3. Contactor cabinets shall be of the same Manufacturer as the panelboards.

4. Where relays and/or contactors occupy the same enclosure as time-switches they shall have a clear acrylic shield installed over each relay or contactor to guard line exposed parts from accidental contact by nonauthorized personnel.

2.9 DISCONNECTS (SAFETY SWITCHES)

A. General

1. Disconnect switches shall all be rated:

a. 600-volt 60Hz AC for all disconnect safety switches.
b. NEMA Type HD, quick-make, quick-break, H.P.-rated.
c. Fused Class "R", in NEMA Type I indoor location enclosure. Where enclosure is indicated outdoor or W.P. (Weather-Proof) switches shall be rain tight NEMA 3R enclosure. Lockable access door.
d. Number of poles horsepower rating and amperage as indicated on the Drawings.

2. Provide internal neutral bus, ground-lug and conductor landing lugs, size to match conductors shown on Drawings. Switch access door shall be interlocked with switch to prevent access inside switch when switch is “ON” closed position.

3. Maximum voltage, current and horsepower rating clearly marked on the switch enclosure and switches having dual element fuses shall have rating indicated on the nameplate.

4. Disconnect switch and fuses ampere rating shall also comply with Manufacturer’s recommendation for the connected load.

2.10 TRANSFORMERS (600 VOLTS AND BELOW)

A. General

1. Provide dry type transformers constructed to meet Underwriters' Laboratories Specification UL 506 and tested in accordance with ANSI and NEMA Standards. Performance on transformers equal to or better than ANSI, NEMA, IEEE and CEC/NEC published criteria.

    a. 60Hz AC line and load.

2. UL Class 220°C insulation with maximum winding temperature rise of 150°C in 40°C ambient at 100% continuous rated capacity with overload capacity per ANSI C57.12 and C57.96 vacuum impregnated core and coil insulation.

3. Transformers shall be equipped with not less than a total of five 2.5% full capacity voltage taps; two taps above normal voltage; and three taps below normal voltage.

4. Line and load terminals shall be accessible, located behind removable front cover plate. Transformer connects shall terminate in “Conductor-Lugs” to match line side incoming and outgoing secondary side conductors, shall occur on a common (same) side of transformer on insulated supports.

5. Provide wall mount and ceiling mount transformers support brackets, platforms and attachment structures for transformers.

6. Dry type transformers shall meet or exceed NEMA TP-1 (latest revision), Class-1 efficiency levels. Shall be marked as energy efficient for United States Department of Energy and Environmental Protection Agency DOE/ EPA “Energy Star” complaint.

7. Transformer windings shall be copper or aluminum.

8. Electrostatic Shield: Provide full width, copper, 100% electrostatic shield (Faraday Shield), between line and load transformer windings, on each transformer phase. Shield shall be low impedance grounded to the transformer metal frame and shall attenuate common mode electrical noise 120dB at 1-500MHz range and transverse mode electrical noise, 30dB at 1-500MHz range. Average effective coupling capacitance of thirty picofarads between line and load sides.

9. Connect transformers by one of the following methods:

    a. Underfloor conduit resulting in no rigid connections to transformer (provide ground strap for equipment ground).
    b. Liquid tight flexible metal conduit (provide ground wire for equipment ground).
    c. Pullbox or wireways from transformer which are isolated from transformer with an approved sound absorbing neoprene gasket (provide ground strap for equipment ground).

10. The physical dimensions of the transformer shall not exceed the size shown on the Drawings.

11. Transformer and transformer mounting shall be designed and tested and comply with install location seismic earthquake resistance seismic loads, typical for floor, wall and ceiling mount/suspended transformers. Bolt floor-mounted transformers to floor and mounting brackets or wall/ceiling brackets as applicable. Provide seismic rated isolation rubber mounts, on each attachment contact location.

B. Test Requirements:

1. The transformers shall be subjected to the following production tests:

a. Applied Potential
b. Induced Potential
c. No Load Loss.
d. Voltage Ratio.
e. Polarity
f. Continuity

2. The Manufacturer shall have performed the following additional tests on transformer units identical to the design type being supplied to this Specification. Proof of performance of these tests in the form of test data sheets shall be provided at the Time Shop Drawings are submitted for approval.

a. Sound Levels
b. Temperature
c. Full Load and 50% Load Losses for linear and nonlinear loads
d. Voltage Regulation
e. Impedance

C. Transformer Housing

1. Metal, air cooled enclosure

a. Removable metal NEMA 1 enclosure, indoor location
b. Removable NEMA – 3R enclosures, outdoor locations, with vent shields and rodent shields.
c. Provide screen protected ventilation for all openings, including bottom of housing, to prevent accidental contact with internal components and prevent rodent/insect entrance.

2. Manufacture’s rust inhibitor primer and standard finish paint.

3. Removable lifting and skidding provisions.

4. Provide wall mount and ceiling mount transformers support brackets, platforms and attachment structures for transformers.

D. Sound Levels: Transformer sound levels, between no load to full load, shall be guaranteed by the Manufacturer not to exceed the following values:

9kVA and below	40dBa
10kVA to 50kVA	45dBa
51kVA to 150kVA	50dBa
151kVA to 300kVA	55dBa
301kVA to 500kVA	60dBa

2.11 CONCRETE WORK (ADDITIONAL REQUIREMENTS)

A. Portland Cement

1. ASTM C33- (latest revision), Type II, Low Alkali Cement. Composed of Portland cement, coarse aggregate, fine aggregate, and water.

   a. Concrete for use as electrical equipment footings, lighting pole bases and equipment slabs on grade, concrete shall attain minimum 28-day compressive strength of 4000psi, using not less than 5.75 sacks of cement per cubic yard of wet concrete.
   b. Concrete for underground duct/conduit encasement, the minimum 28-day compressive strength shall be 2000psi. Provide a minimum of 10-pounds of red oxide concrete coloring per yard of concrete.
   c. Mix shall obtain a 6-inches slump, measured with standard slump cone per ASTM C143/C143M (latest revision).

2. Coarse Aggregate: Uniformly graded between maximum size not over 1½-inch and not less than 0.75-inch and minimum Size #4, crushed rock or washed gravel. For concrete encased conduit only, maximum aggregate size shall be ½-inch.

3. Fine Aggregate: Clean, natural washed sand of hard and durable particles varying from fine to particles passing ⅜-inch screen, of which at least 12% shall pass fifty mesh screens.

B. Water: Clean and free from deleterious quantities of acids, alkalis, salts, or organic materials.

C. Reinforcement

1. Bars: Intermediate Grade Steel conforming to ASTM A615/A615M grade 60, with pattern deformations.

2. Welded Wire Fabric: ASTM A185/A185M.

3. Bending: Conform to Requirements of ACI 318.

D. Form Material: For exposed work, use PS 1-66 "B-B Concrete Form" plywood forms, or equal. Elsewhere, forms may be plywood, metal, or 1-inch by 6-inch boards. Forms for round lighting pole bases shall be Sono-tube.

2.12 WIREWAY

A. General:

1. Unobstructed lay in type, metal wireway, fittings and connectors UL listed for use as wireway and auxiliary gutter. Length, elbows and "T-S" as shown on Drawings. Minimum cross-section size 4-inches by 4-inches, but not less than shown on the Drawings. Suitable for mounting in any position orientation.

B. Construction:

1. Minimum metal gauge shall not be less than 14-gage.

2. Cover shall be hinged entire length of cover. Cover shall be held in the closed position with bolts and nuts.

3. Provide spring nuts on all hardware fastener penetrations into the interior of the wireway to protect against wire insulation damage.

4. The inside of 90-degree corners in the wireway shall be a 45-degree bevel.

5. Grounding continuity between wireway sections and fittings shall be continuous the entire length of the wireway.

C. Finish:

1. Indoor non-raintight, rust inhibitor phosphatizing base coating and baked enamel finish, Manufacturer's standard color.

2. Raintight outdoor-galvanized metal, with corrosion resistant phosphate primer and baked enamel finish, Manufacturer's standard color, NEMA 3R construction.

3. All hardware shall be plated to prevent corrosion.

PART 3 - EXECUTION

3.1 GROUNDING (ADDITIONAL REQUIREMENTS)

A. Grounding shall be executed in accordance with all applicable Codes and Regulations, both State of California and Local Authorities Having Jurisdiction.

B. The Neutral of each Transformer and each Uninterruptable Power Supply - UPS and each inverter shall be grounded by individual separate ground conductors in individual conduits as follows:

1. Conductor and conduit shall be grounded to building main ground bus.

2. Conductor and conduit shall be grounded to respective room/closet ground bus, where occurs.

3. Conductor and conduit shall be grounded to nearest available effectively grounded building structural steel member or grounded metal cold water pipe.

4. The neutral ground conductors for secondary side of each transformer each, inverter and each UPS unit shall be copper and shall be sized according to the following table:

Secondary Total Equivalent Size Copper	Neutral Ground Wire Size Copper
#2 or smaller	#6-1-inch conduit
1 or 1/0	#4-1-inch conduit
2/0 or 3/0	#2-1¼-inch conduit
4/0 thru 350 MCM	#1-1¼-inch conduit
Over 350 MCM thru 600 MCM	2/0-1½-inch conduit
Over 600 MCM thru 1100 MCM	3/0-1½-inch conduit
Over 1100 MCM	4/0-2-inch conduit

C. Each pullbox or any other enclosure in which several ground wires are terminated shall be equipped with a ground bus secured to the interior of the enclosure. The bus shall have a separate lug for each ground conductor. No more than one conductor shall be installed per lug.

D. The Maximum Resistance to Ground shall not exceed 5 ohms.

3.2 OUTLET AND JUNCTION BOXES

A. General:

1. Accurately place boxes and securely fastens to structural members. Where outlets are shown at same location but at different mounting heights, install outlets in one vertical line. Where outlets are shown at same location and mounting height, mount outlets as close together in a horizontal row as possible. Where the outlet boxes for switches and receptacles are shown at the same location and mounting height, mount in common outlet box with barriers between devices. Provide single piece multi-gang cover plate for close mounted outlet boxes. Where switches are shown on wall adjacent to hinge side of doors, box shall be installed to clear door when door is fully opened.

2. Flush mounted boxes shall be attached to not less than two parallel studs or structure members by means of metal supports. The supports shall span between and attach to the structure members.

3. Boxes above accessible ceilings shall be attached to structural members. Where boxes are suspended, they shall be supported independently of conduit system by means of hanger rods and/or preformed steel channels. Boxes shall be supported independently of all piping, ductwork, equipment, ceiling hanger wires and suspended ceiling grid system.

4. Surface mounted outlets shall be attached to concrete or masonry walls by means of expansion shields.

5. Floor boxes shall be installed level with finish floor and within adjustable limits of floor ring. Where outlets are shown at same or adjacent location, use multi-gang boxes.

    a. Provide cut-outs in the sub-floor assembly, to accept the recess depth of each electrical floor box. Provide added “fire-proof” applications on the bottom of each floor box location extending through the sub-floor. The “fire-proof” application shall be equal to the floor fire-assembly withstand rating.
    b. Poke-thru floor outlets, core drill floor for installation of poke-thru. Install “split-box” in the ceiling space of the floor below. If the ceiling space of the floor below is not accessible ceiling type (lift-out), then provide 12-inches round removable fire-rated stainless steel access panel and trim-ring in the finish ceiling for hand-access to poke-thru “split-box” above the ceiling.

6. Outlet Box Horizontal and Vertical Separation: Outlet boxes and device outlet rings installed flush in walls shall be horizontally and vertically separated by not less than 24-inches (edge of box to edge of box) from device outlet boxes and rings in common wall surfaces located on the opposite (back) side of the same wall.

    a. Where the separation cannot be maintained, provide a solid backing behind and completely enclosing each outlet box.
    b. The backing shall extend the width of the wall cavity (i.e., between "studs" or masonry cells) behind the box and 12-inches above and below the outlet box centerline, completely enclosing the outlet box.
    c. The backing shall consist of the following:

        1) ⅝-inch thick gypsum board anchored in place for "Stud" wall construction.
        2) Solid "Mortar" to completely fill the outlet box "Cell" behind the box in masonry construction.

7. Provide metal outlet box for each device. Install devices in metal outlet boxes. Typical for all wiring devices including, switches, receptacles, line voltage devices, and low voltage/signal system devices.

B. Fire Wrap:

1. In fire rated walls and ceilings provide fire rated "Box-Wrap" around the outside of each outlet box placed in fire rated wall or ceiling. Install the fire wrap on exterior of box inside the wall or ceiling, to maintain the fire rating of wall or ceiling with the installed outlet boxes.

3.3 SWITCHES AND RECEPTACLES-DEVICES

A. General

1. Provide outlet boxes for all devices, switches, receptacles, both line-voltage and low-voltage.

2. Devices installed in wireways shall be installed flush in wireway assembly.

3. Install and screw attach devices into outlet boxes and wireways.

4. Provide ground circuit connections to all devices.

5. Provide branch circuit connections to all devices.

6. Provide testing and commissioning for proper operation and phase/ground connectors.

    a. Test each GFCI devices and Arc-Fault devices after installation and circuit connection is complete.
    b. Test all devices for correct polarity and proper electrical energization.
    c. Test On-Off operation of automatically controlled outlets and receptacles.

7. Install and adjust all coverplates to be flush and level, with correct device and circuit identification.

8. Were one or more devices occurring at the proximity with other similar devices, all the devices shall be “Granged” under one common coverplate as follows:

    a. Duplex convenience receptacles with other proximity (within 18-inches) duplex convenience receptacles.
    b. Lighting control switches not exceeding 20-amp switch rating with other proximity (within 18-inches) similar switches.

B. Line-Voltage Plug-In Type Receptacle Installation Orientation:

1. The “Ground-Pin” shall face “UP” at the receptacle top location (double duplex) 4-plex, individual and vertically mounted individual duplex receptacles.

2. The “Neutral-Blade” shall face “UP” at the receptacle top location on horizontally mounted duplex receptacles.

3.4 CONCRETE WORK

A. Form:

1. Space forms properly with spreaders and securely tie together. Do not use twisted wire form ties. Keep forms wet to prevent joints from opening up before concrete is placed. Replace improper construction as directed. Do not use wood inside forms.

2. Build in and set all anchors, dowels, bolts, sleeves, iron frames, expansion joints and other materials required for the Electrical Work. Place all items carefully, true, straight, plumb, and even.

3. Carefully remove all exposed forms. Cut nails and tie wires below face of concrete and fill all holes. Rubbish will not be allowed to remain in, under, or around concrete.

B. Mixing: Use batch machine mixer of approved type. After ingredients are in mixer, mix for at least 1½-minutes.

C. Transit Mixing: In lieu of mixing at site, transit mixing may be used if rate of delivery, haul time, mixing time, and hopper capacity is such that concrete delivered will be placed in forms within 90-minutes from time of introduction of cement and water to mixer.

D. Placing of Concrete

1. Before placing concrete, remove wood, rubbish, vegetable matter and loose material from inside forms. Thoroughly wet down wood forms to close joints.

2. Clean reinforcement; remove paint, loose rust, scale and foreign material. Bars with bends not called for will be rejected. Hold securely in place to prevent displacement. Lap bar splices 24-diameters, min; lap fabric one mesh min. Tie intersections, corners, splices with 16-gallon annealed wire, or as otherwise called for.

3. Place concrete immediately after mixing. Do not use concrete that has begun to set; no tempering will be allowed. If chuting is used, avoid segregation. In placing new concrete against existing concrete, use bonding agent per Manufacturer's directions.

4. Give careful and thorough attention to curing of concrete. Keep concrete and forms wet for a minimum of 10-days, after placing concrete.

E. Concrete Finish

1. Finish of Exposed Concrete: Horizontal surfaces, steel troweled monolithic finish; vertical surfaces, smooth and free of fins, holes, projection, etc.

2. Exposed lighting pole bases shall be filled, and sack finished to a smooth finish.

3. Remove concrete pour-forms.

3.5 WIREWAY INSTALLATION

Wireway hangers shall provide clamp type, hanger rod type, direct bolted bracket type from ceiling or walls as indicated on the Drawings and required for field installation locations. Supports shall be installed a minimum of 5-feet on center.

END OF SECTION 26 05 01
010423/535050

SECTION 26 05 30

CONDUIT AND WIRE

PART 1 - GENERAL

1.1 SCOPE

A. Work Included: All labor, materials, appliances, tools, equipment, facilities, transportation, and services necessary for and incidental to performing all operations in connection with furnishing, delivery, and installation of the work of this Section, complete as shown on the Drawings and/or specified herein. Work includes, but is not necessarily limited to the following:

1. Examine all other Sections for work related to those other Sections and required to be included as work under this Section.

2. General Provisions and Requirements for electrical work.

1.2 SUBMITTALS (ADDITIONAL REQUIREMENTS)

A. Submit product data sheets for all wire, supports, conduit, raceways, ground rods, fittings, and splicing materials.

B. Submit material list for all conduit and conduit fittings.

C. Submit Details and Structural Engineer (PE) Calculations for conduit support systems.

PART 2 - PRODUCTS

2.1 CONDUIT

A. General

1. The interior surfaces of conduits and fittings shall be continuous and smooth, with a constant interior diameter. Conduits and conduit fittings shall provide conductor raceways of fully enclosed circular cross section. The interior surfaces of conduits and fittings shall be without ridges, burrs irregularities or obstructions. Conduits and fittings of the same type shall be of the same uniform weight and thickness.

2. Type of conduit, type of conduit fittings and conduit supports shall be suitable for the conditions of use and the conditions of location of installation, based on the Manufacturer’s recommendations and based on applicable Codes.

3. All fittings for metal conduit shall be suitable for use as a grounding means, pursuant to the applicable Code Requirements. All metal conduit and metal conduit fittings shall provide 3-second duration ground fault current carrying ratings, when installed and connected to the respective conduit, as follows:

a. RMC and EMT conduit fittings.

1) 0.5-inch through 1.5-inch conduit/fitting size - 10,000-amp RMS.
2) 2.0-inches and larger conduit/fitting size - 20,000-amp RMS.

b. FMC and LTFMC Conduit Fittings

1) 0.5-inch through 1.25-inch conduit/fitting size - 1,000-amp RMS (without external bonding jumper).
2) 1.5-inch through 4.0-inch fitting size - 10,000-amp RMS with bonding jumper.

4. Protective corrosion resistant finish for metal conduit fabricated from steel and metal conduit fittings fabricated from steel, shall be as follows:

a. Clean all metal surfaces (including metal threads) with acid bath “Pickle” prior to coating, to remove dirt, oil and prepare surfaces for galvanizing.
b. Hot-dip galvanized zinc coating on all interior and exterior steel surfaces. Minimum finish zinc coating thickness shall not be less than 0.002 inches.
c. Threads shall be hot-dip zinc coated after machine fabrication.
d. Exterior metal surfaces shall be finished with clear organic polymer topcoat layer, after galvanizing.
e. The inner metal surfaces of conduit fittings shall be finished with a lubricating topcoat after galvanizing, to facilitate conductor pulling through the conduit/fitting.

5. Threads for metal conduit and metal conduit fittings shall be taper-pipe-thread, National Pipe Standards (NPS) and shall comply with ANSI-B1.20.1.

6. Metal conduit termination connector fittings shall be provided with a Manufacturer installed, insulating throat bushing inside the fitting. The bushing shall protect the wire conductor insulation from cutting, nicks and abrasion during conductor installation and electrical load “Cycling” after installation is complete. The bushing shall comply with UL 94V-0 flammability.

7. Provide conduit bonding/grounding jumper from metal enclosures with “Concentric Ring” knockouts, to positively ground/bond each respective conduit(s) to the metal enclosure.

8. Metal conduit fittings connecting to PVC coated metal conduit shall be PVC coated to match the conduit.

9. The conduit and fittings shall be watertight and airtight without cracks and pinholes.

B. Rigid Metal Conduit (RMC)

1. Rigid metal, round tubing, machine threaded at both ends.

a. The conduit and conduit fittings shall comply with the Requirements for an equipment grounding conductor, pursuant to applicable Codes.

2. RMC raceway types shall be as follows:

    a. Rigid Galvanized Steel conduit (RGS), minimum yield strength shall be 35,000 PSI. Shall comply with NEMA Standard 5-19 (latest revision); ANSI C80.1 and ANSI-C80.4 (latest revision); UL 514-B and UL 6 (latest revisions); National Pipe Standard Specification (latest revision).
    b. Intermediate steel conduit (IMC). Shall comply with NEMA Standard 5-19 (latest revision) ANSI-C80.6 (latest revision); UL 2142 (latest revision).

3. RMC fittings:

    a. Fittings shall be compatible with RGS and IMC.
    b. Fittings shall be rated “Liquid Tight”.
    c. Fittings imbedded in concrete shall be rated “Liquid Tight” and “concrete tight”.
    d. Connectors and couplings for terminating, connecting and coupling to RMC conduit shall be threaded metal.
    e. Fittings shall comply with ANSI C80.4 and ANSI C33-84 (latest revision); NEMA FB1 (latest revision); UL 514 (latest revision).
    f. Conduit seal fittings:

        1) Conduit seals shall prevent the passage of gasses, liquids and vapors past the location of the seal installation in the conduit.
        2) Conduit seals shall be suitable for installation in both vertical and horizontal conduit locations.
        3) Conduit seals shall be visible and accessible for inspection after installation is complete.
        4) Conduit seals shall be rated for the following locations:

            a) Wet locations
            b) Classified hazardous location materials NEC Class 1 Division 1.
            c) Temperature ranges from minus 20 degrees centigrade through plus 90 degrees centigrade.

        5) Conduit seals, sealing compound and sealing compound “dam” shall be the products of the same Manufacturer.

4. RMC fittings as manufactured by:

    a. For threaded enclosure, termination connection.

        1) Thomas & Betts - 106 Series bonding locknut, 5302 Series sealing ring with stainless steel retainer.

    b. For non-threaded enclosure, termination connector.

        1) Thomas & Betts - 370 Series watertight threaded sealing hub, 106 Series threaded bonding lock nut, Sta-Con Series enclosure bonding jumper and 3870 Series threaded ground bushing.
        2) Emerson-OZ/Gedney-CHMT/CHT watertight threaded hub with bonding locknut and GH50G Series enclosure bonding jumper.

c. For RMC-to-RMC conduit-to-conduit coupling

1) Thomas & Betts/Erickson - 674 (threaded) Series
2) Emerson-OZ/Gedney Type TPC (threaded) Series
3) Threaded RMC conduit couplings, product of the same Manufacturer as the RMC conduit.

d. For RMC Conduit Seals

1) Emerson-OZ/Gedney-EYA and EYAM (threaded) Series
2) Appleton-EYF and EYM (threaded) Series

C. Electrical Metallic Tubing (EMT)

1. Rigid metal round tubing, “Thin Wall” steel construction, with non-threaded ends.

a. The conduit and conduit fittings shall comply with the Requirements for an equipment grounding conductor pursuant to applicable Codes.
b. The conduit shall be watertight and airtight without cracks and pinholes.

2. EMT shall be allowed for conduit size ranges from 0.5-inch through 4.0-inches.

3. Comply with ANSI C80.3, C80.4, and ANSI C33.98 (latest revisions); UL 594 and UL 797 (latest revisions); CEC Section 12500 (latest revision).

4. EMT fittings:

a. Connectors and couplings for terminating, connecting and coupling to EMT conduit shall be non-threaded steel fabrication.
b. EMT termination connector fittings shall be as follows:

1) Set screw type “Concrete Tight” when installed in dry interior locations.
2) Compression types “Rain Tight” and “Concrete Tight” when installed in wet or damp locations, outdoors and in concrete or masonry construction.

c. Fittings shall comply with ANSI C33.84 (latest revision); UL 514 (latest revision); NEMA FB-1.

5. EMT fittings as manufactured by:

a. For threaded and non-threaded enclosure, termination connector

1) Thomas & Betts-TC721A (set screw type) Series (with locknuts).
2) Emerson-OZ/Gedney-TC500I (set screw type) Series (with locknuts).
3) Thomas & Betts-5123 (compression type) Series (with two locknuts).
4) Emerson-OZ/Gedney-TC600I (compression type) Series (with locknut).
5) Thomas & Betts-4240 (compression type) Series (90-degree angle with locknut).
6) Emerson-OZ/Gedney-TWL (compression type) Series (90-degree angle with locknut).

b. For EMT-to-EMT conduit-to-conduit coupling:

1) Thomas & Betts-TK121A (set screw type) Series (with locknut).
2) Emerson-OZ/Gedney-5000 (set screw type) Series (with locknut).
3) Thomas & Betts-5120 (compression type) Series.
4) Emerson-OZ/Gedney-TC600 (compression type) Series.

c. For EMT to RMC conduit to conduit combination coupling:

1) Thomas & Betts-HT221 (set screw type) Series.
2) Emerson-OZ/Gedney-ESR (set screw type) Series.
3) Thomas & Betts-530 (compression type) Series.
4) Emerson-OZ/Gedney-ETR (compression type) Series.

D. Flexible Metal Conduit (FMC)

1. Round flexible conduit, fabricated from a single continuous steel strip. The steel shall be factory formed into continuous interlocking convolutions to form a complete lock between steel strips and provide raceway flexibility.

2. Metal to metal grounding contact shall be maintained throughout the length of the FMC conduit.

3. FMC shall be allowed for conduit size ranges from 0.5 inch through 4.0-inches.

4. FMC shall comply with ANSI-C.33.84 and ANSI C33.92; NEMA FB-1; CEC 12-1100.

5. FMC Fittings

a. FMC fittings shall be malleable iron construction or steel construction.
b. Fitting shall automatically cause the FMC raceway throat opening to be centered with respect to the fitting throat opening.
c. Straight and angled connector termination fittings shall be threaded on one end and shall include a threaded locknut, suitable for connection to threaded and unthreaded enclosures.
d. The attachment of the fittings to FMC shall be angled saddle type, to engage and interlock with the FMC spiral groove, and shall be unaffected by vibration. Direct bearing screw type fittings shall not be used.
e. Direct FMC conduit-to-FMC conduit coupling of FMC shall not be permitted.
f. Shall comply with ANSI C33.9, and ANSI C33.92 (latest revision); NEMA FB1 (latest revision); UL 514.

6. FMC fittings as manufactured by:

a. Straight Termination Connectors
Thomas & Betts - 3110 Series (with locknut)
45- and 90-Degree Angle Connectors
Thomas & Betts - 3130 Series (with locknut)

b. FMC to EMT conduit combination coupling:
Thomas & Betts 503TB Series.

E. Liquid Tight Flexible Metal Conduit (LTFMC)

1. The metal conduit core of LTFMC shall comply with the same Requirements as FMC conduit, with the addition of a thermoplastic exterior flexible jacket over the metal core.

2. The exterior jacket shall be positively locked to the metal core to prevent jacket “sleeving”.

3. The LTFMC shall be rated for installation and operating service temperatures of between minus 20-degrees centigrade through plus 90-degrees centigrade.

4. The LTFMC jacket shall be suitable for continuous exposure to sunlight, rainwater, water vapor, mineral oils and liquid solvents, without penetrating into the conduit and without deteriorating the jacket.

5. LTFMC sizes from 0.5-inch through 1.25-inches shall include an additional internal ground conductor, fabricated by the Manufacturer, as an integral part of the conduit core.

6. Direct LTFMC conduit-to-LTFMC conduit coupling of LTFMC shall not be permitted.

7. LTFMC shall be allowed for conduit size ranges from 0.5-inch through 4.0-inches.

8. In addition to the Requirements for FMC conduit, LTFMC shall also comply with ANSI C-33.84 (latest revision); NEMA-FB1 (latest revision); CEC 12-1400 (latest revision).

9. LTFMC fittings

   a. Fittings shall include an external mechanical ground/bond wire connector.
   b. The attachment of the fitting to LTFMC shall be threaded compression type onto the conduit core with locknut and liquid tight jacket compression seal. The fitting shall automatically prevent “Sleeving” of the jacket.
   c. Straight and angled termination connector fittings shall be threaded on one end and shall include locknut suitable for connection to threaded and unthreaded enclosures.

10. LTFMC fittings as manufactured by:

    a. Termination connector fittings:
       <u>Straight</u>

       1) Thomas & Betts - 5331 GR Series.
       2) Appleton-STB Series; STN-L Series for use with preformed “knockouts”
       3) Emerson- OZ/Gedney - 4Q Series.

       <u>45- and 90-Degree Angle Connectors</u>

       1) Thomas & Betts - 5341GR and 5351GR Series.

2) Appleton-STB-L Series; STN-L Series for use with preformed "knockouts".
3) Emerson-OZ/Gedney-4Q Series

b. LTFMC to RMC conduit to conduit combination coupling fittings:

1) Thomas & Betts-5271 GR Series.
2) Emerson-OZ/Gedney-4Q Series

F. Rigid Non-Metallic Conduit (RNMC)

1. General

a. Fabricated from homogeneous material, free from visible cracks, holes or foreign inclusions, with integral "End-Bell". The conduit and conduit fittings shall be watertight and airtight.
b. Conduit, conduit fittings and conduit fitting assembly "Solvent Cement" shall all be the product of the same Manufacturer. RNMC Conduit and fittings shall be solvent cement welded watertight.
c. Conduit and fittings shall be identified with legible markings showing ratings, size and Manufacturers name.
d. RNMC and fitting shall be corrosion resistant, watertight.
e. Conduit and fittings shall be suitable for conductor and ambient operating temperatures from minus 20 degrees centigrade to plus 90 degrees centigrade.
f. RNMC shall comply with NEMA TC-2 (PVC 40 conduit, latest revision) NEMA TC-6 (EB conduit latest revision) and NEMA TC-3 (fittings, latest revision); UL 514 and UL 651 (latest revision).

2. Polyvinyl Chloride (PVC)-RNMC

a. PVC-Schedule 40 heavy wall construction.
b. PVC-Schedule 80 extra heavy wall construction.
c. PVC-Type EB, with concrete full encasement end-to-end.

3. RNMC fittings connecting to metallic raceways shall be provided with a ground/bond jumper connection.

G. Expansion Joint, Deflection Joint and Seismic Joint Conduit Fittings

1. Expansion Conduit Fitting - Fitting shall provide for a minimum of 2-inches straight line movement between two connecting conduits in each direction (total 4-inches conduit expansion and contraction) parallel to the respective conduit lengths. Fitting shall be watertight.

2. Deflection Conduit Fitting - Fitting shall provide for a minimum of 30 degrees angular deflection movement ("Shear" deflection) between two connecting conduits, in any direction perpendicular to the length of the respective conduits. Fitting shall be watertight.

3. Combination Expansion/Deflection Conduit Fitting - Fitting shall provide the combined "Expansion" and "Deflection" movement capacity between two

connecting conduits as described for separate “expansion” and “Deflection” conduit fittings. Fitting shall be approved for installation concealed in both masonry/concrete construction; concealed inside hollow wall and in ceiling construction; and exposed non-masonry/ concrete construction. Fitting shall be watertight.

4. Fittings shall comply with UL.

5. Fittings as manufactured by:

    a. Conduit expansion fittings exposed, or concealed locations as manufactured by:

        1) Emerson-OZ/Gedney – AXB-8 Series for RMC conduit.
        2) Emerson-OZ/Gedney - TX Series for EMT conduit.
        3) Appleton – AXB or XJ8 Series for RMC conduit and EMT conduits. Provide RMC to EMT combination conduit coupling fittings for each end of the expansion fitting.

    b. Combination expansion/deflection conduit fittings exposed, or concealed conduit locations as manufactured by:

        1) Emerson-OZ/Gedney-AXDX Series for RMC conduit.
        2) Emerson-OZ/Gedney-AXDX Series for EMT conduit.
        3) Appleton-DX Series for RMC conduit.
        4) Provide RMC to EMT combination conduit coupling fittings for each end of the expansion/ deflection fitting.

    c. Conduit expansion/deflection fittings for FMC and LTFMC conduit.

        1) Provide a minimum of 12-inches of “Slack” LTFMC in each FMC or LTFMC conduit at building and structure seismic or expansion joint conduit crossings.
        2) Note: Each FMC “Slack” expansion/deflection location, shall be considered as not less than a 90-degree conduit bend location, for compliance with the maximum quantity of conduit bends allowed in a raceway.

6. Conduit fitting bonding jumper:

    a. The grounding/bonding path of metal conduit shall be maintained by the fitting.
    b. Provide a bonding jumper at each expansion, deflection and combination expansion deflection conduit fitting.
    c. The jumper shall be a bare flexible copper “braid”. The copper braid electrical current carrying capacity shall be equal to the metal conduit.
    d. Provide a factory terminated ground clamp on each end of the braid with adjusting steel conduit grounding clamps and connect to each respective conduit end.
    e. The jumper braid length shall be 8-inches longer than the respective conduit fitting.

f. Bonding jumper for FMC and EMT fittings as manufactured by:

1) Emerson-OZ/Gedney – BJ and BJE Series
2) Appleton – BJ/XJ Series

H. Conduit Bodies Conduit Fitting

1. Conduit bodies shall provide conductor access with a removable conduit body cover and wiring area enclosed in metal housing. The conduit body shall facilitate pulling conductors.

2. In-line form “C” conduit bodies shall be prohibited.

3. The interior space “Length” of 90 degree “Elbow” conduit bodies shall not be less than six times the diameter size of the largest conduit connecting to the conduit body.

4. Conduit body covers shall be removable, gasketed; watertight “Domed” metal covers “Mogul-Type” with threaded screw attachment to the conduit body.

5. Lubricated, reusable, wire roller guards inside the conduit body shall protect wire from insulation damage during wire “Pulling”.

6. Conduit body fittings shall comply with UL 514.

7. Conduit bodies as manufactured by:

a. For RMC Conduit

1) Hubbell/Killark – LB/Mogul (90-degree elbow) Series – threaded body.
2) Emerson-OZ/Gedney - LB 6X/Mogul (90-degree elbow) Series - threaded body.
3) Appleton – NEC6X-LB/Mogul (90-degree elbow) Series - threaded body.

b. For EMT Conduit

1) Same as for RMC conduit. Provide EMT to RMC conduit combination coupling fitting for each outlet body connection.

2.2 PVC COATING

A. PVC Coatings shall be provided as described for specified metal products.

B. PVC Coating shall be factory applied, to comply with NEMA-RN1 and 5-19.

C. The adhesion of the PVC coating to the coated metal shall exceed the strength of the coating itself, based on 0.5-inch “Strip-Pull” test.

D. Uniform coating thickness shall be continuous without “Breaks” or “Pinholes” and shall not be less than the following:

1. Exterior metal surfaces, 40-millimeter coating thickness.

2. Interior metal surfaces, 10-millimeter PVC or urethane coating thickness (i.e., interior of conduits, interior of conduit fittings etc.).

2.3 CONDUIT SUPPORTS

A. General

1. Conduit Supports, hangers and fasteners for metal conduit shall be steel, hot dip zinc galvanized.

2. Conduit supports, hangers and fasteners for PVC coated conduit shall be PVC coated to match the conduit PVC coating.

3. Threaded hardware shall be continuous, free running threads.

4. Conduit support systems, including support channels, pipe clamps, braces, anchors, hardware, fasteners, shall be sized to support the full capacity circuit conductors' weight, plus the installed conduit weight, plus the conduit fitting weight and support hardware weight, plus a 300% additional weight capacity safety factor.

5. Provide lock washer at each "Bolted"/threaded connection.

6. Conduit supports, fasteners, channels, braces, hardware, anchors, pipe clamps, and hangers as manufactured by Unistrut or Kindorf.

7. Supports shall be free of "BURRS" and sharp edges.

8. Metal supports cut in the field shall be zinc galvanized after cutting to prevent rust.

B. Conduit Hangers

1. Threaded steel hanger rods.

   a. Hanger rods smaller than 0.375-inches in diameter shall not be used for support of individual conduits.
   b. Hanger rods smaller than 0.5-inches in diameter shall not be used for support of multiple conduits.

2. Conduit hanger wires shall be not less than 12-gauge steel.

3. Conduit hangers shall attach to structure fasteners with steel "Clevis" or "Swing" hangers and shall provide a minimum of 45 degrees of angular movement in any direction at the point of the conduit hanger attachment to the structure fasteners.

4. Conduits individually suspended by conduit hangers shall fasten to the respective hangers with "Clevis" type pipe hangers. The pipe hangers shall be steel, adjustable to fit conduit size and shall completely enclose the conduit circumference.

C. Conduit Support Channels

1. “C” channels shall be factory preformed with a minimum 12-gauge thickness metal. The channel shall be factory “Punched” with regularly spaced slotted holes for fastener attachments along the length of the channel.

2. The “C” channel shall not deflect more than 0.1-inch between channel supports at maximum installed design load, including required safety factor.

3. Channels shall comply with ANSI-1008 (latest revision) and ASTM-A569 latest revision).

4. Channels shall provide “Turned Lips” at longitudinal edges to hold (lock-in) fasteners.

5. Conduit support channels suspended from conduit hangers shall attach to conduit hangers with treaded connections. Provide a minimum of two hangers (trapeze style) connected to each channel.

6. Non-suspended conduit support channels shall connect to structure fasteners with threaded connectors.

D. Fasteners, Seismic Earthquake Rated

1. Channel fasteners:

   a. Channel fasteners shall “Pre-Locate” and lock into the channel “Turned Lips” and channel “Walls”.
   b. A separate metal strap shall “Tie” each conduit to each channel with conduit channel fasteners.

2. Structure fasteners:

   a. Structure fasteners for wall and floor mounted conduit attachments shall attach to existing masonry and concrete structures with structure fasteners using drilled, mechanical, expansion shield anchors.
   b. Structure fasteners for wall and floor mounted conduit attachments shall attach to new masonry and concrete structures with structure fasteners using steel threaded inserts precast into the structures.
   c. Structure fasteners shall center the support load above or below the beam flanges and reduce torsion-rotation forces exerted on the structural beam. Attach to steel structural members with “Swing-Beam Clamps”, with set-locking screw structure fasteners.

      1) Beam clamps shall include integral safety rod, strap or “J”-hook to secure the attachment clamp to the beam flanges on both sides of the beam, with integral hanger rod attachment.
      2) Or double-ended beam clamp to secure the attachment clamp to the beam flanges on both sides of the beam, with integral hanger rod attachment.

d. Structure fasteners for wall and floor mounted conduit attachments shall attach to wood structural members with flush “Through-Bolted” wood beam/wood framing stud structure fasteners.
e. Structure fasteners for wall mounted conduit attachments shall attach to steel framing studs and steel structural elements with spot welded steel structure fasteners or drilled and bolted structure fasteners.

E. Brace Connectors

1. Provide lateral brace connectors to resist horizontal, lateral and vertical movement of suspended conduits during seismic earthquakes.

2. The braces shall connect from each conduit support, attach as close to the conduit support as possible, and attach to fixed rigid, non-suspended building “Main” structural elements with fixed anchoring.

3. Brace attachment connectors and fasteners shall be rigid preformed steel channels or flexible #10-gauge steel hanger wire.

4. Connect and attach the brace connectors to fixed structural elements in the same manner as conduit support hangers. The connection of braces to structural elements shall be independent of the conduit support hanger structure fasteners.

2.4 ELECTRICAL POWER WIRE AND CABLE (600 VOLT AND BELOW)

A. General

1. All wire and cable shall be single-conductor, annealed copper, insulated 600-volt, #12AWG minimum unless specifically noted otherwise on the Drawings.

2. Conductors #10AWG and smaller shall be solid. Conductors #8AWG and larger shall be stranded.

3. Insulation of conductor connected to circuit protection devices required to be "100%" rated, shall be 90-degree centigrade rated insulation.

4. Insulation of conductors installed outdoors, on grade or underground, insulation shall be rated for wet locations.

5. Insulation of conductors installed outdoors, installed exposed to the sun, installed in exposed conduits, insulation shall be rated for high-temperature 90 degrees centigrade.

6. Insulation of branch circuit conductors installed internal of light fixtures; insulation shall be rated for not less than 90 degrees centigrade.

7. Conductor exposed to oil. The insulation and jacket shall be oil resistant, complying with “Oil Resistant-1” and “Oil Resistant-2” UL83.

B. Conductor Insulation

1. 600-volt AC and/or DC insulated conductors complying with UL83 installed entirely inside conduits, or enclosed inside wireways, or enclosed inside raceways, insulation shall be rated as follows.

   a. Indoor above Grade locations either concealed or exposed.

      1) Dual rated THHN and THWN
      2) Individually rated THHN-2
      3) Individually rated THWN-2
      4) XHHW-2

   b. Outdoor above Grade either concealed or exposed.

      1) XHHW-2
      2) THWN-2
      3) THW-2

   c. Outdoor below Grade or outdoor on Grade.

      1) XHHW-2
      2) THWN-2
      3) THW-2

   d. All other enclosed raceway locations not described above.

      1) XHHW-2
      2) THWN-2
      3) THW-2

2. 600-volt AC and/or DC insulated conductors installed in open cable tray or open wireway or exposed; insulation also shall be additionally rated for the specific exposed install locations.

C. Insulation Color Coding and Identification

1. The following color code for branch circuits:

   a. Neutral . . . White (Tape feeder neutrals with white tape near connections)
   b. Normal Power

120/208 Volt	480/277 Volt
Ground Green	Ground Green
Phase A Black	Phase A Brown
Phase B Red	Phase B Orange
Phase C Blue	Phase C Yellow

   c. Isolated ground insulation shall be green with a longitudinal yellow stripe.
   d. Emergency power same insulation color as normal power except as follows:
      120/208 Volt
      Provide an additional continuous stripe on each conductor insulation, orange or yellow, except ground

480/277 Volt
Provide an additional continuous stripe on each conductor insulation blue or black, except ground

2. When individual neutral conductors are shown/required for each branch circuit, the color code for the neutral conductors shall be as follows:

   a. 120/208 volt; Phase A - White with Black stripe; Phase B - White with Red stripe; Phase C - White with Blue stripe.
   b. 277/480 volt; Phase A - White with Brown stripe; Phase B - White with Orange stripe; Phase C - White with Yellow stripe.

3. Feeders identified as to phase or leg in each, switchboard, switchgear, panelboard, junction and termination location with printed identifying tape/ tags.

4. Fire alarm conductors: Use 600-volt, type THHN-2/THWN-2 conductors and color-coded per Equipment Manufacturer's recommendations and approved and listed for use on fire alarm systems by the State Fire Marshal and AHJ.

5. Color coding for HVAC mechanical and plumbing control wiring shall be an agreed upon color code between the Mechanical/Plumbing Contractor and the Electrical Contractor, and color code shall be submitted to the Owner’s Representative in writing for approval prior to installation.

D. Equipment Feeders, Copper or Aluminum:

1. Wire size shown on the Drawings is for copper conductors, unless specifically indicated otherwise.

2. If aluminum wire is proposed, increase aluminum wire size to ampere capacity of copper wire and voltage drop, not to exceed that of copper feeders indicated on Drawings. Increase conduit size and quantity as required by Code. Provide feeder calculation sheet, eight copies, if aluminum wire is proposed, showing feeder number, length, size and voltage drop in percentage for original copper feeders and for equal aluminum feeders.

3. Aluminum Conductors (600-volt or Less Only): Contractor has the option of using aluminum conductors in lieu of copper conductors for feeders only to panels, distribution boards/panels, switchboards, switchgear, trans-formers, motor control centers, and dimmer switchboard.

4. Aluminum Conductors shall be Aluminum Association AA-8000 Series Alloy, compact-stranded, with the same insulation as called for under copper conductors.

   a. Aluminum conductor larger than 750 MCM shall not be used.
   b. Aluminum conductors smaller than #2AWG shall not be used.

5. If the conductor termination is to be made on a bus bar or similar flat surface, a Burndy Type YA-A HYPLUG compression terminal intended for the specific conductor size, factory filled with oxide inhibitor compound shall be used. Terminal must be installed using a hydraulic compression tool equipment with a

die head for the particular terminal used. Only Burndy Hypress tools shall be used for compression.

a. Typical for existing aluminum conductors identified on Drawings for in-place reuse.
b. Typical for new aluminum conductors.

6. If the conductor termination is to be made into a circuit breaker or similar insert compartment it shall be terminated by use of a Burndy AYP HYPLUG compression connector intended for the specific conductor size, factory filled with oxide inhibitor compound. Connector must be installed using only Burndy Hydraulic compression tool specifically approved for each respective connector.

   a. When an aluminum lug is terminated to a copper or aluminum bus with a steel, aluminum or copper stud or bolt, place aluminum lug on stud or bolt followed by a flat steel washer, a Belleville washer, and steel or copper nut, in that order.

7. Connector aid shall be used for all aluminum conductor terminations, slices and connections. Connector aid shall be Burndy Pentrox A, NO-OX-1D Grade “A”.

2.5 MC CABLE

A. General

1. Metal clads electrical cable type “MC”, UL listed and labeled; low smoke per IEEE-FT4 1212 procedure and UL-1685 and 1569. Fire stop penetration rated. Rated for installation in environmental air plenums.

2. The cable assembly shall be rated for continuous full load operation in ambient temperatures as follows:

   a. Dry locations 90 degrees centigrade.
   b. Wet locations 75 degrees centigrade.

3. The type of MC cable, MC Fittings and supports shall be suitable for the conditions of use and the conditions of location of installation, based on the Manufacturer’s recommendations and based on applicable Codes.

4. Provide MC Terminations with MC cable bushings, rated “Anti-Short”.

5. Health Care facilities MC cable shall be rated for Hospital-Grade, with two individual, separate internal dedicated ground/bond conductors.

B. Conductors

1. Wire conductors shall be 600-volt 60Hz AC thermoplastic insulated, wire conductor.

   a. Wire sizes smaller than #8AWG shall be solid conductors. Wire sizes #8AWG and larger shall be stranded conductors.

b. Copper conductor - soft annealed copper, ASTM-B3 or B8. Minimum wire conductor size shall not be less than #12AWG. Aluminum conduct MC cable shall not be permitted.

2. 600-volt color-coded insulation phase wire conductors.

3. 600-volt white insulation neutral wire conductor. Provide a separate independent neutral wire conductor for each MC cable branch circuit phase conductor, shared neutral conductor shall not be permitted on multi-wire branch circuits contained within the same common MC cable.

4. 600-volt green insulation ground wire conductor. A second redundant, independent ground conductor shall be provided inside the MC cable. The ground conductors shall be bare or insulated conductor wire, type and size to match the main ground conductor.

5. A 100% coverage internal jacket binder tape shall enclose all conductors, located directly under the jacket armor. The binder tape shall provide isolation of “Movement” (reduce friction contact) between the conductors and the metal jacket.

6. The insulation of each wire conductor shall be individually 100% enclosed in a continuous tape. The tape shall provide isolation of “Movement” (reduce friction contact) between individual conductors’ insulation and between conductor insulation and the internal jacket tape.

C. Jacket

1. Interlocking spiral winding flexible metal armor shall be galvanized steel armor jacket. The armor jacket shall 100% enclose the insulated wire conductors inside the armor jacket. Aluminum jacket shall not be permitted.

2. PVC overall cable jacket for wet locations:

a. A continuous Polyvinyl Chloride (PVC) flexible jacket shall be applied over the armor jacket 100% enclosing coverage.
b. The PVC jacket shall be impervious to water infiltration, free of cracks and “Pin-Holes”.
c. The PVC jacket shall be provided on MC locations as described in the Contract Documents.

3. The interior surfaces of fittings shall be continuous and smooth, with a constant interior diameter. Fittings shall provide fully enclosed circular cross section. The interior surfaces of fittings shall be without ridges, burrs irregularities or obstructions. Fittings of the same type shall be of the same uniform weight and thickness.

4. Protective corrosion resistant finish for MC fittings fabricated from steel shall be as follows:

a. Clean all metal surfaces (including metal threads) with acid bath “Pickle” prior to coating, to remove dirt, oil and prepare surfaces for galvanizing.

b. Hot-dip galvanized zinc coating on all interior and exterior steel surfaces. Minimum finish zinc coating thickness shall not be less than 0.002-inch.
c. Threads shall be hot-dip zinc coated after machine fabrication.
d. Exterior metal surfaces shall be finished with clear organic polymer topcoat layer, after galvanizing.
e. The inner metal surfaces shall be finished with a lubricating topcoat after galvanizing, to facilitate conductor pulling through the fitting.

5. Threads for MC cable fittings shall be taper-pipe-thread, National Pipe Standards (NPS) and shall comply with ANSI-B1.20.1.

6. Terminal connector fittings shall be provided with a Manufacturer installed, insulating throat bushing inside the fitting. The bushing shall protect the wire conductor insulation from cutting, nicks, and abrasion during conductor installation and electrical load “Cycling” after installation is complete. The bushing shall comply with UL 94V-0 flammability. The bushing shall be visible and provide physical isolation between the jacket metal armor and the internal conductor insulation.

7. Fittings connecting to MC cable with PVC jacket coating shall be PVC coating to match the cable.

PART 3 - EXECUTION

3.1 TRENCHING, FOOTINGS, SLEEVES

A. General

1. Provide excavation and trenching, concrete encasement of conduits, trench backfilling, and compaction for the underground electrical work.

2. Provide concrete footings and concrete reinforcement for all post and/or pole-mounted lighting fixtures.

3. Joists, girders, beams, columns or reinforcing steel shall not be cut or weakened. Where construction necessitates the routing of conduit or raceways through structural members, framing or footings, written permission to make such installation shall first be obtained from the Owner’s Representative. Such permission will not be granted, however, if any other method of installation is possible.

B. Sleeves

1. Provide sleeves for raceways, conduit and wire/cables passing through the following construction elements:

a. Concrete and masonry foundations, floors, walls and slabs.
b. Gypsum, Lath, and plaster walls and ceilings.
c. Building structures (i.e., foundations, walls, floors, ceilings, beams, and roofs) with a fire rating exceeding 20-minutes.

2. Sleeves shall extend 1.5-inch above and below floors, except under floor standing electrical equipment. Sleeves shall be flush with wall ceiling foundations and partitions exposed to public view and extend approximately 0.5-inch past penetration in fire rated construction. Sleeves shall be installed at exact penetration locations and angles to accommodate wire/cable, race-way and conduit routings.

3. The layout and design of raceways and conduits located in or routed through masonry or reinforced beams or the Owner's Representative shall review walls before any work is performed. All sleeving shall be accomplished according to the instructions of the Owner's Representative and shall be accepted before any concrete is poured.

4. Sleeves, raceways and conduit shall be located to clear steel reinforcing bars in beams. Reinforcing bars in walls shall be offset to clear piping and sleeves.

5. Provide a continuous clearance between the inside of a sleeve and exterior of wire/cables, conduits and raceways passing through the sleeve not less than the following:

    a. 0.5-inch clearance except as required otherwise.
    b. 1.0-inch clearance through outside walls below grade.
    c. 3.0-inch clearance through seismic joints.

6. Sleeves set in fire rated construction shall be caulked between sleeves and building structure, additionally sleeves shall be caulked between the sleeve and the wire/cables, conduits/raceways passing through the sleeve. The caulking shall be a fireproof sealant, equal to the fire rating and temperature being penetrated. Clearance between components inside of sleeve and exterior of components passing through sleeve and between components inside the sleeve shall comply with Fireproof Sealant Manufacturer's recommendations.

7. Sleeve material:

    a. In floor construction: Schedule 40 black steel pipe, with upper surface to be sealed watertight.
    b. In concrete or masonry walls roofs or ceilings: Schedule 40 black steel pipe. When installed in roofs or outside walls, seal outer surface watertight.
    c. In fire rated construction; 24-gauge galvanized iron or steel.
    d. Sleeves through waterproof membranes: Cast iron or Schedule 40 steel with flashing clamp device and corrosion resistant clamping bolts. Caulk space between pipe and sleeve and surfaces between sleeve and conduits sealed watertight.

3.2 GROUNDING AND BONDING

A. General

1. Grounding and Bonding shall be executed in accordance with all applicable Codes and Regulations, both State and Local Authorities Having Jurisdiction (AHJ).

2. Where nonmetallic conduit is used in the distribution system, the Contractor shall install the proper sized copper ground wire in the conduit with the feeder for use as an equipment ground. The electrical metallic raceway system shall be grounded to this ground wire.

3. The maximum ground/bond resistance to the grounding electrode shall not exceed 1-ohms from any location in the electrical system. The maximum ground resistance of the grounding electrode to earth shall not exceed 5-ohms.

B. Ground/Bond Conductors

1. Provide an additional, dedicated, green insulation equipment ground/bond wire inside each conduit type and raceway as follows. Size the ground/ bond conductors to comply with CEC/NEC Requirements. The metal conduit or raceway shall not be permitted to serve (function) as the only (exclusive) electrical ground return path:

   a. All types of nonmetallic conduit and all types of non-metallic raceways including but not limited to: RNMC - Rigid Nonmetallic Conduit.
   b. FMC - Flexible Metal Conduit.
   c. LTFMC - Liquid Tight Flexible Metal Conduit.
   d. Metal and non-metal raceways.
   e. RMC - Rigid Metal Conduit.
   f. EMT - Electrical Metal Tubing.

2. The equipment ground/bond wire shall be continuous from the electrical circuit source point of origin to the electrical circuit end termination utilization point as follows:

   a. Every conduit and raceway path containing any length of the above identified conduits or raceway.
   b. Every conduit path and raceway path connected to any length of the above-identified conduits and raceways.

3. The equipment ground/bond wire shall be sized as follows, but in no case smaller than indicated on the Drawings. Install equipment ground/bond wire in each conduit/raceway, with the respective phase conductors:

   a.

Feeder, Sub-feeders and Branch Circuit Protection	Minimum Equipment Ground Copper Wire Size
15 amp	#12
20 amp	#12
0 to 60 amp	#10
70 to 100 amp	#8
101 to 200 amp	#6
201 to 400 amp	#2
401 to 600 amp	#1
801 to 1000 amp	2/0
1001 to 1200 amp	3/0
1201 to 1600 amp	4/0
1601 to 2000 amp	250 MCM

2001 to 2500 amp	350 MCM
2501 to 4000 amp	500 MCM
4001 to 6000 amp	800 MCM

4. Isolated grounds - Raceways containing branch circuit or feeder-phase conductors connected to panelboards equipment, or receptacles with isolated grounds or isolated ground bus shall contain an additional dedicated insulated ground conductor connected to the isolated ground system only. The isolated ground conductor shall be continuous the length of the raceways and connected only to the isolated ground terminals in addition to and independent of the equipment bonding/ground conductor. The isolated ground conductor shall be sized as indicated above, for equipment ground/bond wire.

5. Splices in ground/bond wires shall be permitted only at the following locations:

   a. Ground buses with listed and approved ground lugs.
   b. Where exothermic welded ground/bond wire splices and/or terminations are provided.

6. Provide ground/bond wire jumpers for conduit fittings with ground lugs, expansion and deflection conduit fittings at conduit fittings connecting between metallic and non-metallic raceways and to bond metal enclosures to conduit fittings with ground lugs.

7. Where conductors are run in parallel in multiple raceways, the grounding conductor shall be run in parallel. Each parallel equipment-grounding conductor shall be sized based on the ampere rating of the overcurrent device protecting the circuit conductors in the raceway. When conductors are adjusted in size to compensate for voltage drop, grounding conductors, where required, shall be adjusted proportionately in size.

8. Ground conductors for branch circuit wiring shall be attached at each outlet to the back of the box using drilled and tapped holes and washer head screws, 6-32 or larger.

9. Each motor control, electrical panel, panelboard, switchboard, switchgear, pull box or any other enclosure in which more than two ground wires are terminated shall be equipped with a ground bus secured to the interior of the enclosure. The bus shall have a separate lug for each ground conductor. No more than one conductor shall be installed per lug.

C. UFER Ground

1. In addition to all cold-water metal pipe and structural steel grounds provided to meet this Specification, there shall be a main ground system of the UFER ground style.

2. The UFER ground electrodes shall be a minimum of two 20-feet lengths of #4/0 AWG bare stranded copper cable embedded horizontally in the cast in place concrete footing, extending in opposite directions in the footings. All portions of

the ground electrodes shall be placed inside the concrete, between 2-inches and 4-inches from the earth surrounding the concrete.

3. The lengths of cable shall extend in opposite directions in the footings, with the center end of each cable terminated onto the main electrical service ground bus for the main electrical service equipment.

    a. Typical in each separate building.
    b. Typical for each main electrical service equipment location.

4. All wire cable connection terminations onto the ground bus shall be exothermic weld type.

5. The “UFER” grounding electrode, embedded in concrete, shall be exothermically welded to each steel reinforcing bar (rebar) and each steel anchor bolt located within 18-inches of the grounding electrode inside the concrete. Note: Reinforcing steel (rebar), in concrete foundations, attached with metal “Tie-Wraps” and in direct physical contact to other adjacent rebar that is in turn exothermic welded to the UFER grounding electrode, may be classified as attached to the UFER grounding electrode, and does not require additional exothermic weld connections to the UFER grounding electrode.

D. Additional Ground/Bond Connects

1. Provide a separate ground/bond insulated grounding electrode conductor, copper wire from the main electrical service ground bus homerun to each of the following locations. Exothermic weld connects or UL listed and approved compression ground/bond fittings/couplers. The ground/bond conductor shall be sized to comply with applicable Codes and as indicated on the Drawings, but in no case smaller than the following:

    a. Main service entrance equipment ground bus:

        1) Services smaller than 1200 amp 1.5-inch conduit with 1#4/0.
        2) Services 1200 amp and larger 2.5-inches conduit with 1#500 MCM.
        3) Where a separate ground bus is not required, connect ground to electrical equipment metal housing

    b. Each telephone backboard and signal system backboard location, each IDF and MDF, 1.25-inch conduit with 1#1.
    c. Metal cold water pipe located inside the building, 1.5-inch conduit with 1#4/0.
    d. Outdoor underground metal cold water pipe, make connection five feet from the building, 1.5-inch conduit with 1#4/0.
    e. Each transformer (size equipment ground conductor as indicated and to comply with applicable Codes).
    f. Each service entrance ground bus and each separately derived ground rod system:

        1) Services smaller than 1200-amp 1.5-inch conduit with 1#4/0.
        2) Services 1200 amp and larger 2.5-inch conduit with 1#500MCM.

g. Separate 1.25-inch conduit with 1#2(AWG) bonding conductor to each interior metal pipe system located in the same building, including but not limited to, the following:

1) Fire sprinkler system each stand-pipe location (water based and non-water-based).
2) HVAC chilled water supply and return, at each pump location.
3) Metal roof drains and down-spouts.
4) Waste liquid disposal systems.
5) Metal gas pipe service entrance and service meters.
6) Hydraulic elevator main hydraulic lift-piston housing pipes for each hydraulic elevator.

h. Each Inverter Unit and each Uninterruptable Power Supply – UPS (size equipment bonding conductor and neutral ground conductor as indicated and to comply with applicable Codes).

3.3 CONDUIT

A. General

1. The sizes of the conduits for the various circuits shall be as indicated on the Drawings, but not less than the conduit size required by Code for the size and quantity of conductors to be installed in the conduit.

2. Conduits shall be installed concealed from view. Install conduits concealed in walls, concealed below floors and concealed above ceilings, except as specifically noted otherwise.

   a. Conduits shall not be installed in concrete floors.

3. The following systems shall be considered as circuits 100 volts and less, all other circuits shall be considered to be over 100 volts (power circuits) unless specifically noted otherwise: Fire alarm, energy management control, telephone, public address, data, computer, television, intercom, intrusion alarm and nurse call.

4. Conduits shall be provided complete with conduit bends, conduit fittings, outlet boxes, pullboxes, junction boxes, conduit anchors/supports, and grounding/bonding for a complete and operating conductor/wire raceway system.

5. Metal and nonmetal conduits shall be provided mechanically continuous between termination connection points. Metal conduit shall be provided electrically continuous between termination connection points.

6. Individual conduit paths and home runs shown on the Drawings shall be maintained as separate individual conduits for each homerun and path.

7. Conduits, conduit fittings and installation work occurring in classified hazardous materials locations shall comply with applicable Code Class 1 Division 1 Requirements, unless specifically noted otherwise.

8. Transitions between conduits constructed of different materials and occurring in above grade locations shall be allowed only at outlet boxes, junction boxes, pull boxes and equipment enclosures unless specifically indicated otherwise. Provide outlet boxes and junction boxes.

9. Metal conduit terminating to nonmetal enclosures; terminating into metal enclosures with “Concentric.Ring” knockouts; terminating into metal enclosures with knockout reducing washers, including but not limited to equipment housings, outlet boxes, junction boxes, pull boxes, cable trenches, manholes, shall be provided with a ground/bonding lug integrated with the conduit termination conductor fitting construction, by the Fitting Manufacturer. The lug shall provide for connection of a grounding/bonding conductor (insulated or uninsulated). The grounding lug shall be located on the fitting, inside the termination enclosure.

10. The type of conduit, type of conduit fittings, and type of conduit supports, and method of conduit installation shall be suitable for the conditions of use and conditions of location of installation based on the Manufacturer’s recommendations; based on the applicable Codes and based on the Requirements of the Contract Documents.

B. RMC Installation Locations
RGS, IMC conduits and RGS, IMC fittings shall be installed in the following locations:

1. Embedded in floors, walls, ceilings, roofs, foundations, and footings constructed with concrete.

2. Embedded in walls and foundations constructed with brick and masonry.

3. Interior of buildings, within 9-feet of finish floor lines for exposed conduit locations.

4. Exterior of building for exposed conduit locations.

5. Damp or wet locations exposed or concealed locations.

6. Exposed on roofs.

7. In hazardous materials areas and locations; below hazardous materials areas and locations; above hazardous materials areas and locations.

8. Exposed on utility service poles, for pole risers less than 9-feet above finish grade.

9. RMC conduit and RMC fittings may be installed in any location where EMT and FMC conduit is permitted to be installed.

C. PVC Coated RMC Installation Locations
PVC coated RMC conduit and PVC coated RMC fittings shall be installed in the following locations:

1. Underground conduit locations for elbows and bends with a radius of less than 36-times the conduit diameter.

2. Underground vertical risers extending above grade.

3. Entire length of underground conduits for the following circuits:

   a. Analog Audio microphones and analog video circuits.
   b. Analog Lighting dimming controls.

4. Installed in contact with earth or corrosive materials.

5. Exposed in “Cold” rooms and “Refrigerated” rooms, rooms with a maintained temperature below 65 degrees Fahrenheit.

6. Exposed conduit in exterior outdoor locations.

7. Exposed conduit in interior locations.

D. EMT Installation Locations
EMT conduit and EMT fittings may be installed in the following locations, for circuit conductors operating below 600 volts to ground; locations containing only “Non-Hazardous Materials”; only dry locations:

1. Concealed in hollow non masonry/non-concrete, metal stud frame and wood stud frame walls and floors.

2. Concealed above ceilings.

3. Exposed inside interior enclosed crawl spaces.

4. Exposed interior locations placed 9-feet or higher above finished floors (except as described in paragraph below at lower heights).

5. Exposed on walls and ceilings (any height) in the following dedicated function areas, interior enclosed room locations:

   a. Indoor enclosed electrical equipment rooms and closets.
   b. Indoor enclosed data and telecommunication terminal rooms and closets.
   c. Indoor enclosed HVAC equipment rooms and closets.

6. Any location where FMC is described to be installed, except as the final connection to rotating or vibrating equipment.

E. FMC Installation Locations
FMC conduit and FMC fittings may be installed in the following locations for circuit conductors operating below 600 volts to ground; locations containing only “Non-Hazardous Materials”; only dry, interior locations:

1. Concealed in hollow non-masonry metal stud frame and wood stud frame fully enclosed walls.

2. Concealed above fully enclosed ceiling spaces.

3. FMC conduit shall be installed in continuous lengths between termination points. FMC shall not be “Spliced” or coupled directly to FMC or any other conduit type under any circumstance.

4. The maximum continuous length of FMC that shall be installed between termination end points is 15-feet. Circuits requiring continuous conduit lengths exceeding 15-feet between termination end points shall be installed using either RMC or EMT conduits. FMC lengths shorter than 16-inches are prohibited.

5. The minimum size FMC conduit shall be as shown on the Drawings but not be less than the following:

    a. FMC lengths of 6-feet or less, minimum FMC conduit size shall be 0.50-inch.
    b. FMC lengths exceeding 6-feet, minimum FMC conduit size shall be 1.0-inch.

F. LTFMC Installation Locations
LTFMC conduit and LTFMC fittings shall be installed in the following locations for circuit conductors operating below 600 volts to ground; locations containing only “Non-Hazardous Materials”:

1. Final electrical connection to vibrating or rotating equipment; control and monitoring devices mounted on vibrating and rotating equipment including the following. Minimum conduit length shall not be less than 24-inches:

    a. Motor, engines, boilers, solenoids, and valves.
    b. Fixed mounted “Shop” (manufacturing) production equipment.
    c. Fixed mounted food preparation equipment and “Kitchen” equipment.

2. All locations where exposed flexible conduit connections are required, both indoor and outdoor.

3. Final connection to indoors electrical transformers. Minimum conduit length shall not be less than 24-inches; maximum conduit length shall not exceed 72-inches.

4. Do not install LTFMC located in environmental air plenums.

G. RNMC Installation Locations
RNMC conduit and RNMC fittings shall be installed in the following locations containing only “Non-Hazardous Material”:

1. Underground, concealed below earth grade, unless specifically noted or specified otherwise.

2. Exposed on utility service poles, for pole risers at 9-feet or higher above finish grade, Schedule 80 PVC only.

3. RNMC type “EB” conduit(s) shall be concrete encased along the entire length of the conduits for all installation locations.

4. Non-metal type raceways and RNMC type conduit shall not be installed inside buildings or exposed on buildings.

H. Combi-Duct Installation Locations:
Combi-duct conduits shall be installed where shown on the Drawings. Combi-duct shall be installed underground (below grade) as follows:

1. Do not install exposed or inside buildings above grade.

2. Provide a 0.25-inch pull rope in each inner duct.

3. Radius and elbows shall be rigid non-metallic, PVC, Manufacturer factory fabricated, in lieu of PVC coated RMC conduit.

4. Inner ducts shall be supported by internal spacers inside the enclosing outer duct.

5. Provide end bell and three hole "Snug-Plugs" at each entrance end of Combi-duct into pullboxes, manholes, equipment cabinets stub-ups and Combi-duct terminations. Compression type “Snug-Plugs” shall provide watertight and airtight seal between inner and outer ducts and around future cables installed in inner duct.

I. Conduit Installation

1. Conduit Supports

a. Securely and rigidly support all raceways/conduits from the building structure. Raceways/Conduits shall be supported independent of all piping, air ducts, equipment ceiling hanger wires, and suspended ceiling grid systems. Secure conduit to structural element by means of UL listed and approved hangers, fasteners, “C” channels and pipe clamps.
b. Provide conduit supports spaced along the length of the conduit as follows:

1) RMC and EMT conduit, maximum not to exceed 96-inches on center; within 24-inches of each conduit bend and conduit termination location.
2) FMC and LTFMC conduit, maximum not to exceed 24-inches on center; within 6-inches of each conduit bend and conduit termination location.

c. Suspended conduit methods:

1) Individual, suspended raceways/conduits separated by more than 12-inches from any other conduit and suspended from ceilings and roofs shall be supported as follows:

a) Conduits smaller than 1.5-inch by means of hanger rods or hanger wires.
b) Conduits 1.5-inch and larger by means of hanger rods.
c) The conduit shall attach to the hangers with pipe clamps.
d) Hanger wire, not less than #12AWG steel; hanger rods, threaded, not less than 0.375-inch diameter steel.

2) Suspended raceways/conduits positioned within 24-inches of any other conduit shall be grouped and supported by hanger rods using trapeze

type conduit support channels ("C" channels). Conduits shall individually attach to common channels side-by-side, with pipe clamps.

d. Non-suspended conduit methods:

1) Individual raceway/conduits placed against wall/ceiling/ floors, placed inside hollow wall/ ceiling construction or structure framing (i.e., “Dry-Wall” or plaster hollow wall construction), shall be secured by means of individual pipe clamps and fasteners attached to the framing studs or other structural members and the conduit/raceway.
2) Provide common “C" channel supports for all multiple raceway/conduits placed against vertical or horizontal surfaces and positioned within 24-inches of other raceways/conduits. Attach channels to the framing studs or other structural members. Attach the conduits/raceway individually to common channels, side-by-side, with pipe clamps.
3) The use of toggle bolts is prohibited.

e. Conduit rising from floor for motor connection shall be independently supported if extending over 18-inches above floor. Support shall not be to a motor or ductwork, which may transmit vibrations.
f. Provide conduit anchoring, conduit support and conduit bracing systems conforming to Earthquake Seismic Requirements at each install location. The conduit support/anchoring system capacity shall include the weight of the conduits, conduit fittings, conduit supports, and conductors/wires/cables installed in the conduits plus a 300% safety factor. Submit Shop-Drawing details showing each typical conduit anchor, conduit support and conduit brace location. Submit structural calculations performed by and signed by a Professional Structural Engineer (P.E.) with a P.E. license, registered in the State of California, U.S.A.

2. Conduit Separation:

a. Conduit installed underground or below building slab without full concrete encasement: Shall be separated from adjacent conduits of identical systems (i.e., signal to signal, data to data, power to power, control to control etc.) by a minimum of 3-inches. Conduits of non-identical systems (i.e., signal to power; data to power; power to control; signal to control, etc.) shall be separated by a minimum of 12-inches.
b. Conduit installed underground with full concrete encasement; shall be separated from adjacent conduits of similar systems (100 volt and less) by a minimum of 2-inches; conduits for non-power systems (100 volt and less to ground) shall be separated by a minimum of 6-inches from power circuits (over 100-volt to ground); conduits for power circuits shall be separated from adjacent conduits of similar power systems (over 100-volt to ground) by a minimum of 3-inches.
c. Separation of conduits entering termination points or crossing other conduits may be reduced as required within 60-inches of the termination or crossing points.
d. Conduits containing Utility Company service circuits (i.e., electrical power, telephone, or cable television) shall be separated a minimum of 12-inches from all other utilities and conduits, with or without concrete encasement,

metallic or non-metallic conduit, above grade or underground conduit locations.

e. Conduits shall be separated from hot water piping, exhaust flues/ chimneys, steam piping, boilers, furnaces, ovens by a minimum of 18-inches.

3. Conduit Stubs:

   a. Branch circuit and telephone conduits turned up from floor at the following locations shall terminate each conduit in a flush conduit coupling at the floor and then extend into partition or to equipment. Refer to Owner's Representative's Drawings for location of walls and partitions.

      1) Interior demountable partitions.
      2) Below, into or adjacent to equipment not installed directly adjoining to a wall.
      3) Up from below the floor into hollow stud frame walls.

   b. From each panel, and signal cabinet which is wall mounted, stub up from top of the panel/cabinet a minimum of three 1-inch conduits to the nearest accessible ceiling spaces or other accessible location. Where the floor below the panel is accessible or is a ceiling space, stub an additional three 1-inch conduits from the bottom of the panel into the accessible space below the panel. Cap conduits for future use.
   c. Conduits stubbed underground outside of building line for future use shall be terminated a minimum of 5-feet clear (whichever distance is greater) of building or adjacent concrete walks and AC paving. The stub-out conduit shall be capped. Provide concrete monuments, 6-inches by 6-inches by 15-inches deep, buried flush with grade over the capped ends. The face of monument shall be furnished with 3-inches square brass plates securely mounted and engraved with the number and size of conduits and type of service (i.e., "POWER", "TEL.", etc.).
   d. Conduits stubbed into ceiling or floor spaces from outlets for telephone, video, computer/data or television shall be provided with an insulated throat bushing, on the end of each conduit stubout.
   e. Conduit stubouts from outlet boxes and equipment located in hollow stud walls, into ceiling and floor spaces, shall be EMT or RMC conduit. The stubouts shall terminate into the ceiling and floor spaces with a conduit termination connector fitting.
   f. Empty conduit stubs into building spaces and equipment shall be individually identified with an "ID-Tag" located at each end of the conduit. The ID-tag shall state the origination point and termination point of the respective conduit (i.e., "from PNL-A/to Room #121"; "from outlet #24/to outlet #17 in Room #120"; etc.).
   g. Provide a conduit termination fitting with insulated throat bushing and mechanical ground lugs at each conduit "Stub-Up" location.

4. Conduit concrete encasement:

   a. Conduits which are run underground exterior to building slab shall be continuously concrete encased, except 15-, 20- and 30-amp power branch circuit conduits underground do not require concrete encasement.

b. PVC rigid-non-metallic-type EB conduit, of any size and any location shall be continuously concrete encased the full length of the conduit installation, including under building slab.
c. Concrete for encasement of underground conduits shall be 2000-PSI 28-days cure strength with a mix of cement, sand, water and maximum of ¾-inch gravel. Concrete encasement of conduits shall be continuous without voids. The encasement shall extend 3-inches past the edges of all conduits on all sides of the circuit. Provide ten pounds of red oxide cement coloring uniformly mixed with each cubic yard of concrete for conduit encasement.
d. Conduits located below or adjacent to structural foundations shall be separated from the foundation by a minimum of 12-inches. Conduits located below structural foundations shall be fully and continuously concrete backfilled and encased between the bottom of the foundation to the bottom of the conduits. The concrete shall be 4000-PSI 28-day cure strength instead of 2000-PSI concrete.
e. Conduits of any size and type (including 15-amp and 20-amp power branch circuits) located under roads, paved areas and “Transit-System” right of way shall be concrete encased.

5. Underground conduits:

a. Three or more underground conduits occupying the same trench shall be separated and supported on factory fabricated, non-metallic, duct/ conduit support spacers. The spacers shall be modular, keyed inter-locking type, "Built-Up" to accommodate quantity, size orientation and spacing of installed conduits. The spacers shall maintain a constant distance between adjacent conduit supports and hold conduits in place during trench backfill operations. Minimum support spacer installation interval along with length of the conduits shall be as follows:

1) Concrete encased conduits, not less than 8-feet on center.
2) Non-concrete encased conduits, not less than 5-feet on center.

b. Provide trenching, excavation, shoring and Backfilling required for the proper installation of underground conduits. Tops of backfill shall match finish grade.
c. Bottoms of trenches shall be cut parallel to “Finish Grade” elevation. Make trenches 12-inches wider than the greatest diameter of the conduit.
d. Back-filling Trenches for Conduits without Concrete Encasement Requirements

1) Conduits which are not required by the Contract Documents to be concrete encased and are located exterior to building slab, shall be set on a 3-inch bed of damp clean sand. Conduit trenches shall be backfilled to within 12-inches of finished grade with damp sand after installation of conduit is completed. Remainder of backfill shall be native soil.
2) Conduits located under a building which are not required by the Contract Documents to be concrete encased, shall be completely backfilled and compacted with clean damp sand to the same level as the building foundation pad.

3) Provide a continuous yellow 12-inches wide flat plastic tracer tape, located 12-inches above the conduits in the trench. The tracer tape shall be imprinted with “Warning-Electric Circuits” a minimum of 24-inches on center.

e. Backfilling trenches for conduits under paved areas:

1) In addition to the Requirements of conduit concrete encasement; conduits under walkways, roads, parking lots, driveways, and buildings shall be cast in place concrete “Slurry Mix” backfill. The slurry mix shall cover each side and top of conduits and conduit concrete encasement. The slurry mix shall be continuous to the underside of the finish subgrade surface.

f. Backfilling trenches for conduits with Concrete Encasement Requirements by the Contract Documents:

1) Trenches with all conduits concrete encased shall be backfilled with clean damp sand when located under building pads.
2) Trenches with all conduits concrete completely (sides, top, and bottom) encased and not located under a building pad and not located under paved areas, shall be backfilled with clean damp sand or native soil.
3) Concrete mix, consisting of cast-in-place concrete, sand, and gravel. 2000 psi compressive 28-day cure strength. Red-dye concrete coloring. See additional Requirements.

g. Backfill material:

1) Sand backfill shall be clean with no clay or organic materials, free of State of California and EPA defined toxic constituents, total chloride content less than 500ppm, total sulfate content less than 150ppm, sand pH greater than 4.5 and less than 9.0. Sand and native soil backfill of trenches shall be machine vibrated in 6-inch lifts to provide not less than 90% compaction of backfill.
2) Native soil backfill shall have no gravel or stones, and no organic matter of aggregate greater than 1-inches.
3) Concrete mix and slurry mix backfill shall be machine vibrated during installation to remove “Air-Voids”.
4) The slurry mix shall consist of concrete, clean gravel, clean sand and clean water mixture, 1000psi compressive 28-day cure strength. Maximum shrinking of slurry mix shall not exceed 5% wet to dry.

h. Do not backfill until Owner’s Representative has approved Installation and As-Built Drawings are up to date. Promptly install conduits after excavation has been done, to keep the excavations open as short a time as possible. Excess soil from trenching shall be removed from the site.

i. Installation depth below finish grade of underground conduits and underground raceways. In no condition/location less than 12-inches below winter underground frost-line. Underground depth dimensions shall be measured from finish top of grade elevation to top of all underground conduits/raceways, typical except under buildings.

1) Under non-traffic areas not covered with paving or concrete, not less than 24-inches underground.
2) Under traffic areas including roads and parking areas, not less than 36-inches underground.
3) Under public/private transit system right-of-way and rail-road right-of-way, not less than 48-inches under-ground.

j. Conduit crossing existing underground utilities shall cross below the bottom depth of the existing utilities. If the top portion of the existing utility depth below finish grade exceeds 72-inches and the specified separation and depths are maintained when crossing over the top of the existing underground utility, the conduit may cross above the existing underground utility.
k. Provide long radius horizontal bends (minimum radius of 36-times the conduit diameter) in underground conduits where the conduit is in excess of 100-feet long.
l. Conduits installed below grade and on grade below buildings, shall not be smaller than 0.75-inch. Conduits for circuits exceeding 600 volts shall not be smaller than 5.0-inches.
m. Underground conduits entering a building shall be sloped. The conduit direction of slope shall be away from the building and shall prevent water in the conduit from “Gravity Draining” towards the building. The conduit slope “High Point” shall originate from the building, out to the first exterior pullbox, manhole etc. exterior conduit termination “Low Point”. The minimum slope angle shall be a constant 8-inches (or greater) of fall for each 100-feet of conduit length.
n. Dewatering:

1) Provide pumping to remove, maintain and dispose of all water entering the excavation during the time the excavation is being prepared, for the conduit laying, during the laying of the conduit, and until the backfill at the conduit zone has been completed. These provisions shall apply on a continuous basis. Water shall be disposed of in a manner to prevent damage to adjacent property. Trench water shall not be drained through the construction site. Groundwater shall not be allowed to rise around the pipe until joining compound has firmly set.
2) The Owner’s Representative shall be notified 48 hours prior to commencement of dewatering.

6. Raceway/Conduits, which are installed at this time and left empty for future use, shall have 0.25-inch diameter polyvinyl rope left in place for future use. The pull rope shall be 500-pounds minimum tensile strength. Provide a minimum of 5-feet of slack at each end of pull ropes.

7. Unless otherwise restricted by Structural Drawings and Specifications, the maximum size conduit permitted in concrete slab on-grade, walls, ceilings and roofs constructed of masonry or concrete shall not be greater than 15% of the concrete/masonry thickness. Conduits installed in these locations shall not cross other conduits.

a. Conduits shall not be installed in cast-in-place concrete floors.

8. Provide openings in building structures for conduit penetrations:

    a. New construction shall be provided with conduit sleeves, to provide conduit penetrations.
    b. Existing construction shall be drilled (core drill masonry and concrete) and provide conduit sleeves installed after drilling, to provide conduit penetrations.
    c. Where the structure penetrations for underground conduits penetrating through foundations will not comply with the (restriction/penetration) shown in the Contract Documents, install the conduits below and clear of the foundation lowest point.

9. Conduit bends risers and offsets:

    a. The minimum bend radius of “Factory or Field” fabricated conduit bends shall not be less than the following. The bend radius shall be measured at the surface, inside radius of the conduit wall:

        1) FMC and LTFMC conduit - conduit minimum bend radius 12-times the conduit diameter.
        2) RMC and EMT conduit minimum bend radius - conduit for power circuits over 100-volts and less than 600-volts, 8-times conduit diameter. Conduit for power circuits over 600-volt, 12-times conduit diameter. Conduit for low voltage, signal and fiber optic circuits, 10-times conduit diameter.
        3) RNMC conduit - conduit minimum bend radius 36-times the conduit diameter. Under building reduce minimum bend radius to 10-times the conduit diameter. Conduit bends and offsets in RNMC with less than 36-times conduit diameter bend/offset radius shall be RNMC PVC Schedule 80 or PVC coated RGS.
        4) Conduits for Utility Company conductors. Conduit minimum bend radius and separations shall comply with the respective Utility Company Requirements.

    b. Bends and offsets in conduits shall be kept to an absolute minimum. The total summation of all bends and offsets permitted in a conduit segment, occurring between two conduit termination/ connection end points, shall not exceed the following, including conduit fittings:

        1) RMC and EMT conduit - 360 angular degrees
        2) FMC and LTFMC conduit - 180 angular degrees
        3) RNMC conduit - 270 angular degrees

    c. Each field fabricated conduit offset, bend and elbow which are not the standard product of the Raceway/Conduit Manufacturer shall be mandrel tested. The test shall be conducted after the conduit installation is complete and prior to pulling-in any wire, in the same manner as for underground conduits.
    d. Factory manufactured angle connector conduit fittings shall be installed in exposed conduit locations only. Installation in locations normally concealed from view shall not be permitted. Not more than one factory manufactured

angle connector shall be permitted in any length of conduit between conduit termination end points.

e. RNMC conduit risers from below grade shall be PVC coated RGS. Conduit risers, bends or offsets entering into a building shall be PVC coated RGS.

f. If three or more conduit-bends of the same conduit size and same conduit material type, installed, as part of the Contract Work, fail to comply with the required minimum conduit bend radius or conduit angular degree limits. The following corrective actions shall occur:

1) The Contractor shall remove all the non-complying conduit bends and the respective wire in the conduit from the project site. Provide new conduit and wire, complying with the Contract Documents.
2) Where the conduit bends similar to the non-complying conduit bends are installed concealed in walls, floors, above ceilings or below grade, the Contractor shall expose the conduit bends to allow visual observation.
3) The Contractor shall remove the non-complying conduit bends and dispose of the Project Site. The Contractor shall provide new conduit bends and conductors complying with the Contract Documents.
4) All the costs to correct the deficient material and work along with costs to repair the direct, indirect, incidental damages and Contract delays shall be the sole responsibility of the Contractor and shall be included in the bid price.

10. Expansion joint, deflection joint and seismic joint fittings.

a. Provide a conduit expansion fitting for each conduit length and conduit type as follows (Note - The installation of specified combination expansion /deflection fittings at seismic joints shall satisfy this Spacing Requirement also):

1) Conduit Type: RMC and EMT
Conduit: Exposed exterior locations
Fitting Length Spacing: 200-feet intervals

2) Conduit Type: RMC and EMT
Conduit: Interior weather protected locations
Fitting Length Spacing: 400-feet intervals

b. Provide a conduit combination expansion/deflection fitting for each conduit, crossing the following elements:

1) At each building or non-building structure seismic joint.
2) At each building or non-building structure expansion joint.
3) At each conduit penetration of a “Sound-Rated” wall, floor or ceiling.

11. Provide two locknuts and an insulated throat bushing at each metal conduit terminating at enclosures, including but not limited to outlet boxes, junction boxes, terminal cabinets, switchgear, transformers, switchboards, distribution panels and panelboards.

12. Provide metallic or plastic closure caps on all conduit ends during construction, until installation of conductors in the respective conduit.

13. Conduit run exposed, shall be run at right angles or parallel to the walls or structures. All changes in exposed conduit directions, either horizontally or vertically, shall be made with conduit bodies. Conduits on exposed beams or trelliswork shall be painted to match surrounding surfaces.

14. Conduit exposed on roof:

    a. Conduits installed exposed on roofs shall be installed on conduit sleepers. Place the conduit sleepers a maximum of 5-feet on center along the entire length of the conduit; under conduit expansion/ deflection fittings; under each junction box and within 24-inches of each conduit bend.
    b. Provide a conduit support “C” channel continuous along the top length of the sleeper and rigidly bolted to the sleeper. Conduits shall be loosely fastened to each sleeper “C” channel with pipe clamps to allow for relative movement between the sleeper and conduit.
    c. Conduits shall not block or interfere with roof hatches, doors, ventilation openings, dampers, equipment access panels/doors, sky-lights, and roof water drainage.
    e. Conduit sleepers shall be fabricated from “clear” solid redwood 4-inches by 4-inches (nominal) size. Sleeper length shall extend a minimum of 9-inches past the conduits attached to the sleeper, but in no case shall the length of the sleeper be less than 24-inches.
    f. Provide a pad under each sleeper; sleepers shall not be installed in direct contact with the roofing. Sleeper pads shall extend a minimum of 6 inches past each side of the sleeper. The sleeper pad shall be semirigid mineral surfaced composition board, not less than 0.375-inch thickness, bituminous impregnated, manufactured for application on the specific roofing material. Remove roofing “Ballast” (gravel) under pad, prior to installation of sleeper pad. Do not puncture roof membrane.
    g. Position the “Length” of the conduit sleepers’ parallel to the roof slope, slightly-angled to prevent obstruction of roof drainage water flow. Where the conduit routing prevents placing the conduit sleeper parallel to the roof slope, provide two separate sleeper pads for the conduit sleeper, with a continuous 3-inches wide water drainage gap between the sleepers. Align the water drainage gap to allow unimpeded water travel along the roof slope drainage flow line between the pads.
    h. Sleepers and sleeper pads shall be set in nonhardening mastic, a minimum of 0.25-inch thickness. Mastic shall be inorganic, non-hardening, and complying with ASTM-D1227. Mastic shall be applied with continuous uniform coverage, minimum 0.25-inch thickness, on all the surfaces of each conduit sleeper and on the sleeper pad contact surface with the roof.

15. Rigid conduit shall not be strapped or fastened to equipment subject to vibration or equipment mounted on shock absorbing bases.

16. RMC conduit threads:

    a. Machine cut threads on RMC conduit required for field fabrication shall comply with NPS and ANSI-B1.20.1. Galvanized after fabrication.
    b. The length of bare metal exposed during thread fabrication shall be completely covered by conduit couplings and fittings. Additionally, the thread length shall insure that conduit joints will reach “Torque” tightness and become secure before conduit ends “Butt” together and before conduit ends “Butt” into the “Shoulders” of other conduit fittings.
    c. Running threads or right/left-handed threads shall not be used to connect RMC.

17. RNMC conduit:

    a. Joints and fittings shall be solvent welded to RNMC conduit. Joints and fittings shall be watertight and airtight after fabrication.

18. Tighten each conduit fittings and fitting appurtenance, to the “Torque” (allowable tolerance ±5%) value recommended by the Fitting Manufacturer and applicable Code. If three or more conduit fittings are found to not be in compliance with the Manufacturer’s “Torque” (tightness) recommendations, the following corrective actions shall occur:

    a. The Contractor shall tighten “Re-Torque” the defective fittings and all similar conduit fittings installed as part of the Contract Documents in the presence of the Owner’s Representative.
    b. If the respective conduit fittings similar to the deficient “Torque Tightness” fittings are installed concealed in walls, floors, above ceilings or below grade, the Contractor shall expose the fitting, to allow retightening each similar conduit fitting to the Manufacturers recommended “Torque” values.
    c. All the cost to repair the direct, indirect, incidental damages and Contract delays resulting from complying with these Requirements shall be the sole responsibility of the Contractor and shall be included in the bid price.

19. Horizontal directional boring for underground conduit:

    a. Provide a directional guided horizontal “bore-hole” underground conduit installation where one or more of the following conduits occur:

        1) Continuous trenching excavation and backfill for conduit installation is not permitted by the Contract.
        2) Where continuous trenching excavation due to the existing surface and below grade conditions and restrictions, is not possible or practical to excavate a trench.

    b. Provide “Path-Tracing” of the underground bore head, from the surface, along the entire horizontal bore length. Path tracing shall use electronic transmitters and receivers, continuously communicating the underground bore head locations and depth to the bore equipment operator. The directional boring system shall employ active tracking and directional position/steering control of the bore equipment drill head location. The

active tracking system shall provide a portable receiver/transmitter unit for tracking the position of the moving drill head; a sensor “Sonde” unit on the drill head for tracking signals to the receiver /transmitter; and a drill head tracking data view display located at the boring equipment operator position to view the drill head position information sent from the portable receiver/ transmitter. As manufactured by SPX-Radiodetection Company or similar products.

c. Provide vertical pilot excavations not more than 50 feet on center along the path of the borehole to intercept the horizontal bore-hole routing, provide excavations at the beginning and end terminals staging points of the horizontal borehole.
d. Provide full depth “Shoring” of the vertical pilot excavations. Remove the shoring, backfill, compact and repair the excavations when conduit installation is complete.
e. “Drilling-fluid” shall be used during “Back-reaming” and “Pullback”, pumped through the drill pipe to the bore drill head.
f. Directional guided horizontal drilling shall employ equipment specifically designed and manufactured for the process. The Equipment Manufacturer shall train bore equipment operating personal in the proper operation of said equipment.
g. Locate the position, size, depth and identify all underground “Cross-Bore” existing underground utilities, pipes, structures and conflicts along the entire bore path of each underground bore, prior to initiating directional boring work. Notify respective Agency for each “Cross Bore” potential crossing. Comply with the recommendations of the Cross Bore Safety Association (CBSA).
h. Horizontal, directionally guided boring equipment, as manufactured: by Ditch Witch; Vermeer Manufacturing; or Case Corporation.

J. Conduit Seals

1. Provide conduit seal fittings at each location where a conduit transitions or passes through the following areas and where indicated on the Drawings:

   a. Refrigerated areas.
   b. Temperature control rooms including warming rooms, steam rooms, saunas etc.
   c. Classified hazardous material areas.
   d. Water intrusion areas.

2. Provide conduit seals on each conduit entering a building from a below grade area located outside the building (i.e., basement, vault etc.) and connecting to the following types of equipment

   a. Transformers
   b. Panelboards
   c. Motor control centers
   d. Switchboards
   e. Switchgear
   f. Motors
   g. Terminal cabinets

h. Terminal backboards
i. Cable trenches

3. Conduit seals shall be installed in locations to ensure the fitting is visible and accessible.

K. Conduit Bodies

1. Conduit bodies shall be installed in exposed conduit locations only or above accessible ceilings.

2. Conduit bodies shall be accessible for removing body cover and pulling wire through the conduit body.

3. Conduit bodies shall not be installed inside enclosed walls.

L. Preparation of Reuse of Existing Conduits

1. Prepare existing conduits shown to be reused as part of Contract Work as follows: Complete the required work prior to installing any conductors or cables in respective existing conduits.

a. “Rod” out existing raceways to be used under this contact, with approved test and flexible mandrels to remove all obstructions to clear debris from inside conduits.
b. Use test mandrels at least 12-inches long, 0.25-inch less than diameter of duct at center, tapering to 0.5-inches less than duct size at ends.

2. If test mandrels cannot be pulled through raceways, Contractor shall perform the following to clear the existing raceways:

a. Force rigid or semi-rigid rods through the raceways to clear the obstructions from one to both ends of the raceway.
b. Force a power-driven rotating router device through the conduit from one or both ends of raceways. Device shall incorporate small diameter cutting blades. Repeat the “Router” process in incremental stages to a cutting blade diameter approximately ⅛-inch smaller than the raceway inside diameter.

3. After clearing the raceway of obstructions, pull a test mandrel or brush through the raceway to clear the remaining debris from the raceway.

3.4 WIRE AND CABLE

A. Branch circuit and fixture joints for #10AWG and smaller wire shall be made with UL-approved connectors listed for 600 volts, approved for use with copper and/or aluminum wire. Connector to consist of a cone-shaped, expandable coil spring insert, insulated with a nylon shell and two wings placed opposite each other to serve as a built-in wrench or shall be molded one-piece. As manufactured by 3M-"Scotchlok".

B. Branch circuit joints of #8AWG and larger shall be made with screw pressure connectors made of high strength structural aluminum alloy and UL-approved for use with both copper and/or aluminum wire as manufactured by Thomas & Betts. Joints

shall be insulated with plastic splicing tape, tapered half-lapped and at least the thickness equivalent to 1.5-times the conductor insulation. Tapes shall be fresh and of quality equal to Scotch.

C. Use UL listed pulling compound for installation of conductors in conduits.

D. Correspond each circuit to the branch number indicated on the panel schedule shown on the Drawings except where departures are approved by the Owner's Representative.

E. All wiring, including low voltage, shall be installed in conduit.

F. Control wiring to conform to the Wiring Diagrams shown on the Mechanical Drawings and the Manufacturer's Wiring Diagrams.

G. All splices in exterior pullboxes and light poles shall be cast resins encapsulated.

1. Power conductor splices as manufactured by 3M Scotchcast Series 82/85/90; or Plymouth; or equal.

2. Control and signal circuits as manufactured by 3M Scotchcast Series 8981 thru 8986; or Plymouth; or equal.

H. Neatly group and lace all wiring in panelboards, switchboards, motor control centers and terminal cabinets with plastic ties at 3-inches on centers. Identify and tag all spare conductors.

3.5 MC CABLE INSTALLATION

A. General

1. MC cable shall not be "Spliced" or coupled directly to any other conduit type under any circumstance.

2. MC cable shall not be installed exposed. Where exposed installation occurs, provide a conduit to completely enclose and protect the MC cable. The inside diameter of the conduit shall be sized 1.6-times the outside diameter of the MC cable. The conduit type and installation methods shall comply with the Contract Documents.

3. MC cable shall be continuous length between end point terminations, without intermediate splices or junctions.

4. MC cable shall be supported and attached. MC cable supports and attachments shall be the same as Contract Document Requirements for conduit, with the following exceptions:

a. Support at not more than 3-feet intervals along the entire length of the MC cable.
b. Support within 12-inches of each bend or change of direction.
c. Support within 12-inches of each termination entrance.

d. MC cables shall not be bundled. Provide “stack-supports” to separate parallel MC cables.

5. The minimum installed bending radius shall not be less than 8-times the outside diameter of cable assembly, as measured at the inside radius cable jacket surface.

6. Cable lengths of less than 6-feet shall not be permitted.

7. MC cable shall be installed and terminated to comply with Manufacturer’s recommendations.

B. Permitted Applications

1. MC cable may be provided only for electric power circuits and where complying with all of the following conditions:

   a. Circuits operating online to ground 60Hz AC circuit voltages, exceeding 100 volts and less than 500 volts.
   b. The full load ampere rating and circuit conductor quantities of the proposed MC cable shall be equal to or greater than the full load ampere rating for the conduit and wire conductors shown on the Contract Drawings.
   c. The electrical circuit voltage drop of the proposed MC cable shall be equal to or less than for the conduit and wire conductor sizes shown on the Contract Drawings.
   d. The conductor sizes in MC cable shall not be smaller than the conductor sizes described for conduit and wire installations.
   e. MC cable shall not be permitted on circuits with more than one phase conductor per phase.
   f. MC cable circuits or portions of MC cable circuits shall not be connected to wiring devices, lighting equipment or motors. MC cable shall not be permitted for circuit wire sizes #4AWG or smaller.

2. MC Type cable may only be installed in the following locations in areas that do not contain classified hazardous materials (MC cables without PVC jacket):

   a. Concealed in hollow non-masonry metal stud frame and wood stud frame fully enclosed walls.
   b. Concealed above fully enclosed ceiling spaces.

3. MC cables with PVC jacket may only be installed in the following locations:

   a. Underground installation locations.
   b. MC cable installed below grade shall be not less than #4AWG conductor size.
   c. The Underground Installation Requirements for MC cable shall be the same as for conduit and wire systems including but not limited to trenching, burial depth, circuit separation, supports, concrete encasement, etc.
   d. MC cables shall not be installed below areas with classified hazardous materials.

3.6 CABLE RACKS

Provide cable racks in precast and cast-in place concrete pullboxes, manholes and cable trenches.

3.7 TESTING

A. Testing Conduit and Conduit Bends
The Contractor shall demonstrate the usability of all underground raceways, and field fabricated conduit bends installed as part of this Contract.

1. A round tapered segmented semi-rigid mandrel with a diameter approximately ¼-inch smaller than the diameter of the raceway, shall be pulled through each new raceway.

2. The mandrel shall be pulled through after the raceway installation is completed. Conduits which stub-out only, may have the mandrel pulled after the concrete encasement is completed, but prior to completing the backfill.

3. Owner's Representative shall witness the raceway testing for usability. A Representative of the respective Utility Company shall witness the raceway testing where applicable.

4. Contractor shall repair/replace any conduit and conduit bend provided under this Contract which will not readily pass the mandrel during this test.

END OF SECTION 26 05 30
010423/535050

SECTION 26 24 13

SWITCHBOARDS

PART 1 - GENERAL

1.1 SCOPE

A. Work Included: All labor, materials, appliances, tools, equipment necessary for and incidental to performing all operations in connection with furnishing, delivery and installation of the work of this Section, complete, as shown on the Drawings and/or specified herein. Work includes, but is not necessarily limited to the following:

1. Examine all other Specification Sections and Drawings for related work required to be included as work under Division 26.

2. General Provisions and Requirements for electrical work.

1.2 SUBMITTALS (ADDITIONAL REQUIREMENTS)

A. Provide Schematic "ladder type" logic control wiring diagrams and "point-to-point control wiring diagrams showing control and protective systems interlocks.

B. Provide Nameplate Engraving Schedule.

C. Submit Full-Scale Time/Current Transparencies on Log/Log Paper for all Fuses, circuit breakers, ground fault system devices, and relays.

D. Short Circuit and Arc-Flash

1. Perform and submit engineered settings for each fuse and adjustable circuit breaker device, showing the correct time and current settings to provide the coordination within the limits of the specified equipment, per the latest applicable Standards of IEEE and ANSI. Provide Electric Arc-Flash calculations as part of the Coordination Study recommendations. The information shall be submitted in tabular form with an engineering narrative, six copies. Obtain the necessary information to complete the calculations from the serving electrical utility company.

2. The goal is to minimize an unexpected but necessary electrical system outage and personnel exposure to the smallest extent possible within the fault occurrence location, using the specified Contract Equipment, including but not limited to:

a. IEEE-242, Recommended Practices for Protection and Coordination of Industrial and Commercial Distribution.
b. IEEE-1584, Guide to Performing Arc-Flash Hazard Study.
c. CEC/NEC

E. Factory Tests: Switchgear Tests - ANSI C37.20. Certified copies of design tests, production tests, and conformance tests of the switchgear shall be submitted and

review comments shall be received before delivery of equipment to the project site. In lieu of the above tests, a report of these tests previously performed on identical units of each rating will be acceptable.

1.3 APPLICABLE STANDARDS

A. The Switchgear Equipment shall be Designed, Tested and Assembled to comply with ANSI, IEEE, and NEMA and UL.

B. Equipment Components/Devices, Switchboards, and/or Switchgear shall be manufactured by: General Electric, Eaton, Square–D, or Siemens.

PART 2 - PRODUCTS

2.1 BUSSING

A. Horizontal and Vertical Busses shall be full lengths in each Equipment Section. Buses shall have a minimum withstand rating equal to available fault current indicated on Drawings, but in no case shall the rating be less than 42,000-amp, symmetrical.

B. Provide Interconnected Full Capacity Neutral Bus in each Section with the same ratings and construction as the phase busses.

C. Provide Interconnected Ground Bus in each Section.

D. Provide Space and all Hardware and Mounting Attachments for future devices as indicated on the Drawings.

E. Main Horizontal Bussing shall be full capacity in all Switchboard Sections.

F. Vertical Buss may be Tapered, to not less than 1/3 the ampacity is of the Main Horizontal Buss; but in no case shall the vertical buss be of less capacity than the sum of the frame size ampacities of overcurrent devices mounted in the respective Sections including any indicated spares and spaces.

G. The Switchboard Bussing shall be of sufficient cross-sectional area to meet UL Standard 891 on temperature rise Bus shall be copper with silver plated bus joints or extruded aluminum with tin plated bus joints. The through bus shall have provisions for the addition of future Sections. The through bus supports, connections and joints are to be bolted with grade 5 hex head bolts and Belleville washers to minimize Maintenance Requirements.

2.2 CIRCUIT BREAKERS

A. General

1. Circuit protective devices as indicated on the Drawings. All devices shall have an interrupting capacity not less than the maximum available fault current at the circuit breaker as indicated on the Drawings, but in no case shall the interrupting capacity be less than 65,000-amp symmetrical interrupting for 480/277-volt devices and 42,000-amp symmetrical for 240 volt or 208/120 volt devices.

2. Provide padlock-off devices on each device. Breakers shall provide time overcurrent and instantaneous circuit protection.

3. Circuit breakers shall employ a stored energy, quick make-quick break, and trip free operating system on each phase, with common trip. Breakers shall comply with UL 489 and NEMA AB1 latest revisions.

4. Circuit breakers noted as "100%" on the Drawings shall be tested and rated to carry the breaker full rated (100%) ampere load continuously including the assemblies the circuit breakers are installed into.

5. Provide conductor lugs on circuit breakers to accept conductor sizes and quantities shown on Drawings.

6. Electrical equipment including switchgear, switchboards, electric panels and control panels, motor control centers, combination motor starters, trans-formers, disconnects, etc., shall each be labeled by the Manufacturer with “Electric-Arc-Flash” warning signs. The signs shall explain a hazard to personnel may exist if the equipment is worked on while energized or operated by Personnel while energized. The sign shall instruct personnel to wear the correct Protective Equipment/clothing (PPE) when working “Live” or operating “Live” electrical equipment and circuits.

B. Performance Requirements for Circuit Breakers Conforming to one or more of the following applications:

- 600-amp or larger frame size.
- Larger than 400-amp trip.
- Service entrance in main switchboard.
- Noted as main circuit breakers on the Drawings.

1. Circuit breaker shall employ current sensors and static electronic automatic trip system. Three phase or single-phase operation as noted on the Drawings. Current carrying components shall be completely isolated from the static trip units. The trip unit shall be independent of external power sources. Circuit breaker shall be UL listed for reverse connection.

2. Breaker solid state trip control functions shall provide the following field adjustable features.

    a. Adjustable ampere setting to vary the continuous current carrying capacity, minimum range of 80% thru 100% of full load trip rating.
    b. Adjustable long-time delay setting to vary the time the breaker will trip under sustained overload conditions. Minimum of three settings, "minimum - intermediate - maximum".
    c. Adjustable short-time pickup to vary the level of high current the breaker can carry for short periods of time, minimum range of 2 times thru 8 times of ampere setting.
    d. Adjustable short time delay to vary the time of the short-time pickup. Minimum of three settings "minimum-intermediate-maximum".

e. Short time "I^2t" switch to allow a current-squared multiplied by time ramp function in the short-time system. Two position setting "in-out".
f. Adjustable instantaneous pickup to vary the breaker ampere setting for immediate (instantaneous) interruption of severe overloads (short circuits). Adjustable minimum range of 2.0 times thru 9 times of circuit breaker ampere sensor rating (note where the coordination study requires a higher instantaneous setting, change the specified adjustable instantaneous trip to fixed instantaneous trip at 15 times the breaker ampere sensor setting).
g. Individual fault trip indicators shall provide local indication on the breaker for overload and short circuit (and ground fault where applicable) conditions.
h. Provide one Manufacturer standard test set for solid state trip circuit breakers.

3. Arc Energy Reduction

a. Where the highest continuous current trip setting for which the actual overcurrent device installed in a circuit breaker is rated or can be adjusted is 1,200-amp or higher the following shall apply:

1) Documentation. Documentation shall be available to those authorized to design, install, operate, or inspect the installation as to the location of the circuit breaker(s).
2) Method to Reduce Clearing Time. One of the following or approved equivalent means shall be provided:

a) Zone-selective interlocking
b) Differential relaying
c) Energy-reducing maintenance switching with local status indicator
d) Energy-reducing active arc flash mitigation system
e) An approved equivalent means

C. Performance Requirements for Circuit Breakers Conforming to one or more of the following applications:

- Smaller than 600 amp frame size.
- 400 amp and smaller trip.
- 225 amp and larger frame size.
- Larger than 100 amp trip.

1. Circuit breaker shall be molded case thermal-magnetic or solid-state trip. Thermal-magnetic circuit breakers shall be furnished with field adjustable, instantaneous magnetic trip element.

2. Solid state trip breakers shall conform to the Requirements described for solid state breakers larger than 400 amp trip except, only the following field adjustments are required;

a. Ampere setting adjustable minimum range of 80% thru 100% of full load trip rating.
b. Short time pickup adjustable minimum range of 2 times thru 8 times of the ampere setting.

c. Fixed or field adjustable instantaneous trip.

D. Performance Requirements for Circuit Breakers Conforming to the following applications:

- 100 amp frame size and smaller.
- 100 amp and smaller trip.

1. Circuit breaker shall be molded case thermal-magnetic trip.

E. Series Rated Circuit Breakers (SR)

1. Performance Requirements for circuit breakers conforming to the following applications:

a. 400 amp and smaller trip and identified as Series Rated (SR) on the Drawings. Circuit breakers shall be UL listed for series rating with all downstream circuit breakers.

2.3 SWITCH AND FUSE FEEDER PROTECTIVE DEVICES

A. Fusible Switches: Quick-make, quick-break type with rejection clips for use with Class "R" fuses. Switches with ratings up to and including 100-amp at 240 volts shall be twins mounted. Switches rated through 60-amp and 480 volts shall be twins mounted. Switches shall be removable from front of switchboard without disturbing adjacent units or switchboard bus structure.

B. Fuses shall be time delay current limiting types, UL Class RK-1 unless otherwise indicated on the Drawings. Provide one spare set of fuses of each size and type in each switchboard.

2.4 MAIN SWITCHBOARDS

A. Switchboard shall be floor-mounted, dead-front, dead-rear type, front and rear aligned, self-supporting, consisting of one or more Vertical Sections with group mounted non-drawout circuit protective devices, instrumentation and control wiring as indicated on the Drawings and as specified herein.

B. Switchboard shall be designed, built and tested in accordance with applicable portion of the latest editions of NEMA PB-2, Underwriters Laboratories No. UL-891 and the National Electrical Code.

C. Switchboard Sections shall be floor standing self-supporting, of the universal frame type using die-formed, 12-gauge steel members bolted and welded together. Provide removable side and rear plates with formed edges all around. Provide ventilation openings required maintaining minimum operating temperature. Provide removable steel cover plates for all usable device spaces. Provide lifting means and provisions for moving by means of rollers or skids to installation location. Bolt individual Sections together to form a single rigid switchboard assembly. Provide full height, hinged, vertical wireway metal covers, on each vertical wireway, of each Distribution Section of the switchboard, containing group mounted feeder protective devices.

D. Switchboard shall include, but not be limited to, the following:

1. Underground Pull Section as required by the serving utility incoming service.

2. Metering facilities as required by the serving utility.

3. Current transformer space.

4. Main disconnects.

5. Distribution and feeder circuit protective devices.

6. Owner metering (where indicated on Drawings).

7. Bussing, incoming utility compliant and distribution.

2.5 DISTRIBUTION SWITCHBOARDS

A. Switchboards shall be floor mounted, dead-front, dead-rear type, front and rear aligned, self-supporting, consisting of one or more Vertical Sections with group mounted circuit protective devices, instrumentation and control wiring as indicated on the Drawings and as specified herein. Switchboards shall comply with UL Standard #UL-891.

B. Distribution switchboards shall include but not be limited to the following:

1. Main disconnects (where indicated on Drawings).

2. Feeder protective devices.

3. Owner metering (where indicated on Drawings).

4. Bussing.

C. Switchboard Sections shall of the universal frame type using die-formed, 12 gauge steel members bolted and welded together. Provide removable side and rear plates with formed edges all around. Provide ventilation openings required maintaining minimum operating temperature. Provide removable steel cover plates for all usable device spaces. Provide lifting means and provisions for moving by means of rollers or skids to installation location. Bolt individual Sections together to form a single rigid switchboard assembly. Provide full height, hinged, vertical wireway metal covers, on each vertical wireway, of each Distribution Section of the switchboard, containing group mounted feeder protective devices.

2.6 CONTROL WIRING

A. Terminal Blocks with Barriered Terminals shall be provided for all control wiring terminator points. Control wiring shall be run in horizontal and vertical, isolated, internal metal wireways and shall be carried across hinges in laced bundles. Wire terminators shall be crimp-on type spade terminal

B. Secondary Control Wiring shall be a minimum of 14 AWG stranded copper type SIS 600-volt insulation.

C. Control Circuits shall have circuit number tags at each termination or break in the wire to match circuit numbers on terminal strips and control wiring diagrams.

PART 3 - EXECUTION

3.1 INSTALLATION

Install switchboards in accordance with Manufacturer's written instructions and applicable portions of NECA's "Standards of Installations" for switchboards and motor control centers.

3.2 SWITCHBOARD ANCHORING

Bolt switchboards to floor and wall where wall exists. Where units are free standing provide preformed steel channel or angle iron bracing to nearest wall or building structural member. Switchboard anchoring shall be designed for a 1.0 gravity lateral acceleration of the equipment. Submit structural calculations and details.

3.3 TESTING (ADDITIONAL REQUIREMENTS)

Adjustable settings shall be set and tested after the equipment installation is complete, for proper operation at set pickup and/or drop-out points, by an independent Test Laboratory. Testing shall comply with the Equipment Manufacturer recommendations. Submit three copies of all test results to OWNER'S Representative. Correct any deficiencies and retest.

3.4 IDENTIFICATION (ADDITIONAL REQUIREMENTS)

A. Provide a Red and White Bake-lite Nameplate with ½-inch High Letters in each Section Fastened to Face of Dead-Front Plate, to Read: "Danger 480 (actual volts) volts, KEEP OUT, AUTHORIZED PERSONNEL ONLY".

B. Manufacturer shall stencil the equipment name on each device and equipment section to correspond to the identification of the Drawing.

C. Devices Mounted in Equipment Controlling Protective Devices shall be provided with nameplates indicating device controlled or monitored.

END OF SECTION 26 24 13
010423/535050

SECTION 26 24 16

PANELBOARDS AND TERMINAL CABINETS

PART 1 - GENERAL

1.1 SCOPE

A. Work Included: All labor, materials, appliances, tools, equipment necessary for and incidental to performing all operations in connection with furnishing, delivery, and installation of the work of this Section, complete, as shown on the Drawings and/or specified herein. Work includes, but is not necessarily limited to the following:

1. Examine all other Specification Sections and Drawings for related work required to be included as work under Division 26.

2. General Provisions and Requirements for electrical work.

1.2 SUBMITTALS (ADDITIONAL REQUIREMENTS)

A. Provide Manufacturers catalog data for panels, cabinets, and circuit breakers.

B. Provide Shop Drawing showing panel circuit arrangements, size, voltage, ampacity, overcurrent protective devices, etc.

C. Provide nameplate engraving schedule.

D. Short Circuit, Coordination and Arc-Flash

1. Perform and submit engineered settings for each equipment location, fuse and adjustable circuit breaker device, showing the correct time and settings to provide the selective coordination within the limits of the specified equipment, per the latest applicable Standards of IEEE and ANSI. Provide electrical system short circuit fault analysis, both 3-phase line-to-line and 1-phase line-to-ground calculations as part of the Coordination Analysis recommendations. Provide Electric Arc-Flash calculations as part of the Coordination Analysis recommendations.

2. The information shall be submitted in both tabular form and on time current log-log graph paper, with an engineering narrative. Written narrative describing data, assumptions, analysis of results and prioritized recommendations, six copies.

3. The goal is to minimize an unexpected but necessary electrical system outage and personnel exposure to the smallest extent possible within the fault occurrence location, using the specified Contract equipment. Shall comply with, but not limited to:

a. IEEE-242, Recommended Practices for Protection and Coordination of Industrial and Commercial Distribution.
b. IEEE-399, Recommended Practice for Industrial and Commercial Power System Analysis.

c. IEEE-1584, Guide for Performing Arc-Flash Hazard Calculations Working Group
d. CEC/NEC

4. Electrical equipment including switchgear, switchboards, electrical panels, and control panels, transformers, disconnects, etc., shall each be labeled by the Manufacturer with “Electrical-Arc-Flash” warning signs. The signs shall explain a hazard to Personnel may exist if the equipment is worked on while energized or operated by personnel, to wear the correct protective equipment/clothing (PPE) when working “Live” or operating “Live” equipment and circuits.

5. The Contractor shall independently contact the serving Utility Company to obtain the current system short circuit amps or available fault current.

6. The Contractor shall independently obtain As-Built Drawings for the existing infrastructure to establish lengths. If As-Built Drawings are no available, the Contractor shall research existing conditions and make reasonable but conservative estimates of conductor length. Where existing conductors have been re-used, the Contractor shall confirm conductor quantity, size, and conduit type.

PART 2 - PRODUCTS

2.1 PANELBOARDS AND DISTRIBUTION PANELS

A. Shall be flush or surface mounting as indicated with group -mount circuit protection devices as shown on panel schedule, hinged lockable doors, index cardholders and proper bussing.

1. Panelboards shall comply with the latest versions:

a. NEMA – PB1.
b. UL – 50 and 67.
c. CEC/NEC.
d. ASTM-B187.

2. Where indicated on the Drawings shall be furnished with sub-feed breakers and/or additional conductor lugs, split bussing, contactors, time switches, relays, etc., as required.

a. Branch circuit panels up through forty-two circuits shall be single section, to accommodate all the circuits and components.
b. Distribution panels shall be single section or multi-section, to accommodate all the circuits and components.

3. Panels shall be “Service-Entrance” equipment rated when the panel main incoming supply feeder originates from one of the following:

a. Originates outdoors exterior of the building in which the respective panel is located.

b. Originates from an electrical supply source not located in the same building as the respective panel.

B. Housing and Painting, Panels and Terminal Cabinets

1. Shall be finished with one coat of rust inhibitor zinc chromate and coat of primer sealer after a thorough cleaning.

2. Finish color paint as selected by Owner's Representative where exposed to public view (e.g., corridors, covered passages, offices, etc.). Prime coated panelboard shall be painted to match surroundings after installation in public areas.

3. Manufacturer's standard color in electrical rooms /closets, janitor's, HVAC and storage rooms.

4. Panel and panel doors shall be fabricated of sheet steel of the following minimum gauges.

   a. Full height hinged, locking door. Trim and door #12-gauge steel.
   b. Panel enclosure - Code gauge steel.
   c. Panels installed in indoor dedicated electrical equipment rooms and dedicated electrical equipment closets, may omit full height hinged locking panel door. Dead front cover behind omitted panel door shall remain.

5. NEMA-1 Metal Housing, for indoor locations.

6. NEMA-3R Metal Housing, tamper resistant, for outdoor locations.

7. Furnish all panels and terminal cabinets with the Manufacturers flush locks and keys except where indicated otherwise herein. Keys and locks shall be interchangeable for all panels. Provide two latches and two locks for door heights exceeding 36-inches.

8. Fasten the trim to panel and terminal cabinets by means of concealed, bolted or screwed fasteners accessible only when the door is open.

C. Panels 208/120 volt, three phase, 4-wire, S/N or 120/240-volt, single phase, 3-wire, S/N.
Branch circuit panel as manufactured by:

1. Eaton "Pow-R-Line 1 or 2" Series

2. General Electric "A" Series

3. Square D "NF/NQ" Series

4. Siemens "P1/P2" Series

D. Branch circuit panels for 480/277 volt, three phase, 4 wire, S/N. Panelboard as manufactured by:

1. Eaton “Pow-R-Line 2” Series
2. General Electric “A” Series
3. Square D “NF” Series
4. Siemens “P1/P2” Series

E. Distribution panels as manufactured by:

1. Eaton “Power-R-Line 4” Series
2. General Electric “Spectra” Series
3. Square D “I-Line” Series
4. Siemens “P4/P5” Series

F. Top and bottom gutter space shall not be less than 6-inches high. Provide 6-inches additional gutter space in all panels where double lugs are required, or where cable ampere size exceeds bus ampere size. Provide 12-inches additional gutter space in all panels for aluminum feeders where used.

G. Panel dimensions.

1. Panels with buss sizes 50-amp thru 400-amp

   a. Shall be 20-inches wide. Surface or flush mounting as indicated.
   b. Recess mounted type shall have a 20-inches wide (maximum) recess metal enclosure with overlapping edge trim plate cover extending 1-inch on all sides of enclosure.
   c. Depth shall be 5.75-inches nominal. Height of panel as required for devices and terminations.

2. Panels with buss sizes greater than 400-amp

   a. Narrow panels 24-inches (maximum) wide by 6.5-inches (maximum) deep units. Wide panels’ 25-inches to 44-inches (maximum) wide by 8-inches to 15-inches (maximum) deep units. Nominal 90-inch panel height.
   b. The wider units shall be used only at locations where the narrow unit is not available with the quantity or size of large-ampere frame branch / sub-feed circuit protective devices shown on the panel schedules, or where the main breaker size exceeds the narrow panel maximum.
   c. Distribution panels shall be floor standing and supported from behind the panels at walls.

H. Distribution panels and branch circuit panels maximum load rating

1. Panelboards and Distribution Panels exceeding 800-amp load rating shall not be permitted.

2. Provide Distribution Switchboards instead of Distribution Panels for bus load and circuit load ratings exceeding 800-amp.

I. Panel Auxiliary Cabinets

1. Panelboards shown on the Drawings with relays, time clocks or other control devices shall have a separate auxiliary metal barriered compartment mounted above panel.

2. Panelboards with circuits controlled by low voltage remote control relays shall be provided with separate auxiliary cabinets to contain the relays, adjacent to the panelboard.

3. Provide auxiliary cabinets with separate hinged locking door to match panel-board.

4. Provide mounting subbase in cabinet for control devices and wiring terminal strips.

J. Panels shall have a circuit index cardholder removable type, with clear plastic cover. Index card shall have circuit numbers imprinted to match circuit breaker numbers.

1. The panel identification nameplate shall describe the respective panel name and voltage, corresponding to the Contract Documents.

2. The electrical power source, name and location of each panel supply-feeder and supply equipment name shall also be identified and described on the respective panel nameplate.

2.2 SHORT CIRCUIT RATING

A. Circuit protective devices and bussing as indicated on the Drawings. All devices and bussing shall have a short circuit fault withstand and interrupting capacity not less than the maximum available fault current at the panel and as indicated on the Drawings, plus a 25% additional capacity (safety margin). However, in no case shall the short circuit fault interrupting and withstand capacity be less than the following symmetrical short circuit.

	C/B and/or Bus Rating	Circuit Voltage	Short Circuit Amp.
1.	400A and less	240V and below	10,000A
2.	400A and less	over 240V and below 600V	14,000A
3.	Over 400A & 800A & below	240V and below	42,000A
4.	Over 400A & 800A & below	over 240V and below 600V	30,000A

B. Panel Short Circuit Fault Rating

1. General

a. Provide a “fully rated” for short circuit fault interrupt and full load ampere main circuit breaker in each branch circuit panel and/or each distribution panel. Provide the main circuit breaker whether or not a main circuit breaker is shown otherwise on the Drawings, schedules or diagrams. The “utility-source” plus the “motor-load” transient contributions shall be used to establish the available fault duty values, unless indicated otherwise on the Drawings.
b. The panel main circuit breaker full load ampere capacity rating shall equal the respective panel main bus ampere rating.
c. The panel assembly, buss and circuit protection devices bolted fault short circuit withstand and bolted fault short circuit interrupt ratings shall not be less than 125% greater (including a 25% safety margin) than the available utility-source symmetrical and asymmetrical bolted fault short circuit current when “Series combined rated” with the panel main circuit breaker.
d. The main circuit breaker rated “bolted-fault” short circuit fault interrupt and withstand short circuit rating shall not be less than 125% (including a 25% safety margin) of the upstream main service entrance “bolted-fault” available (symmetrical and asymmetrical) short circuit current.

2. Distribution Panelboards

a. Distribution panel, main circuit breaker, all feeder circuit breakers, and all branch circuit breakers shall be “fully-rated” (plus safety margin) for the available bolted fault short circuit current (including safety margin).
b. Shall provide time/current-tripping coordination with downstream equipment and upstream equipment.

3. Non-emergency branch circuit panelboards 400-amp buss and smaller; Non-emergency branch circuit panelboards 400-amp trip main circuit breaker and smaller.

a. The branch circuit panel main circuit breaker shall be “fully-rated” (plus safety margin) Current Limiting Circuit Breaker type (CLCB). Shall provide time/current- tripping coordination with upstream equipment.
b. The branch circuit panel main circuit breaker shall be “Series-rated” with the panel downstream branch circuit devices and panel bussing. “The series-rating” shall provide short circuit bolted fault current with-stand protection and short circuit bolted fault interrupt rating protection during a downstream 3-phase line-to-line and/or single-phase line-to-ground short circuit bolted faults.
c. Typical for branch circuit panelboards connected to normal-power (non-emergency) power circuits.

2.3 PANEL CIRCUIT BREAKERS, CIRCUIT PROTECTION DEVICES

A. Circuit Breakers General, for Distribution Panels and Panelboards

1. NEMA-AB1 and AB3, comply with latest revision.

2. UL-1087, UL-489 and IEC-60.947.2 rated devices, comply with latest revision.

3. 5Hz AC closing and 3Hz AC trip and clear.

4. Main circuit breakers for distribution panels exceeding 400-amp and larger.

   a. Shall be Insulated Case Circuit Breaker type ICCB.

5. Main circuit breakers for branch circuit panelboards 400-amp buss and smaller.

   a. Shall be Current Limiting Circuit Breaker type-CLCB for non-emergency panelboards.
   b. Shall be Molded Case Circuit Breaker type-MCCB for emergency panelboards.

6. Branch circuit breakers and feeder circuit breakers smaller than 100-amp trip shall be Molded Case Circuit Breakers type-MCCB and/or Current Limiting Circuit Breakers type-CLCB.

7. All circuit breakers 100-amp and larger trip shall employ sensors and solid state digital electronic automatic trip system. Short-time and long-time. Time/ current curve shaping field adjustable functions and adjustable instantaneous trip. Typical for Molded Case Circuit Breaker type-MCCB, Insulated Case Circuit Breaker type-ICCB and Current Limiting Circuit Breaker type-CLCB.

8. Refer to Specification Section 26 24 13 and/or 26 11 00 for additional Circuit Breaker Requirements.

B. Manufacturer

1. Circuit breakers as manufactured by the following Companies only are acceptable:

   a. Eaton
   b. General Electric Co.
   c. Square D Co.
   d. Siemens

C. Configuration

1. Circuit breakers shall be arranged in the panels so that the breakers of the proper trip settings and numbers correspond to the numbering in the panel schedules on the Drawings.

2. Circuit numbers of breakers shall be black-on-white micarta tabs or other previously approved method. Circuit number tabs, which can readily be changed

from front of panel, will not be accepted. Circuit number tabs shall not be attached to or be a part of the breaker.

3. Panelboard circuit protection devices shall be bolt on type for connection to panel bus. Removable and installable without disturbing adjacent devices.

4. Provide conductor wire terminations (lugs) on each circuit protection device for incoming main feeder, branch circuits and outgoing feeder circuits. Dual rated copper/aluminum and compatible with the respective conductor size, type and quantity.

5. Where 2-pole or 3-pole breakers occur in the panels, they shall be common trip units. Single pole breakers with tie-bar between handles will not be accepted.

6. Branch circuit panels shall be field convertible for bottom entry main incoming feeder or top entry main incoming feeder.

7. Each panel section, the feeder and branch circuit protection devices (3-phase and/or 1-phase) shall be “twin-mount”, side-by-side double row construction for the following circuit sizes:

   a. 480/277 volt, 60-amp circuit size and smaller.
   b. 240 volt – 208/120-volt, 100-amp circuit size and smaller.

D. Lock-Off and Lock-On

1. All circuit breakers shall be pad-lockable in the "off" position.

2. Where branch circuit breakers supply the power to motors and signal systems, the breakers shall also be furnished with lockout clips, mounted in the “on” position. The breakers shall be able to trip automatically with lockout clips in place.

3. Provide lock-on clips on branch circuit breakers supplying fire alarm equipment and fire alarm panels. Provide identification of the dedicated "fire alarm" circuit function and operation. Color-code the circuit breakers to comply with AHJ Requirements.

4. Locking facilities shall be riveted or mechanically attached to the circuit breaker (submit sample for approval. Other means of attachment shall not be accepted without prior written approval of the Owner’s Representative.

E. Switch and Fuse Feeder Protective Devices for Distribution Panels

1. Locations where the Drawings show distribution panels employing switch-fuse circuit protection devices.

2. Fusible Switches: Quick-make, quick-break type with rejection clips for use with Class “R” fuses Current Limiting Fuses (CLF). Switches with ratings up to and including 100-amp at 240 volts shall be twins mounted. Switches rated through 60 amp and 480 volts shall be twins mounted. Provisions for padlocking in the

"on" and/or "off" positions. Switches shall be removable from front of panel without disturbing adjacent units or panel bus structure.

3. Fuses shall be time delay current limiting types, UL Class RK-1 unless otherwise indicated on the Drawings.

   Provide one spare set of fuses of each size and type in each Distribution Panel.

4. Provide auxiliary contact on switch for remote status (on-off) signaling and monitoring. Provide conductor lugs to accept conductor temperature rating, sizes and quantities shown on Drawings.

5. Switch and fuse devices shall be permitted only in distribution panels and only where specifically indicated on the Drawings for feeders.

2.4 PANEL BUSSING

A. Bus Material

1. Bussing shall be rectangular cross section tin-plated copper or alternately silver or tin-plated aluminum.

2. Bussing shall be non-tapered, full length of the enclosure.

B. Ground Bus

1. Each panel shall be equipped with a ground bus secured to the interior of the enclosure. The bus shall have a separate lug for each ground conductor. No more than one conductor shall be installed per lug.

2. Provide additional isolated ground bus in each panel with connecting isolated ground feeders and/or connecting isolated ground branch circuits.

C. Provisions

1. Provide space and all hardware and bus mounting attachments for future devices as indicated on the Drawings.

D. Neutral Bus

1. The ampere rating of the neutral bus of panels and distribution panels shall be a minimum of 100% greater ampere capacity than the ampere rating of the corresponding phase bus.

2. Where the panel is indicated to be provided with an "oversize-neutral" or "200%" neutral on the Drawings, provide 200% ampere capacity rated neutral bus.

2.5 TERMINAL AND AUXILIARY CABINETS

A. Cabinets

1. Fabricated of Code gauge sheet steel for flush mounting (except where noted as surface) of size indicated on the Drawings, and complete with hinged lock-able doors, provide the quantity of 2-way Feed through conductor terminals required for termination of all conductors, plus 15% spares of each type.

2. Cabinet locks to operate from same key used for panelboards. The trim to cabinets shall be fastened by means of concealed bolted or screwed fasteners accessible behind door into cabinets. All cabinets shall have ⅝-inch plywood backing, finished with fireproof intumescent primer and finish coat paint. Provide equipment ground bus in each cabinet.

3. Cabinets shall be finished with one coat of zinc chromate and one coat of primer sealer after a thorough cleaning. Where exposed to public view (e.g., corridors, covered passages, offices, etc.) finish color paint to match surrounding and Manufacture's standard gray color in switchboard, janitors, heater and storage rooms.

4. Provide grounded metal barriers inside cabinet to isolate and separate line voltage and low voltage from each other inside the cabinet.

B. Cabinet Dimensions.

1. Unless indicated otherwise on Drawings.

   a. Shall be 20-inches wide. Surface or flush mounting as indicated.
   b. Recess mounted type shall have a 20-inches wide (maximum) recess metal enclosure with overlapping edge trim plate cover extending 1-inch on all sides of enclosure.

2. Depth shall be 5.75-inches nominal. Height of cabinet as required for devices, plus 25% spare unused interior space for future use, but not less than 36-inches high.

C. Terminals

1. Non-digital analog circuits; line and low voltage modular signal systems, 15-amp dual row with isolation barriers, screw-down terminals insulated strips, heavy duty.

   a. As manufactured by: Molex, or ITT-Cannon, or General Electric.

2. Digital circuits; low voltage signal systems, ANSI/ EIA/TIA Category-6, 110-Block or 66-Block gas-tight punch down style, heavy duty.

   a. As manufactured by: Leviton, or Ortronics, or AMP.

D. Identification (additional requirements)

1. Provide engraved nameplate on each cabinet indicating its designation and system (i.e., “Life Safety System - Panel 2LS”, etc.).

2. Identify each terminal landing with unique circuit number and provide corresponding alphanumeric text-index card inside panel access door

PART 3 - EXECUTION

3.1 MOUNTING

A. Flush mounted panelboards and terminal cabinets shall be securely fastened to at least two studs or structural members. Trim shall be flush with finished surface.

1. Panels and cabinets installed flush (recess or semi-recess) into fire rated or smoke rated walls. The wall recess shall be fully wrapped inside the recess with fire/smoke rated materials. The wrap-materials shall provide the same fire and/or smoke protection rating as the respective wall.

B. Surface mounted panels and terminal cabinets shall be secured to walls by means of preformed galvanized steel channels securely fastened to at least two studs or structural members.

C. Panelboards and terminal cabinets shall be installed to ensure the top circuit protective device (including top compartment control devices) are not more than 6-feet-6-inches above finish floor in front of the panel and the bottom device is a minimum of 12-inches above the floor. Manufacturer shall specifically indicate on Shop Drawing submittals each panel where these conditions cannot be met.

3.2 IDENTIFICATION (ADDITIONAL REQUIREMENTS)

A. Provide a red and white Bakelite nameplate with ½-inch high letters in each 277/ 480-volt panel fastened to face of dead-front plate, to read: “DANGER 480 (or as applicable) VOLTS KEEP OUT AUTHORIZED PERSONNEL ONLY”.

B. Manufacturer shall stencil the panel/cabinet number identification on the inside of door to correspond with the designation on the Drawings.

C. Identification plates and numbers shall be attached with screws or twist lock fasteners. Adhesive attachment of any kind shall not be used.

3.3 SPARE CONDUITS (ADDITIONAL REQUIREMENTS)

Provide three 1-inch conduit only stubs from each panel and terminal cabinet into accessible ceiling space. Where floor level below panel or terminal cabinet is accessible, also provide an additional three 1-inch conduit only stubs into accessible floor space.

END OF SECTION 26 24 16
010423/535050

SECTION 26 24 19

MOTOR CONTROL EQUIPMENT

PART 1 - GENERAL

1.1 SCOPE

A. Work Included: All labor, materials, appliances, tools, equipment necessary for, and incidental to, performing all operations in connection with furnishing, delivery and installation of the work of this Section, complete, as shown on the Drawings and/or specified herein. Work includes, but is not necessarily limited to the following:

1. Examine all other Specification Sections and Drawings for related work required to be included as work under Division 26.

2. General Provisions and Requirements for electrical work.

PART 2 - PRODUCTS

2.1 INDIVIDUAL STARTERS

A. Manual Motor Starters:

1. Provide flush or surface mounting manual motor starters with number of poles and size of thermal overload heaters as required for the motor being controlled (equipped with overload heaters, one for each motor lead). Back boxes shall be supplied with all flush mounting starters whether they are toggle type requiring only a 4-inch square outlet box or the larger type requiring a special box and cover designed to accept the particular unit.

2. Unless otherwise noted on the Drawings, all manual starters for single phase motors, smaller than 1 h.p., shall be the compact toggle type. Manual starters for all single-phase motors, 1 to 5 h.p., and all three phase motors up to 5 h.p. shall be the heavy-duty type.

3. Where manual motor starter is shown with pilot light, the pilot light shall be installed in a separate outlet box adjacent to the starter outlet, and engraved nameplate to indicate function of pilot light.

4. Motor starters as manufactured by the following:

Manufacturer	1hp and Below	Single-Phase Others
Arrow Hart	Type RL	Type LL
General Electric	CR 101	Class CR 1062
I.T.E.	Class C10, C11 or C12	Class C20
Square D Company	Class 2510, Type A	Class 2510, Type B & C
Westinghouse	Type MS	Type A100
Allen Bradley	Equal	Equal

B. Individual Magnetic Motor Starters:

1. Three phase magnetic motor starters NEMA Size 1 and larger controlling three phase motors 5 horsepower and larger shall provide integral motor single phasing protection. The starter shall automatically "open", turn off electrical power to the connected motor in the event of the loss of one or more circuit phases, lock out and require manual resetting of the single-phase protection to restart the magnetic motor starter. Provide single phase annunciator. Provide adjustable time delay, minimum range 0-3 seconds for initiating single phase shut down.

2. Magnetic motor starters shall be AC line voltage, across-the-line units in NEMA Type I enclosure, unless other types of enclosures are indicated.

3. All starters located outside of a building whether or not indicated shall be W.P. (weatherproof), and all starters noted W.P. shall be furnished in NEMA Type 4 cast or stainless-steel enclosures.

4. Starters shall be horsepower rated for the motor controlled and shall be equipped with properly sized overload elements. Every pole shall be with overload element.

5. Verify the exact motor current and voltage characteristics with the supplier of the motor before installation of a starter.

6. Each starter shall be equipped with "Hand-Off-Auto" switch or stop-start pushbutton as required.

7. Coils shall be designed to operate on voltage indicated on control diagrams and have built-in-under the voltage release for coil circuit to drop motor starter off the line when the line voltage drops below normal operating voltage.

8. The coil control circuit shall be independently fused, sized to protect coil.

9. Starters to be equipped with running pilot light indication with a "Push-to-Test" feature.

10. Magnetic starters shall have a minimum of two auxiliary contacts. Additional auxiliary contacts shall be provided as required to comply with the Requirements of the wiring diagrams on the Electrical, Mechanical and Plumbing Drawings and the description of the function in the Mechanical and Plumbing Sections of the Specifications.

11. Minimum starter size shall be NEMA Size 1 unless indicated otherwise.

12. Magnetic motor starters as manufactured by the following:

Manufacturer	Type
General Electric	Class CR 106
I.T.E.	Class A20
Square D Co.	Class 8536
Westinghouse	Type A200 (Size 4 Max.) or Class II-200 (Sizes

5 thru 8) Allen Bradley Equal

2.2 INDIVIDUAL COMBINATION MOTOR STARTERS

A. Combination starter shall incorporate fused disconnect switch and individual magnetic motor starter in a common enclosure. Combination starters shall be mounted in general purpose enclosures unless otherwise indicated on the plans. Provide oversized enclosures where required to accommodate the components and/or wiring indicated. Starters shall comply with NEMA Standards, size and horsepower as indicated on Drawings General Electric, Square D, Westinghouse or I.T.E.

B. The disconnect handle used on combination starters shall control the disconnect device with the door opened or closed. The disconnect handle shall be clearly marked as to whether the disconnect device is "ON" or "OFF", and shall include a two-color handle grip, the black side visible in the "OFF" position indicating a safe condition, and the red side visible in the "ON" position indicating an unsafe or danger condition.

C. Each starter shall be equipped with an integral control circuit transformer with secondary voltage or as indicated.

D. All starters used in combination starters shall be manufactured in accordance with the latest published NEMA Standards, sizes, and horsepower ratings. These starters shall be furnished with three melting alloy type thermal overload relays.

E. Thermal units shall be of one-piece construction and interchangeable. The starter shall be inoperative if a thermal unit is removed.

2.3 MOTOR CONTROL INTERLOCKS AND CONTROL DEVICES

A. Refer to Mechanical and Plumbing Drawings and Specifications and provide all control devices including timeswitches, relays and interconnection of starters as required.

B. Mount all relays and timeswitches in a separate NEMA 1 enclosure unless otherwise indicated.

C. Whether Shown on Mechanical and Plumbing Drawings or Control Center Schedules or not, where motors are controlled by external devices (i.e., thermostats, relays, float or pressure switches, etc.) or interlocked with other motors, each motor starter to be equipped with a "Hand-Off-Auto" selector switch in starter cover. Other starters equipped with a "Start-Stop" pushbutton station in starter cover.

D. Provide low voltage, 60Hz control power transformer(s), VA as required for HVAC and plumbing controls.

2.4 FUSES

A. Fuses shall be dual element, current limiting type, UL Class RK-5 unless otherwise indicated on the Drawings. Provide one spare set of fuses of each size and type in each motor control center.

B. Verify the full load amperes of all motors for which fuses are to be provided. Size fuses for the motor full load amps according to the recommendations of the Fuse Manufacturer.

PART 3 - EXECUTION

3.1 IDENTIFICATION

A. Manufacturer shall stencil the panel number or letter on each device and equipment section to correspond to identification on the Drawing.

B. Identification plates and numbers shall be attached with screws or twist lock fasteners. Adhesive attachment of any kind shall not be used.

END OF SECTION 26 24 19
010423/535050

SECTION 26 50 05

LIGHTING FIXTURES

PART 1 - GENERAL

1.1 SCOPE

A. Work Included:
All labor, materials, appliances, tools, equipment necessary for and incidental to performing all operations in connection with furnishing, delivery and installation of the work of this Section, complete, as shown on the Drawings and/or specified herein. Work includes, but is not necessarily limited to the following:

1. Examine all other Specification Sections and Drawings for related work required to be included as work under Division 26.

2. General Provisions and Requirements for electrical work.

1.2 SUBMITTALS (ADDITIONAL REQUIREMENTS)

A. General

1. Submit certification letter from Manufacturers of LED or lamps and ballasts and power/driver supplies, (or alternately, Manufacturer's published catalog data) stating/showing the specific LED or lamp, ballast, or power/ driver supply combination comply with Manufacturer recommendation and approval for the combined use, shown on the Drawings.

2. Provide complete Manufacturers catalog data information for each light fixture (luminaire), ballast, power/driver supplies, LED or lamps, materials, auxiliary equipment/devices, finishes and photometrics.

B. Performance Certification

1. Submit Manufacturer's Certified LED or lamp and ballast tests report data showing compliance with Contract Document.

2. Submit Manufacturer's letter of Certification for each fixture type, confirming the proposed combination of specific LED or lamp, ballast, power/driver supply and auxiliary components for each light fixture (luminaire) type will function together correctly and perform in compliance with the Requirements of the Contract Documents as follows:

"The proposed lamp(s), LED or lamp ballast(s), drivers, (where, applicable), lamp sockets and fixture have been tested as an assembly. The proposed fixture products assemblies are certified by the Manufacturer to function within the required temperature, lumen output, electrical characteristics and operational life described in the Contract Documents".

C. Light Fixture Samples

1. If requested by the Owner's Representative, provide a sample of each fixture proposed as a substitution for a specified fixture. Sample fixture shall be complete with specified lamps, 3-wire grounding "SO" cord and plug for 120-volt 60Hz, AC plug-in operation. Sample fixtures shall be delivered to the Owner's Representative's office for review, the samples shall be picked up within 10-working days after review comments have been received; any samples left beyond this time will be discarded by the Owner's Representative. Decision of Owner's Representative regarding acceptability of any lighting fixture is final.

1.3 QUALITY ASSURANCE (ADDITIONAL REQUIREMENTS)

A. Work and Materials shall be in full accordance with the latest Rules and Regulations as follows. The publications shall be included in the Contract Document Requirements. If a conflict occurs between the following publications and any other part of the Contract Documents, the Requirements describing the more restrictive provisions shall become the applicable Contract definition:

1. UL – Underwriters' Laboratory:

a. UL – 1572: HID Lighting Fixtures
b. UL – 1570: Fluorescent Lighting Fixtures
c. UL – 1029: HID Ballast
d. UL – 935: Fluorescent Lamp Ballast
e. UL – 542: Lamp Holders, Starters, and Starter Holders
f. UL – 8750 and 1598C: Light Emitting Diode – LED Equipment for use in Lighting Products and Replacements

2. NEMA – National Electrical Manufactures Association:

a. NEMA – LE4: Recessed Luminaries Ceiling Compatibility
b. NEMA – SSL #1, #3 and #6: Electronic Drivers for LED; LED and Incandescent Lamp Replacement
c. NEMA – LSD #44, #45, #49 and #51: SSL-Solid State Lighting

3. United States Federal Government:

a. FCC – Part 18: EMI and RFI emissions limitations.
b. EPA: Energy Conservation Publications and Waste Disposal Regulations.

4. ETL and C.B.M. Certified and Approved.

5. Electrical Installation Standards, National Electrical Contractors' Association:

a. NEIS/NECA and IESNA – 500: Recommended Practice for Installing Indoor Commercial Lighting Systems.
b. NEIS/NECA and IESNA – 501: Recommended Practice for Installing Exterior Lighting Systems
c. NEIS/NECA and IESNA - 502: Recommended Practice for Installing Industrial Lighting Systems.

6. Illuminating Engineering Society – IES (IESNA):

    a. IES – LM41: Photometric and Reporting.
    b. IES – 587: Surge Protection.
    c. IES – LM79: Solid State Lighting (SSL) Testing and Measurement.
    d. IES – LM80: Testing for Lifetime of LED.

7. ANSI-American National Standards Institute:

    a. ANSI – C81
    b. ANSI – C82
    c. ANSI – C62.41: Transient Withstand
    d. ANSI – C78: Lamps

8. State California Code of Regulations - Title-24 Energy Code

PART 2 - PRODUCTS

2.1 GENERAL

A. Complete Fixture

1. Provide light fixtures complete including LED or lamps, ballasts, drivers, lamp holders' sockets, housings, ceiling and wall trim "rings" for each ceiling type, mounting and adapter support brackets, diffusers/lenses and outlet boxes.

2. Include an allowance of $300.00 to provide a light fixture for each lighting fixture outlet shown on Drawings without a fixture type designation.

B. Specific Fixture Requirements and Fixture Schedule Information

1. The catalog numbers included in the description of the various types of lighting fixtures shall be considered to establish the type or class of the fixture with a particular Manufacturer only. The fixture length, number of lamps and lamp types, component materials, accessories, mounting type, ceiling, wall and install adapters, operation voltage, and all other components required to fulfill the total description of the fixture based on all Drawing information, branch circuits, voltages, Specification information, and shall be included in the Contract Requirements regardless of whether or not the catalog number specifically includes these components.

2. Lighting fixtures shall be the types as indicated in fixture schedule on the Drawings and as described in the Specifications.

3. All fixtures of the same fixture type shall be the same Manufacturer and of identical finish and appearance, unless indicated otherwise on Drawings.

C. Manufacturer Certification of Operation

1. Lamps and lamp ballasts and power supplies (drivers) shall be recommended and certified by the respective Manufacturer(s), to be "matched" to operate

correctly together, within the published characteristics, for efficacy, lamp starting, operating life hours, lumen output, power factor, power input, operating line ampere, sound intensity, and temperature.

2.2 BALLASTS AND POWER SUPPLIES (FOR HID LAMPS AND FLUORESCENT LAMPS AND DRIVER-POWER SUPPLIES FOR LED-SOLID STATE LAMPS)

A. General

1. All ballast, power supplies, lighting fixtures assemblies and components shall be ANSI, ETL approved C.B.M. Certified, and UL labeled.

2. Ballasts shall provide Class "P" thermal protection.

3. Ballasts shall comply with FCC Part 18 Class-A and NEMA limits as to EMI or RFI and not interferes with normal operation of electrical or electronic data processing equipment.

4. Open circuit voltage, starting voltage, crest voltage and lamp-operating voltage shall comply with Requirements of the respective Manufacturer of the installed lamps.

5. Lamp ballasts, power supplies and transformers shall be for use with the specific lamps provided as part of the Contract.

6. Shall be suitable for use with automatic occupancy motion sensing type switching "on-off" control systems, with multiple "on-off" cycles per hour, on a 24-hours a day basis. Operation shall be without loss of performance in operating characteristics described in the Contract Documents.

7. Fusing

   a. Shall be independently fused on the incoming line side within the fixture compartment.
   b. Alternately the Ballast Manufacturer may install the equipment fuse inside the ballast/power supply.
   c. Provide a label next to ballast cover reading: "Ballast (Power Supply) is fused, check fuse prior to relamping". Provide an additional quantity of 10% spare fuses and deliver to Owner’s Representative.

8. Ballast Sound Rating Class-A or better. Where sound-rating classification is not published, the ballast sound rating shall be the best of product manufactured. Ballasts, which are judged by the Owner’s Representative to be excessively noisy, shall be removed and replaced at the Contractor's expense with low noise ballasts.

9. Electronic solid-state ballasts and power supplies shall be the product of Manufacturer that has been producing electronic ballasts/power supplies for a minimum of 5-consecutive years prior to the date of the Contract.

10. Shall be designed and supplied to operate on the incoming line voltage system circuits to which the respective light fixtures are connected.

11. Shall not contain any PCB (polychlorinated biphenyl).

12. Power factor shall be not less than 0.90, starting and operating. The input starting transient line input ampere should never exceed lamp normal operating ampere by more than 10%.

13. Ballast and power supply disconnect:

    a. Lighting Fixture Manufacturer factory installed and prewired inside each light fixture, for lamp-ballast or lamp-driver power supply.
    b. Shall comply with UL-2459 and CEC/NEC. Shall disconnect (load-break) energized or de-energized ballast/driver from respective line voltage circuit and dimming circuit. UL-94V-0 flame retardant.
    c. Hot pluggable, multi-pole, insulated connectors, with strain relief and finger-safe squeeze-to-release latching function.
    d. Suitable for available voltage and ampere dimming and non-dimming lamp-ballasts and lamp-power supplies.

14. Ballast and power supplies as manufactured by General Electric, Advance, Philips, Universal, Sylvania/Osram or equal.

B. Solid-State Electronic Fluorescent Lamp Ballast

1. Fluorescent ballasts shall be solid-state electronic type ANSI C82.11.

2. Ballast shall operate lamps at voltage frequency exceeding 40kHz, without visually detectable flicker, flicker index shall not exceed 3%. Shall deliver Lamp Manufacturers normal rated lamp life.

3. Ballast normal operations and life expectancy shall not be affected by lamp failure or sustained open circuit/short circuit.

4. Ballast shall be surge and transient protected to 6000 volts, ANSI-C62.41, Category-A.

5. Maximum Total Harmonic Distortion (THD) created by operation on the line (input) side of the ballast shall not exceed 10%.

6. The ballast shall provide an isolated output to the lamps. Metal ballast case shall be positively grounded to the light fixture metal housing.

7. The ballast shall incorporate surge protection device to prevent damage to the ballast due to line side transients.

8. The ballast lamp current crest factor shall be 1.7 or less (ratio of peak to RMS current).

9. The Ballast Factor (BF) shall be not less than the following unless indicated otherwise on the Drawings.

    a. 0.87 BF for normal light output.
    b. 0.95 BF for High light Output (HO) operation.

c. 1.0 BF for dimming ballast.

10. Normal rapid start (continuous full filament voltage) Rapid Start - Rapid start ballast shall energize (preheat) the lamp cathode “heater” filament prior to establishing the lamp arc ignition, normal lamp operation shall occur within 1-second after starting. The ballast shall provide approximately 15,000-lamp start “on-off” cycles prior to lamp failure.

11. Instant start - Instant start ballast shall energize the lamp with an initial increased voltage to initiate the lamp arc discharge between the unheated (no preheat) lamp cathodes and ensure the lamps start without delay or flashing, eliminate lamp operating power required for cathode heating. Preheating the lamp cathodes shall not be performed by the ballast. The ballast shall control the lamp start “on-off” cycles to provide approximately 10,000 starts prior to lamp failure.

12. Program Start - Integrated Circuit (IC) program start ballast shall energize (preheat) the lamp cathode “heater” filament for a programmed time duration prior to transition phase to lamp arc ignition and immediately de-energize the cathode after arc is established and lamp is operational. The ballast shall precisely control the cathode temperature and duration to increase lamp start “on-off” cycles prior to lamp failure to approximately 35,000 starts. The ballast shall reduce the “black-end” lamp condition resulting from frequent lamp “on-off” cycles. The Program Start ballast shall provide automatic End of Life (EOL) lamp current shut-off when a lamp fails.

13. DALI ballast, 1-lamp, 2-lamp, 3-lamp, or 4-lamp, dimming and switching capacity. Comply with DALI published control and communication protocol standards. Universal input line voltage operation.

C. Solid-State Electronic Metal Halide Lamp Ballast

1. Solid-state electronic for low wattage "pulse-start" metal halide type lamp operation.

2. Lamp current crest factor (ratio of peak to RMS current) shall not exceed 1.5.

3. Operate lamps at a frequency of less than 200Hz to minimize acoustic resonance inside the lamp arc tube and minimize lamp flicker.

4. Ballast Factor (BF) shall be 1.0.

5. Automatic ballast thermal protection and automatic shutdown at End of lamp Life (EOL) protection.

6. Total Harmonic Distortion (THD) on the input line side shall not exceed 16%.

D. Dimming Ballasts and Lighting Control System Ballasts

1. General

a. The light fixture ballasts shall comply with the recommendations of the Lighting Control System Manufacturer, as to ballast type and Ballast

Manufacturer sources. Provide documentation with Shop Drawings certifying compliance with the Requirements.

b. DALI ballasts shall comply with the recommendations of the DALI Lighting Control System Manufacturer. DALI ballast types and DALI Ballast Manufacturer sources shall comply with the recommendation with the Shop Drawings certifying compliance with these Requirements and Recommendations.

2. Fluorescent lamp dimming

a. One or multi-lamp rated dimming ballast shall be provided for fluorescent lamp dimming systems, as recommended by the Lighting Control System Manufacturer.

E. Emergency Lighting

1. Light fixtures shown connected to both normal power and external emergency power branch circuits, shall be furnished with separate lamp ballasts for the normal and emergency power circuits.

2. The ballast(s) for the lamps connected to the external emergency branch circuit shall be in a separate wireway isolated and barriered from the ballast(s) for the lamps connected to the normal power branch circuits. The fixture shall be factory labeled "emergency" and "normal" on the respective wireways and ballasts.

F. Tandem Ballast Connections

1. Ballasts in 1-lamp or 3-lamp fluorescent fixtures, when fixture is recessed mounted and within 8-feet of each other, or if surface on pendant mounted within 1-foot of each other, shall be furnished with a tandem wiring harness connected to inboard Ballasts of master fixture, to be field connected to inboard ballast of adjacent fixture. Night-light or emergency light fixtures shall be exempt from this Requirement.

2.2 LAMPS

A. General

1. Lamps shall be new, of wattage and type indicated. Each fixture or lighting outlet shall be supplied with the proper lamp(s).

2. Lamps shall comply with the characteristics as described in the lamp tables below, except where indicated otherwise on the Drawings.

3. Lamps shall comply with limits on mercury and classification as non-hazardous waste as follows:

a. Federal EPA – Toxicity Characteristics Leaching Procedures (TCLP).
b. State of California – Total Threshold Limit Concentration (TTLC).

4. Lamps shall be as manufactured by General Electric, Philips, Osram or Sylvania.

B. Incandescent Lamps

1. General-purpose incandescent "A" style lamps shall be inside frosted, medium base for 200 watts and smaller.

2. Reflector lamps shall be PAR-20, PAR-30 or PAR-38 as required, unless otherwise specified in fixture schedule.

3. Incandescent lamps in non-enclosed fixtures and fixtures without lens/ diffuser shall be rated for "open" fixture operation.

C. Fluorescent Lamps

1. Linear fluorescent shall be energy saving type and bi-pin operation. Rapid-start, Program Start or Instant Start as indicated in the Contract Documents.

2. Compact fluorescent lamps.

3. Average lamp life shall not be less than the following, based on 3 hours "on" operation and 20-minute "off" for each start cycle, when matched in combination with the specific lamp ballast and with the respective light fixture, unless noted otherwise:

   a. Linear fluorescent 20,000 hours.
   b. CFL – 20,000-hours and as noted in the lamp tables.
   c. HID – as noted in the lamp tables, based on 12-hours "on" operation for each start cycle.
   d. Incandescent – as noted in the lamp tables.

D. High Intensity Discharge Lamps HID

1. Mercury vapor lamps shall be Deluxe White or Brite White Deluxe phosphor coated Bonus-Line.

2. Provide proper base up, base down, horizontal, operating configuration for the fixture and lamps being furnished.

3. HID lamps (indoor or outdoor locations).

   a. HID lamps used outdoors or in damp/wet locations shall only be used in fully enclosed, lensed fixtures.
   b. Open type fixtures with HID lamps used indoors shall only be ANSI- “TYPE-0” protected lamps and protected lamp sockets or shall only be fully enclosed, lensed fixtures.
   c. Enclosed/lensed fixtures with HID lamps, shall be rated for “ARC-TUBE Containment”

4. Lamps in non-enclosed light fixtures shall be equipped with automatic switching device to de-energize the lamp when the lamp outer glass envelope is broken.

5. High-pressure sodium lamps shall be clear unless noted otherwise on Drawings.

6. Metal halide lamps shall be clear or coated as indicated on the Drawings.

7. Lamp socket and lamp “burning” position of operation rating (i.e., base-up, base-down, horizontal) shall comply with the actual lighting fixture installation location.

2.3 LIGHT FIXTURES (LUMINAIRES)

A. General

1. Lighting fixtures shall have all parts, ballasts, drivers, sockets, support attachments, trim flanges and fittings necessary to complete and properly install the fixture at the indicated installation locations. All fixtures shall be provided with lamps of size and type specified.

2. Ceiling and/or wall surface mounted lighting fixtures shall not have any exposed chase nipples or conduit knockouts visible to view within fixture housing. Lighting fixtures mounted in continuous rows shall have chase nipples or conduit knockouts between lighting fixture housing but shall not have visible chase nipples/conduit knockouts on the visible ends of the continuous row of lighting fixtures.

3. Where fixture color is indicated to be selected by the Architect and/or Owner’s Representative, provide two color chip samples for each color for review.

4. Recessed fixtures with attached junction box shall be provided with a junction box permanently attached to the plaster ring so that the junction box is accessible through the fixture opening when the fixture is removed. Connection between fixture and pull box shall be flexible metal conduit with not less than 16AWG "AF" or "CF" type fixture rated copper wires, high temperature wire insulation for not less than 600 volts AC. The flexible conduit shall be sufficient length, so that when the fixture is removed, the pullbox is readily accessible.

5. Recessed fixtures shall be Underwriters' Laboratory approved for recessed installation with plaster frame and attached pullbox. Lamp enclosure, reflectors and finish wiring shall not be installed until plastering is completed. Exposed finish trim shall not be installed until finish painting of the adjacent surface is completed.

6. The fixture shall bear Underwriters' Laboratory label of approval for the wattage and installation indicated.

7. Light fixtures installed outdoors, in damp or wet locations shall be UL labeled for said location as "damp-location" and "wet-location" for the respective installation location.

8. Fixtures in contact with thermal/building insulation shall be UL listed and rated for direct contact installation in thermal insulation systems.

9. Lamp auxiliary support brackets shall be heat-resistant, non-dielectric. Alternatively, metal auxiliary lamp support brackets shall be electrically isolated from the fixture, to prevent glass decomposition.

10. Lighting fixtures installed in masonry and/or concrete construction. The fixture housing shall be rated for "concrete-pour" installation location.

11. Provide a permanent label inside each light fixture stating the following relamping information. Not less than 0.125-inch-high black alphanumeric characters on white background.

    "Replacement lamp(s) installed in this light fixture must comply with the following criteria:

    **: CRI *: Lamp Watts*
    **: CCT-K *: Lamp Lumens*

    *Only lamp rated * type lamp ballast shall be installed in this fixture.*
    **Insert the value required for the specific lamp required by the Contract Documents for each light fixture.*

B. Lens and Diffusers

1. Acrylic plastic or Plexiglas for the light fixture diffusers or fixture lenses shall be 100% virgin material.

2. Thickness of not less than 0.125-inch, as measured at the "THINIST" portion on the diffuser or lens. However, thickness shall be increased to sufficient construction and camber to prevent the lens and diffusers from having any noticeable sag over the entire normal life of the installation.

3. Diffusers shall be formed from cast sheet by a vacuum and/or pressure technique.

4. Lighting fixtures containing lamps with dichroic reflectors and light fixtures with non-dichroic lens/diffuser shall be rated for high temperature lamp operations resulting from lamp heat redirected (reflected) back into the fixture.

C. Fixture/Luminaire Internal Wiring

1. Provide wiring between fluorescent lamp holders and associated operating and starting equipment. Provide ballasts/transformers inside lighting fixture.

2. Where there are two or more fluorescent lamps in a single luminaire, and multiple level intensity control is indicted on Specifications or Drawings, multiple-lamp ballasts shall be used to the greatest extent possible and the following tandem wiring configurations shall apply:

    a. If "inboard-outboard" wiring or multi-intensity light switching controls are specified for (odd-quantity) multi-lamp luminaires, then the two outboard lamps shall be connected to a single 2-lamp ballast within each luminaire. The inboard lamps of two adjacent luminaires shall be tandem wired, that is, connected to a 2-lamp ballast within one of the luminaires.
    b. A 1-lamp ballast may be used if a luminaire with ballast is separated by more than 10-feet from any other same type of luminaire with a ballast or if the nearest luminaire is on another control circuit. Otherwise, a lamp in one

luminaire shall be tandem wired, that is, connected to a multi-lamp ballast in another luminaire.

3. Wire insulation for ballast/lamps employing igniters, shall be rated and UL listed for the igniter pulse voltage.

4. Light fixture internal lamp sockets; installation of lamp sockets and ballasts; grounding of lamp sockets and ballasts; and wiring connections, shall all comply with the recommendations of Ballast Manufacturer and Lighting Control System Manufacturer.

D. Lamp Holders (Sockets) and Supports

1. Provide fluorescent luminaire lamp sockets that are white, constructed of high temperature heat-resistant plastic or ceramic/porcelain.

2. When electronic solid-state ballasts are provided, fluorescent lamp sockets for 4-feet-0-inches lamps shall be of the "knife edge" type. The lamp sockets providing the tightest electrical connection shall be furnished.

3. Lamp supports shall be used as recommended by Lamp Manufacturer.

4. Rigidly and securely attach lamp holder to the luminaire enclosure.

5. Provide lamp holders and sockets suitable for specified lamps and position the lamps in optically correct spacing and relationship to lenses, reflectors, filters, and baffles.

6. Lamp holder location shall provide properly located starting aid, as specified by the Lamp Manufacturer.

7. Lamp sockets in fixtures shall be compatible with the respective specified lamp(s), as recommended by the Lamp Manufacturer and shall provide specified lamp operational performance.

8. Provide horizontal position (±15-degree) lamp and lamp socket to automatically ensure lamp position, for lamps requiring horizontal only operation lamps, to ensure correct horizontal lamp install position.

9. Lamp sockets shall be rated for not less than actual volts of the igniter starting of the lamp.

2.4 SOLID STATE LIGHTING (SSL), LIGHT EMITTING DIODES (LED) LAMPS, POWER SUPPLIES, AND LIGHT FIXTURES (ADDITIONAL REQUIREMENTS)

A. General

1. Solid State LED light source (lamps), related control equipment (driver-power supply), and luminaire (light fixture) optics for light output distribution.

2. Shall comply with the US-DOE Energy Star Program for SSL-LED. Submit documentation with Shop Drawings.

3. Shall comply with the latest revision IESNA LM-79 and LM-80. Submit documentation with Shop Drawings.

4. SSL chromaticity shall comply with latest revision NEMA and ANSI – C78.377. Submit documentation with Shop Drawings.

5. Submit with Shop Drawings two samples of each light fixture type employing SSL, with prewired 120 volt, 60Hz AC “SO” cord and plug-in cap.

B. LED Lamps

1. Lamp lumen output and overall efficiency shall be based on the LED lamps installed in specified fixture and ambient operating temperature.

2. Lamp Color Rendition Index (CRI) shall equal or exceed CRI – 80, unless noted otherwise on Drawings.

3. Lamp color output shall be 4000-degree K (±100K), unless noted otherwise on Drawings.

4. CRI and lamp color temperature shall be same for all light fixtures of the same fixture type.

C. LED Power Supply (driver)

1. Combination of power supply and SSL – lamp shall be tested and certified by respective Manufacturers for performance and proper operation.

2. Provide dimming type driver where indicated on Drawings. Driver and dimming equipment shall be tested and certified by respective Manufactures for performance and proper operation.

D. Self-contained LED Lamp and Driver, integral “Screw-Base” and/or “Pin-Connect”, replacement assembly for incandescent lamps.

1. Shall be dimmable. Dimmer and lamp shall be certified by respective Manufacturers for compatible correct operation with each other.

2. Optical system and operating temperature thermal performance shall be compatible with light fixture.

3. Comply with latest revisions of NEMA LSD-49 and SSL-6.

2.5 LIGHTING STANDARDS (SUPPORT POLES, POLE MOUNTED LIGHTING FIXTURES AND LUMINAIRES)

A. General

1. Lighting poles, pole bases, pole arms, lighting fixtures (luminaires), supports with all lighting pole attachments and anchors shall be designed and constructed to withstand not less than 100 miles per hour steady horizontal wind loading and

130 miles per hour horizontal wind gust loading, without any damage to the lighting standards.

2. Provide tamper-resistant "hand-hole" and cover on the pole, for access into wiring terminations inside the pole. Provide ground "lug" attachment for equipment bond conductor.

3. Provide factory applied weather protective base undercoat and final finish on all exposed and internal components. Color as indicated or as selected by Owner's Representative.

B. Base Plate

1. Provide a base plate at the bottom of each pole to attach and secure the pole to the pole anchor bolts. The base plate shall be permanently attached to the bottom of the pole.

C. Anchors

1. Anchor bolts shall be threaded the entire bolt length, not less than four bolts for each pole equally spaced around the pole base. Provide a minimum of two threaded nuts for each anchor bolt. Install a nut on the top and bottom sides of each base plate anchor bolt location. Not less than four threads shall be exposed after pole is installed and leveled.

PART 3 - EXECUTION

3.1 LIGHT FIXTURE INSTALLATION

A. General

1. The Contractor shall verify actual ceiling and wall construction types as defined on the Architectural Drawings and furnish all lighting fixtures with the correct mounting devices, trim rings, brackets whether or not such variations are indicated by fixture catalog number. The Contractor shall verify depth of all recessed lighting fixtures with Architectural Drawings prior to ordering fixtures. Any discrepancies that would cause recessed lighting fixtures not to fit into ceiling shall be reported to the Owner's Representative prior to release of order to the Supplier of the fixtures.

2. On acoustical tile ceilings, fixture outlets shall be accurately located in the center, at the intersection of the four corners or at the center of the joints of two tiles.

3. The Contractor shall aim the exterior adjustable lighting fixtures after dark in the presence of, and at a time convenient to the Owner's Representative.

4. Fixtures shall be ordered and furnished to operate correctly on the branch circuit voltage connected to the respective fixture as shown on the Site Plan and Floor Plan Electrical Drawings. The voltages shown on the fixture schedule are for generic fixture information only.

5. Install and connect lighting fixtures to the circuits and control sequences indicated on the Drawings and to comply with respective Manufacturer's instructions/recommendations.

6. Lighting fixtures in building interstitial spaces, in mechanical plumbing and electrical spaces/rooms, are shown in their approximate locations. Do not install lighting outlets or light fixtures until the mechanical, plumbing and electrical equipment/pipes/ductwork are installed; then adjust and install lighting in revised clear (non-interfering) locations to provide best even-illumination. Coordinate the locations with all other trades prior to lighting

B. Lighting fixtures installed in ceiling support grids - suspended lay-in "T-bar" and concealed spline ceilings.

1. Provide two seismic clips at opposite ends of each recessed light fixture, the clip shall connect to the ceiling grid main runners and the light fixture. The light fixture with seismic clips and ceiling grid runner connections shall resist a horizontal seismic force equal to the total weight of the light fixture assembly.

2. Each light fixture weighing 40-pounds or less and where the respective ceiling grid system is "heavy duty" type, shall be suspended directly from the ceiling grid or shall be suspended independent of the ceiling grid support system as approved by the AHJ. Each light fixture weighing more than 40-pounds or where the ceiling grid system is not a "heavy duty" type shall be supported independent of the ceiling grid and independent of ceiling grid support system.

3. Each light fixture supported independent of the ceiling grid system shall be supported with a minimum of four taut independent support wires, one wire at each fixture corner.

4. Each light fixture supported directly from the ceiling grid or ceiling grid support system shall be additionally connected with a minimum of two independent slack safety support wires. One wire at each opposite diagonal fixture corner. Each 3-feet by 3-feet and larger light fixture shall be supported in the same manner, except provide a minimum of four independent slack safety wires, one at each fixture corner.

5. Light fixtures surface mounted to a suspended ceiling shall be installed with a 1½-inch steel – "C" channel which spans across and above a minimum of two parallel main ceiling grid "runners" and concealed above the ceiling. Each channel or angle member shall be provided with a minimum of two threaded studs for attaching to the fixture housing through the lay-in ceiling tile. Two steel "C" channel members shall be installed for each 4-feet (or smaller) fixture. Install the channels within 6-inches of each end of the light fixture to span a minimum of two ceiling grid parallel main runners. Provide two seismic clips connecting the ceiling grid main runners to each steel – "C" channel. Provide a not less than two taut independent support wires connecting to each channel. Bolt the light fixtures to the threaded studs on the channels or angles, to support the light fixture tight to the ceiling surface.

C. Fixture Supports

1. The support wires for light fixture support shall be 12-gauge steel (minimum). The wires including their building and light fixture attachments shall provide support capacity of not less than four times the weight of the light fixture assembly. Provide additional light fixture support wires and building anchors to meet these Requirements, as part of the Contract. The support wires shall be anchored to the building structural elements above the ceiling.

2. Pendant mounting fixtures shall be supplied with swivel hangers. Fixtures shall swing in any direction a minimum of 45 degrees of gravity, position. Fixtures shall have special stem lengths to give the mounting height indicated on the Drawings. Stem to be single continuous piece without coupling, and to be finished the same color as the canopy and the fixture, unless otherwise noted. The Contractor shall check all lock nuts and set screws to rigidly secure the swivel socket to the stem, and the stem to the outlet box.

   Fixtures shall be plumb and vertical. Where obstructions occur restricting 45-degrees free-swing of fixtures, the fixtures shall be "guy" wired to prevent fixtures from striking obstructions. The Owner’s Representative shall approve method of guying. Swinging fixtures shall have an additional safety hanger cable attached to the structure and the fixture at each support, with the capacity of supporting four times the vertical weight of the light fixture assembly.

3. Suspended fixtures weighing in excess of 40-pounds shall be supported independently of the fixture outlet box. Provide "aircraft" (minimum 12 gauge) steel hanger cable for suspended fixtures route cable concealed or in pendant where possible. Each cable attachments shall support four times the weight of the fixture assembly. Securely attach the cable to the building structure.

4. Surface mounted fixtures installed on drywall or plaster ceilings and weighing less than 40-pounds may be supported from outlet box. Provide structural supports above drywall or plaster ceilings for installation of fixtures weighing more than 40-pounds and secure fixture to structural supports. The use of toggle bolts is prohibited.

C. Recessed Lighting Fixtures - Fire Rated Building Surfaces

1. Lighting fixtures recessed in ceiling or wall which has a fire resistive rating of 1-hour or more shall be enclosed in a fully enclosed backbox (except over fixture lens/diffuser). The material used to fabricate the "enclosed backbox" shall have a fire rating equal to that of the respective ceiling or wall.

2. The space from the fixture to the box enclosure shall be a minimum of 3-inches.

3. The backbox shall be concealed behind the fire rated ceiling and wall finish surface. The light fixture shall be provided with lamp ballast rated for (normal light output) operation in a "high" ambient temperature.

3.2 LAMPS

A. Fluorescent and HID lamps controlled by dimming equipment shall be operated (aged) for 100-continuous hours without interruption, at 100% full lumen output prior to occupancy of the building by the Owner.

B. Lamps shall be the type and Manufacturer as recommended by the Dimming System Manufacturer.

C. Install all lamps in each light fixture.

D. Lamp and light fixture use during construction:

1. All lamps in lighting fixtures that have been operated (ON) for a total of more than 300-hours prior to final completion of the Contract Notice of Completion shall be relamped by the Contractor. Remove the existing lamps with more than 300-hours of illuminated operation and provide new lamps of the type required by the Contract Documents, install lamps in respective light fixtures, typical for the following lamp types:

a. Linear fluorescent.
b. Compact fluorescent (CFL).
c. H.I.D.
d. Incandescent.
e. LED

3.3 LENS AND DIFFUSERS

Lens, diffusers, internal reflectors shall be completely cleaned of all dust, dirt and fingerprints after the installation of the light fixtures and lamps, and after all trades have completed work and prior to occupancy of the facility by the Owner.

3.4 BALLASTS

A. Ballasts remote from the lighting fixture, mounted as shown on the Drawings and designed for remote operation. Additional wiring and conduit shall be provided whether shown on the Drawing or not, between lighting fixture and remote Ballasts with required quantity of "THHN" wire installed in conduit to operate said fixture(s).

B. Provide proper type and quantity of conductors with conduit system for proper operation of dimming system, whether or not shown on Drawings.

C. Contractor shall tandem wire 1-lamp or 3-lamp fluorescent fixtures when fixture is recessed mounted and within 8-feet of each other or if surface or pendant mounted within 1-foot of each other. To accomplish tandem wiring, a tandem wiring harness shall be installed between inboard master ballast and inboard slave lamp located in adjacent fixture. Night-light or emergency light fixtures shall not apply.

3.5 FLUORESCENT LIGHT FIXTURE TANDEM WIRING CONNECTIONS

A. The Contractor shall provide tandem wiring whether or not shown on the Drawing for fluorescent lighting fixtures conforming to all of the following criteria:

1. Light fixture contains fluorescent lamp ballast.

2. Odd number of lamps in light fixture (i.e., one lamp, three lamps, five lamps, etc.).

3. Light fixtures are recess mounted within 10-feet of each other; light fixtures are surface mounted or suspended/pendent mounted within 1-foot of each other.

4. Light fixtures are located in the same room.

B. Provide the tandem wiring connections between respective light fixtures as follows:

1. The tandem wiring harness shall be the product of the respective Lighting Fixture Manufacturer.

2. The tandem connection shall provide pre-assembled wiring harness connecting two fluorescent lamps in adjacent lighting fixtures with a master lamp ballast, remote adjacent fixture slave lamp.

3. The wiring harness shall contain the wiring in flexible steel conduit or enclosed metal raceway/jacket for installation in an air plenum.

C. Delete Tandem Wiring Requirement and provide Individual and Multi-Lamp Ballasts in each respective light fixtures under one or more of the following conditions.

1. Lighting fixtures are shown as night-light or emergency light type fixtures do not require tandem wiring.

2. Fluorescent Dimming Ballasts do not require tandem wiring.

3.6 COMMISSIONING LIGHTING FIXTURES (ADDITIONAL REQUIREMENTS)

A. General

1. Verify correct lighting control configurations and operation in each room.

2. Simulate normal source power failure by "opening" (turn off) building main service disconnect and verify connections and operation of each emergency lighting fixture.

3. Confirm "EXIT" sign directional arrows are visible in each "EXIT" sign.

4. Verify light fixture support-hangers, ceiling grid clips and seismic restraints comply with the Contract Documents.

5. Remove protective shipping/installation shields on fixtures. Verify fixtures and lamps are clean and free of construction debris. Clean light fixtures found to be contaminated or dirty.

6. Setup, program, and function test lighting control systems to perform each of the indicated control functions, area/room zones and sequences.

7. Provide “aiming”, directional adjustment of light fixtures, both indoor and outdoor. Aiming shall comply with Manufacturer’s aiming diagrams, and as directed by Owner’s Representative.

B. Sample spot-checks in each room the following lighting fixture information:

1. Lamp type and performance data.

2. Ballast type and performance data.

3. Combined lamp/ballast certification of performance and compatibility by respective Manufacturer.

4. Verify instructional signage is placed inside each lighting fixture in compliance with Contract Documents.

END OF SECTION 26 50 05
010423/535050

SECTION 28 46 20

FIRE ALARM

PART 1 – GENERAL

1.1 SCOPE

A. Work Included: All design, labor, materials, appliances, tools, equipment necessary for and incidental to performing all operations in connection with furnishing, delivery, and installation of the work of this Section, complete, as shown on the Drawings and/or specified herein. Work includes, but is not necessarily limited to the following:

1. Examine all other Specifications Sections and Drawings for related work required to be included as work under Division 26.

2. General Provisions and Requirements for electrical work.

1.2 SUBMITTALS (ADDITIONAL REQUIREMENTS)

A. Submit State Fire Marshal and UL Listing numbers for each piece of equipment and component.

B. Submit Block Wiring Diagrams Showing Major System Components, alarm and signaling stations, battery load calculations, and circuit voltage drop calculations with interconnecting circuit conductors and conduits. Riser type diagram shall be provided if the building has more than one floor level with information shown on riser diagram on each respective floor.

C. Submit Redrawn Building Floor Plan for each building area, same scale as the Contract Drawing. Drawings shall be on reproducible sepias. Plans shall show walls, doors, room names and numbers, windows, fire and smoke barriers, and all fire alarm system equipment locations. Show interconnecting conduit, conduit sizes, wire size and quantity between all components.

D. Submit Manufacturers Standard Catalog Data for Fire Alarm Components. The submittal shall be arranged in the order of the Specification and shall list the Specification paragraph number, the name, the proposed model and Manufacturer for each item as well as a reference indicating the specific piece of data which can be easily located in the brochure. The Manufacturer's data sheets shall be marked to indicate the specific item being proposed in cases where the sheet covers several types or sizes of item. The data sheet shall completely describe the proposed item. Where modification to the equipment is necessary to meet the Operational Requirements of the Contract Documents, the brochure shall include complete Mechanical and Electrical Shop Drawings detailing the modification. The brochure shall include a listing of the outlet rough in needed for every device and equipment item. The applicable symbol, which illustrates that rough-in item on the Job Plans, shall be drawn on the proposal, opposite the description of the rough in to facilitate locating the data by Field Personnel. Submit elevation and dimensional information.

E. Submit Battery Sizing Calculations.

F. Submit Voltage Drop Calculations on Worst Case Signal and Control Circuits.

G. After Review of Submittal by Architect, the Contractor shall submit to the local authorities for approval.

1.3 APPLICABLE STANDARDS

A. The fire alarm system devices shown on the Drawings do not include all the devices/ components/raceways/connections, etc., of a completely designed and engineered fire alarm system. The fire alarm system has not been submitted for review and approval by the AHJ as a complete system. The devices (if any) shown on the Drawings are to show additional devices that may exceed the Minimum Requirements of the AHJ and to define locations of selected specific significant components. However, the Drawings do not represent all the components and work required for a complete and operable fire alarm system.

B. The Contractor shall provide design engineering services and shall provide all material and labor for a complete and operable fire alarm system. The Contractor shall submit the fully designed and engineered fire alarm system to the AHJ for review and approval as a Deferred Approval fire alarm system. All the costs for Design Engineering, AHJ review approval, material and labor for a complete and operable fire alarm system shall be included in the Contractor's Contract.

C. The Requirements of Building Permits and Requirements of the AHJ to Proceed shall become a part of the Contract Documents. The Fire Alarm Building Permits and AHJ Approval to proceed shall be obtained by the Contractor.

D. Prior to Commencement of Work and After Completion of Work, the Contractor shall provide Written Notification to the AHJ.

1.4 APPLICABLE STANDARDS

A. The Equipment shall be listed, labeled, and approved for the application shown in Contract Documents, as fire alarm equipment complying with Requirements of

1. NFPA 72, National Fire Alarm Code.

2. NFPA, 90A. Installation of air conditioning and ventilating systems.

3. UL and the California State Fire Marshal.

4. Local Codes and authorities having jurisdiction.

5. N.E.C. Article 760.

B. Written certification by the Fire Alarm Equipment Manufacturer shall be submitted to the Architect, stating that the system and its component parts are listed and approved by the State Fire Marshal and the installation has been tested, is operational and conforms to the Requirements as set forth in Part 3, Article 24, Title 19, California Administrative Code.

1.5 EQUIPMENT QUALIFICATIONS

A. The Equipment shall be as manufactured Simplex Time Recorder Co., Notifier, Honeywell, Pyrotronics, or Gamewell.

B. The Supplier of the Equipment shall be the Factory Authorized Distributor and Service Facility for the brand of equipment provided.

PART 2 – PRODUCTS

2.1 GENERAL SYSTEM OPERATION

A. System shall be microprocessor-based, addressable, and power-limited with Class A or Class B supervised circuits.

1. The microprocessor shall execute all supervisory and control programming to detect, report the failure or disconnection of any system module or peripheral device and initiate programmed control sequences. An isolated supervision "watchdog" circuit shall monitor the micro-processor and, upon failure, shall activate the system trouble circuits.

2. The automatic fire detection and alarm system shall consist of main control panel, evacuation alarms, remote annunciator, automatic detection devices, and manual stations, installed and wired in accordance with the Drawings and shall function as specified herein.

3. The system shall be programmable in the field, by a non-computer-trained person. All programmed information shall be stored in non-volatile memory.

4. The system shall operate both addressable and non-addressable ionization, thermal and photoelectric detecting devices, manual stations, water-flow switches, and external control modules.

5. The control panel shall provide power, annunciation, supervision and control for the fire detection and alarm system. The system shall be designed such that alarm indications override trouble and control conditions.

6. External circuit supervision shall not require additional wires other than the pair used for detection or alarm (only two wires shall be used from the control panel to each loop of initiating devices and two wires for the audible devices). These two wires shall provide both supervision and alarm signals. There shall be no loss of supervision for Class "B" wired addressable devices. Class "A" supervision may be provided by adding an additional pair of wires.

B. Alarm Conditions

1. Actuation of any manual or automatic alarm-initiating device, connected to the system shall cause the following automatic functions.

a. All alarm evacuation signaling units shall activate continuously.

b. The respective zone alarm lamp or annunciator alphanumeric readout on the central control panel, and remote annunciator panel, shall be activated.
c. Activate the central alarm system.

2. Actuation of HVAC air duct smoke detectors shall cause the designated fans and motors with HVAC air duct smoke detectors to stop, in the air distribution system of the building.

3. Actuation of automatic self-contained fire/smoke doors/hatches or of smoke detectors on either side of smoke/fire doors/hatches shall energize the release mechanism on the smoke door causing all fire/smoke doors to close.

4. Actuation of any fire sprinkler flow switch shall energize the release mechanism on all fire/smoke doors causing them to close and stop operation of all air distribution system equipment monitored or controlled by the fire alarm system.

5. Activate HVAC fire/smoke air dampers electrical release, causing all the fire/ smoke air dampers to close.

6. Perform any additional functions as specified herein, shown on the Drawings or required by the Fire Marshal.

C. Trouble Condition

1. A break or short in a manual or automatic fire initiating wiring circuit shall activate the respective zone trouble lamp or annunciator readout on the fire alarm control panel and sound a trouble signal at the control panel.

2. A break or short in the evacuation alarm signaling wiring circuit shall activate the trouble lamp or annunciator readout in the control panel and sound a trouble signal at the control panel.

3. 120-volt AC normal power shall be monitored with indication by a "power on" lamp. Upon normal power outage, the system shall activate a power trouble condition lamp or annunciator readout and indicate a trouble condition.

4. The control panel shall monitor the standby batteries, upon a low battery condition, activate the low battery lamp or annunciator readout, and indicate a trouble condition.

5. System ground detection shall be provided for the entire system. Upon ground detection, activate the ground detection lamp or annunciator readout and indicate a trouble condition.

6. Actuation of any fire sprinkler shut-off valve tamper switch shall activate a separate zone trouble lamp or annunciator readout for each valve. The trouble zone shall be completely independent of the fire sprinkler flow switch zone, and completely independent of any other fire alarm zone.

D. Control Panels Employing Alphanumeric Readouts shall display the required data, along with a prompt to review the list chronologically. The end of the list shall be indicated.

E. Equipment shall be weatherproof gasketed where installed in locations exterior to the building, or where indicated on the Drawings. Weatherproof equipment shall be tamper-resistant.

F. The Control Panel shall provide power, annunciation, supervise and control for the fire detection system. The system shall be designed such that alarm indications override trouble and control conditions.

2.2 FIRE ALARM CONTROL PANEL

A. General

1. The fire alarm control panel shall be software programmable, micro-processor controlled, solid state, electronic integrated system. The panel shall be the product of one Manufacturer. The control panel shall provide power, annunciation, supervision and control for the detection and alarm system. The detection system shall remain 100% operational, responding to an alarm condition while in the routine maintenance mode.

2. Addressable detection and control devices shall be individually identified by the system, and any quantity of addressable detection devices shall be in alarm and any quantity of addressable control units shall be operable at any time up to the total number connected to the system.

3. The microprocessor shall access the system program, which is stored in non-volatile programmable memory, for all Control-By-Event (CBE) functions. The system program shall not be lost upon failure of both primary and secondary power. Volatile memory shall not be acceptable.

4. A means shall be provided for acknowledging each abnormal condition. Each activation of the appropriate acknowledges button shall sequentially acknowledge every point in the system. After all the points have been acknowledged, the LEDs shall glow steady, and the panel audible signal will be silenced. The total number of alarms, supervisory, and trouble conditions shall be displayed along with a prompt to review each list chronologically. The end of the list shall be so indicated.

5. An alphanumeric annunciator readout shall indicate on the control panel the activation by type, loop, and address of the specific device, sub-loop or alarm/ monitor/control point via an alphanumeric display. An audible alert shall sound at the control panel and an alarm light shall flash.

6. If the microprocessor fails, the system shall execute a default-signaling program. This program shall enable the control panel to sound the audible signals and summon the Fire Department. In addition, a red LED shall light to indicate the communication loop wherein the alarm originated. Inability of the system to sound signals or summon the fire department during microprocessor failure shall not be acceptable.

7. Protected access to the system controls shall be provided to allow the user/ operator access to the following system functions:

    a. Status of all addressable points.
    b. Status of all events logged.
    c. Set/change the real-time clock and date.
    d. Perform an operational manual test of the system from the control panel, including actuation of any initiating device and trouble circuit without alarming the remote central station. The panel shall automatically return to normal mode in the event the panel remains unattended in the service mode.
    e. Retrieve from event logs the last 300 alarms, or control points and 300 trouble conditions.

8. Individual input (monitor) and output (control) device addressability shall all be performed on the same pair of wires. Wiring shall be Class "A" or "B". When Class "B" wiring is used, no special wiring sequence shall be required on addressable device circuits. An unlimited number of wiring branches shall be permitted with no loss of supervision.

B. Cabinet

1. A metal tamper resistant cabinet shall contain the control panel components. Panel shall be surface or flush mounting as indicated on the Drawings. Provide a full height tamper resistant hinged locking cabinet door. The door shall have transparent, high impact windows to allow visual observation of all indicators and switches without opening the panel door.

2. "In-out" circuit conductors shall terminate on numbered screw-type terminals.

3. All groups of circuits or common equipment shall be clearly marked and shall be expandable by inserting interchangeable units.

C. Provide a Floor Plan of the Facility Framed Under Acrylic and Mounted Adjacent to the Fire Alarm Annunciator. The floor plan shall be to scale and shall have room numbers clearly displayed on all rooms corresponding to the annunciator for the purpose of easily identifying the fire zones.

D. The Control Panel shall provide positive protection against the fire alarm system inadvertently being left in a non-operating status. The alarm system shall automatically restore and resound alarms and trouble signals, if subsequent alarm initiating or trouble signals are received under any of the following conditions:

1. After the alarm or trouble silence switch have been activated.

2. Prior to resetting system after previous alarm or trouble conditions.

E. The system indicating, and operational control devices shall be mounted on the control panel face behind the panel door and shall provide the following minimum functions:

1. Individual visual indicating pilot lights annunciator or alpha numeric readout to monitor the following alarm system conditions:

a. Input power.
b. System common alarm.
c. System common trouble.
d. Alarm or trouble signal silenced.
e. Ground fault.
f. Battery conditions.
g. Each individual alarm, control or initiating zone-activation.
h. Each individual alarm, control or evacuation zone-trouble.
i. Report, by specific device number, any device removed from an addressable initiating circuit, all other devices shall continue to function.

2. Manual control switches to allow the following system controls:

a. Alarm silence.
b. Trouble silence.
c. Test all indicating pilot lights and readouts.
d. System reset, including remote devices connected to the alarm panel.
e. Alarm test to initiate an alarm condition from the control panel.
f. Central alarm disconnects for system testing without activating central alarm system.
g. Changing the status of configured circuits (arming or disarming and changing status of relays). If any change in status degrades system operation as configured, a trouble condition shall be reported and remain until system operation again meets configured status.
h. Perform multiple operations at the same time. These operations shall include but not be limited to timed functions and multiple configured sequences.

3. Individual indicating meters for the following information.

a. Battery ammeter.
b. Battery voltmeter.

F. Alarm Initiating Zone Modules.

1. Shall supervise and accept remote alarm actuating device-input signals. An alphanumeric readout shall indicate separate zone alarm and trouble indicators for each zone.

2. Zones shall be compatible and designed to operate with the connected initiating devices either addressable or non-addressable type.

3. A spare double throw set of software programmable auxiliary alarm relay contacts shall be provided for control of remote devices for each zone. Contacts shall be rated 120 volt, 60Hz, 3 Ampere.

4. The quantity of alarm initiating zones shall be provided as shown on the Drawings, but in no case shall the zoning be less than the following:

a. Addressable manually activated alarm-initiating stations by individual station location (i.e., pullstation #100 Room 100 1st floor; pullstation #300, corridor #300, 3rd floor north; etc.).
b. Non-addressable manually activated alarm initiating stations by floor and building area (i.e., pullstation #100 Room 100 1st floor; pullstation #300, corridor #300, 3rd floor north; etc.).
c. Addressable and non-addressable automatic alarm initiating devices (ceiling or wall mounted heat, flame and smoke detectors) by individual device location. Except rooms with multiple automatic smoke alarm initiating devices shall be zoned by room location (i.e., smoke detectors Corridor #121 1st floor south; flame detectors shop 404 4th floor etc.).
d. Elevator lobby automatic alarm initiating devices by floor level and individual elevator lobby area.
e. Air duct smoke detectors by individual location.
f. Smoke or heat activated fire doors/hatches by individual location.
g. Fire sprinkler water flow switch by individual location.
h. Fire sprinkler water shut off valve tamper switch by individual location. Activation of the tamper switch shall sound an independent trouble signal only. Activation of the tamper switch shall not cause a general fire alarm evacuation to be activated.
i. Smoke detectors for activation and control of fire/smoke air dampers by individual building room/space location.

G. Evacuation Alarm Signal Control.

1. Shall supervise and activate remote evacuation alarm devices.

2. Evacuation alarm shall be compatible and designed to properly operate with the connected audio and visual evacuation alarm devices, with no signal degradation. The alarm shall have spare capacity to allow the future addition of an additional 20% evacuation alarm devices, on any circuit.

3. The evacuation alarm shall provide group evacuation signal control of all evacuation zones.

4. The alarm modules shall be field resettable to provide either continuous or coded audio evacuation alarm signals. The Coded alarm signal shall provide an intermittent "on-off" pulsed sound activation of audible evacuation alarm devices.

5. An evacuation alarm circuit trouble indicating readout shall be provided for each evacuation zone.

H. Automatic Ground Detection shall detect either positive or negative voltages when earth connections of 50,000 OHMS or less occur and activate the ground trouble signal.

1. A ground fault code shall provide indication of either a positive or negative ground fault and shall operate the general trouble devices as specified herein but shall not cause an alarm to be sounded.

2. A short circuit error message shall be a standard feature of the fire alarm control panel. Each communication loop shall be monitored for short circuits and shall have a distinctive error message for visual indication of circuits and operating trouble devices as specified herein but shall not cause an alarm to be sounded.

I. Power Supply

1. The power supply shall be adequately sized to properly operate the equipment, including remotely connected, spare and future indicated equipment with all alarm devices in alarm condition. Provide 20% spare power supply capacity for future expansion. Provide transfer modules and multiple power supplies as required for proper operation.

2. Input voltage 120/240-volt or 120/208-volt 60Hz AC.

3. Lightning protection, surge transient voltage and RF noise filtering protection on the input and output phases of the power supply shall be provided.

4. Supervised voltage types (i.e., 120V, 60Hz AC, 24-volt AC, 24-volt D.C., etc.) required by special connected equipment shall be supplied, including but not limited to:

   a. Alarm initiating devices.
   b. Door or hatch hold-open or closing devices.
   c. Automatic fire/smoke doors and dampers.
   d. Evacuation alarm devices.
   e. Control and annunciator panels.
   f. Fire and smoke dampers.

5. A solid-state power transfer circuit shall provide (UPS) Uninterruptible Power supply between internal standby power and line power automatically and instantaneously if normal power fails or falls 15% of normal ("brown out" and overvoltage conditions).

6. Individual circuit fuses shall be provided for smoke detector power, main power supply signal circuits, battery standby power, and auxiliary output.

J. Battery Back-Up Operation

1. Internal batteries and battery power supplies shall be provided to allow 60 hours continuous automatic normal operation of the entire control panel and fire alarm system after the failure of the incoming utility power. Sufficient battery capacity shall remain at the end of 60-hour period to provide 10-minutes of continuous operation of all connected evacuation alarm devices.

2. Batteries shall be sealed lead-acid. Batteries shall be earthquakes restrained.

3. The battery charger shall be automatic, dual rate with capacity to recharge completely discharged batteries in 18 hours. Charger shall be temperature compensated.

4. The battery backup system shall not be required to provide capacity to maintain the normal operation of the following devices during a failure of the incoming utility power. The automatic smoke detectors associated with these devices shall maintain operation during power failures:

    a. Automatic fire/smoke air dampers “hold open” and close devices.
    b. Automatic fire/smoke doors and hatches “hold open” and close devices.

K. Lightning and Surge Protection Device shall be a standard feature of the fire alarm control panel and shall be incorporated in the power supply circuit, common control circuits, signal circuits, and telephone line circuit.

L. Central Station

1. Circuitry shall be provided in the control panel to permit transmission of trouble and alarm signals over leased or privately owned telephone cables to a remote-receiving panel. A reverse polarity and a “master box” circuit shall be provided in the control panel. There shall be a supervised disconnect switch to allow testing of the fire alarm system without transmitting an alarm signal to the central station.

M. The Alphanumeric Annunciator shall List upon Request:

1. Alarms with time, date and location.

2. Troubles with time, date and location.

3. Status of output functions, "on" or "off".

4. Sensitivity of addressable smoke detectors.

5. Detection device number, type and location.

6. Status of remote relays, "on" or "off".

7. Acknowledgment time and date.

8. Signal silence time and date.

9. Reset time and date.

N. The System shall also provide the Following:

1. Counting the number of addressable detectors within a "zone".

2. Which are in alarm.

3. Counting "zones" which are in alarm.

4. Counting the number of addressable detectors, which are in alarm.

5. Alarm on the system.

6. Differentiating among types of addressable detectors such as smoke detectors, manual stations, water-flow switches, thermal detectors, flame detectors etc.

7. Assigning priorities to types of detectors, zones or groups of detectors.

8. Cross-zoning.

O. Control Functions:

1. Control functions shall be assigned on the basis of multi relational system initiation patterns of detection devices including full logic element equations using as "anding" zones, counting zones, counting devices, "anding" groups, conditional "if", "then", "or" programming and "anding" types of detection devices.

2. Control functions shall be assigned on the basis of, cycle, delay, count, time of day, day of week, day of month and with a holiday schedule of up to 30-holidays per year. Each addressable detection device shall report its condition to the system control unit not less than every 4-seconds in a manner such that failure of the connections to the internal electronics of the device will result in a trouble signal which identifies the specific device involved.

3. The system shall be field programmable for the response of control points to monitored devices.

4. The operating software program shall provide programmable control for the Event-Initiated-Programs (E.I.P.) which shall allow automatic operation of system control points in the event of an alarm condition. To program these E.I.P.'s, the system shall use a specifically designed user friendly programming language, which shall not require a knowledge of computer programming to learn and understand.

5. The operating software shall support the following additional capabilities:

   a. Three levels of designated and unique Priority Alarms for each point.
   b. Designated "Sense Mode" for status interpretation for each point.
   c. Designated Print/No Print/Vectoring Mode for each point.

6. The input statement defines the conditions required to activate the associated output statement. The input statement shall consist of single or multiple monitor point status, subroutine status, time comparison and the utilization of AND, OR, NOT, COUNT, and DELAY logic functions.

7. The output statement defines the action to be taken by the control panel. The output statement shall consist of activation/deactivation of single or multiple control functions, subroutines, and remote Annunciator status LED's. Output statements shall also include the "Alert" messages.

8. The software shall provide an "alert" message, unique to each point in the system, which will provide specific instructions for the operator on duty. These messages shall be up to five lines with up to 70 characters in each line. Each system monitor point shall have five specific alert messages when in alarm. Control points shall also be assigned alert messages.

9. The hardware and software shall have the capacity to accept up to 64 independent programs. Each program shall have "Edit" or "No Edit" capability. Each program shall be written in an equation format comparable to ladder-logic equations. The Equations shall consist of an input and an output statement.

10. Provide initial programming services for coding, loading and debugging the initial Owner specified programs, as part of the Contract.

11. Programming Command Definition

    a. Timing command shall provide time delay and time control functions based on internal clock/calendar by time of day; day of week; day of month; month in year.
    b. Count command shall provide a specific number of events to occur before a control action is initiated.
    c. Pulse command shall provide on control for a specific period of time.
    d. Cycle command shall provide on-off control for preset periods of time.
    e. Print command shall provide printing of specified information after an event occurs.

2.3 MANUALLY ACTIVATED ALARM INITIATING DEVICES

A. General

1. An electronic, digital multiplex, addressable module shall be incorporated into each device. The module shall communicate the status and trouble condition of each device with a unique address code. The module shall communicate with and be supervised and monitored by the fire alarm control panel.

2. Devices shall be suitable for use on a Class "A" 4-wire (Class "B", 2-wire) supervised alarm-initiating circuit.

3. Numbered screw type terminals shall be provided for "in-out" connections of the alarm circuit wiring.

4. The face of the station shall have lettering indicating "fire" and operational instructions. Stations shall be tamper-resistant, semi-flush mounting.

5. Auxiliary spare switch contact shall be provided for control of remote devices rated 120 volts, 60Hz, AC, 3-amp minimum.

6. Stations shall provide visual indication the station has been activated. A key (and/or special tool) shall be required to gain access into the station to reset the station after being activated.

7. Stations shall be "break-glass" or "non-break- glass" type as required by local Fire Marshal or indicated on the Drawings.

8. Stations installed outdoors shall be weather resistant construction, double action to activate the pull station.

9. RF noise and transient voltage filtering shall be provided in the device electronics.

B. Pull Stations

1. Pull stations shall be non-coded single action, requiring a single manual "pulling" action to initiate the fire alarm.

2.4 AUTOMATIC ALARM INITIATING DEVICES

A. General

1. An electronic digital, multiplex, addressable module shall be incorporated into each device. The module shall communicate the status and trouble condition of each device with a unique address code. The module shall communicate with and be supervised and monitored by the fire alarm control panel.

2. Devices shall be suitable for use on a Class "A", 4-wire (Class "B", 2-wire) supervised alarm-initiating circuit. Where initiating devices are shown connected to an existing system, devices shall operate on 2-wire or 4-wire circuits plus, 2-wire power circuit, or on multiplex circuit as required by the existing equipment.

3. Numbered screw type terminals shall be provided for "in-out" connectors of the alarm circuit wiring.

4. Auxiliary double throw spare relay contact shall be provided for activation of remote rated devices 120V, 60Hz, AC, 1-amp minimum.

5. RF noise and transient voltage filtering shall be provided in the initiating device electronics.

6. Initiating devices shall be reset from the fire alarm control panel and shall not require local individual resetting.

B. Smoke Detector

1. Detectors shall comply with UL Standard 268, 167 and 168, and shall use solid state electronic circuits throughout.

2. The smoke detector shall operate on a total of two circuit wires. Alarm signaling and detector power shall use the same conductors. Detector sensitivity shall be factory set at 1.5%.

3. A fine mesh insect screen shall be provided on all detector openings.

4. The detector shall lock-in on alarm and shall provide a visual alarm/ trouble indicator light. An electromechanical test feature shall provide functional testing of the unit without smoke.

5. The detector shall also incorporate a fixed temperature heat detector rated at 135 degrees F. The heat detector shall operate the alarm circuit and alarm/trouble light.

    a. Photo electric type smoke detectors shall employ a Light Emitting Diode (LED) as the detector light source, activated by the presence of combustion smoke products. Failure of the LED shall activate the alarm/trouble light on the detector.
    b. Ionization type smoke detector shall employ the triple chamber (dual chamber) ionization principle, activated by the presence of combustion products. The ionization chamber shall be RF shielded.

6. Air duct smoke detector photo electric or ionization type for installation on a mechanical air duct. Two air tubes shall extend into the air duct. The sampling tube shall extend across the entire width of the air duct. The second tube shall allow air to escape back into the duct. Omit fixed temperature heat detector in air duct smoke detectors.

7. Area protection smoke detector, photoelectric or ionization type, self-contained inside a protective housing/cover. Separate fixed mounting base with wiring terminations and removable “plug-in” twist locking type smoke detector head.

C. Fire Detector - Heat

1. Heat detectors shall be dual action electro-thermostatic combination rate of temperature rise and fixed temperature operation. An indicator shall be visible when detector has activated.

2. The rate of rise element shall be self-restoring, after activation.

3. The fixed temperature unit shall be set at 136 degrees F (190 degrees F for high temperature areas, i.e., areas over 110 degrees F ambient.)

4. Provide a wire guard cover for the detector.

D. Fire Sprinkler Water Flow Detector

1. Vane-type water flow detectors shall be provided on the sprinkler system piping as shown on the Drawings. Detectors shall be designed for mounting on either vertical or horizontal piping but shall not be mounted in a fitting or within 12 inches of any fitting that changes the direction of water flow.

2. The detectors shall have a sensitivity setting to signal any flow of water that equals or exceeds the discharge from one sprinkler head.

3. Detector switch mechanisms shall incorporate an instantly recycling pneumatic retard element with an adjustable range of 0 to 70 seconds. Switches shall have a minimum rated capacity of 7-amp, 125-volt AC, 0.25-amp 24-volt D.C. A D.P.D.T. switch shall be actuated by a polyethylene vane extending into the waterway of the piping.

4. Detectors shall be of weatherproof, dust tight construction and shall provide a ¾-inch conduit entrance. Detector shall be finished in red baked enamel.

5. Flow switch shall be sized to match the fire sprinkler riser pipe diameter.

E. Fire Sprinkler Valve Tamper Switch

1. Tamper switch shall monitor the position of the fire sprinkler shut-off valve. Operation of the valve shall activate the switch and activate a trouble alarm. The valve trouble alarm shall be a separate zone from the respective water flow alarm.

2.5 EVACUATION ALARM DEVICES

A. General

1. Evacuation alarm devices shall activate automatically from the control panel. Devices shall operate on a Class "A", 4-wire (Class "B", 2-wire) supervised alarm evacuation circuit. Series wired alarm devices shall not be used.

2. Numbered screw type terminals shall be provided for "in-out" connections of the alarm circuit wiring.

3. Devices shall be installed in a box, 3½-inch deep maximum, flush mounting unless indicated otherwise on the Drawings. Size as required for the audible alarm indicating device and wiring connections. Provide a trim ring and metal grill cover assembly. Cover assembly shall be a minimum of 1/16-inch minimum thick flat stainless steel or aluminum. Finish color as selected by Architect. The word "fire" shall appear on the grill minimum ½-inch letters. The grill shall be screw attached to the box.

4. The visual alarm-indicating device shall be an integral part of the audible alarm box assembly.

5. Each audible evacuation device shall incorporate an integral visual alarm indicator.

6. Alarm initiating devices, audible evacuation device and visual evacuation devices shall be connected to separate circuit conductors. Do not connect these devices to the same circuit conductors. The separate audible evacuation circuits shall provide coded or non-coded audible signaling independent of the visual evacuation alarms.

B. Audible Alarms

1. Vibrating Horns

a. Vibrating type horns shall be used where audible devices are shown on the Drawings for the following areas: Building egress pathways, exterior of buildings, stairs, corridors, lobbies, reception areas, shops, exercise areas, areas exceeding 300 square feet, and all other areas not specifically listed or identified.

b. Horn shall be heavy-duty electromagnetic vibrating type. Horns shall have field adjustable sound output level control.
c. Horn shall provide a minimum sound level of 95dB at 10 feet, when installed in the field operating conditions shown on the Drawings.

2. Mini-Horns

a. Shall be used in rooms smaller than 300 square feet. Mini-horns shall not be used as a substitute where vibrating horns are required.
b. Mini-horn shall be electric-piezo electronic.
c. Mini-horn shall provide a minimum sound level of 87dB at 10-feet, when installed in the field operating conditions shown on the Drawings.

C. Visual Alarm Indicator

1. Lamp/Strobe internally illuminated projecting lens assembly, with flasher system. Unit shall flash on and off to provide visual indicating of fire alarm.

2. The word "FIRE" shall appear on the lens or lens plate. The lens shall project beyond the face of the cover assembly.

3. Flash rate, 1-3 flashes per second, with approximately 0.001 second flash duration. Flash rate independent of audible device coded signal output.

4. Light source, Xenon high intensity flash strobe tube white/clear color.

5. 75-candelas minimum, 120-candelas maximum flash intensity, along the direct line perpendicular axis viewing angles. Average flash intensity shall not be less than 15-candelas from any viewing angle, to comply with 2017 NFPA 72 and UBC 1994.

6. Visual devices located in multipurpose room shall be provided with 10-gauge wire guard.

D. Door Magnetic Hold-Open and Release-Close

1. Combination electromagnet and separate “pivot” type magnet armature latch. The mechanism shall “hold-open” and “release-close” the door from the open position to the closed position when electric power is interrupted to the “hold-open” electromagnet. Door opening operation shall be unobstructed by the hold-open mechanism.

2. The “pivot” shall provide not less than 120-degree adjustment range hinged flat plate to align to the door leaf position when the door is open. Integral “pivot” mounting plate with threaded stainless steel through-bolt attachment to the door leaf. The pivot “armature” shall make “full face” contact with the magnet when the door is open and provide shock absorbing nylon “pivot” bearing. The length of the pivot assembly shall be selected to allow the respective door to be held in a 90-degree or greater open position.

3. The electromagnet shall create magnetic force when energized to retain the armature with a hold-open force of not less than 25-pounds, (111N) and suitable

for continuous energized operation. Operating voltage shall match the respective electrical circuit connection. The electromagnet shall mount on and attach to surface or flush outlet box, “single-gang”, wall mounted or floor mounted.

2.6 REMOTE FIRE ALARM ANNUNCIATOR

A. General

1. The annunciator panel shall be powered and operated from the fire alarm control panel. "In-out" circuit conductors shall terminate on numbered screw-type terminals.

2. A metal tamper resistant weatherproof cabinet shall contain the annunciator components. The panel shall be surface or flush mounting as indicated on the Drawings. Provide a full height tamper resistant, hinged locking cabinet door. Door shall have transparent high impact windows to allow visual observation of all indicators and switches.

3. An electronic digital, multiplex, addressable module shall be incorporated into the annunciator. The module shall communicate the status and trouble condition of each device with a unique address code. The module shall communicate with and be supervised and monitored by the fire alarm control panel.

B. Each Alarm Initiating Zone (including spares) shall be individually annunciated in the annunciator panel by a back lighted, translucent identification plate. The translucent plate size shall be 1-inch high by 2-inches wide. The plate shall be engraved (black letters on white) with the respective ZONE number and name to match the control panel (i.e., ZONE 1 - 1st floor pull station; ZONE 7 – 2nd floor - AHI - duct detector; ZONE 9 – 3rd floor east - smoke detector; ZONE 11 - fire sprinkler water flow; etc.). Minimum letter size 12-point characters. Provide space for a minimum of four future zone plates.

C. A Common Fire Trouble Alarm shall be annunciated in the annunciator panel from the fire alarm control panel. The trouble annunciator shall match the alarm zone annunciator. Plate shall be marked "fire alarm system trouble". 18-point letter size.

D. A Separate Trouble/Supervisory Alarm shall be annunciated in the annunciator panel from the fire alarm control panel for each fire sprinkler water valve tamper switch. The trouble annunciator shall match the alarm zone annunciator. Plates shall be marked "sprinkler tamper switch trouble- (location". "Location" shall be the shut off valve location being monitored.

E. Annunciator Lamp Circuits shall be automatically supervised. Provide lamp test switch in the annunciator panel.

F. An Audible Alarm/Trouble Buzzer with Silence Switch and Automatic Resound for Subsequent Alarm/Trouble Signals shall be provided. The annunciator panel shall be automatically reset when the control panel is reset.

G. Provide a Sign on each Remote Fire Alarm Annunciator. The sign shall describe the location of the fire alarm control panel(s) connected to the respective annunciator

(i.e., Fire Alarm Control Panel (FACP) located in Art Building, 2nd floor, Room #226, etc.). Minimum size sign letters not less than ⅜-inch high, engraved plastic nameplate.

2.7 REMOTE EQUIPMENT MONITORING AND CONTROL (REMC)

A. An Electronic Digital Multiplex Addressable Module shall be provided at each device or equipment indicated to be controlled by the multiplex system. Multiple addressable control ports shall be provided in each module quantity as required for each point controlled or monitored. The module shall communicate the monitor status, control action and trouble condition of each device with a unique address code. The module shall communicate with and be supervised and monitored by the fire alarm control panel.

B. Where Multiple Points are Monitored or Controlled, Provide Digital, Multiplex, Multipoints, Monitor, Control Panel (REMC). The panel cabinet shall be self-contained NEMA 1 indoor area, NEMA 3R for outdoor areas, construction and hinged locking door. Provide tamper switch detection zone on the cabinet door; provide 60-hour battery UPS backup and power supply, the same as required for the fire alarm control panel. Panel shall be expandable using plug-in circuit monitor/ control printed circuit cards. Provide barriered numbered terminal strips.

C. Each Control Point shall provide a Class-A or Class-B supervised "dry" relay contact single pole double throw-maintained contact rated 10-amp, 120 volt, 60Hz AC.

D. Each Monitor Point shall provide not less than one of the following supervised methods of monitoring a remote device or equipment action or status.

1. Remote "dry" contact operation normal open, normally closed or momentary contact operation.

PART 3 - EXECUTION

3.1 IDENTIFICATION (ADDITIONAL REQUIREMENTS)

A. The Inside Cover of Alarm Initiating Devices shall be marked with the zone initiating number corresponding to the zone number in the control panel. Marking shall be with a felt-tip pen.

B. The Door(s) into the Room or Closet containing the Fire Alarm Control Panel shall be provided with a sign stating, "FIRE ALARM CONTROL PANEL INSIDE". Minimum 1-inch high "block" letters, white letters on a red background. Fasten sign to door with a minimum of four screws.

3.2 TESTING

A. The Entire Fire Alarm System shall be tested after the installation is complete.

1. Individually activate each manual initiating station and verify correct alarm operation and control panel response.

2. Individually test each automatic initiating device and verify correct alarm operation, control panel response and remote equipment operation.

3. Provide pressure differential testing for each air duct smoke detector.

B. Test the Battery Back-up System by disconnecting the incoming normal power and allowing this alarm system to operate 60 hours on battery power. Sound the alarm system for 5-minutes at the end of 60 hours on battery power.

C. Perform all Electrical and Mechanical Tests Required by the Equipment Manufacturer's Certification Form. Measure and adjust each automatic detection detectors to the maximum stable sensitivity setting. Detector tests shall be performed with the detector at its operational location and under normal operational environmental conditions in the area. Bench settings are not acceptable. An operational checkout test and report shall be performed. Submit six copies of test report results. The tests and report shall include, but not be limited to:

1. A complete list of equipment installed and wired.

2. Indication that all equipment is properly installed and functions and conforms to these Specifications.

3. Test of individual zones as applicable.

4. Serial numbers, a location by zone and model number for each installed detector.

5. Voltage (sensitivity) settings for each ionization and photoelectric detector as measured in place with the HVAC system operating.

6. Response times on thermostats and flame detectors (if used).

7. Technician's name, certificate number and date.

8. The completed manual and automatic monitoring and control system shall be tested to ensure that it is operating properly. This test will consist of exposing the installed units to a standard fire test.

9. Acceptance of the system shall also require a demonstration of the stability of the system. This shall be adequately demonstrated if the system operates for a 90-day test period without any unwarranted alarms. Should an unwarranted alarm(s) occur, the Contractor shall readjust or replace the equipment and detector(s) and begin another 90-day test period. As required by the Architect, the Contractor shall recheck the detectors using the fire test after each readjustment or replacement of detectors. This test shall not start until the Owner has obtained beneficial use of the building under tests.

3.3 WIRING (ADDITIONAL REQUIREMENTS)

A. Review the Total System Point-to-Point-Wiring Layout to assure that the correct number and type of wires and conduit sizes are installed.

B. Final Connections, Testing, Adjusting and Calibration shall be made under the direct Supervision of a Factory-Trained Technician of the System Supplier.

C. All Wiring shall be in Conduit.

D. All Wiring in Cabinets shall be neatly formed, laced and made up on bolt and nut terminal blocks. Tag all spare conductors. All conductors shall terminate on terminal strips with spade lugs, of adequate size for all incoming and outgoing conductors. The strips shall be labeled as to their use and wiring diagram shall be placed on the cabinet door showing connections of all related equipment to these strips.

E. Wiring Requirements for shielding certain conductors from others or routing in separate raceways shall be as recommended by the Manufacturer's documentation. The quantity of raceways and circuit conductors shown on the Drawings is schematic. Provide all conduit, raceways and conductors per Manufacturers recommendations and include all material and labor costs in the Contract price.

F. The conductors used for digital, multiplex communication between the fire alarm control panel and external remote initiation devices, control points and annunciators, shall be twisted insulated pairs, each pair 100% metallic shielded, 4-pair multi-conductor jacketed cable, with a separate 100% metallic shield enclosing all conductors under the jacket, #16 AWG copper conductors minimum with a separate internal ground/drain conductor, UL listed for fire alarm system use, isolation rated for 600 volts AC, 60Hz. One spare multiplex conductor cable shall be provided in all main and branch device/equipment connections for future system use. "Tees" and taps at any junction box location in the communication lines, shall be permitted by the system to additional devices without affecting proper system operation.

G. WIRE SIZE: Wire shall be sized to ensure installed circuit voltage drop does not exceed Manufacturer's recommendations, but in no case less than the following.

1. Wiring Requirements for shielding certain conductors from others or routing in separate raceways shall be as recommended by the Manufacturer's documentation. The quantity of raceways and circuit conductors shown on the Drawings is schematic. Provide all conduit, raceways and conductors per Manufacturer's recommendations and include all material and labor costs in the Contract price. The minimum insulated conductor size for fire alarm non-digital multiplex initiating circuits and control circuits shall be not less than #14 AWG (600-volt THHN/THWN) copper.

2. Conductors for evacuation alarm device circuits shall be insulated (600-volt THHN/THWN) copper conductors, quantity as recommended by Fire Alarm Manufacturer. Not more than a total of ten evacuation alarm devices shall be installed on any single circuit "run" extending from the fire alarm control panel, including "T" and "branch-tap" connections. The limit of ten devices shall count each horn or strobe as separate alarm devices (i.e., six-horns plus four strobes = ten alarm devices; five combination horn/strobe units' equals' ten alarm devices). Conductors smaller than #12 AWG shall not be used for evacuation alarm device circuits:

Total Circuit Conductor Length (Including "T" and "Branch" Connections)	Minimum Wire Size
Up to 300 feet and all device terminations	#12 AWG
301 thru 600 feet.	#10 AWG
601 thru 900 feet.	#8 AWG
Between Buildings and Over 900 feet.	#6 AWG

H. Air Duct Smoke Detector and Motor Controller Connections:

1. Provide a Remote Equipment Monitoring and Control REMC module for each air duct smoke detector location. Install the REMC at the respective motor control (magnetic motor starter) unit.

2. Provide connection for automatic airflow "shut-down" interlock, upon detection of smoke, by the respective air duct smoke detector from the REMC to the motor controller.

3. Provide software programming of the REMC from the fire alarm control panel to shut down all airflow control modules upon any fire alarm detection condition in the building when required by the Fire Marshal.

4. Provide ½-inchC. - 2#12 (AWG) CU-THHN/THWN from the REMC to respective motor control unit.

5. Provide connection of the REMC to the fire alarm multiplex control system with ¾-inch minimum conduit and multiplex conductors.

I. Automatic Fire/Smoke Doors/Hatches

1. Provide a remote equipment monitoring and control module REMC located at each automatic fire/smoke door and hatch containing internal or external automatic closures and/or hold open devices for fire and/or smoke.

2. Provide connection from the REMC to the respective door or hatch fire/ smoke detection system. The REMC shall monitor and report the door/ hatch automatic detection of smoke/fire. The REMC shall provide activation of the door/hatch automatic closure mechanism upon any fire alarm detection condition in the building, with software programming from the fire alarm control panel.

3. Provide ¾-inch conduit 6#14 from the REMC to the respective door/hatch system controls and hold open devices.

4. Provide connection of the REMC to the fire alarm multiplex control system with ¾-inch minimum conduit and multiplex conductors.

5. Provide ¾-inch conduit with 2#10 homerun to the fire alarm control panel from each door/hatch location, for 24-volt D.C. or 120-volt 60Hz AC control power for the door hold open/closing system.

J. Fire/Smoke Air Dampers

1. Provide a remote equipment monitoring and control module REMC located at each building space/room protected by fire/smoke air dampers.

2. Provide connection from the REMC to each fire/smoke air damper for the respective building space/room. The REMC shall provide activation of the respective dampers closure mechanism, with software programming from the fire alarm control panel.

3. Provide ½-inch conduit 3#14 from the REMC to each respective fire/smoke air damper.

4. Provide connection of the REMC to the fire alarm multiplex control system with ¾-inch minimum conduit and multiplex conductors.

5. Provide ¾-inch conduit with 2#10 to the fire alarm control panel from the REMC for 24-volt D.C. or 120-volt AC control power for fire/smoke air damper operators.

K. Provide Smoke Detection per NFPA 72 throughout all 1-hour corridors to operate a control module and relay in localized electrical room. From relay provide 120 VAC to each combination smoke/fire dampers; do not exceed 16-dampers per circuit.

3.4 OUTLET BOXES (ADDITIONAL REQUIREMENTS)

Device outlet boxes shall be flush mounted unless indicated otherwise on the Drawings. Provide extension rings to finish flush with finish surface. Where the Drawings indicate surface mounted devices, outlet boxes shall be cast metal with threaded hubs. Where the conduit entrances are not exposed for surface mounted devices, provide flush outlet box behind the device box and omit the conduit hubs on the device box. Size device boxes and outlet boxes per Manufacturers recommendation and as required by Code for wire fills.

3.5 SPECIAL INSTALLATION REQUIREMENTS

A. General:

1. Whether or not shown on the Fire Alarm Drawings, the following systems shall be provided as part of the Contract. Provide fire alarm devices and connection of the systems to the fire alarm control panel including all material, labor and cost in the Contract.

2. Refer to Mechanical, Plumbing and Architectural Drawings for the location and quantity of these systems.

B. Air Duct Detectors:

1. Provide air duct smoke detectors in each supply air duct and return air duct with an air flow of 2000 CFM or greater. Coordinate with Mechanical Contractor. Sampling tube shall extend across entire duct width.

2. The air duct smoke detectors shall be provided on both the return and discharge sides of the air ducts of each unit.

3. Air duct smoke detectors shall be physically accessible for testing and maintenance after installation.

4. Install the air duct smoke detectors to provide the separation distance, recommended by the Manufacturer, from obstructions in the air ducts causing non-uniform air flow patterns, including but not limited to the following:

   a. Elbows/bends in the air duct.
   b. Fan/blower air source.
   c. Air discharge or air intake louvers.

5. Provide additional airflow control “vanes” inside air ducts and air duct length extensions, where airflow turbulence causes operation problems with the respective air duct smoke detectors. Coordinate installation with Mechanical Contractor.

6. Prior to installation of smoke detectors in “air ducts”, perform airflow velocity and airflow turbulence test measurements. The tests shall be conducted at each proposed smoke detector installation location in the respective air duct, with normal operational airflow velocities present in the air ducts.

7. The smoke detector type and installation location in the respective air duct shall comply with the Manufacturer’s recommendations to insure proper smoke detector operation. Adjust the smoke detector locations and provide smoke detectors with air velocity and air turbulence sensitivities compatible with respective air duct.

8. Air duct detectors malfunctioning or failing to function as a result of incorrect application or improper installation shall be removed. Provide proper air duct smoke detector locations and provide smoke detectors with airflow velocity and air turbulence sensitivities compatible with respective air duct.

C. Fire Sprinkler Water Flow and Shut-off Valve Tamper Switches:

1. Provide fire sprinkler water flow switches installed on each main fire sprinkler rise pipe, coordinate with the Fire Sprinkler Contractor.

2. Provide fire sprinkler water valve tamper switches installed on each main fire sprinkler shut-off valve, coordinate with the Fire Sprinkler Contractor.

D. Fire/Smoke Rated Door/Hatch Closures and Hold Opens:

1. Provide connection to the fire alarm control panel, of each fire/smoke rated door/hatch and damper with self-contained fire/smoke detection, hold open or closure devices.

2. Provide automatic smoke detectors installed within 3-feet of each side of a fire/ smoke rated door/hatch and damper. Provide magnetic release hold open devices for each door/hatch. Provide connection to the fire alarm control panel.

E. Area Protection Automatic Smoke Detectors

1. Area protection smoke detectors shall be ceiling mounted unless noted otherwise on the Drawings.

2. Provide smoke detector quantities to ensure a minimum of one automatic smoke detector for each 600 square feet of area, (and fraction thereof) for each building space where smoke detectors are required.

3. Provide smoke detector quantities to ensure the centerline to centerline spacing of installed smoke detectors does not exceed 20 feet in the protected area.

4. Locate area protection smoke detectors a minimum of 48 inches horizontal distance from any air transfer grill, air intake grill and air discharge grill.

F. Fire/Smoke Air Dampers

1. Each room with HV/AC air supply and/or air return passing through one or more fire/smoke air dampers shall be provided with automatic smoke detector protection. The smoke detectors shall close the respective room Fire/Smoke dampers when smoke is detected by the room automatic smoke detector and activate the fire alarm control panel.

2. Provide automatic air duct smoke detectors or area protection automatic smoke detectors, for fire/smoke air dampers, based on the Requirements of Condition #1 or Condition #2 as follows:

   a. Condition #1 - Where all the following criteria are true for the respective room, provide air duct smoke detectors in each HVAC air duct connecting to the room:

      1) All the fire/smoke dampers for the room are located in HVAC air ducts for the respective room.
      2) All the air ducts exceed a cross sectional area of 64 square inches.
      3) The minimum air flow rate, during HVAC operation, in all the air ducts exceeds the Requirements of the Air Duct Smoke Detector Manufacturer’s recommendations.
      4) The separation distance between the fire/smoke damper in each air duct and any air discharge louver, any elbow/ bend in the air duct and any fan/blower, is greater than the minimum Installation Distance Requirements of the Air Duct Smoke Detector Manufacturer’s recommendations.

   b. Condition #2 - Where any of the criteria in Condition #1 are not true, provide area protection automatic smoke detectors in the respective room.

3. Provide power and control connections to the fire/smoke dampers, and respective fire/smoke damper smoke detectors. Connect all components to the fire alarm control panel.

4. Connection of fire/smoke air dampers shall comply with the Damper Manufacturer’s recommendations, to insure proper damper and fire alarm system operation.

END OF SECTION 28 46 20
010423/535050

SECTION 32 93 44
PALM TREE PLANTING

PART 1 - GENERAL

1.1 General Conditions:

The requirements of the "General Conditions of this Contract" and the "General Provisions," shall apply to all work of this Section with the same force and effect as though repeated in full herein.

1.2 Scope of Work:

All labor, materials, equipment, and services necessary for and incidental to performing all operations of the work for this section, complete as shown on the Contract Drawings or specified herein. Work includes, but is not necessarily limited to, the following:

A. Palm Tree Planting

B. Clean Up

1.3 Quality Assurance

A. Obtain source of palms for inspection and approval by “Certified Arborist / Palm Specialist.” Contractor to submit qualifications of proposed Certified Arborist to Owner for review and approval. Contractor shall submit hourly rates of Certified Arborist, with all hours of his involvement as specified herein to be paid by Contractor. Certified Arborist shall be involved in all stages of palm tree acquisition, removal, transport, storage, planting, and maintenance. If any discrepancies occur between the Certified Arborist and the plans and specifications, it shall be brought to the immediate attention of the Owner Inspector and resolved in an acceptable manner prior to the commencement of further work. Pre-approved and recommended “Certified Arborist”/”Palm Specialist”: Mr. Gregston D. Young, GDY Consulting; ASCA Registered Consulting Arborist #731 and ISA Board Certified Master Arborist WE-9732B, Tel: 760-250-1229 or GDY@earthlink.net, or approved equal.

B. Submit documentation and permits (if required) that the source of palm trees is approved. Obtain palms from an approved source.

1.4 Product Delivery, and Storage:

A. Delivery

1. Protect plant material during delivery to prevent damage to root ball and fronds.

2. The Contractor shall notify the Owner Inspector seven days prior to delivery of all plant materials and shall submit an itemized list of the plants in each delivery.

B. Storage

1. Store plant material in shade and protect from weather.

2. Maintain and protect plant material not to be planted within four hours.

1.5 Job Conditions:

Perform actual planting only when weather and soil conditions are suitable according to locally accepted practices.

1.6 Scheduling Work:

A. Notify the Engineer a minimum of seven (7) days in advance of balling, prepping and transporting.

B. Palm trees shall be planted at their new locations within 36 hours of removal from original ground.

PART 2 - PRODUCTS

2.1 General:

A. Palms shall be inspected by the “Certified Arborist / Palm Specialist”. Inspection shall include but not be limited to overall health and vigor, frond tying, etc. Any palms rendered unsuitable for planting because of this inspection shall not be used. Re-inspection of suitable palms will be at the Contractor’s expense.

B. All palms must be tagged, inspected, and approved by the “Certified Arborist / Palm Specialist” for planting prior to shipment and installation. All palms shall be matching in form. All palm trunks shall be straight and true.

C. All palms shall be obtained by W.D. Young & Sons Palm Nurseries, contact: Charlie Smith, 760-347-7906.

PART 3 - EXECUTION

3.1 Defronding and Tying:

A. In preparing palm trees for relocation, all dead fronds shall be removed and the entire trunk “Classic” or “Diamond cut” clean to the height of green fronds. Care shall be taken to prevent injury to the trunk of the tree. Green fronds below “10:30-1:30 o’clock” position shall be neatly cut off leaving a 2 inch stub and all fruit and stalks. Only a drain spade shall be used to trim fronds or trunks. Tools must be sanitized with 50% bleach solution between palms. NO chainsaws shall be used in any of the prepping.

B. All remaining fronds above “10:30-1:30 o’clock” position (approximately 35 fronds) shall be lifted up and tied together around the crown in an upright position. Due caution shall be taken not to bind or injure the crown. two-ply sisal twine shall be used in tying up the fronds; wire will not be permitted. After tying,

the tips of the fronds shall be hedged off above the crown approximately 1/4 of the frond length. Defronding and tying work shall be completed within 30 minutes of digging the rootball and carefully laying the palm down. Submit documentation that palms have been reviewed by the “Certified Arborist / Palm Specialist”. and that they are disease free.

3.2 Digging the Rootball:

A. When digging out the rootball, no excavation shall be done closer than 16 inches to the trunk at ground level (rootball should be minimum 48-inches wide by 48-inches wide and the excavation shall extend to a minimum depth of 4 feet. The bottom of the rootball shall be cut off square and perpendicular to the trunk just prior to planting on job site. Under no condition shall the Contractor cut down the size of the rootball in width or depth, without permission from Arborist

B. The Contractor shall not freefall, drag, roll, or abuse the tree or put a strain on the crown at any time. A Soft High Tensile Endless Polyester Lifting Sling with a lifting rating double of the heaviest palm,shall be used around the trunk of the tree while lifting and relocating so as not to scar or skin the trunk in any way. . At no time will trees be balled out and laid on the ground with rootball left exposed to direct sunlight and air. The rootball shall be shaded at all times.

C Palms shall not be stockpiled for replanting.

3.3 Planting of Palms:

A. Excavation for planting shall include the stripping and staking of all acceptable topsoil encountered within the areas to be excavated for the tree holes.

B. Excess soil generated from the planting holes and not used as backfill or in establishing the final grades shall be removed from the site.

C. Protect all areas from excessive compaction when trucking plants or other material to the planting site.

D. Center palm in pit or trench; align with adjacent palm plantings as indicated on plans. All palms shall be matched specimens (height, size, trunk diameter, character, etc. and shall be installed at matched planted heights).

E. Set palm plumb and hold rigidly in position until washed concrete sand has filled all voids, water jetting with 3/4-inch by five-foot-long sticker pipe on garden hose, removing all air pockets, then tamping sand firmly around rootball, before releasing palm..

F. All excavated holes shall have vertical sides with roughened surfaces and shall be of a size that is twice the diameter and 24 inch minimum. Palm shall be planted at the same depth as was originally grown. The top of the root initiation zone shall be even with the soil surface. Provide bracing as required per the recommendations of the certified arborist.

G. Palm back fill mix shall be as recommended by the certified arborist and agronomic soil report. ***The following mix may be used for bidding purposes only.*** Palms shall be backfilled with 100% washed concrete sand. Contractor shall submit sand sample with sieve analysis for review and approval prior to planting.

H. Palm root growth stimulant shall be as recommended by the certified arborist and agronomic soil report. ***The following root growth stimulant may be used for bidding purposes only.*** Root-growth stimulant shall be applied when the backfilling is between 1/2 to 2/3 height up the rootball. Application rate shall be per manufacturer's specifications. Contractor shall submit root growth stimulant product information for Owner review and approval prior to application.

I. Palm planting shall be in accordance with planting detail on construction documents.

J. Palm locations shall be identified from survey of digitized information provided by Architect, upon request of the contractor. Planting shall be done prior to pedestrian hardscape installation. Contractor shall coordinate as necessary with civil engineering plans to set palms at appropriate vertical height. Location of indicated palm trunk centers as indicated on planting plans and details shall be accurately surveyed and staked on-site prior to planting. Actual palm trunk locations, when planted, shall be as surveyed to allow for installation of adjacent pedestrian hardscape as indicated on plans and details.

3.4 Palm Tree Balling, prepping, and Transporting/Transplanting

A. General

1. The Work done hereunder consists of balling, prepping, trees and transporting/transporting said trees as described on the Plans.

2. The Certified Arborist shall be involved in all stages of the balling, prepping and transporting.

3. Erect barricades or signs as necessary to prohibit work, heavy vehicles, storage of materials, trenching, or any other activity detrimental to trees from occurring under tree driplines. Notify Engineer of any intention to work within tree driplines and gain approval prior to Work.

4. Obtain the services of a certified arborist (certified by the International Society of Arboriculture) for the duration of the balling, prepping and transporting of the trees. Prior to transplanting preparation, all palms are to be inspected by the Certified Arborist to evaluate the palms health and vigor, and shall provide written certification of findings and recommendations.

B. Submittals

1. Prior to beginning Work, photograph entire profile of all trees from at least two sides.

2. Submit one set of 4 inch x 6 inch color prints to Owner.

C. Quality Assurance

1. Contractor shall have or shall hire a subcontractor who has a California State Contractor's C-27 License and a minimum of three years' prior experience in balling, prepping and transporting similar sizes and types of trees. A certified arborist provided by the Contractor shall be present on the site to supervise all tree balling, prepping and transplanting.

2. Examine condition of trees to be balled, prepped. Immediately notify the Engineer of any unsatisfactory conditions detrimental to successful relocation. Beginning balling, prepping and transporting of tree means acceptance of conditions by Contractor.

3. Comply with all Federal, State, and local codes, ordinances, safety orders, and regulations of all authorities having jurisdiction over this Work.

D. Materials

1. Horticultural Materials:

a. Fungicide: "Subdue, Maxx + Cleary's 3336 (2 ounces of Subdue and ½ lb. of Cleary's per 100 gallons of water)" or approved equal. When the palm trees are planted, 7-10 gallons of fungicide 'subdue Maxx + Cleary's 3336', shall be applied to the roots of each palm tree in accordance with the printed instructions of the fungicide manufacturer. A copy of said printed instructions shall be furnished to the Engineer before applying any fungicide. Fungicide to be used shall be submitted to the Engineer for approval not less than 2 week days prior to its intended use. Fungicide not approved by the Engineer shall not be used.

b. Fertilizer and Amendments: As specified by certified arborist.

E. Guarantee

Should any tree fail during the balling, prepping and transporting, supply the Engineer with replacement plant material of similar or approved equal quality and size. Engineer is sole judge of need for replacement.

3.5 Cleanup:

Following planting work, all remaining excavation shall be backfilled and compacted in accordance with the requirements of the Owner Inspector. Burying of debris in holes will not be permitted. All excess soil and debris from the relocation work shall be disposed off the site by the Contractor. This site shall be left neat and clean to the satisfaction of the Owner.

3.6 Maintenance:

A. Be responsible for maintenance and guarantee of all installed new palms to the satisfaction of the Owner.

1. Maintenance will include spraying to control or prevent disease and weekly water management to include soil probing and observation of soil moisture sensing devices and palm tree pruning.

2. Pruning shall be accomplished with extension ladders or boom trunk. Climbing spikes shall not be used.

3. Pruning shall be done with reciprocal saws (chain saws will not be allowed).

4. Saw blades will be sterilized between each tree with 50 percent household bleach and 50 percent water for five minutes.

5. Pruning will be done to maintain a neat appearance as approved by the Owner.

6. Proposed pruning schedule is to be submitted to the Owner for approval.

B. 90 days after install, cut and fully remove sisal twine around fronds.

3.7 Inspection:

1. Inspection by Certified Arborist, certified by the International Society of Arboriculture. All palms are to be inspected for disease prior to their preparation for removal from the nursery. Contractor shall contact, schedule, and pay for inspection. The inspection will take place from ground level with field glasses. If disease is suspected, provide manlift for closer inspection of palm crown. Provide the manlift or other equipment as required, at no additional cost to the Owner.

2. All palms will be observed by the Certified Arborist for height, girth, and overall form in meeting design intent. Said observation and approval does not constitute a review of the palm’s health, vigor, and required health-free state, for which the Contractor is solely responsible.

3. Inspection and approval of new tree locations prior to digging pits.

4. Inspection of prepping and tying prior to loading of trees.

5. Inspection of palm planting operations in place.

6. Inspection for final acceptance and release from maintenance following completion of the maintenance period.

B. Inspection/Observation schedule.

Contact Owner and Certified Arborist a minimum of 48 hours (2 working days) in advance of scheduled inspections/observations.

Inspection Observation	Contact: Certified Arborist/Palm Specialist	Owner Engineer
1. Inspection of palm trees at source.	X	X
2. Inspection of defronding, prepping, and tying, as palms are dug in field.	X	
3. Observation of palm tree locations prior to digging planting pits.	X	X
4. Observation of typical palm planting.	X	X
5. Pre-maintenance observation.	X	X
6. *Inspection of palms at 12 months past 90 day maintenance	X	
7. *Inspection of palms at 20 months past 90 day maintenance.	X	

*NOTE: items 6 and 7 to be paid by Owner.

3.8 Guarantee

A. Newly planted palm trees shall be guaranteed against any and all poor, inadequate, or inferior plant materials, and workmanship for two years following planting and acceptance by Owner. Transplanted palm trees shall be guaranteed for one year, under the same conditions above, following planting and acceptance by the Owner.

B. During the guarantee period, any material found dead or not in satisfactory growth condition shall be removed from the site. These tree and disturbed improvements shall be replaced at no expense to the Owner, with the same variety and size as originally designated. Palms and all disturbed areas shall be guaranteed for one year from time of planting and replanting to the satisfaction of the Owner.

APPENDIX A

GEOTECHNICAL INVESTIGATION REPORT

GEOTECHNICAL INVESTIGATION
PROPOSED COMMUNITY AQUATIC AND SENIOR CENTER

1654 West 160th Street
Gardena, California
For
RJM Design Group

SoCalGeo
SOUTHERN CALIFORNIA GEOTECHNICAL
A California Corporation

November 18, 2021

SOUTHERN CALIFORNIA GEOTECHNICAL
A California Corporation

RJM Design Group
31591 Camino Capistrano
San Juan Capistrano, California 92675

Attention: Mr. Eric Chastain, LLA
Principal, Landscape Architect

Project No.: **21G242-1**

Subject: **Geotechnical Investigation**
Proposed Community Aquatic and Senior Center
1654 West 160th Street
Gardena, California

Mr. Chastain:

In accordance with your request, we have conducted a geotechnical investigation at the subject site. We are pleased to present this report summarizing the conclusions and recommendations developed from our investigation.

We sincerely appreciate the opportunity to be of service on this project. We look forward to providing additional consulting services during the course of the project. If we may be of further assistance in any manner, please contact our office.

Respectfully Submitted,

SOUTHERN CALIFORNIA GEOTECHNICAL, INC.

Pablo Montes Jr.
Staff Engineer

Gregory K. Mitchell, GE 2364
Principal Engineer

REGISTERED PROFESSIONAL ENGINEER
GREGORY K. MITCHELL
No. 2364
GEOTECHNICAL
STATE OF CALIFORNIA

Distribution: (1) Addressee

TABLE OF CONTENTS

1.0 EXECUTIVE SUMMARY 1

2.0 SCOPE OF SERVICES 3

3.0 SITE AND PROJECT DESCRIPTION 4

3.1 Site Conditions 4
3.2 Proposed Development 4

4.0 SUBSURFACE EXPLORATION 5

4.1 Scope of Exploration/Sampling Methods 5
4.2 Geotechnical Conditions 5

5.0 LABORATORY TESTING 7

6.0 CONCLUSIONS AND RECOMMENDATIONS 9

6.1 Seismic Design Considerations 9
6.2 Geotechnical Design Considerations 11
6.3 Site Grading Recommendations 13
6.4 Construction Considerations 17
6.5 Foundation Design and Construction 19
6.6 Floor Slab Design and Construction 21
6.7 Exterior Flatwork Design and Construction 22
6.8 Retaining Wall Design and Construction 22
6.9 Pool Design and Construction 25
6.10 Pavement Design Parameters 26

7.0 GENERAL COMMENTS 28

APPENDICES

A Plate 1: Site Location Map
Plate 2: Boring Location Plan
B Boring Logs
C Laboratory Test Results
D Grading Guide Specifications
E Seismic Design Parameters

1.0 EXECUTIVE SUMMARY

Presented below is a brief summary of the conclusions and recommendations of this investigation. Since this summary is not all inclusive, it should be read in complete context with the entire report.

Geotechnical Design Considerations

- Artificial fill soils were encountered at several of the boring locations, extending to depths of 2½ to 8± feet below the existing site grades.
- The fill soils possess varying strengths and are considered to represent undocumented fill. These soils, in their present condition, are not considered suitable for support of the foundation loads of the new structures.
- The fill soils are underlain by moderate strength native alluvium, which possesses favorable consolidation/collapse characteristics.
- Remedial grading will be necessary to remove the undocumented fill soils in their entirety and the upper portion of the near-surface native alluvial soils and replace these materials as compacted structural fill soils.

Site Preparation

- Demolition of the existing structures and pavements will be required in order to facilitate construction of the new building and structures. Demolition should also include all utilities and any other subsurface improvements that will not remain in place for use with the new development. The existing pool shell should be demolished and removed. Debris resultant from demolition should be disposed of offsite. Alternatively, concrete and asphalt debris may be crushed to a maximum 2-inch particle size and incorporated into new structural fills, or it may be crushed into miscellaneous base (CMB).
- Site stripping within vegetated areas should remove include all vegetation, including tree root masses and any organic topsoil.
- The existing pool shell should be removed in its entirety. This area can then be raised to grade using compacted structural fill.
- Remedial grading is recommended to be performed within the proposed building pad area to remove all of the undocumented fill soils, which extend to depths of 2½ to 8± feet at the boring locations. At a minimum, the building pad area should be overexcavated to a depth of at least 6 feet below existing grade and to a depth of at least 3 feet below proposed pad grade, whichever is greater. Overexcavation within the foundation areas is recommended to extend to a depth of at least 3 feet below proposed foundation bearing grade.
- Excavation to reach the new subgrade elevation in the new pool area is expected to remove most or all of the existing undocumented fill soils. Any remaining undocumented fill or low strength alluvium should be removed to a level of competent native alluvium.
- After overexcavation has been completed, the resulting subgrade soils should be evaluated by the geotechnical engineer to identify any additional soils that should be overexcavated, moisture conditioned (or air dried), and recompacted to at least 90 percent of the ASTM D-1557 maximum dry density. The previously excavated soils may then be replaced as compacted structural fill. Fill soils should be moisture conditioned to 2 to 4 percent above the optimum moisture content.

- The new flatwork area subgrade soils are recommended to be scarified to a depth of 12± inches, thoroughly moisture conditioned, or air dried, to 2 to 4 percent above the optimum moisture content, and recompacted to at least 90 percent of the ASTM D-1557 maximum dry density.

Building Foundations

- Conventional shallow foundations, supported in newly placed compacted fill.
- 2,500 lbs/ft^2 maximum allowable soil bearing pressure.
- Reinforcement consisting of at least six (6) No. 5 rebars (3 top and 3 bottom) in strip footings. Additional reinforcement may be necessary for structural considerations.

Building Floor Slab

- Conventional Slab-on-Grade, 5 inches thick.
- Minimum reinforcement of the floor slab should consist of No. 4 bars at 16-inches on center in both directions, due to the presence of expansive soils. The actual floor slab reinforcement should be determined by the structural engineer, based on the imposed slab loading.

Pavements

ASPHALT PAVEMENTS (R = 15)			
Materials	**Thickness (inches)**		
	Auto Parking (TI = 4.0)	Auto Drive Lanes (TI = 5.0)	Light Truck Traffic (TI = 6.0)
Asphalt Concrete	3	3	3½
Aggregate Base	6	9	11
Compacted Subgrade	12	12	12

PORTLAND CEMENT CONCRETE PAVEMENTS (R = 15)			
Materials	**Thickness (inches)**		
	Automobile Parking and Drive Areas (TI = 4.0 to 5.0)	Truck Traffic Areas (TI =6.0)	Fire Lane (TI = 6.5)
PCC	5	5½	6
Compacted Subgrade (95% minimum compaction)	12	12	12

2.0 SCOPE OF SERVICES

The scope of services performed for this project was in accordance with our Proposal No. 21P336, dated July 28, 2021. The scope of services included a visual site reconnaissance, subsurface exploration, field and laboratory testing, and geotechnical engineering analysis to provide criteria for preparing the design of the building foundations, building floor slab, and swimming pool along with site preparation recommendations and construction considerations for the proposed development. The evaluation of the environmental aspects of this site was beyond the scope of services for this geotechnical investigation.

3.0 SITE AND PROJECT DESCRIPTION

3.1 Site Conditions

The site is located at the street address of 1654 West 160th Street in Gardena, California. The site is bounded to the north by 160th Street, to the west by Harvard Boulevard, to the south by residential fourplexes and the Gardena Gymnasium, and to the east by La Salle Avenue. The general location of the site is illustrated on the Site Location Map, enclosed as Plate 1 in Appendix A of this report.

The site consists of multiple rectangular-shaped lots which total 0.9± acres in size. The lots are currently developed with the Primm Memorial Pool and two residential fourplexes with two detached garage structures. The existing structures range from 900 to 2,500± ft² in size. Several of the buildings share common walls. The majority of these buildings are one- to two-story structures of wood frame and stucco construction, and are presumed to be supported on conventional shallow foundations with raised wood floors. The buildings are generally surrounded by Portland cement concrete (PCC) pavements which are in poor to fair condition, with moderate to severe cracking throughout. Turf grass and a few trees surround the buildings.

Detailed topographic information was not available at the time of this report. Based on elevations obtained from Google Earth, and visual observations made at the time of the subsurface investigation, the overall site topography is relatively flat.

3.2 Proposed Development

A preliminary conceptual site plan for the proposed development was provided to our office by the client. Based on the information provided by the client, demolition of the existing buildings, pool and pavements will be necessary to construct new development. The new development, identified as the Community Aquatics & Senior Center, will include a new L-shaped building, a 25-yard competition pool with a diving area, an activity pool, hardscape pathways, and new landscaping areas. The proposed swimming pool is expected to be 8 to 12± feet deep.

Detailed structural information has not been provided. It is assumed that the new building will be a single-story structure of masonry block construction, typically supported on a conventional shallow foundation system with a concrete slab-on-grade floor. Based on the assumed construction, maximum column and wall loads are expected to be on the order of 50 kips and 1 to 4 kips per linear foot, respectively.

No significant amounts of below grade construction, such as basements or crawl spaces, are expected to be included in the proposed development. Based on the assumed topography, cuts and fills of up to 1 to 3± feet are expected to be necessary to achieve the proposed site grades.

4.0 SUBSURFACE EXPLORATION

4.1 Scope of Exploration/Sampling Methods

The subsurface exploration conducted for this project consisted of four (4) borings (identified as Boring Nos. B-1 through B-4) advanced to depths of 20 to 25± feet below the existing site grades. All of the borings were logged during drilling by a member of our staff.

The borings were advanced with hollow-stem augers, by a limited access drilling rig. Representative bulk and relatively undisturbed soil samples were taken during drilling. Relatively undisturbed soil samples were taken with a split barrel "California Sampler" containing a series of one inch long, 2.416± inch diameter brass rings. This sampling method is described in ASTM Test Method D-3550. In-situ samples were also taken using a 1.4± inch inside diameter split spoon sampler, in general accordance with ASTM D-1586. Both of these samplers are driven into the ground with successive blows of a 140-pound weight falling 30 inches. The blow counts obtained during driving are recorded for further analysis. Bulk samples were collected in plastic bags to retain their original moisture content. The relatively undisturbed ring samples were placed in molded plastic sleeves that were then sealed and transported to our laboratory.

The approximate locations of the borings are indicated on the Boring Location Plan, included as Plate 2 in Appendix A of this report. The Boring Logs, which illustrate the conditions encountered at the boring locations, as well as the results of some of the laboratory testing, are included in Appendix B.

4.2 Geotechnical Conditions

Concrete Slabs

All of the borings were drilled through existing concrete slab areas. At Boring Nos. B-1 and B-2, the slabs consist of 3 and 3½± inches of Portland cement concrete (PCC) pavements with no reinforcement. At Boring Nos. B-3 and B-4, the slabs consist of 5± inches of PCC, reinforced with welded wire mesh.

Artificial Fill

Artificial fill soils were encountered at the ground surface at all of the boring locations. The fill soils generally consist of loose to medium dense silty fine sands and fine sandy silts, and stiff to very stiff silty clays, extending to depths of 2½± to 8± feet below the existing site grades. The fill soils possess a disturbed, mottled appearance, resulting in their classification as artificial fill.

Alluvium

Native alluvium was encountered below the fill soils at all of the boring locations, extending to at least the maximum depth explored of 25± feet below existing site grades. The alluvium generally consists of loose to medium dense silty fine sands, clayey fine sands and fine sandy silts, and medium stiff to very stiff silty clays and clayey silts.

Groundwater

Free water was encountered during drilling at Boring Nos. B-3 and B-4 at a depth of about 23½± feet below ground surface. No delayed readings were performed at the boring locations due to caving within the open boreholes after the augers were withdrawn. Based on the moisture contents of the recovered soil samples and the observations made at the time of drilling, the static groundwater table is considered to have existed at a depth of 23½± feet below existing site grades, at the time of the subsurface investigation.

As part of our research, we reviewed available groundwater data in order to determine the historic high groundwater level for the site. The primary reference used to determine the historic groundwater depths in the area of the subject site is CGS Seismic Hazard Zone Report, Open File Report 98-18, Plate 1.3 for the Inglewood 7.5 Minute Quadrangle, which indicates that the historic high groundwater level for the site was 25± feet below the ground surface.

5.0 LABORATORY TESTING

The soil samples recovered from the subsurface exploration were returned to our laboratory for further testing to determine selected physical and engineering properties of the soils. The tests are briefly discussed below. It should be noted that the test results are specific to the actual samples tested, and variations could be expected at other locations and depths.

Classification

All recovered soil samples were classified using the Unified Soil Classification System (USCS), in accordance with ASTM D-2488. The field identifications were then supplemented with additional visual classifications and/or by laboratory testing. The USCS classifications are shown on the Boring Logs and are periodically referenced throughout this report.

Dry Density and Moisture Content

The density has been determined for selected relatively undisturbed ring samples. These densities were determined in general accordance with the method presented in ASTM D-2937. The results are recorded as dry unit weight in pounds per cubic foot. The moisture contents are determined in accordance with ASTM D-2216, and are expressed as a percentage of the dry weight. These test results are presented on the Boring Logs.

Consolidation

Selected soil samples have been tested to determine their consolidation potential, in accordance with ASTM D-2435. The testing apparatus is designed to accept either natural or remolded samples in a one-inch high ring, approximately 2.416 inches in diameter. Each sample is then loaded incrementally in a geometric progression and the resulting deflection is recorded at selected time intervals. Porous stones are in contact with the top and bottom of the sample to permit the addition or release of pore water. The samples are typically inundated with water at an intermediate load to determine their potential for collapse or heave. The results of the consolidation testing are plotted on Plates C-1 through C-4 in Appendix C of this report.

Maximum Dry Density and Optimum Moisture Content

A representative bulk sample was tested for its maximum dry density and optimum moisture content. The results have been obtained using the Modified Proctor procedure, per ASTM D-1557. These tests are generally used to compare the in-situ densities of undisturbed field samples, and for later compaction testing. Additional testing of other soil type or soil mixes may be necessary at a later date. The results of this test are plotted on Plate C-5 in Appendix C of this report.

Direct Shear

Direct shear testing was performed on one (1) representative sample to determine its shear strength parameters. The test was performed in accordance with ASTM D-3080. The testing apparatus is designed to accept either natural or remolded samples in a one-inch high ring, approximately 2.416 inches in diameter. Each of the three samples are then loaded with different

normal loads and the resulting shear strength is determined for that particular normal load. The shearing of the samples is performed at a rate slow enough to permit the dissipation of excess pore water pressure. Porous stones are in contact with the top and bottom of the sample to permit the addition or release of pore water. The results of the direct shear test are presented on Plates C-6 in Appendix C of this report

Expansion Index

The expansion potential of the on-site soils was determined in general accordance with ASTM D-4829. The testing apparatus is designed to accept a 4-inch diameter, 1-in high, remolded sample. The sample is initially remolded to 50± 1 percent saturation and then loaded with a surcharge equivalent to 144 pounds per square foot. The sample is then inundated with water and allowed to swell against the surcharge. The resultant swell or consolidation is recorded after a 24-hour period. The results of the EI testing are as follows:

Sample Identification	Expansion Index	Expansive Potential
B-4 @ 0 to 5 feet	50	Medium

Soluble Sulfates

A representative sample of the near-surface soils was submitted to a subcontracted analytical laboratory for determination of soluble sulfate content. Soluble sulfates are naturally present in soils, and if the concentration is high enough, can result in degradation of concrete which comes into contact with these soils. The results of the soluble sulfate testing are presented below and are discussed further in a subsequent section of this report.

Sample Identification	Soluble Sulfates (%)	Sulfate Classification
B-2 @ 0 to 5 feet	0.002	Not Applicable (S0)

Corrosivity Testing

A representative bulk sample of the near-surface soils was submitted to a subcontracted analytical laboratory for determination of electrical resistivity, pH, and chloride concentrations. The resistivity of the soils is a measure of their potential to attack buried metal improvements such as utility lines. The results of the resistivity and pH testing are presented below:

Sample Identification	Saturated Resistivity (ohm-cm)	pH	Chlorides (mg/kg)	Nitrates (mg/kg)
B-2 @ 0 to 5 feet	6,000	7.5	6.5	2.0

6.0 CONCLUSIONS AND RECOMMENDATIONS

Based on the results of our review, field exploration, laboratory testing and geotechnical analysis, the proposed development is considered feasible from a geotechnical standpoint. The recommendations contained in this report should be taken into the design, construction, and grading considerations.

The recommendations are contingent upon all grading and foundation construction activities being monitored by the geotechnical engineer of record. The recommendations are provided with the assumption that an adequate program of client consultation, construction monitoring, and testing will be performed during the final design and construction phases to verify compliance with these recommendations. Maintaining Southern California Geotechnical, Inc., (SCG) as the geotechnical consultant from the beginning to the end of the project will provide continuity of services. The geotechnical engineering firm providing testing and observation services shall assume the responsibility of Geotechnical Engineer of Record.

The Grading Guide Specifications, included as Appendix D, should be considered part of this report, and should be incorporated into the project specifications. The contractor and/or owner of the development should bring to the attention of the geotechnical engineer any conditions that differ from those stated in this report, or which may be detrimental for the development.

6.1 Seismic Design Considerations

The subject site is located in an area which is subject to strong ground motions due to earthquakes. The performance of a site specific seismic hazards analysis was beyond the scope of this investigation. However, numerous faults capable of producing significant ground motions are located near the subject site. Due to economic considerations, it is not generally considered reasonable to design a structure that is not susceptible to earthquake damage. Therefore, significant damage to structures may be unavoidable during large earthquakes. The proposed structure should, however, be designed to resist structural collapse and thereby provide reasonable protection from serious injury, catastrophic property damage and loss of life.

Faulting and Seismicity

Research of available maps indicates that the subject site is not located within an Alquist-Priolo Earthquake Fault Zone. Furthermore, SCG did not identify any evidence of faulting during the geotechnical investigation. Therefore, the possibility of significant fault rupture on the site is considered to be low.

The potential for other geologic hazards such as seismically induced settlement, lateral spreading, tsunamis, inundation, seiches, flooding, and subsidence affecting the site is considered low.

Seismic Design Parameters

The California Building Code (CBC) provides procedures for earthquake resistant structural design that include considerations for on-site soil conditions, occupancy, and the configuration of the structure including the structural system and height. The seismic design parameters presented below are based on the soil profile and the proximity of known faults with respect to the subject site.

Based on standards in place at the time of this report, the proposed development is expected to be designed in accordance with the requirements of the 2019 edition of the California Building Code (CBC), which was adopted on January 1, 2020.

The 2019 CBC Seismic Design Parameters have been generated using the SEAOC/OSHPD Seismic Design Maps Tool, a web-based software application available at the website www.seismicmaps.org. This software application calculates seismic design parameters in accordance with several building code reference documents, including ASCE 7-16, upon which the 2019 CBC is based. The application utilizes a database of risk-targeted maximum considered earthquake (MCE_R) site accelerations at 0.01-degree intervals for each of the code documents. The tables below were created using data obtained from the application. The output generated from this program is included as Plate E-1 in Appendix E of this report.

The 2019 CBC requires that a site-specific ground motion study be performed in accordance with Section 11.4.8 of ASCE 7-16 for Site Class D sites with a mapped S_1 value greater than 0.2. However, Section 11.4.8 of ASCE 7-16 also indicates an exception to the requirement for a site-specific ground motion hazard analysis for certain structures on Site Class D sites. The commentary for Section 11 of ASCE 7-16 (Page 534 of Section C11 of ASCE 7-16) indicates that "In general, this exception effectively limits the requirements for site-specific hazard analysis to very tall and or flexible structures at Site Class D sites." **Based on our understanding of the proposed development, the seismic design parameters presented below were calculated assuming that the exception in Section 11.4.8 applies to the proposed structure at this site. However, the structural engineer should verify that this exception is applicable to the proposed structure.** Based on the exception, the spectral response accelerations presented below were calculated using the site coefficients (F_a and F_v) from Tables 1613.2.3(1) and 1613.2.3(2) presented in Section 16.4.4 of the 2019 CBC.

2019 CBC SEISMIC DESIGN PARAMETERS

Parameter		Value
Mapped Spectral Acceleration at 0.2 sec Period	S_S	1.795
Mapped Spectral Acceleration at 1.0 sec Period	S_1	0.636
Site Class	---	D
Site Modified Spectral Acceleration at 0.2 sec Period	S_{MS}	1.795
Site Modified Spectral Acceleration at 1.0 sec Period	S_{M1}	1.081
Design Spectral Acceleration at 0.2 sec Period	S_{DS}	1.196
Design Spectral Acceleration at 1.0 sec Period	S_{D1}	0.721

It should be noted that the site coefficient F_v and the parameters S_{M1} and S_{D1} were not included in the SEAOC/OSHPD Seismic Design Maps Tool output for the 2019 CBC. We calculated these parameters-based on Table 1613.2.3(2) in Section 16.4.4 of the 2019 CBC using the value of S_1 obtained from the Seismic Design Maps Tool, assuming that a site-specific ground motion hazards analysis is not required for the proposed buildings at this site.

Liquefaction

Research of the Earthquake Zones of Required Investigation Map (EZRIM) for the Inglewood Quadrangle, published by the California Geological Survey (CGS), indicates that the site is not located in a designated liquefaction hazard zone. In addition, the subsurface conditions encountered at the boring locations are not considered to be conducive to liquefaction. These conditions consist of moderate strength, predominantly cohesive, native alluvial soils. Based on these considerations, liquefaction is not considered to be a design concern for this project.

6.2 Geotechnical Design Considerations

General

The site is generally underlain by artificial fill soils, extending to depths of 2½ to 8± feet below the existing site grades. No documentation regarding the placement and compaction of these soils is expected to become available. The fill soils are therefore considered to be undocumented fill and are not considered suitable for support of the foundations and floor slabs of the new structure. The fill soils are underlain by native alluvium which possesses favorable consolidation/collapse characteristics. However, the near-surface alluvium is expected to be disturbed during demolition procedures. Remedial grading will be necessary within the proposed building area to remove the artificial fill soils in their entirety as well as a portion of the near-surface alluvium, and to replace these soils as compacted structural fill.

Settlement

The recommended remedial grading will remove the existing fill soils as well as a portion of the near-surface alluvium from the new building area and replace these materials as compacted structural fill. The native soils that will remain in place below the recommended depth of overexcavation will not be subject to significant load increases from the foundations of the new structure. Provided that the recommended remedial grading is completed, the post-construction settlement of the proposed structure is expected to be within tolerable limits for a mat foundation.

Soluble Sulfates

The results of the soluble sulfate testing indicate that the selected sample of the on-site soils possesses a sulfate concentration that corresponds to Class S0 with respect to the American Concrete Institute (ACI) Publication 318-14 Building Code Requirements for Structural Concrete and Commentary, Section 4.3. Therefore, specialized concrete mix designs are not considered to be necessary, with regard to sulfate protection purposes. It is, however, recommended that additional soluble sulfate testing be conducted at the completion of rough grading to verify the

soluble sulfate concentrations of the soils which are present at the pad grade within the building and pool areas.

Corrosion Potential

The results of laboratory testing indicate that the on-site soils possess a saturated resistivity of 6,000 ohm-cm, and a pH value of 7.5. These test results have been evaluated in accordance with guidelines published by the Ductile Iron Pipe Research Association (DIPRA). The DIPRA guidelines consist of a point system by which characteristics of the soils are used to quantify the corrosivity characteristics of the site. Resistivity and pH are two of the five factors that enter into the evaluation procedure. Redox potential, relative soil moisture content and sulfides are also included. Although sulfide testing was not part of the scope of services for this project, we have evaluated the corrosivity characteristics of the on-site soils using resistivity, pH and moisture content. Based on these factors, and utilizing the DIPRA procedure, the on-site soils are not considered to be corrosive to ferrous pipes. Therefore, corrosion protection is not expected to be required for cast iron or ductile iron pipes.

Based on American Concrete Institute (ACI) Publication 318 Building Code Requirements for Structural Concrete and Commentary, reinforced concrete that is exposed to external sources of chlorides requires corrosion protection for the steel reinforcement contained within the concrete. ACI 318 defines concrete exposed to moisture and an external source of chlorides as "severe" or exposure category C2. ACI 318 does not clearly define a specific chloride concentration at which contact with the adjacent soil will constitute a "C2" or severe exposure. However, the Caltrans Memo to Designers 10-5, Protection of Reinforcement Against Corrosion Due to Chlorides, Acids and Sulfates, dated June 2010, indicates that soils possessing chloride concentrations greater than 500 mg/kg are considered to be corrosive to reinforced concrete. The results of the laboratory testing indicate a chloride concentration of 6.5 mg/kg. Although the soils contain some chlorides, we do not expect that the chloride concentrations of the tested soils are high enough to constitute a "severe" or C2 chloride exposure. Therefore, a chloride exposure category of C1 is considered appropriate for this site.

Nitrates present in soil can be corrosive to copper tubing at concentrations greater than 50 mg/kg. The tested sample possesses a nitrate concentration of 2.0 mg/kg. Based on this test result, the on-site soils are not considered to be corrosive to copper pipe.

Since SCG does not practice in the area of corrosion engineering, we recommend that the client contact a corrosion engineer to provide a more thorough evaluation.

Expansion

Laboratory testing performed on a representative sample of the near-surface soils indicates that these materials are medium expansive (EI = 50). Based on the presence of expansive soils at this site, special design and construction considerations are warranted. All building pad and flatwork subgrade soils should be properly moisture conditioned and maintained at adequate moisture content throughout the construction process. Further recommendations concerning the expansive soils are presented in subsequent sections of this report. It is recommended that additional expansion index testing be conducted at the completion of rough grading to verify the expansion potential of the as-graded structure pad.

Swimming Pool

The swimming pool should be designed by the pool engineer utilizing the design considerations included with this report. Specifically, the pool should be design in consideration of the medium expansion potential of the on-site soils. Limited remedial grading recommendations for the pool structure are included in a subsequent section of this report.

Shrinkage/Subsidence

Removal and recompaction of the near-surface artificial fill soils and near-surface alluvium is estimated to result in an average shrinkage of 6 to 12 percent. It should be noted that the potential shrinkage estimate is based on dry density testing performed on small-diameter samples taken at the boring locations. If a more accurate and precise shrinkage estimate is desired, SCG can perform a shrinkage study involving several excavated test-pits where in-place densities are determined using in-situ testing methods instead of laboratory density testing on small-diameter samples. Please contact SCG for details and a cost estimate regarding a shrinkage study, if desired.

Minor ground subsidence is expected to occur in the soils below the zone of removal, due to settlement and machinery working. The subsidence is estimated to be 0.10± feet.

These estimates are based on previous experience and the subsurface conditions encountered at the boring locations. The actual amount of subsidence is expected to be variable and will be dependent on the type of machinery used, repetitions of use, and dynamic effects, all of which are difficult to assess precisely.

Grading and Foundation Plan Review

No detailed grading or foundation plans were available at the time of this report. It is therefore recommended that we be provided with copies of the plans, when they become available, for review with regard to the conclusions, recommendations, and assumptions contained within this report.

6.3 Site Grading Recommendations

The grading recommendations presented below are based on the subsurface conditions encountered at the boring locations and our understanding of the proposed development. We recommend that all grading activities be completed in accordance with the Grading Guide Specifications included as Appendix D of this report, unless superseded by site-specific recommendations presented below.

Site Stripping and Demolition

Demolition of some existing structures will be necessary in order to facilitate the construction of the new site improvements. Demolition should also include foundations, floor-slabs, pavements, underground utility lines and any other subsurface improvements that will not remain in place with the new development. The existing pool shell should also be removed in its entirety. Any artificial fill soils associated with the pool should also be removed. Debris resultant from demolition

should be disposed of off-site in accordance with all applicable federal, state, and local regulations. Any adjacent pavements and improvements that are to be reutilized with the new development should be protected from damage by construction traffic.

Initial site preparation should include stripping of any existing surficial vegetation and organic materials. Based on conditions observed at the time of the field exploration, stripping of grass and weed growth will be necessary within limited portions of the site. Any organic material should be disposed of off-site. Removal of any trees should include all of the associated root masses, with the resultant excavation being backfilled with compacted structural fill. The actual extent of site stripping should be determined by the geotechnical engineer at the time of grading, based on the organic content and the stability of the encountered materials.

Treatment of Existing Soils: Building Pad

Remedial grading should be performed within the new building pad area to remove all of the undocumented fill soils and a portion of the near surface native alluvium. Based on the conditions encountered at the borings, these fill soils extend to depths of 2½ to 8± feet below the existing site grades. The existing soils within the new building area are also recommended to be overexcavated to a depth of at least 6 feet below the proposed building pad subgrade elevations and to a depth of 3 feet below existing grade, whichever is greater, to produce a relatively uniform support condition throughout the building pad area. Additionally the overexcavation should also extend to a depth of at least 3 feet below proposed foundation bearing grades.

The overexcavation areas should extend at least 5 feet beyond the building and foundation perimeters and to an extent equal to the depth of fill below the foundations. If the proposed structure incorporates any exterior columns (such as for a canopy or overhang) the overexcavation should also encompass these areas.

Following completion of the overexcavation, the subgrade soils within the building area should be evaluated by the geotechnical engineer to verify their suitability to serve as the structural fill subgrade, as well as to support the foundation loads of the new structure. This evaluation should include proofrolling and probing to identify any soft, loose or otherwise unstable soils that must be removed. Some localized areas of deeper excavation may be required if additional fill materials or loose, porous, or low density native soils are encountered at the base of the overexcavation.

Based on conditions encountered at the exploratory boring locations, some zones of moist to very moist soils will be encountered at or near the base of the recommended overexcavation. Stabilization of the exposed overexcavation subgrade soils may be necessary. Scarification and air drying of these materials may be sufficient to obtain a stable subgrade. However, if highly unstable soils are identified, and if the construction schedule does not allow for delays associated with drying, mechanical stabilization, usually consisting of coarse crushed stone or geotextile, could be necessary. In this event, the geotechnical engineer should be contacted for supplementary recommendations.

After a suitable overexcavation subgrade has been achieved, the exposed soils should be scarified to a depth of at least 12 inches and moisture conditioned or air dried to achieve a moisture content of 2 to 4 percent above optimum moisture content. The subgrade soils should then be recompacted to at least 90 percent of the ASTM D-1557 maximum dry density.

Treatment of Existing Soils: Parking and Drive Areas

Based on economic considerations, overexcavation of the existing artificial fill soils in the new parking and drive areas is not considered warranted, with the exception of areas where lower strength, or unstable, soils are identified by the geotechnical engineer during grading.

Subgrade preparation in the new parking and drive areas should initially consist of removal of all soils disturbed during stripping and demolition operations. The geotechnical engineer should then evaluate the subgrade to identify any areas of additional unsuitable soils. The subgrade soils should then be scarified to a depth of 12± inches, moisture conditioned to 2 to 4 percent above optimum moisture content, and recompacted to at least 90 percent of the ASTM D-1557 maximum dry density.

The grading recommendations presented above for the proposed parking and drive areas assume that the owner and/or developer can tolerate minor amounts of settlement within the proposed parking areas. The grading recommendations presented above do not completely mitigate the extent of the existing artificial fill soils that may be present in the parking and drive areas. As such, settlement and associated pavement distress could occur. Typically, repair of such distressed areas involves significantly lower costs than completely mitigating these soils at the time of construction. If the owner cannot tolerate the risk of such settlements, the parking and drive areas should overexcavated to provide a new layer of structural fill at least 2 feet in thickness.

Treatment of Existing Soils: Flatwork Areas

Subgrade preparation in the new flatwork areas should initially consist of removal of all soils disturbed during stripping and demolition operations. The geotechnical engineer should then evaluate the subgrade to identify any areas of additional unsuitable soils. The subgrade soils should then be scarified to a depth of 12± inches, moisture conditioned to 2 to 4 percent above optimum, and recompacted to at least 90 percent of the ASTM D-1557 maximum dry density. Based on the presence of existing undocumented fill and variable strength alluvial soils throughout the site, it is expected that some isolated areas of additional overexcavation may be required to remove zones of lower strength, unsuitable soils.

Some movement and associated cracking of the flatwork materials should be expected, due to the presence of expansive soils. If this movement and the associated cracking cannot be tolerated, consideration should be given to the use of an imported, non-expansive, granular fill material in order to reduce the potential for differential movements of lightly loaded slabs. This report provides recommendations for moisture conditioning and additional steel reinforcement in the flatwork areas in order to minimize the potential effects of the expansive soils. However, if additional protection is desired, the client should consider the placement of a 2-foot thick layer of non-expansive soil beneath all flatwork.

Treatment of Existing Soils: Retaining Walls and Site Walls

The existing soils within the areas of any proposed retaining walls (less than 5 feet of retained height) should be overexcavated to a depth of 3 feet below foundation bearing grade and replaced as compacted structural fill, as discussed above for the proposed building pads. The foundation

subgrade soils within the areas of any proposed non-retaining site walls should also be overexcavated to a depth of 3 feet below proposed foundation bearing grade. In any case, the overexcavation should be sufficient to remove all artificial fill soils which are encountered during remedial grading. For both types of walls, the overexcavation subgrade soils should be evaluated by the geotechnical engineer prior to scarifying, moisture conditioning and recompacting the upper 12 inches of exposed subgrade soils. The previously excavated soils may then be replaced as compacted structural fill.

If any walls retaining more than 5 feet of soil are proposed for this site, the geotechnical engineer should be contacted to provide supplementary remedial grading recommendations.

Treatment of Existing Soils: Swimming Pool Shell and New Foundation Areas

Based on the expected excavation that will be required in order to construct the new pool, it is expected that most of the fill soils will be removed and the excavation will extend into underlying moderate strength alluvium. After the necessary cuts to reach the new pool subgrade elevation have been made, any remaining undocumented fill soils should be removed. The subgrade soils within the swimming pool area should then be evaluated by the geotechnical engineer to verify their suitability to serve as the structural fill subgrade, as well as to support the new pool. The new pool subgrade should consist of competent native alluvium or newly-placed engineered fill soils. This evaluation should include proofrolling and probing to identify any soft, loose or otherwise unstable soils that must be removed. Some localized areas of deeper excavation may be required if additional fill or loose, porous, or low density native soils are encountered at the base of the overexcavation.

The bottom and sidewalls of the proposed pool are expected to be constructed using shotcrete. Remedial grading and compaction of the soils present in the sidewalls of the pool area is not expected to be necessary based on these construction methods.

Fill Placement

- Fill soils should be placed in thin (6± inches), near-horizontal lifts, moisture conditioned to 2 to 4 percent above the optimum moisture content, and compacted. Drying of the some of the on-site soils may be required before placement and compaction as fill.
- On-site soils may be used for fill provided they are cleaned of any debris to the satisfaction of the geotechnical engineer.
- All grading and fill placement activities should be completed in accordance with the requirements of the 2019 CBC and the grading code of the city of Gardena.
- All fill soils should be compacted to at least 90 percent of the ASTM D-1557 maximum dry density. Fill soils should be well mixed.
- Compaction tests should be performed periodically by the geotechnical engineer as random verification of compaction and moisture content. These tests are intended to aid the contractor. Since the tests are taken at discrete locations and depths, they may not be indicative of the entire fill and therefore should not relieve the contractor of his responsibility to meet the job specifications.

Imported Structural Fill

All imported structural fill should consist of very low expansive (EI < 20), well graded soils possessing at least 10 percent fines (that portion of the sample passing the No. 200 sieve). Additional specifications for structural fill are presented in the Grading Guide Specifications, included as Appendix D.

Utility Trench Backfill

In general, all utility trench backfill should be compacted to at least 90 percent of the ASTM D-1557 maximum dry density. Compacted trench backfill should conform to the requirements of the local grading code, and more restrictive requirements may be indicated by the city of Gardena. All utility trench backfills should be witnessed by the geotechnical engineer. The trench backfill soils should be compaction tested where possible; probed and visually evaluated elsewhere.

Utility trenches which parallel a footing, and extending below a 1h:1v plane projected from the outside edge of the footing should be backfilled with structural fill soils, compacted to at least 90 percent of the ASTM D-1557 standard. Pea gravel backfill should not be used for these trenches.

6.4 Construction Considerations

Excavation Considerations

The near surface soils generally consist of a variety of materials, including sands, silts, and clays. Some of these materials may be subject to caving within shallow excavations. Where caving occurs within shallow excavations, flattened excavation slopes may be sufficient to provide excavation stability. On a preliminary basis, temporary excavation slopes should be made no steeper than 2h:1v. The contractor should take all necessary precautions during grading and foundation construction to prevent damage to improvements which are adjacent to the proposed development. Deeper excavations may require some form of external stabilization such as shoring or bracing. Maintaining adequate moisture content within the near-surface soils will improve excavation stability. All excavation activities on this site should be conducted in accordance with Cal-OSHA regulations.

Expansive Soils

The near-surface soils at this site are potentially expansive. Therefore, care should be given to proper moisture conditioning of all on-site soils to a moisture content of 2 to 4 percent above the Modified Proctor optimum during site grading. All imported fill soils should have very low expansive characteristics. In addition to adequately moisture conditioning the subgrade soils and fill soils during grading, special care must be taken to maintain moisture content of these soils at 2 to 4 percent above the Modified Proctor optimum. This will require the contractor to frequently moisture condition these soils throughout the grading process, unless grading occurs during a period of relatively wet weather.

Due to the presence of expansive soils at this site, provisions should be made to limit the potential for surface water to penetrate the soils immediately adjacent to the structures. These provisions

should include directing surface runoff into rain gutters and area drains, reducing the extent of landscaped areas around the structures, and sloping the ground surface away from the buildings. Where possible, it is recommended that landscaped planters not be located immediately adjacent to the buildings. If landscaped planters around the buildings are necessary, it is recommended that drought tolerant plants or a drip irrigation system be utilized, to minimize the potential for deep moisture penetration around the structures. Presented below is a list of additional soil moisture control recommendations that should be considered by the owner, developer, and civil engineer:

- Ponding and areas of low flow gradients in unpaved walkways, grass and planter areas should be avoided. In general, minimum drainage gradients of 2 percent should be maintained in unpaved areas.
- Bare soil within five feet of proposed structures should be sloped at a minimum five percent gradient away from the structure (about three inches of fall in five feet), or the same area could be paved with a minimum surface gradient of one percent. Pavement is preferable.
- Decorative gravel ground cover tends to provide a reservoir for surface water and may hide areas of ponding or poor drainage. Decorative gravel is, therefore, not recommended and should not be utilized for landscaping unless equipped with a subsurface drainage system designed by a licensed landscape architect.
- Positive drainage devices, such as graded swales, paved ditches, and catch basins should be installed at appropriate locations within the area of proposed development.
- Concrete walks and flatwork should not obstruct the free flow of surface water to the appropriate drainage devices.
- Area drains should be recessed below grade to allow free flow of water into the drain. Concrete or brick flatwork joints should be sealed with mortar or flexible mastic.
- Gutter and downspout systems should be installed to capture all discharge from roof areas. Downspouts should discharge directly into a pipe or paved surface system to be conveyed offsite.
- Enclosed planters adjoining, or in close proximity to proposed structures, should be sealed at the bottom and provided with subsurface collection systems and outlet pipes.
- Depressed planters should be raised with soil to promote runoff (minimum drainage gradient two percent or five percent, see above), and/or equipped with area drains to eliminate ponding.
- Drainage outfall locations should be selected to avoid erosion of slopes and/or properly armored to prevent erosion of graded surfaces. No drainage should be directed over or towards adjoining slopes.
- All drainage devices should be maintained on a regular basis, including frequent observations during the rainy season to keep the drains free of leaves, soil and other debris.
- Landscape irrigation should conform to the recommendations of the landscape architect and should be performed judiciously to preclude either soaking or excessive drying of the foundation soils. This should entail regular watering during the drier portions of the year and little or no irrigation during the rainy season. Automatic sprinkler systems should, therefore, be switched to manual operation during the rainy season. Good irrigation practice typically requires frequent application of limited quantities of water that are sufficient to sustain plant growth, but do not excessively wet the soils. Ponding and/or run-off of irrigation water are indications of excessive watering.

Other provisions, as determined by the landscape architect or civil engineer, may also be appropriate.

Moisture Sensitive Subgrade Soils

The near-surface soils generally consist of moist to very moist silty sands and silty clays and will become unstable if exposed to significant moisture infiltration or disturbance by construction

traffic. If grading occurs during a period of relatively wet weather, an increase in subgrade instability should also be expected. The site should, therefore, be graded to prevent ponding of surface water and to prevent water from running into excavations.

As discussed in Section 6.3 of this report, unstable subgrade soils are likely to be encountered at the base of the overexcavations within the proposed building areas. The extent of unstable subgrade soils will to a large degree depend on methods used by the contractor to avoid adding additional moisture to these soils or disturbing soils which already possess high moisture contents. If grading occurs during a period of relatively wet weather, an increase in subgrade instability should also be expected. Due to the potential for subgrade instability, it is recommended that only tracked vehicles be utilized for grading or construction activities that require traffic over the exposed subgrade soils.

If the construction schedule dictates that site grading will occur during a period of wet weather, allowances should be made for costs and delays associated with drying the on-site soils or import of a drier, less moisture sensitive fill material. Grading during wet or cool weather may also increase the depth of overexcavation in the pad areas as well as the need for and/or the thickness of the crushed stone stabilization layer, discussed in Section 6.3 of this report.

Groundwater

The static groundwater table at this site is considered to exist at a depth of 23½± feet. Therefore, groundwater is not expected to impact excavations during grading or foundation construction activities.

6.5 Foundation Design and Construction

Based on the preceding grading recommendations, it is assumed that the new building pad will be underlain by new structural fill soils used to replace the artificial fill soils and the upper portion of the near-surface native alluvium. These structural fill soils are expected to extend to a depth of at least 3 feet below proposed foundation bearing grade. Based on this subsurface profile, the proposed building may be supported on conventional shallow foundations.

Shallow Foundation Design Parameters

New square and rectangular footings may be designed as follows:

- Maximum, net allowable soil bearing pressure: 2,500 lbs/ft^2.
- Minimum wall/column footing width: 14 inches/24 inches.
- Minimum longitudinal steel reinforcement within strip footings: Six (6) No. 5 rebars (3 top and 3 bottom) in strip footings, due to the presence of expansive soils.
- Minimum foundation embedment: 12 inches into suitable structural fill soils, and at least 18 inches below adjacent exterior grade. Interior column footings may be placed immediately beneath the floor slab.

- It is recommended that the perimeter building foundations be continuous across all exterior doorways. Any flatwork adjacent to the exterior doors should be doweled into the perimeter foundations in a manner determined by the structural engineer.

The allowable bearing pressures presented above may be increased by 1/3 when considering short duration seismic and wind loads. Additional rigidity may be necessary for structural considerations. The actual design of the foundations should be determined by the structural engineer.

Foundation Construction

The foundation subgrade soils should be evaluated at the time of overexcavation, as discussed in Section 6.3 of this report. It is further recommended that the foundation subgrade soils be evaluated by the geotechnical engineer immediately prior to steel or concrete placement. Within the new building area, soils suitable for direct foundation support should consist of newly placed structural fill, compacted to at least 90 percent of the ASTM D-1557 maximum dry density. Any unsuitable materials should be removed to a depth of suitable bearing compacted structural fill or competent native alluvial soils, with the resulting excavations backfilled with compacted fill soils. As an alternative, lean concrete slurry (500 to 1,500 psi) may be used to backfill such isolated overexcavations.

The foundation subgrade soils should also be properly moisture conditioned to 2 to 4 percent of the Modified Proctor optimum, to a depth of at least 12 inches below bearing grade**. Since it is typically not feasible to increase the moisture content of the floor slab and foundation subgrade soils once rough grading has been completed, care should be taken to maintain the moisture content of the building pad subgrade soils throughout the construction process.**

Estimated Foundation Settlements

Post-construction total and differential settlements of shallow foundations designed and constructed in accordance with the previously presented recommendations are estimated to be less than 1.0 and 0.5 inches, respectively. Differential movements are expected to occur over a 30-foot span, thereby resulting in an angular distortion of less than 0.002 inches per inch.

Lateral Load Resistance

Lateral load resistance will be developed by a combination of friction acting at the base of foundations and slabs and the passive earth pressure developed by footings below grade. The following friction and passive pressure may be used to resist lateral forces:

- Passive Earth Pressure: 250 lbs/ft^3
- Friction Coefficient: 0.25

These are allowable values, and include a factor of safety. When combining friction and passive resistance, the passive pressure component should be reduced by one-third. These values assume

that footings will be poured directly against compacted structural fill soils. The maximum allowable passive pressure is 2,500 lbs/ft^2.

6.6 Floor Slab Design and Construction

Subgrades which will support new floor slabs should be prepared in accordance with the recommendations contained in the ***Site Grading Recommendations*** section of this report. Based on the anticipated grading which will occur at this site, the floor of the new building may be constructed as a conventional slab-on-grade supported on newly placed structural fill soils, extending to a depth of at least 3 feet below finished pad grade. Based on geotechnical considerations, the floor slabs may be designed as follows:

- Minimum slab thickness: 5 inches.

- Minimum slab reinforcement: No. 4 bars at 16 inches on-center, in both directions, due to the presence of expansive soils at the site. The actual floor slab reinforcement should be determined by the structural engineer based on the imposed loading.

- Slab underlayment: If moisture sensitive floor coverings will be used or if vapor transmission into the area above the building slab is problematic, then minimum slab underlayment should consist of a moisture vapor barrier constructed below the entire area of the proposed slab. The moisture vapor barrier should meet or exceed the Class A rating as defined by ASTM E 1745-97 and have a permeance rating less than 0.01 perms as described in ASTM E 96-95 and ASTM E 154-88. A polyolefin material such as 15-mil Stego Wrap Vapor barrier or equivalent will meet these specifications. The moisture vapor barrier should be properly constructed in accordance with all applicable manufacturer specifications. Given that a rock free subgrade is anticipated and that a capillary break is not required, sand below the barrier is not required. The need for sand and/or the amount of sand above the moisture vapor barrier should be specified by the structural engineer or concrete contractor. The selection of sand above the barrier is not a geotechnical engineering issue and hence outside our purview. Where moisture sensitive floor coverings are not anticipated, the vapor barrier may be eliminated.

- Moisture condition the floor slab subgrade soils to 2 to 4 percent above the Modified Proctor optimum moisture content, to a depth of 12 inches. The moisture content of the floor slab subgrade soils should be verified by the geotechnical engineer within 24 hours prior to concrete placement.

- Proper concrete curing techniques should be utilized to reduce the potential for slab curling or the formation of excessive shrinkage cracks.

The actual design of the floor slabs should be completed by the structural engineer to verify adequate thickness and reinforcement.

6.7 Exterior Flatwork Design and Construction

Subgrades which will support new exterior slabs-on-grade for sidewalks, patios, and other concrete flatwork, should be prepared in accordance with the recommendations contained in the ***Grading Recommendations*** section of this report. As noted previously, flatwork supported on the existing medium expansive soils will be subject to minor to moderate amounts of movement as the moisture content within the subgrade soils fluctuates. This movement may cause cracking or other distress within the flatwork. If additional protection against flatwork cracking is desired, consideration should be given to the placement of a 1- to 2-foot-thick layer of very low expansive structural fill beneath all flatwork sections. Assuming that the flatwork is supported on the existing soils, exterior slabs on grade may be designed as follows:

- Minimum slab thickness: 4½ inches due to the presence of medium expansive soils.
- Minimum slab reinforcement: No. 4 bars at 18 inches on center, in both directions, due to the presence of medium to highly expansive soils.
- The flatwork at building entry areas should be structurally connected to the perimeter foundation that is recommended to span across the door opening. This recommendation is designed to reduce the potential for differential movement at this joint.
- Moisture condition the flatwork subgrade soils to at least 2 to 4 percent above optimum moisture content, to a depth of at least 12 inches. Adequate moisture conditioning should be verified by the geotechnical engineer 24 hours prior to concrete placement.
- Proper concrete curing techniques should be utilized to reduce the potential for slab curling or the formation of excessive shrinkage cracks.
- Control joints should be provided at a maximum spacing of 8 feet on center in two directions for slabs and at 6 feet on center for sidewalks. Control joints are intended to direct cracking. Minor cracking of exterior concrete slabs on grade should be expected.
- Where flatwork is immediately adjacent to landscape planters, a thickened edge should be utilized. This edge should extend to a depth of at least 12 inches and incorporate longitudinal reinforcement consisting of at least two No. 4 bars.
- Expansion or felt joints should be used at the interface of exterior slabs on grade and any fixed structures to permit relative movement.

These recommendations are contingent upon additional expansion index testing being conducted at the completion of rough grading, to verify the actual expansion potential of the flatwork subgrade soils

6.8 Retaining Wall Design and Construction

In addition to the proposed swimming pool, the proposed development may require some small retaining walls (less than 5± feet in height).

Retaining Wall Design Parameters

Based on the soil conditions encountered at the boring locations, the following parameters may be used in the design of new retaining walls for this site. **Some of the near-surface soils consist of medium expansive silty clays. These materials are not considered suitable for use as retaining wall backfill**. It is recommended that very low to non-expansive on-site sands and silty sands, or a select imported material, be used to backfill all retaining walls. These materials are recommended to possess an internal angle of friction of at least 30 degrees when compacted to 90 percent relative compaction.

If desired, SCG could provide design parameters for an alternative select backfill material behind the retaining walls. The use of select backfill material could result in lower lateral earth pressures. In order to use the design parameters for the imported select fill, this material must be placed within the entire active failure wedge. This wedge is defined as extending from the heel of the retaining wall upwards at an angle of approximately 60° from horizontal. If select backfill material behind the retaining wall is desired, SCG should be contacted for supplementary recommendations.

RETAINING WALL DESIGN PARAMETERS

Design Parameter		**Soil Type**
		On-Site Silty Sands or Imported Material
Internal Friction Angle (ϕ)		30°
Unit Weight		130 lbs/ft^3
Equivalent Fluid Pressure:	Active Condition (level backfill)	43 lbs/ft^3
	Active Condition (2h:1v backfill)	70 lbs/ft^3
	At-Rest Condition (level backfill)	65 lbs/ft^3

Regardless of the backfill type, the walls should be designed using a soil-footing coefficient of friction of 0.25 and an equivalent passive pressure of 250 lbs/ft^3. The structural engineer should incorporate appropriate factors of safety in the design of the retaining walls.

The active earth pressure may be used for the design of retaining walls that do not directly support structures or support soils that in turn support structures and which will be allowed to deflect. The at-rest earth pressure should be used for walls that will not be allowed to deflect such as those which will support foundation bearing soils, or which will support foundation loads directly.

Where the soils on the toe side of the retaining wall are not covered by a "hard" surface such as a structure or pavement, the upper 1 foot of soil should be neglected when calculating passive resistance due to the potential for the material to become disturbed or degraded during the life of the structure.

Seismic Lateral Earth Pressures

In accordance with the 2019 CBC, any retaining walls more than 6 feet in height must be designed for seismic lateral earth pressures. The recommended seismic pressure distribution is triangular in shape, assumed to occur at the top of the wall, decreasing to 0 at the base of the wall. For a level backfill condition behind the top of the wall, the seismic lateral earth pressure is 35H lbs/ft^2, where H is the overall height of the wall. The seismic pressure distribution is based on the Mononobe-Okabe equation, utilizing a design acceleration of 0.571g. The 2019 CBC does not provide definitive guidance on determination of the design acceleration to be used in generating the seismic lateral earth pressure. In accordance with standard geotechnical practice, we have calculated the design acceleration as $^2/_3$ of the PGA_M.

Backfill Material

Retaining wall backfill soils should consist of very low expansive on-site soils or imported select structural fill possessing an expansion index less than 20. All backfill material placed within 3 feet of the back wall face should have a particle size no greater than 3 inches. The retaining wall backfill materials should be well graded.

It is recommended that a properly installed prefabricated drainage composite such as the MiraDRAIN 6000XL (or approved equivalent), which is specifically designed for use behind retaining walls be used. If the drainage composite material is not covered by an impermeable surface, such as a structure or pavement, a 12-inch thick layer of a low permeability soil should be placed over the backfill to reduce surface water migration to the underlying soils. The drainage composite should be separated from the backfill soils by a suitable geotextile, approved by the geotechnical engineer.

All retaining wall backfill should be placed and compacted under engineering-controlled conditions in the necessary layer thicknesses to ensure an in-place density between 90 and 93 percent of the maximum dry density as determined by the Modified Proctor test (ASTM D1557). Care should be taken to avoid over-compaction of the soils behind the retaining walls, and the use of heavy compaction equipment should be avoided.

Subsurface Drainage

As previously indicated, the retaining wall design parameters are based upon drained backfill conditions. Consequently, some form of permanent drainage system will be necessary in conjunction with the appropriate backfill material. Subsurface drainage may consist of either:

- A weep hole drainage system typically consisting of a series of 2-inch diameter holes in the wall situated slightly above the ground surface elevation on the exposed side of the wall and at an approximate 10-foot on-center spacing. Alternatively, 4-inch diameter holes at an approximate 20-foot on-center spacing can be used for this type of drainage system. In addition, the weep holes should include a 2 cubic foot pocket of open graded gravel, surrounded by an approved geotextile fabric, at each weep hole location.

- A 4-inch diameter perforated pipe surrounded by 2 cubic feet of gravel per linear foot of drain placed behind the wall, above the retaining wall footing. The gravel layer should be

wrapped in a suitable geotextile fabric to reduce the potential for migration of fines. The footing drain should be extended to daylight or tied into a storm drainage system. The actual design of this type of system should be determined by the civil engineer to verify that the drainage system possesses the adequate capacity and slope for its intended use.

6.9 Pool Design and Construction

Pool Setback

The setback between the pool and a top of slope condition, or top of retaining wall, is to be equal to one-half the building footing setback distance discussed in Section 1808.7.3 of the 2019 CBC. It is recommended that the proposed swimming pool wall be designed such that it is capable of supporting the water in the pool without relying on the adjacent soils for lateral support.

Geotechnical Design Parameters

The following recommendation may be utilized in the swimming pool design, if applicable.

- Maximum, net allowable soil bearing pressure: 2,000 lbs/ft^2.
- Minimum pool shell thickness: 6 inches
- Swimming pool bond beam minimum longitudinal steel reinforcement: Four (4) No. 4 rebars (2 top and 2 bottom)
- The pool bottom should be founded in competent native materials, which have been evaluated by the geotechnical engineer, or newly placed engineered fill.
- Passive Earth Pressure: 220 lbs/ft^3
- Friction Coefficient: 0.25

These are allowable values, and include a factor of safety. When combining friction and passive resistance, the passive pressure component should be reduced by one-third. These values assume that footings will be poured directly against compacted structural fill. The maximum allowable passive pressure is 2000 lbs/ft^2. The actual design of the swimming pool should be completed by the structural engineer.

Pool Wall Design and Construction

The design of the pool shell should include an analysis to verify that the pool walls can support the loads of the surcharging soils when empty.

The following parameters may be used in the design of new pool walls for this site. We have provided parameters assuming the use of on-site soils for retaining wall backfill. The on-site soils generally consist silty sands, silty clays and clayey sands. Based on the results of laboratory testing, these materials possess a friction angle of at least 27 degrees.

POOL WALL DESIGN PARAMETERS

Design Parameter	Soil Type
	On-Site Sandy Silts, Silty Clays and Sandy Clays
Internal Friction Angle (ϕ)	27°
Unit Weight	125 lbs/ft^3
Equivalent Fluid Pressure: At-Rest Condition (level backfill)	88 lbs/ft^3

6.10 Pavement Design Parameters

Site preparation in the pavement area should be completed as previously recommended in the ***Site Grading Recommendations*** section of this report. The subsequent pavement recommendations assume proper drainage and construction monitoring and are based on either PCA or CALTRANS design parameters for a twenty (20) year design period. However, these designs also assume a routine pavement maintenance program to obtain the anticipated 20-year pavement service life.

Pavement Subgrades

It is anticipated that the new pavements will be supported on the existing soils that have been scarified, moisture conditioned, and recompacted. These materials generally consist of silty sands and silty clays. These materials are expected to exhibit poor pavement support characteristics, with estimated R-values of 15 to 25. Since R-value testing was not included in the scope of services for the current project, the subsequent pavement designs are based upon a conservatively assumed R-value of 15. Any fill material imported to the site should have support characteristics equal to or greater than that of the on-site soils and be placed and compacted under engineering controlled conditions.

Asphaltic Concrete

Presented below are the recommended thicknesses for new flexible pavement structures consisting of asphaltic concrete over a granular base. The pavement designs are based on the traffic indices (TI's) indicated. The client and/or civil engineer should verify that these TI's are representative of the anticipated traffic volumes. If the client and/or civil engineer determine that the expected traffic volume will exceed the applicable traffic index, we should be contacted for supplementary recommendations. The design traffic indices equate to the following approximate daily traffic volumes over a 20-year design life, assuming six operational traffic days per week.

Traffic Index	No. of Heavy Trucks per Day
4.0	0
5.0	1
6.0	3

For the purpose of the traffic volumes indicated above, a truck is defined as a 5-axle tractor trailer unit with one 8-kip axle and two 32-kip tandem axles. All of the traffic indices allow for 1,000 automobiles per day.

ASPHALT PAVEMENTS (R = 15)			
Materials	**Thickness (inches)**		
	Auto Parking (TI = 4.0)	Auto Drive Lanes (TI = 5.0)	Light Truck Traffic (TI = 6.0)
Asphalt Concrete	3	3	3½
Aggregate Base	6	9	11
Compacted Subgrade	12	12	12

The aggregate base course should be compacted to at least 95 percent of the ASTM D-1557 maximum dry density. The asphaltic concrete should be compacted to at least 95 percent of the Marshall maximum density, as determined by ASTM D-2726. The aggregate base course may consist of crushed aggregate base (CAB) or crushed miscellaneous base (CMB), which is a recycled gravel, asphalt and concrete material. The gradation, R-Value, Sand Equivalent, and Percentage Wear of the CAB or CMB should comply with appropriate specifications contained in the current edition of the "Greenbook" Standard Specifications for Public Works Construction.

Portland Cement Concrete

The preparation of the subgrade soils within Portland cement concrete pavement areas should be performed as previously described for proposed asphalt pavement areas. The minimum recommended thicknesses for the Portland Cement Concrete pavement sections are as follows:

PORTLAND CEMENT CONCRETE PAVEMENTS (R = 15)			
Materials	**Thickness (inches)**		
	Automobile Parking and Drive Areas (TI = 4.0 to 5.0)	Truck Traffic Areas (TI =6.0)	Fire Lane (TI = 6.5)
PCC	5	5½	6
Compacted Subgrade (95% minimum compaction)	12	12	12

The concrete should have a 28-day compressive strength of at least 3,000 psi. Reinforcing within all pavements should be designed by the structural engineer. The maximum joint spacing within all of the PCC pavements is recommended to be equal to or less than 30 times the pavement thickness. The actual joint spacing and reinforcing of the Portland cement concrete pavements should be determined by the structural engineer.

7.0 GENERAL COMMENTS

This report has been prepared as an instrument of service for use by the client, in order to aid in the evaluation of this property and to assist the architects and engineers in the design and preparation of the project plans and specifications. This report may be provided to the contractor(s) and other design consultants to disclose information relative to the project. However, this report is not intended to be utilized as a specification in and of itself, without appropriate interpretation by the project architect, civil engineer, and/or structural engineer. The reproduction and distribution of this report must be authorized by the client and Southern California Geotechnical, Inc. Furthermore, any reliance on this report by an unauthorized third party is at such party's sole risk, and we accept no responsibility for damage or loss which may occur. The client(s)' reliance upon this report is subject to the Engineering Services Agreement, incorporated into our proposal for this project.

The analysis of this site was based on a subsurface profile interpolated from limited discrete soil samples. While the materials encountered in the project area are considered to be representative of the total area, some variations should be expected between boring locations and sample depths. If the conditions encountered during construction vary significantly from those detailed herein, we should be contacted immediately to determine if the conditions alter the recommendations contained herein.

This report has been based on assumed or provided characteristics of the proposed development. It is recommended that the owner, client, architect, structural engineer, and civil engineer carefully review these assumptions to ensure that they are consistent with the characteristics of the proposed development. If discrepancies exist, they should be brought to our attention to verify that they do not affect the conclusions and recommendations contained herein. We also recommend that the project plans and specifications be submitted to our office for review to verify that our recommendations have been correctly interpreted.

The analysis, conclusions, and recommendations contained within this report have been promulgated in accordance with generally accepted professional geotechnical engineering practice. No other warranty is implied or expressed.

APPENDIX A

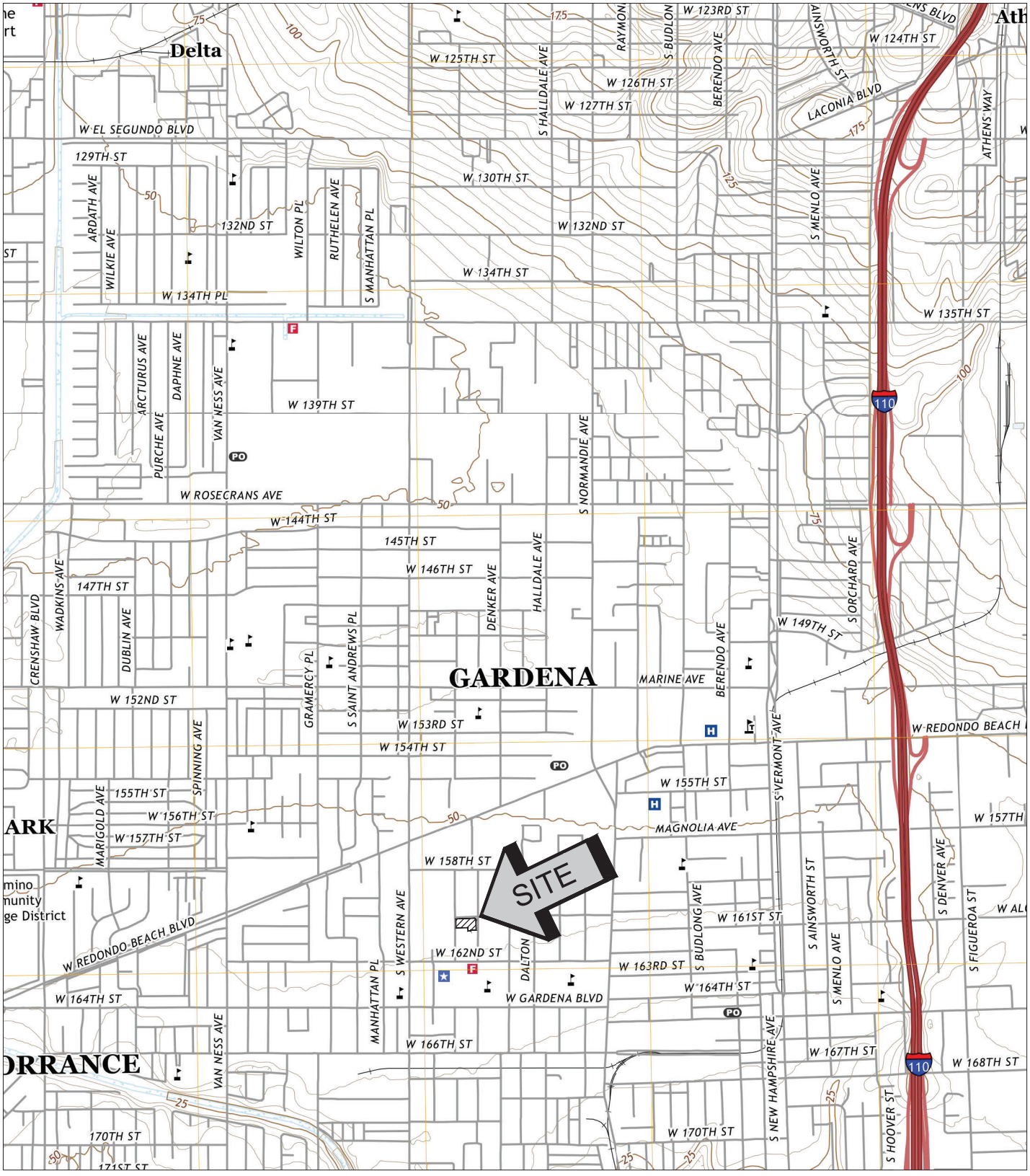

SOURCE: USGS TOPOGRAPHIC MAP OF THE INGLEWOOD QUADRANGLE, LOS ANGELES COUNTY, CALIFORNIA, 2018.

SITE LOCATION MAP

PROPOSED COMMUNITY AQUATIC AND SENIOR CENTER

GARDENA, CALIFORNIA

SCALE: 1" = 2000'	
DRAWN: OS CHKD: GKM	
SCG PROJECT 21G242-1	
PLATE 1	

SoCalGeo

SOUTHERN CALIFORNIA GEOTECHNICAL



NORTH

SoCalGeo

GEOTECHNICAL LEGEND

APPROXIMATE BORING LOCATION

NOTE: CONCEPTUAL SITE PLAN PREPARED BY RJM DESIGN GROUP.
AERIAL PHOTOGRAPH OBTAINED FROM GOOGLE EARTH

BORING LOCATION PLAN

PROPOSED COMMUNITY AQUATIC AND SENIOR CENTER

GARDENA, CALIFORNIA

SCALE: 1" = 30'	
DRAWN: OS CHKD: GKM	
SCG PROJECT 21G242-1	
PLATE 2	

SoCalGeo

SOUTHERN
CALIFORNIA
GEOTECHNICAL

APPENDIX B

BORING LOG LEGEND

SAMPLE TYPE	GRAPHICAL SYMBOL	SAMPLE DESCRIPTION
AUGER		SAMPLE COLLECTED FROM AUGER CUTTINGS, NO FIELD MEASUREMENT OF SOIL STRENGTH. (DISTURBED)
CORE		ROCK CORE SAMPLE: TYPICALLY TAKEN WITH A DIAMOND-TIPPED CORE BARREL. TYPICALLY USED ONLY IN HIGHLY CONSOLIDATED BEDROCK.
GRAB		SOIL SAMPLE TAKEN WITH NO SPECIALIZED EQUIPMENT, SUCH AS FROM A STOCKPILE OR THE GROUND SURFACE. (DISTURBED)
CS		CALIFORNIA SAMPLER: 2-1/2 INCH I.D. SPLIT BARREL SAMPLER, LINED WITH 1-INCH HIGH BRASS RINGS. DRIVEN WITH SPT HAMMER. (RELATIVELY UNDISTURBED)
NSR		NO RECOVERY: THE SAMPLING ATTEMPT DID NOT RESULT IN RECOVERY OF ANY SIGNIFICANT SOIL OR ROCK MATERIAL.
SPT	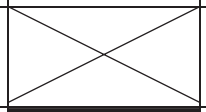	STANDARD PENETRATION TEST: SAMPLER IS A 1.4 INCH INSIDE DIAMETER SPLIT BARREL, DRIVEN 18 INCHES WITH THE SPT HAMMER. (DISTURBED)
SH		SHELBY TUBE: TAKEN WITH A THIN WALL SAMPLE TUBE, PUSHED INTO THE SOIL AND THEN EXTRACTED. (UNDISTURBED)
VANE	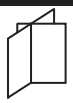	VANE SHEAR TEST: SOIL STRENGTH OBTAINED USING A 4 BLADED SHEAR DEVICE. TYPICALLY USED IN SOFT CLAYS-NO SAMPLE RECOVERED.

COLUMN DESCRIPTIONS

DEPTH: Distance in feet below the ground surface.

SAMPLE: Sample Type as depicted above.

BLOW COUNT: Number of blows required to advance the sampler 12 inches using a 140 lb hammer with a 30-inch drop. 50/3" indicates penetration refusal (>50 blows) at 3 inches. WH indicates that the weight of the hammer was sufficient to push the sampler 6 inches or more.

POCKET PEN.: Approximate shear strength of a cohesive soil sample as measured by pocket penetrometer.

GRAPHIC LOG: Graphic Soil Symbol as depicted on the following page.

DRY DENSITY: Dry density of an undisturbed or relatively undisturbed sample in lbs/ft^3.

MOISTURE CONTENT: Moisture content of a soil sample, expressed as a percentage of the dry weight.

LIQUID LIMIT: The moisture content above which a soil behaves as a liquid.

PLASTIC LIMIT: The moisture content above which a soil behaves as a plastic.

PASSING #200 SIEVE: The percentage of the sample finer than the #200 standard sieve.

UNCONFINED SHEAR: The shear strength of a cohesive soil sample, as measured in the unconfined state.

SOIL CLASSIFICATION CHART

MAJOR DIVISIONS			SYMBOLS		TYPICAL DESCRIPTIONS
			GRAPH	LETTER	
COARSE GRAINED SOILS MORE THAN 50% OF MATERIAL IS LARGER THAN NO. 200 SIEVE SIZE	GRAVEL AND GRAVELLY SOILS MORE THAN 50% OF COARSE FRACTION RETAINED ON NO. 4 SIEVE	CLEAN GRAVELS (LITTLE OR NO FINES)		GW	WELL-GRADED GRAVELS, GRAVEL - SAND MIXTURES, LITTLE OR NO FINES
				GP	POORLY-GRADED GRAVELS, GRAVEL - SAND MIXTURES, LITTLE OR NO FINES
		GRAVELS WITH FINES (APPRECIABLE AMOUNT OF FINES)	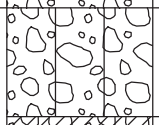	GM	SILTY GRAVELS, GRAVEL - SAND - SILT MIXTURES
			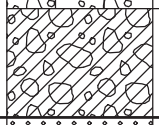	GC	CLAYEY GRAVELS, GRAVEL - SAND - CLAY MIXTURES
	SAND AND SANDY SOILS MORE THAN 50% OF COARSE FRACTION PASSING ON NO. 4 SIEVE	CLEAN SANDS (LITTLE OR NO FINES)	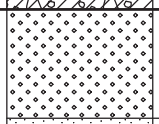	SW	WELL-GRADED SANDS, GRAVELLY SANDS, LITTLE OR NO FINES
			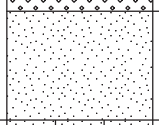	SP	POORLY-GRADED SANDS, GRAVELLY SAND, LITTLE OR NO FINES
		SANDS WITH FINES (APPRECIABLE AMOUNT OF FINES)	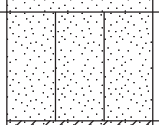	SM	SILTY SANDS, SAND - SILT MIXTURES
			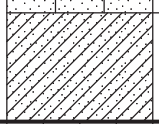	SC	CLAYEY SANDS, SAND - CLAY MIXTURES
FINE GRAINED SOILS MORE THAN 50% OF MATERIAL IS SMALLER THAN NO. 200 SIEVE SIZE	SILTS AND CLAYS	LIQUID LIMIT LESS THAN 50	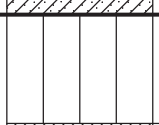	ML	INORGANIC SILTS AND VERY FINE SANDS, ROCK FLOUR, SILTY OR CLAYEY FINE SANDS OR CLAYEY SILTS WITH SLIGHT PLASTICITY
			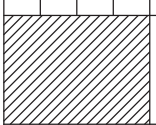	CL	INORGANIC CLAYS OF LOW TO MEDIUM PLASTICITY, GRAVELLY CLAYS, SANDY CLAYS, SILTY CLAYS, LEAN CLAYS
			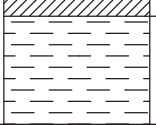	OL	ORGANIC SILTS AND ORGANIC SILTY CLAYS OF LOW PLASTICITY
	SILTS AND CLAYS	LIQUID LIMIT GREATER THAN 50	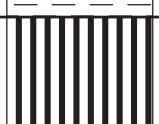	MH	INORGANIC SILTS, MICACEOUS OR DIATOMACEOUS FINE SAND OR SILTY SOILS
				CH	INORGANIC CLAYS OF HIGH PLASTICITY
				OH	ORGANIC CLAYS OF MEDIUM TO HIGH PLASTICITY, ORGANIC SILTS
HIGHLY ORGANIC SOILS			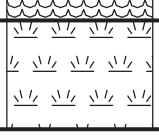	PT	PEAT, HUMUS, SWAMP SOILS WITH HIGH ORGANIC CONTENTS

NOTE: DUAL SYMBOLS ARE USED TO INDICATE BORDERLINE SOIL CLASSIFICATIONS

SOUTHERN CALIFORNIA GEOTECHNICAL
A California Corporation

BORING NO. B-1

JOB NO.: 21G242-1
PROJECT: Community Aquatic & Senior Center
LOCATION: Gardena, California

DRILLING DATE: 10/20/21
DRILLING METHOD: Hollow Stem Auger
LOGGED BY: Oscar Sandoval

WATER DEPTH: Dry
CAVE DEPTH: 10½ feet
READING TAKEN: At Completion

FIELD RESULTS						LABORATORY RESULTS						
DEPTH (FEET)	SAMPLE	BLOW COUNT	POCKET PEN. (TSF)	GRAPHIC LOG	DESCRIPTION SURFACE ELEVATION: MSL	DRY DENSITY (PCF)	MOISTURE CONTENT (%)	LIQUID LIMIT	PLASTIC LIMIT	PASSING #200 SIEVE (%)	ORGANIC CONTENT (%)	COMMENTS
					3± inches Portland Cement Concrete; No Steel Reinforcement							
		10			FILL: Dark Brown SIlty fine Sand, little Clay, trace fine Sand, loose-moist	118	13					
		22	4.5		FILL: Brown Silty Clay, very stiff-very moist	112	17					
5		24	4.5		@ 5 feet, little fine Sand	116	17					
		21			ALLUVIUM: Light Brown to Brown Clayey fine Sand, medium dense-moist	111	13					
		12			Light Gray Brown fine to medium Sand, trace to little Clay, trace Iron Oxide staining, loose-damp to moist	108	8					
10												
					Dark Brown Silty Clay, little fine Sand, trace Iron Oxide staining, very stiff-moist							
		13	4.5				14					
15												
					Gray Brown fine Sandy Silt, trace Iron Oxide staining, medium dense-moist							
		18					10					
20												
					Boring Terminated at 20'							

TBL 21G242-1.GPJ SOCALGEO.GDT 11/19/21

TEST BORING LOG

PLATE B-1

SOUTHERN CALIFORNIA GEOTECHNICAL
A California Corporation

BORING NO. B-2

JOB NO.: 21G242-1 | DRILLING DATE: 10/20/21 | WATER DEPTH: Dry
PROJECT: Community Aquatic & Senior Center | DRILLING METHOD: Hollow Stem Auger | CAVE DEPTH: 9 feet
LOCATION: Gardena, California | LOGGED BY: Oscar Sandoval | READING TAKEN: At Completion

FIELD RESULTS						LABORATORY RESULTS						
DEPTH (FEET)	SAMPLE	BLOW COUNT	POCKET PEN. (TSF)	GRAPHIC LOG	DESCRIPTION SURFACE ELEVATION: MSL	DRY DENSITY (PCF)	MOISTURE CONTENT (%)	LIQUID LIMIT	PLASTIC LIMIT	PASSING #200 SIEVE (%)	ORGANIC CONTENT (%)	COMMENTS
					3½± inches Portland Cement Concrete; No Steel Reinforcement							
		23			FILL: Light Gray Brown to Gray Brown Silty fine Sand, little Clay, trace medium Sand, trace fine Root Fibers, slightly porous, medium dense-damp	94	5					
		20	4.5		FILL: Light Brown to Brown Silty Clay, trace fine Sand, trace fine Root Fibers, stiff to very stiff-damp to moist	125	7					
5		42	4.5			116	13					
		48			ALLUVIUM: Light Brown Clayey fine Sand, dense-moist	124	9					
		21			Light Brown fine to medium Sand, trace to little Clay, medium dense-damp	99	4					
10												
					Light Gray Brown Clayey fine Sand, dense-moist							
		35					8					
15												
					Light Gray Brown SIlty fine Sand, little Clay, medium dense-moist							
		14					11					
20					Boring Terminated at 20'							

TBL 21G242-1.GPJ SOCALGEO.GDT 11/19/21

TEST BORING LOG **PLATE B-2**

SOUTHERN CALIFORNIA GEOTECHNICAL
A California Corporation

BORING NO. B-3

JOB NO.: 21G242-1
PROJECT: Community Aquatic & Senior Center
LOCATION: Gardena, California

DRILLING DATE: 10/20/21
DRILLING METHOD: Hollow Stem Auger
LOGGED BY: Oscar Sandoval

WATER DEPTH: Dry
CAVE DEPTH: 9½ feet
READING TAKEN: At Completion

FIELD RESULTS						LABORATORY RESULTS						
DEPTH (FEET)	SAMPLE	BLOW COUNT	POCKET PEN. (TSF)	GRAPHIC LOG	DESCRIPTION SURFACE ELEVATION: MSL	DRY DENSITY (PCF)	MOISTURE CONTENT (%)	LIQUID LIMIT	PLASTIC LIMIT	PASSING #200 SIEVE (%)	ORGANIC CONTENT (%)	COMMENTS
					5± inches Portland Cement Concrete with Welded Wire Reinforcement							
					FILL: Dark Brown Silty Clay, little fine Sand, trace glass fragments, mottled, stiff-very moist							Hand Auger 0 - 5'
			2.5				15					
5					ALLUVIUM: Brown to Dark Brown Silty Clay, trace fine Sand, very stiff-very moist							
		27	2.5				17					
					Dark Brown Clayey fine Sand, medium dense-moist							
		18					14					
10												
					Light Gray Brown Silty Clay to Clayey Silt, little fine Sand, stiff-very moist							
		11	2.5				16					
15												
					Light Gray Brown Clayey fine Sand, medium dense-moist							
		14					13					
20												
					Dark Gray Brown Silty fine Sand, loose to medium dense-wet							
		10			@ 23½ feet, Groundwater encountered during drilling		27					
25												
					Boring Terminated at 25'							

TBL 21G242-1.GPJ SOCALGEO.GDT 11/19/21

TEST BORING LOG

PLATE B-3

SOUTHERN CALIFORNIA GEOTECHNICAL
A California Corporation

BORING NO. B-4

JOB NO.: 21G242-1
PROJECT: Community Aquatic & Senior Center
LOCATION: Gardena, California

DRILLING DATE: 10/20/21
DRILLING METHOD: Hollow Stem Auger
LOGGED BY: Oscar Sandoval

WATER DEPTH: Dry
CAVE DEPTH: 13½ feet
READING TAKEN: At Completion

FIELD RESULTS						LABORATORY RESULTS						
DEPTH (FEET)	SAMPLE	BLOW COUNT	POCKET PEN. (TSF)	GRAPHIC LOG	DESCRIPTION SURFACE ELEVATION: MSL	DRY DENSITY (PCF)	MOISTURE CONTENT (%)	LIQUID LIMIT	PLASTIC LIMIT	PASSING #200 SIEVE (%)	ORGANIC CONTENT (%)	COMMENTS
					5± inches Portland Cement Concrete with Welded Wire Reinforcement							EI = 50 @ 0-5'
					FILL: Dark Brown Silty Clay to Clayey Silt, trace fine Sand, mottled, stiff-very moist							
5		12	3.0				16					
		15			ALLUVIUM: Brown fine to medium Sand, little Clay, stiff-moist		10					
10												
		17	4.5		Brown to Dark Brown fine Sandy Clay, trace Silt, very stiff-moist to very moist		16					
15												
		13			Brown Silty fine Sand, trace Clay, medium dense-moist		11					
20												
		15			Gray Brown fine Sandy Silt, little Clay, medium dense-wet @ 23½ feet, Groundwater encountered during drilling		22					
25					Boring Terminated at 25'							

TBL 21G242-1.GPJ SOCALGEO.GDT 11/19/21

TEST BORING LOG

PLATE B-4

APPENDIX C

Consolidation/Collapse Test Results

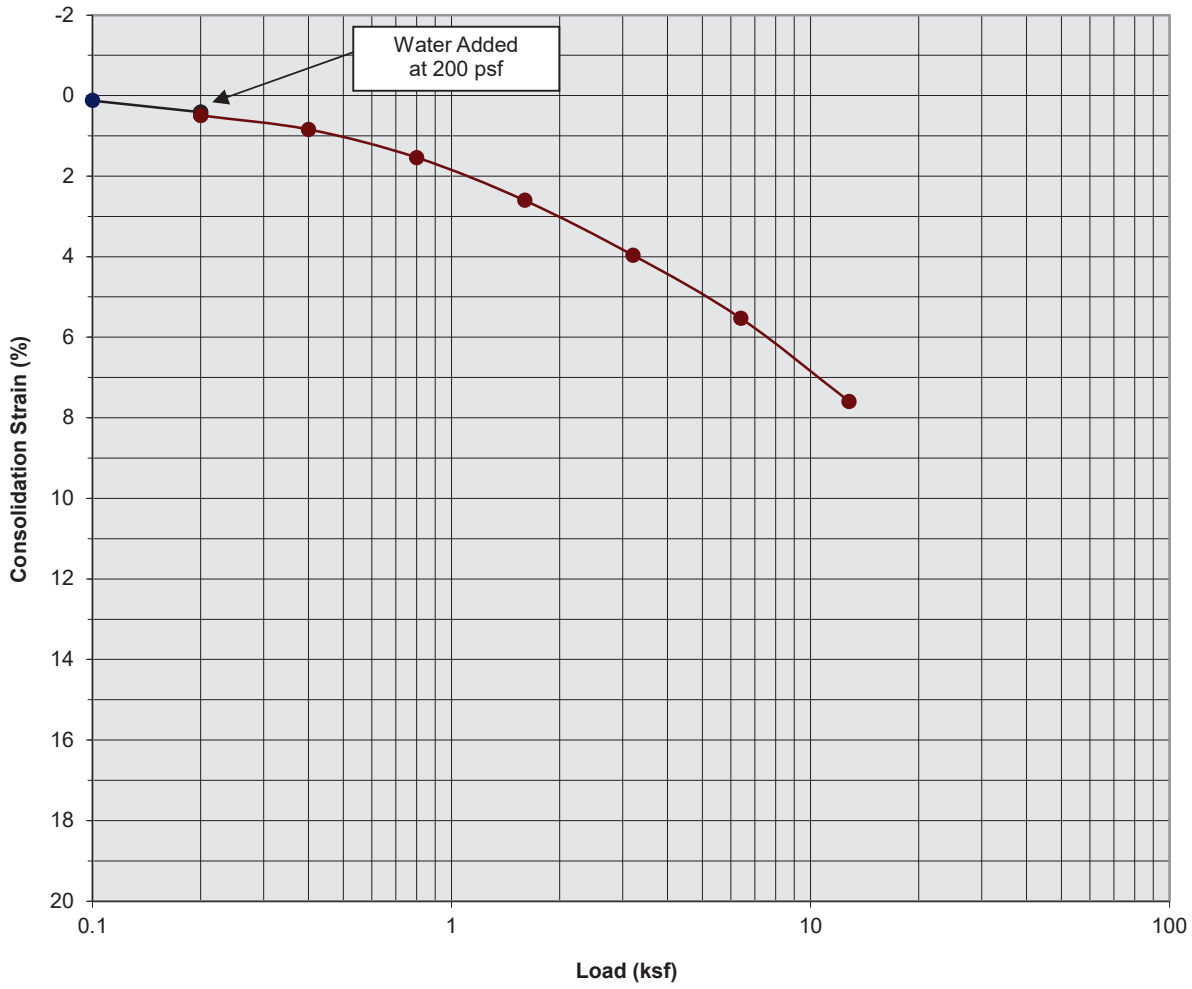

Classification: FILL: Brown Silty Clay

Boring Number:	B-1	Initial Moisture Content (%)	17
Sample Number:	---	Final Moisture Content (%)	18
Depth (ft)	3 to 4	Initial Dry Density (pcf)	112.0
Specimen Diameter (in)	2.4	Final Dry Density (pcf)	121.0
Specimen Thickness (in)	1.0	Percent Collapse (%)	0.08

Proposed Community Aquatic and Senior Center
Gardena, CA
Project No. 21G242-1

PLATE C- 1

SoCalGeo
SOUTHERN CALIFORNIA GEOTECHNICAL
A California Corporation

Consolidation/Collapse Test Results

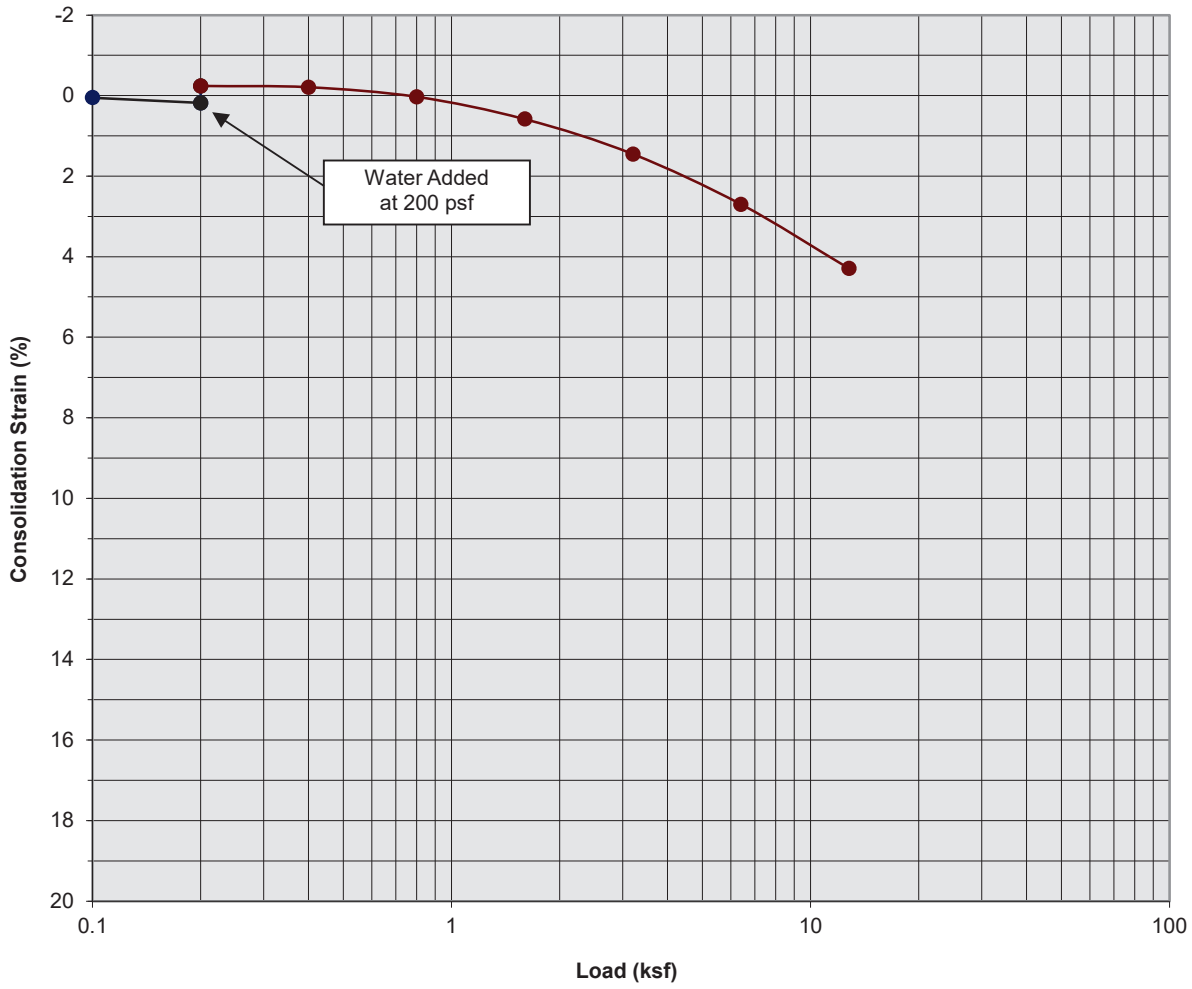

Classification: FILL: Brown Silty Clay, little fine Sand

Boring Number:	B-1	Initial Moisture Content (%)	17
Sample Number:	---	Final Moisture Content (%)	18
Depth (ft)	5 to 6	Initial Dry Density (pcf)	116.0
Specimen Diameter (in)	2.4	Final Dry Density (pcf)	121.0
Specimen Thickness (in)	1.0	Percent Collapse (%)	-0.42

Proposed Community Aquatic and Senior Center
Gardena, CA
Project No. 21G242-1

PLATE C- 2

SoCalGeo
SOUTHERN CALIFORNIA GEOTECHNICAL
A California Corporation

Consolidation/Collapse Test Results

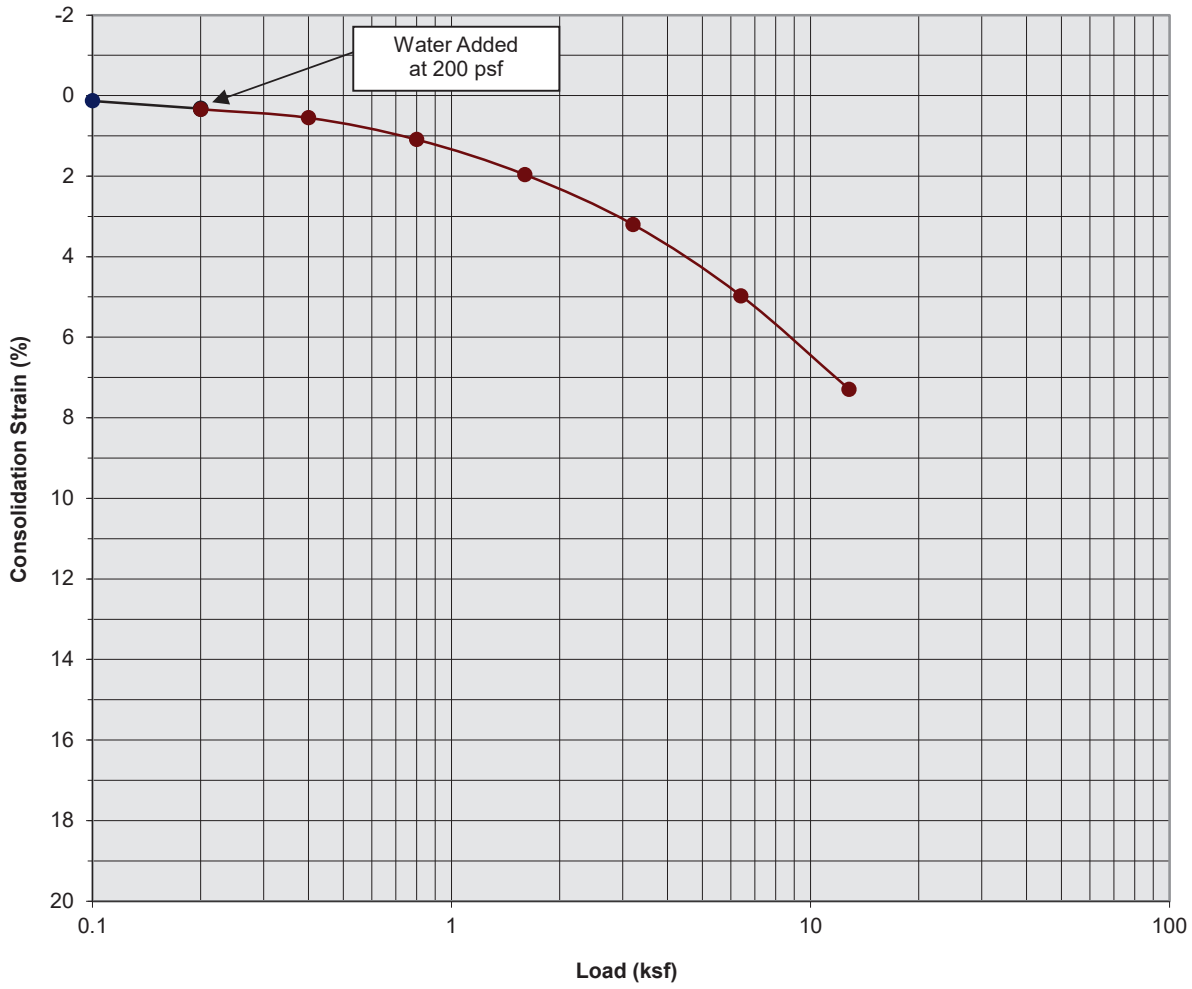

Classification: Light Brown to Brown Clayey fine Sand

Boring Number:	B-1	Initial Moisture Content (%)	13
Sample Number:	---	Final Moisture Content (%)	14
Depth (ft)	7 to 8	Initial Dry Density (pcf)	111.0
Specimen Diameter (in)	2.4	Final Dry Density (pcf)	119.4
Specimen Thickness (in)	1.0	Percent Collapse (%)	0.02

Proposed Community Aquatic and Senior Center
Gardena, CA
Project No. 21G242-1

PLATE C- 3

SoCalGeo
SOUTHERN CALIFORNIA GEOTECHNICAL
A California Corporation

Consolidation/Collapse Test Results

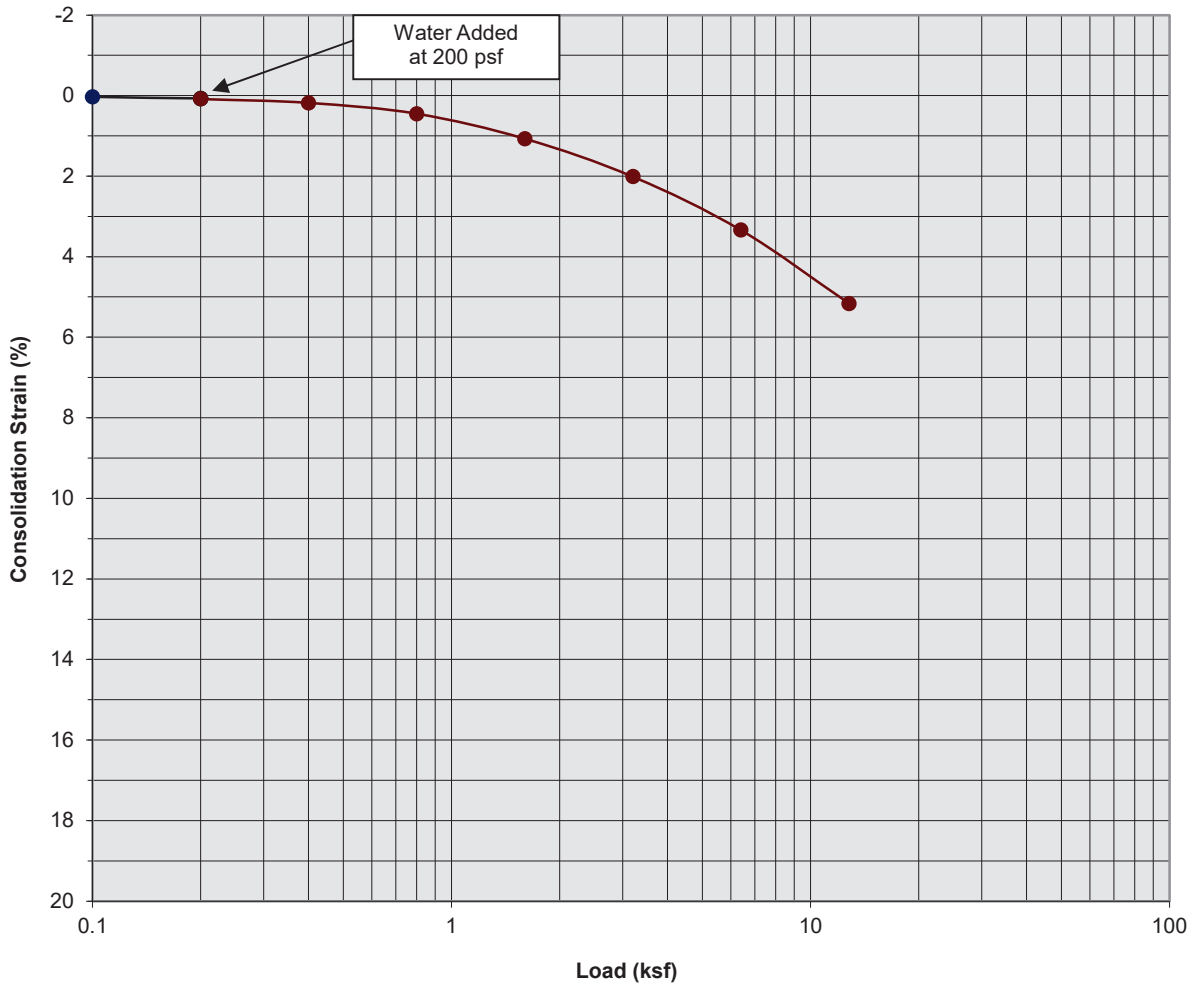

Classification: Light Gray Brown fine to medium Sand, trace to little Clay

Boring Number:	B-1	Initial Moisture Content (%)	8
Sample Number:	---	Final Moisture Content (%)	17
Depth (ft)	9 to 10	Initial Dry Density (pcf)	108.0
Specimen Diameter (in)	2.4	Final Dry Density (pcf)	113.0
Specimen Thickness (in)	1.0	Percent Collapse (%)	0.01

Proposed Community Aquatic and Senior Center
Gardena, CA
Project No. 21G242-1

PLATE C- 4

SoCalGeo
SOUTHERN CALIFORNIA GEOTECHNICAL
A California Corporation

Moisture/Density Relationship
ASTM D-1557

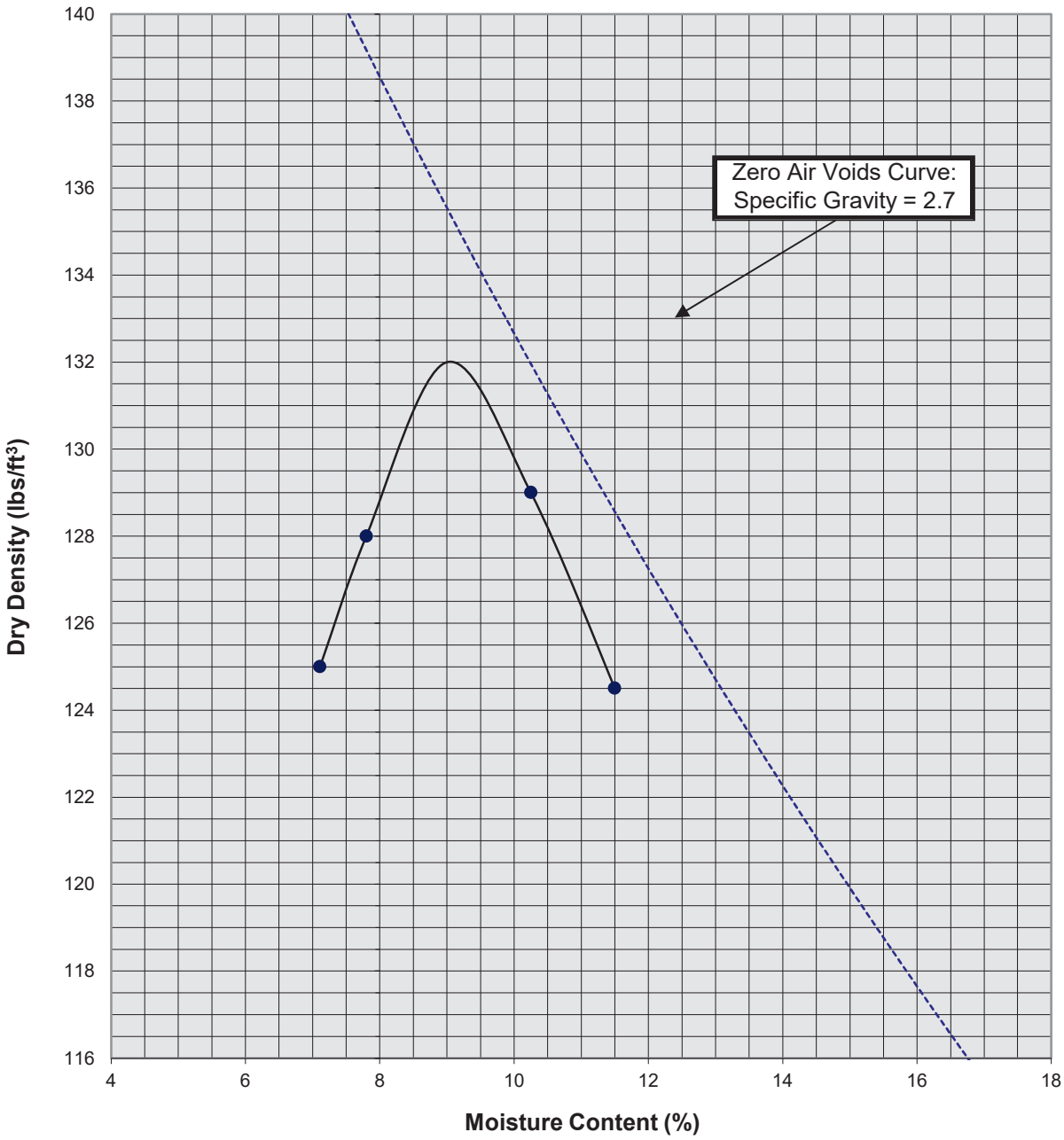

Soil ID Number	B-2 @ 0 to 5'
Optimum Moisture (%)	9
Maximum Dry Density (pcf)	132
Soil Classification	Light Gray Brown to Gray Brown Silty fine Sand, little Clay, trace medium Sand

Proposed Community Aquatic and Senior Center
Gardena, CA
Project No. 21G242-1

PLATE C-5

SoCalGeo
SOUTHERN CALIFORNIA GEOTECHNICAL
A California Corporation

Direct Shear Test Results
(Undisturbed)

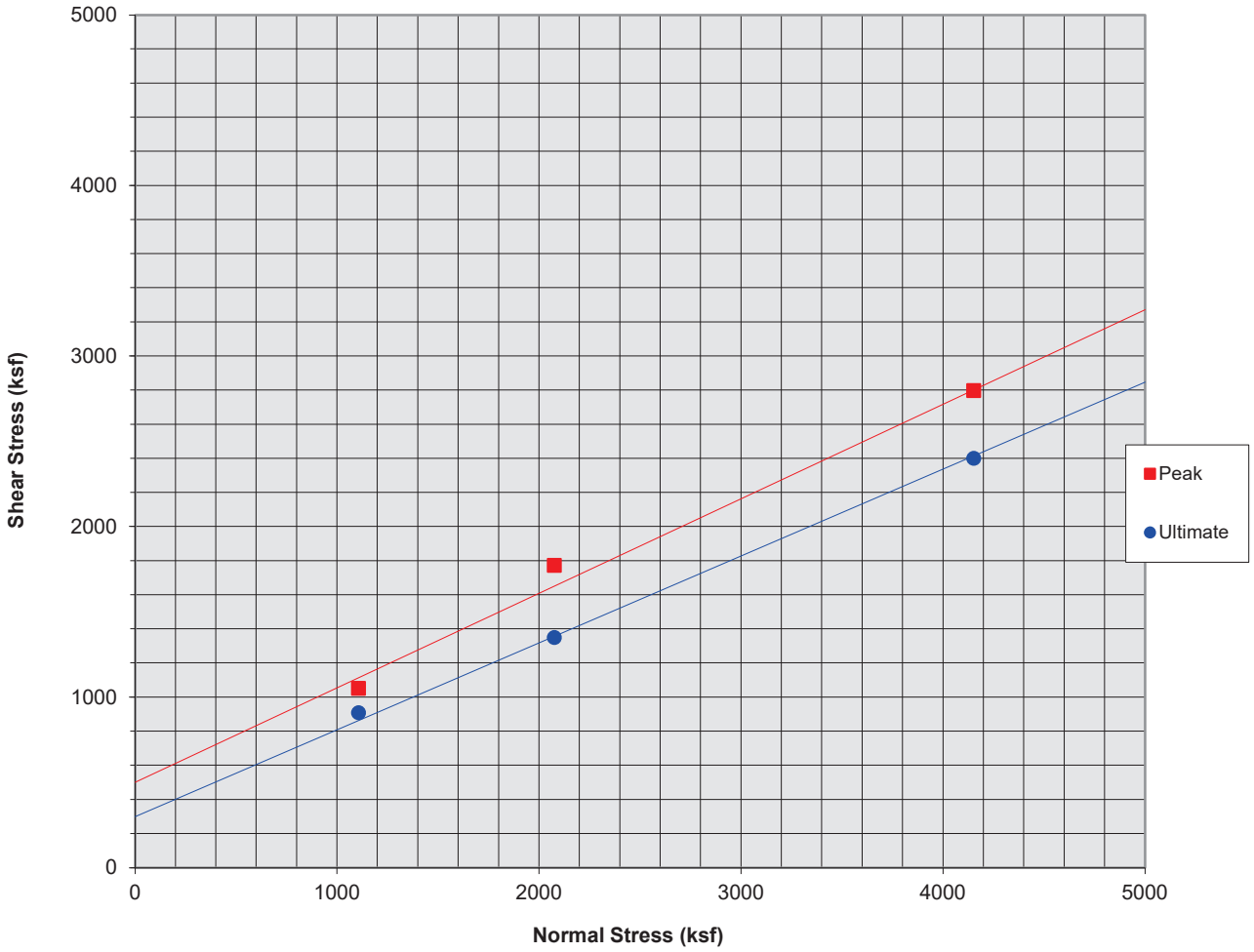

Sample Description: B-2 @ 3 to 4 feet

Classification: Light Brown to Brown Silty Clay

Sample Data	
Initial Moisture Content	7.0
Final Moisture Content	15.0
Initial Dry Density	125.0
Final Dry Density	--
Specimen Diameter (in)	2.4
Specimen Thickness (in)	1.0

Test Results	Peak	Ultimate
ϕ (°)	29.0	27.0
C (psf)	500	300

Proposed Community Aquatic and Senior Center
Gardena, CA
Project No. 21G242-1

PLATE C- 6

SoCalGeo
SOUTHERN CALIFORNIA GEOTECHNICAL
A California Corporation

APPENDIX D

GRADING GUIDE SPECIFICATIONS

These grading guide specifications are intended to provide typical procedures for grading operations. They are intended to supplement the recommendations contained in the geotechnical investigation report for this project. Should the recommendations in the geotechnical investigation report conflict with the grading guide specifications, the more site specific recommendations in the geotechnical investigation report will govern.

General

- The Earthwork Contractor is responsible for the satisfactory completion of all earthwork in accordance with the plans and geotechnical reports, and in accordance with city, county, and applicable building codes.

- The Geotechnical Engineer is the representative of the Owner/Builder for the purpose of implementing the report recommendations and guidelines. These duties are not intended to relieve the Earthwork Contractor of any responsibility to perform in a workman-like manner, nor is the Geotechnical Engineer to direct the grading equipment or personnel employed by the Contractor.

- The Earthwork Contractor is required to notify the Geotechnical Engineer of the anticipated work and schedule so that testing and inspections can be provided. If necessary, work may be stopped and redone if personnel have not been scheduled in advance.

- The Earthwork Contractor is required to have suitable and sufficient equipment on the job-site to process, moisture condition, mix and compact the amount of fill being placed to the approved compaction. In addition, suitable support equipment should be available to conform with recommendations and guidelines in this report.

- Canyon cleanouts, overexcavation areas, processed ground to receive fill, key excavations, subdrains and benches should be observed by the Geotechnical Engineer prior to placement of any fill. It is the Earthwork Contractor's responsibility to notify the Geotechnical Engineer of areas that are ready for inspection.

- Excavation, filling, and subgrade preparation should be performed in a manner and sequence that will provide drainage at all times and proper control of erosion. Precipitation, springs, and seepage water encountered shall be pumped or drained to provide a suitable working surface. The Geotechnical Engineer must be informed of springs or water seepage encountered during grading or foundation construction for possible revision to the recommended construction procedures and/or installation of subdrains.

Site Preparation

- The Earthwork Contractor is responsible for all clearing, grubbing, stripping and site preparation for the project in accordance with the recommendations of the Geotechnical Engineer.

- If any materials or areas are encountered by the Earthwork Contractor which are suspected of having toxic or environmentally sensitive contamination, the Geotechnical Engineer and Owner/Builder should be notified immediately.

- Major vegetation should be stripped and disposed of off-site. This includes trees, brush, heavy grasses and any materials considered unsuitable by the Geotechnical Engineer.

- Underground structures such as basements, cesspools or septic disposal systems, mining shafts, tunnels, wells and pipelines should be removed under the inspection of the Geotechnical Engineer and recommendations provided by the Geotechnical Engineer and/or city, county or state agencies. If such structures are known or found, the Geotechnical Engineer should be notified as soon as possible so that recommendations can be formulated.

- Any topsoil, slopewash, colluvium, alluvium and rock materials which are considered unsuitable by the Geotechnical Engineer should be removed prior to fill placement.

- Remaining voids created during site clearing caused by removal of trees, foundations basements, irrigation facilities, etc., should be excavated and filled with compacted fill.

- Subsequent to clearing and removals, areas to receive fill should be scarified to a depth of 10 to 12 inches, moisture conditioned and compacted

- The moisture condition of the processed ground should be at or slightly above the optimum moisture content as determined by the Geotechnical Engineer. Depending upon field conditions, this may require air drying or watering together with mixing and/or discing.

Compacted Fills

- Soil materials imported to or excavated on the property may be utilized in the fill, provided each material has been determined to be suitable in the opinion of the Geotechnical Engineer. Unless otherwise approved by the Geotechnical Engineer, all fill materials shall be free of deleterious, organic, or frozen matter, shall contain no chemicals that may result in the material being classified as "contaminated," and shall be very low to non-expansive with a maximum expansion index (EI) of 50. The top 12 inches of the compacted fill should have a maximum particle size of 3 inches, and all underlying compacted fill material a maximum 6-inch particle size, except as noted below.

- All soils should be evaluated and tested by the Geotechnical Engineer. Materials with high expansion potential, low strength, poor gradation or containing organic materials may require removal from the site or selective placement and/or mixing to the satisfaction of the Geotechnical Engineer.

- Rock fragments or rocks less than 6 inches in their largest dimensions, or as otherwise determined by the Geotechnical Engineer, may be used in compacted fill, provided the distribution and placement is satisfactory in the opinion of the Geotechnical Engineer.

- Rock fragments or rocks greater than 12 inches should be taken off-site or placed in accordance with recommendations and in areas designated as suitable by the Geotechnical Engineer. These materials should be placed in accordance with Plate D-8 of these Grading Guide Specifications and in accordance with the following recommendations:

    - Rocks 12 inches or more in diameter should be placed in rows at least 15 feet apart, 15 feet from the edge of the fill, and 10 feet or more below subgrade. Spaces should be left between each rock fragment to provide for placement and compaction of soil around the fragments.

    - Fill materials consisting of soil meeting the minimum moisture content requirements and free of oversize material should be placed between and over the rows of rock or

concrete. Ample water and compactive effort should be applied to the fill materials as they are placed in order that all of the voids between each of the fragments are filled and compacted to the specified density.

- Subsequent rows of rocks should be placed such that they are not directly above a row placed in the previous lift of fill. A minimum 5-foot offset between rows is recommended.

- To facilitate future trenching, oversized material should not be placed within the range of foundation excavations, future utilities or other underground construction unless specifically approved by the soil engineer and the developer/owner representative.

- Fill materials approved by the Geotechnical Engineer should be placed in areas previously prepared to receive fill and in evenly placed, near horizontal layers at about 6 to 8 inches in loose thickness, or as otherwise determined by the Geotechnical Engineer for the project.

- Each layer should be moisture conditioned to optimum moisture content, or slightly above, as directed by the Geotechnical Engineer. After proper mixing and/or drying, to evenly distribute the moisture, the layers should be compacted to at least 90 percent of the maximum dry density in compliance with ASTM D-1557-78 unless otherwise indicated.

- Density and moisture content testing should be performed by the Geotechnical Engineer at random intervals and locations as determined by the Geotechnical Engineer. These tests are intended as an aid to the Earthwork Contractor, so he can evaluate his workmanship, equipment effectiveness and site conditions. The Earthwork Contractor is responsible for compaction as required by the Geotechnical Report(s) and governmental agencies.

- Fill areas unused for a period of time may require moisture conditioning, processing and recompaction prior to the start of additional filling. The Earthwork Contractor should notify the Geotechnical Engineer of his intent so that an evaluation can be made.

- Fill placed on ground sloping at a 5-to-1 inclination (horizontal-to-vertical) or steeper should be benched into bedrock or other suitable materials, as directed by the Geotechnical Engineer. Typical details of benching are illustrated on Plates D-2, D-4, and D-5.

- Cut/fill transition lots should have the cut portion overexcavated to a depth of at least 3 feet and rebuilt with fill (see Plate D-1), as determined by the Geotechnical Engineer.

- All cut lots should be inspected by the Geotechnical Engineer for fracturing and other bedrock conditions. If necessary, the pads should be overexcavated to a depth of 3 feet and rebuilt with a uniform, more cohesive soil type to impede moisture penetration.

- Cut portions of pad areas above buttresses or stabilizations should be overexcavated to a depth of 3 feet and rebuilt with uniform, more cohesive compacted fill to impede moisture penetration.

- Non-structural fill adjacent to structural fill should typically be placed in unison to provide lateral support. Backfill along walls must be placed and compacted with care to ensure that excessive unbalanced lateral pressures do not develop. The type of fill material placed adjacent to below grade walls must be properly tested and approved by the Geotechnical Engineer with consideration of the lateral earth pressure used in the design.

Foundations

- The foundation influence zone is defined as extending one foot horizontally from the outside edge of a footing, and proceeding downward at a ½ horizontal to 1 vertical (0.5:1) inclination.

- Where overexcavation beneath a footing subgrade is necessary, it should be conducted so as to encompass the entire foundation influence zone, as described above.

- Compacted fill adjacent to exterior footings should extend at least 12 inches above foundation bearing grade. Compacted fill within the interior of structures should extend to the floor subgrade elevation.

Fill Slopes

- The placement and compaction of fill described above applies to all fill slopes. Slope compaction should be accomplished by overfilling the slope, adequately compacting the fill in even layers, including the overfilled zone and cutting the slope back to expose the compacted core

- Slope compaction may also be achieved by backrolling the slope adequately every 2 to 4 vertical feet during the filling process as well as requiring the earth moving and compaction equipment to work close to the top of the slope. Upon completion of slope construction, the slope face should be compacted with a sheepsfoot connected to a sideboom and then grid rolled. This method of slope compaction should only be used if approved by the Geotechnical Engineer.

- Sandy soils lacking in adequate cohesion may be unstable for a finished slope condition and therefore should not be placed within 15 horizontal feet of the slope face.

- All fill slopes should be keyed into bedrock or other suitable material. Fill keys should be at least 15 feet wide and inclined at 2 percent into the slope. For slopes higher than 30 feet, the fill key width should be equal to one-half the height of the slope (see Plate D-5).

- All fill keys should be cleared of loose slough material prior to geotechnical inspection and should be approved by the Geotechnical Engineer and governmental agencies prior to filling.

- The cut portion of fill over cut slopes should be made first and inspected by the Geotechnical Engineer for possible stabilization requirements. The fill portion should be adequately keyed through all surficial soils and into bedrock or suitable material. Soils should be removed from the transition zone between the cut and fill portions (see Plate D-2).

Cut Slopes

- All cut slopes should be inspected by the Geotechnical Engineer to determine the need for stabilization. The Earthwork Contractor should notify the Geotechnical Engineer when slope cutting is in progress at intervals of 10 vertical feet. Failure to notify may result in a delay in recommendations.

- Cut slopes exposing loose, cohesionless sands should be reported to the Geotechnical Engineer for possible stabilization recommendations.

- All stabilization excavations should be cleared of loose slough material prior to geotechnical inspection. Stakes should be provided by the Civil Engineer to verify the location and dimensions of the key. A typical stabilization fill detail is shown on Plate D-5.

- Stabilization key excavations should be provided with subdrains. Typical subdrain details are shown on Plates D-6.

Subdrains

- Subdrains may be required in canyons and swales where fill placement is proposed. Typical subdrain details for canyons are shown on Plate D-3. Subdrains should be installed after approval of removals and before filling, as determined by the Soils Engineer.

- Plastic pipe may be used for subdrains provided it is Schedule 40 or SDR 35 or equivalent. Pipe should be protected against breakage, typically by placement in a square-cut (backhoe) trench or as recommended by the manufacturer.

- Filter material for subdrains should conform to CALTRANS Specification 68-1.025 or as approved by the Geotechnical Engineer for the specific site conditions. Clean ¾-inch crushed rock may be used provided it is wrapped in an acceptable filter cloth and approved by the Geotechnical Engineer. Pipe diameters should be 6 inches for runs up to 500 feet and 8 inches for the downstream continuations of longer runs. Four-inch diameter pipe may be used in buttress and stabilization fills.

CUT LOT

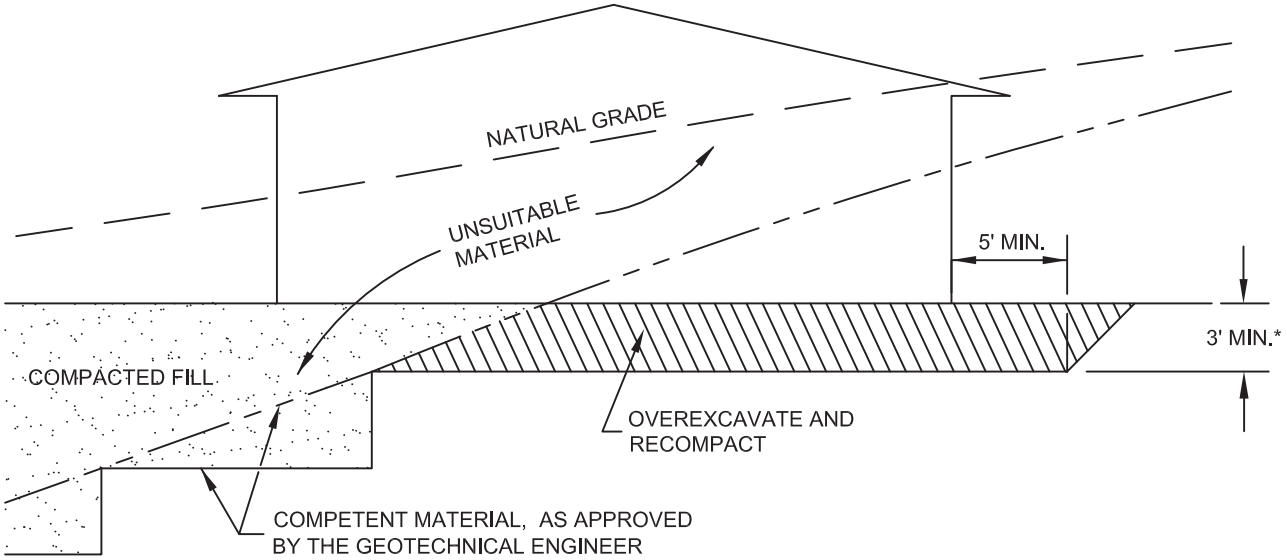

CUT/FILL LOT (TRANSITION)

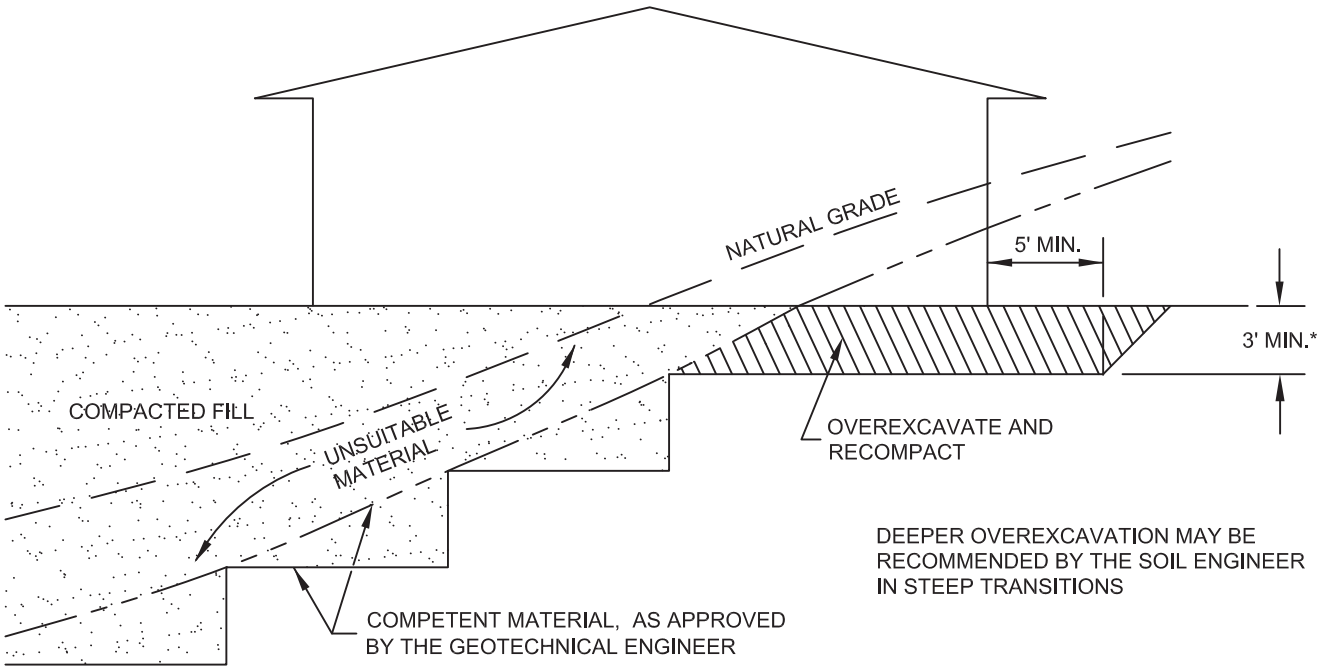

*SEE TEXT OF REPORT FOR SPECIFIC RECOMMENDATION. ACTUAL DEPTH OF OVEREXCAVATION MAY BE GREATER.

TRANSITION LOT DETAIL

GRADING GUIDE SPECIFICATIONS

NOT TO SCALE

DRAWN: JAS
CHKD: GKM

PLATE D-1

SoCalGeo

SOUTHERN CALIFORNIA GEOTECHNICAL

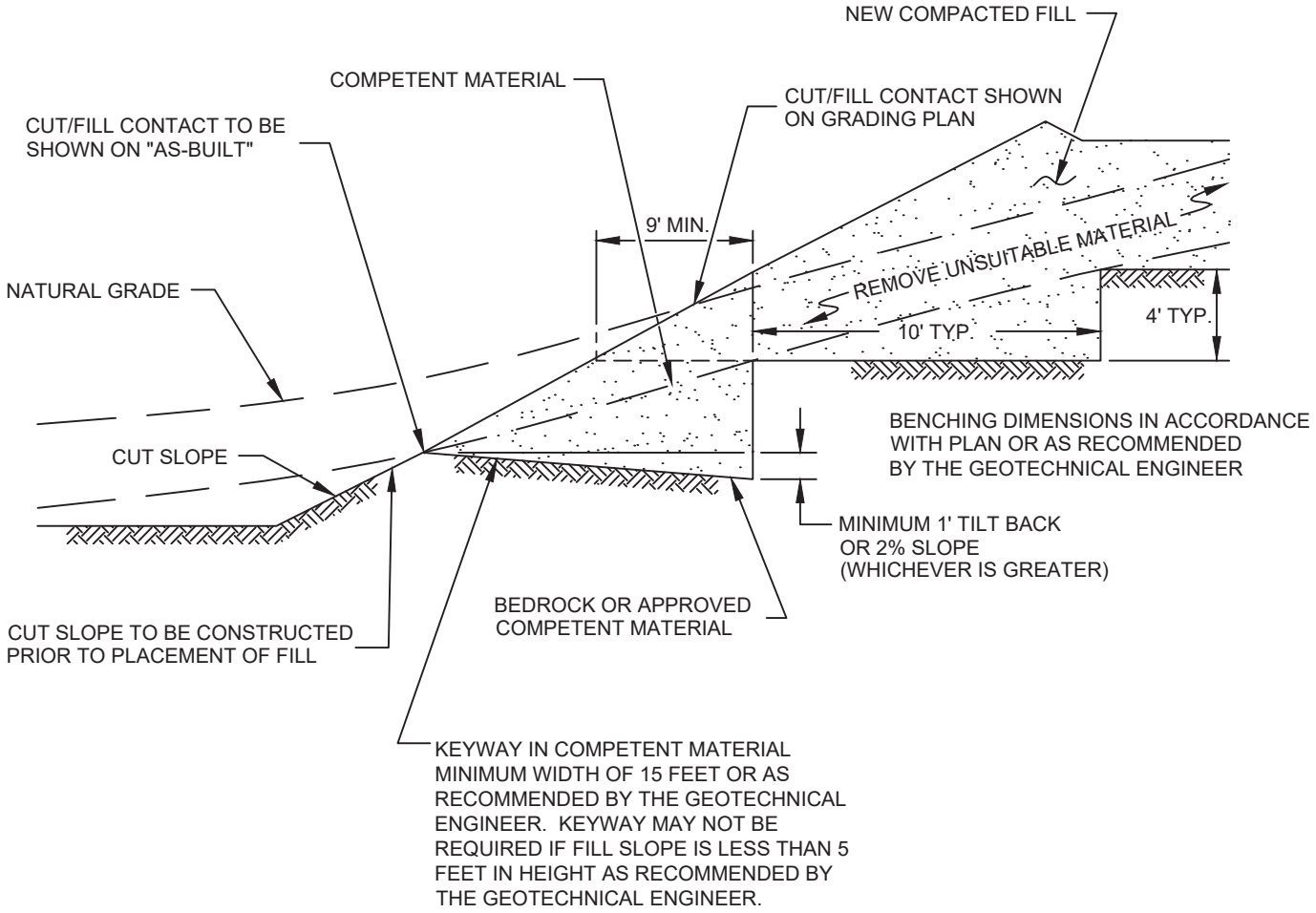

FILL ABOVE CUT SLOPE DETAIL

GRADING GUIDE SPECIFICATIONS

NOT TO SCALE

DRAWN: JAS
CHKD: GKM

PLATE D-2

SoCalGeo

SOUTHERN CALIFORNIA GEOTECHNICAL

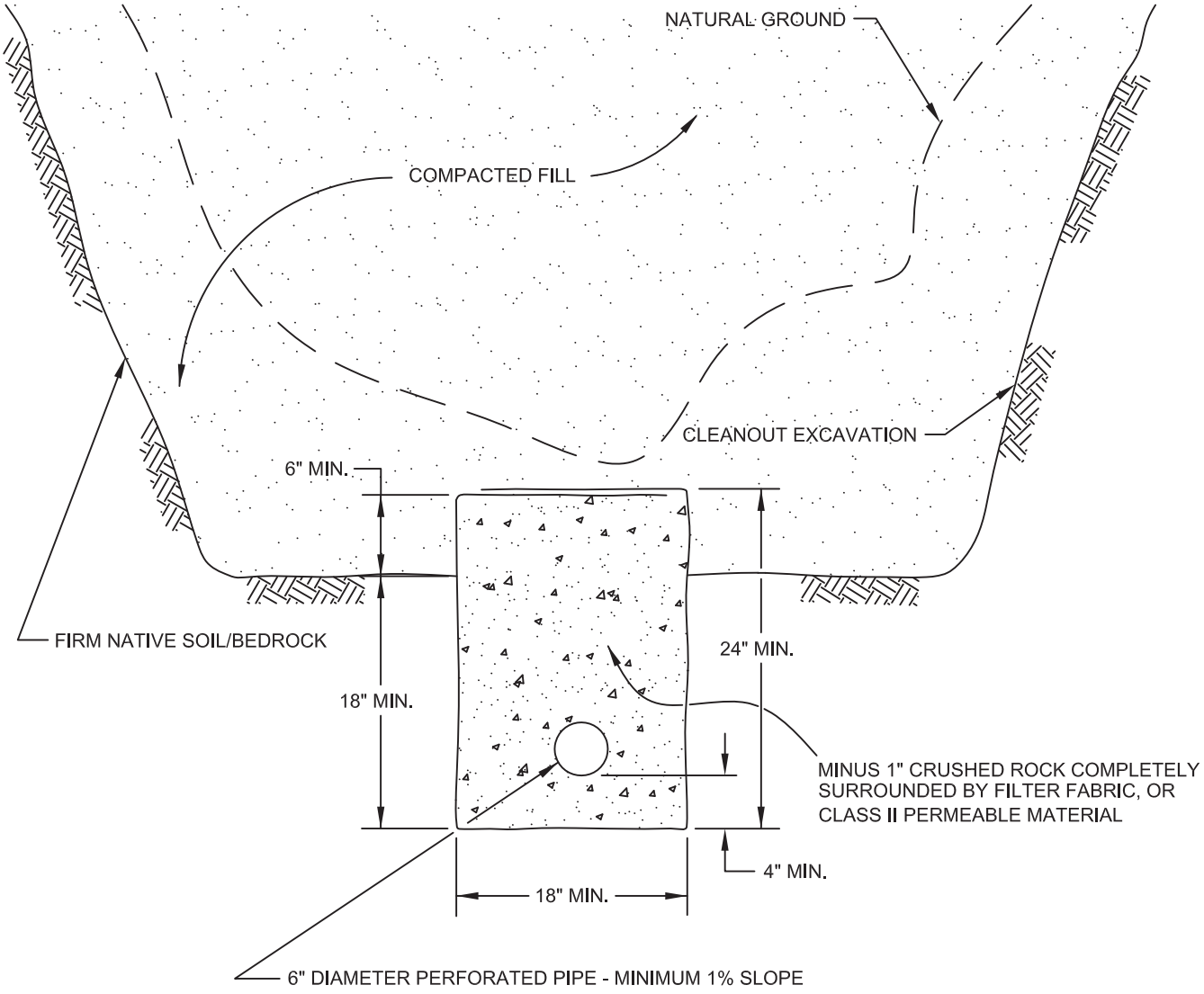

PIPE MATERIAL	DEPTH OF FILL OVER SUBDRAIN
ADS (CORRUGATED POLETHYLENE)	8
TRANSITE UNDERDRAIN	20
PVC OR ABS: SDR 35	35
SDR 21	100

SCHEMATIC ONLY
NOT TO SCALE

CANYON SUBDRAIN DETAIL
GRADING GUIDE SPECIFICATIONS

NOT TO SCALE
DRAWN: JAS
CHKD: GKM

PLATE D-3

SoCalGeo
SOUTHERN CALIFORNIA GEOTECHNICAL

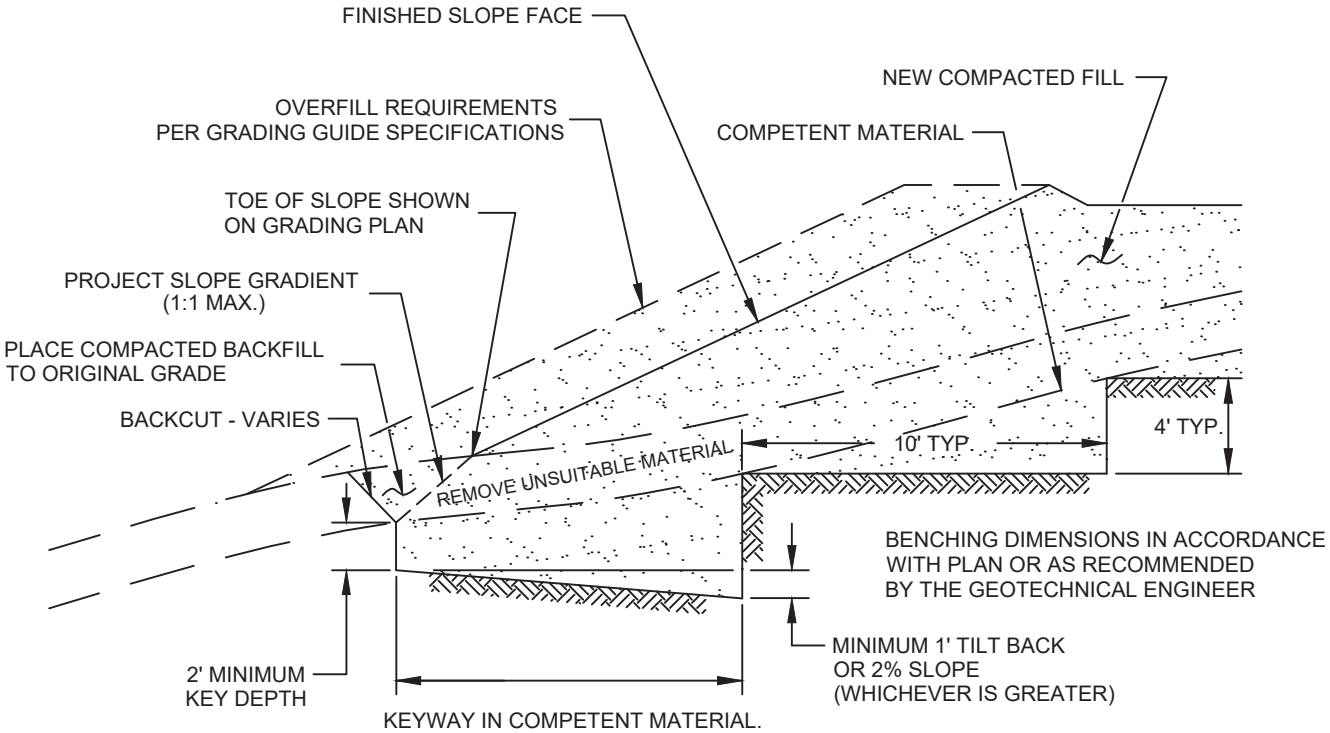

NOTE:
BENCHING SHALL BE REQUIRED WHEN NATURAL SLOPES ARE EQUAL TO OR STEEPER THAN 5:1 OR WHEN RECOMMENDED BY THE GEOTECHNICAL ENGINEER.

FILL ABOVE NATURAL SLOPE DETAIL

GRADING GUIDE SPECIFICATIONS

NOT TO SCALE

DRAWN: JAS
CHKD: GKM

PLATE D-4

SoCalGeo
SOUTHERN CALIFORNIA GEOTECHNICAL

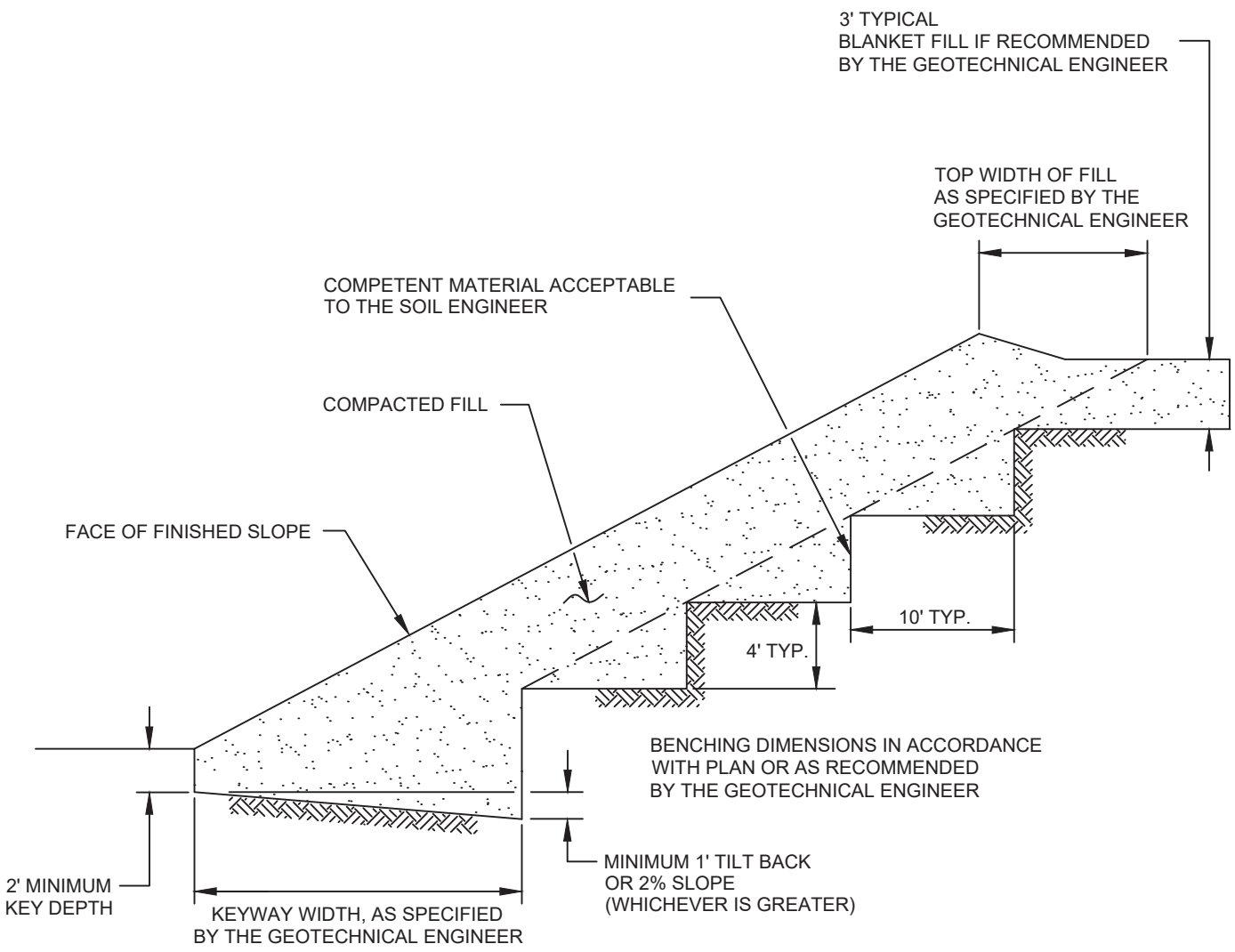

STABILIZATION FILL DETAIL

GRADING GUIDE SPECIFICATIONS

NOT TO SCALE

DRAWN: JAS
CHKD: GKM

PLATE D-5

SoCalGeo

SOUTHERN CALIFORNIA GEOTECHNICAL

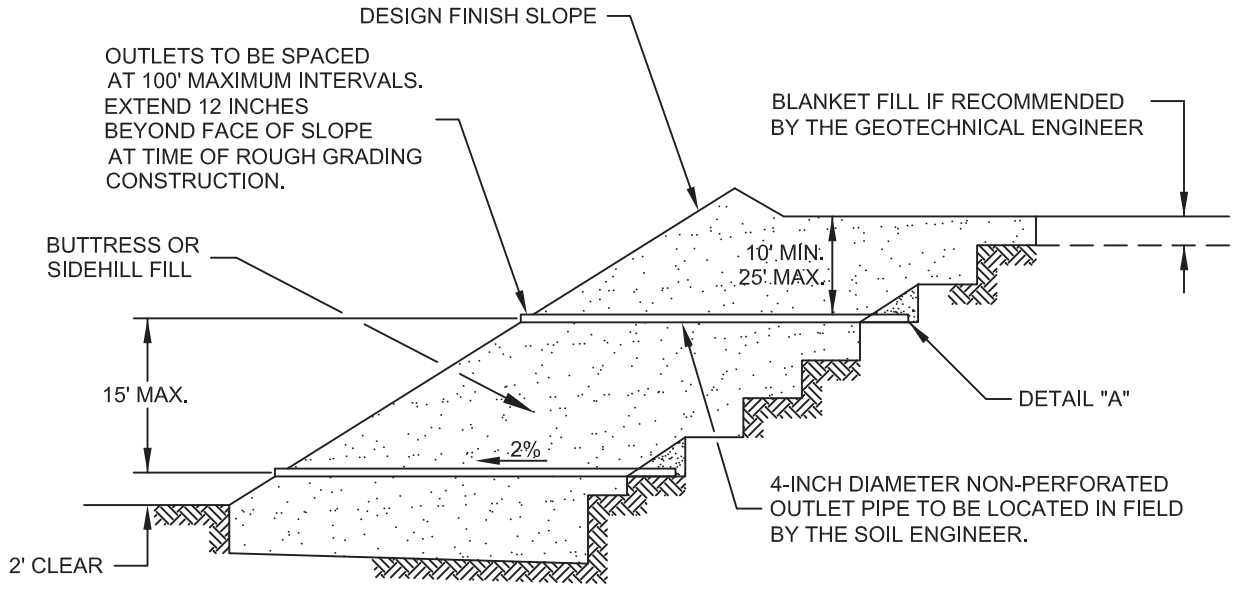

"FILTER MATERIAL" TO MEET FOLLOWING SPECIFICATION OR APPROVED EQUIVALENT: (CONFORMS TO EMA STD. PLAN 323)

SIEVE SIZE	PERCENTAGE PASSING
1"	100
3/4"	90-100
3/8"	40-100
NO. 4	25-40
NO. 8	18-33
NO. 30	5-15
NO. 50	0-7
NO. 200	0-3

"GRAVEL" TO MEET FOLLOWING SPECIFICATION OR APPROVED EQUIVALENT:

SIEVE SIZE	MAXIMUM PERCENTAGE PASSING
1 1/2"	100
NO. 4	50
NO. 200	8

SAND EQUIVALENT = MINIMUM OF 50

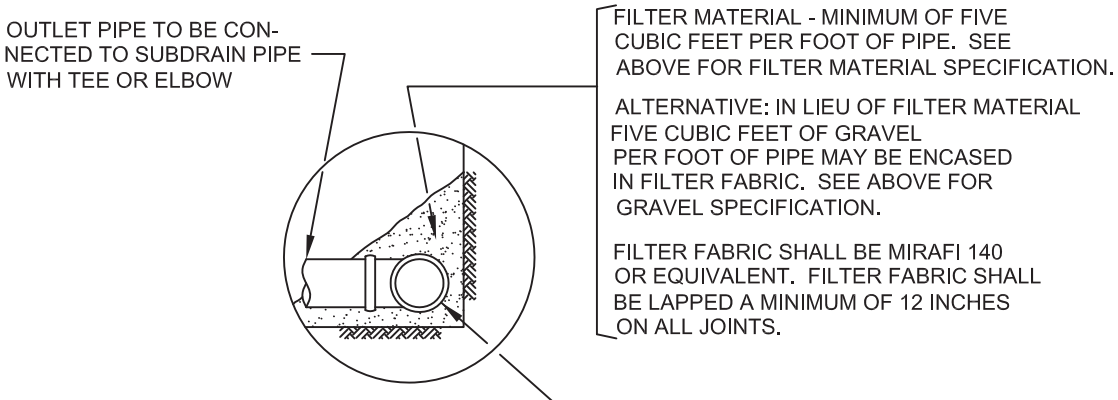

DETAIL "A"

NOTES:
1. TRENCH FOR OUTLET PIPES TO BE BACKFILLED WITH ON-SITE SOIL.

SLOPE FILL SUBDRAINS

GRADING GUIDE SPECIFICATIONS

NOT TO SCALE

DRAWN: JAS
CHKD: GKM

PLATE D-6

SoCalGeo
SOUTHERN CALIFORNIA GEOTECHNICAL

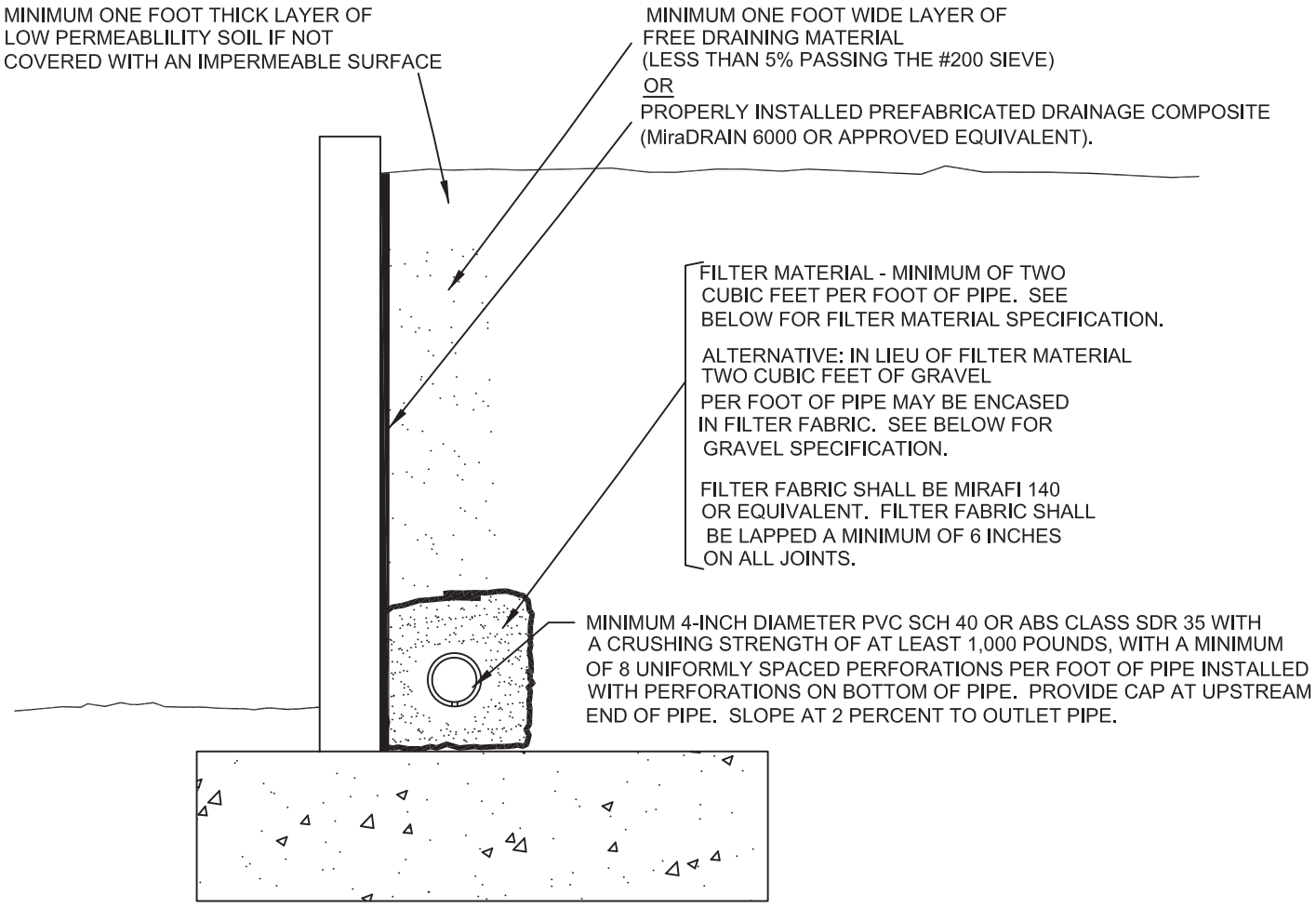

"FILTER MATERIAL" TO MEET FOLLOWING SPECIFICATION OR APPROVED EQUIVALENT: (CONFORMS TO EMA STD. PLAN 323)

SIEVE SIZE	PERCENTAGE PASSING
1"	100
3/4"	90-100
3/8"	40-100
NO. 4	25-40
NO. 8	18-33
NO. 30	5-15
NO. 50	0-7
NO. 200	0-3

"GRAVEL" TO MEET FOLLOWING SPECIFICATION OR APPROVED EQUIVALENT:

SIEVE SIZE	MAXIMUM PERCENTAGE PASSING
1 1/2"	100
NO. 4	50
NO. 200	8

SAND EQUIVALENT = MINIMUM OF 50

RETAINING WALL BACKDRAINS

GRADING GUIDE SPECIFICATIONS

NOT TO SCALE

DRAWN: JAS
CHKD: GKM

PLATE D-7

SoCalGeo

SOUTHERN CALIFORNIA GEOTECHNICAL

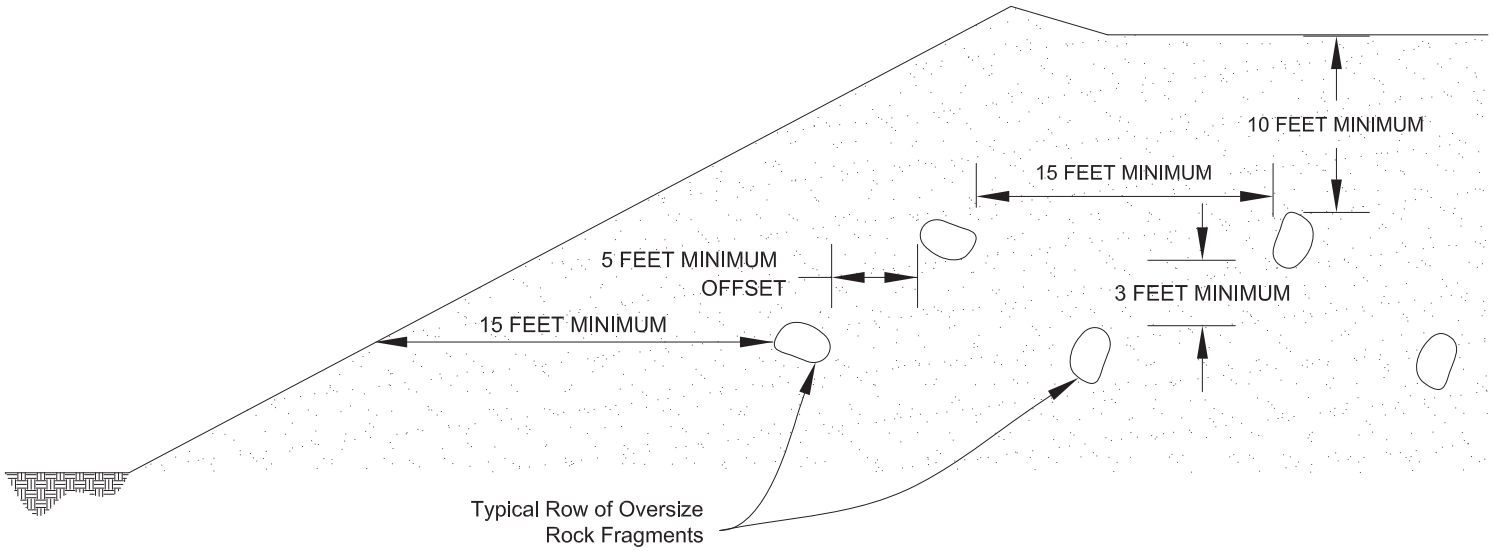

Section View

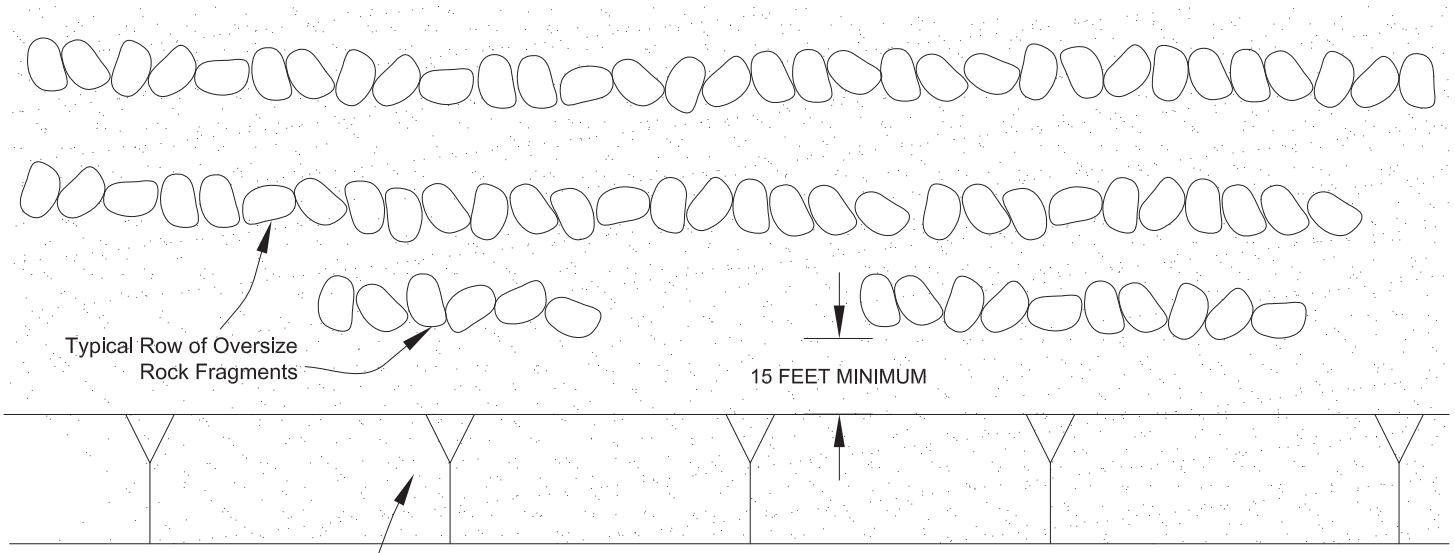

Plan View

PLACEMENT OF OVERSIZED MATERIAL

GRADING GUIDE SPECIFICATIONS

NOT TO SCALE

DRAWN: PM
CHKD: GKM

PLATE D-8

SoCalGeo

SOUTHERN CALIFORNIA GEOTECHNICAL

APPENDIX E

OSHPD

Latitude, Longitude: 33.885466, -118.306446



Date	11/4/2021, 1:31:13 PM
Design Code Reference Document	ASCE7-16
Risk Category	III
Site Class	D - Stiff Soil

Type	Value	Description
S_S	1.795	MCE_R ground motion. (for 0.2 second period)
S_1	0.636	MCE_R ground motion. (for 1.0s period)
S_{MS}	1.795	Site-modified spectral acceleration value
S_{M1}	null -See Section 11.4.8	Site-modified spectral acceleration value
S_{DS}	1.196	Numeric seismic design value at 0.2 second SA
S_{D1}	null -See Section 11.4.8	Numeric seismic design value at 1.0 second SA

Type	Value	Description
SDC	null -See Section 11.4.8	Seismic design category
F_a	1	Site amplification factor at 0.2 second
F_v	null -See Section 11.4.8	Site amplification factor at 1.0 second
PGA	0.778	MCE_G peak ground acceleration
F_{PGA}	1.1	Site amplification factor at PGA
PGA_M	0.856	Site modified peak ground acceleration
T_L	8	Long-period transition period in seconds
SsRT	1.795	Probabilistic risk-targeted ground motion. (0.2 second)
SsUH	1.987	Factored uniform-hazard (2% probability of exceedance in 50 years) spectral acceleration
SsD	2.44	Factored deterministic acceleration value. (0.2 second)
S1RT	0.636	Probabilistic risk-targeted ground motion. (1.0 second)
S1UH	0.707	Factored uniform-hazard (2% probability of exceedance in 50 years) spectral acceleration.
S1D	0.836	Factored deterministic acceleration value. (1.0 second)
PGAd	0.992	Factored deterministic acceleration value. (Peak Ground Acceleration)
C_{RS}	0.903	Mapped value of the risk coefficient at short periods
C_{R1}	0.9	Mapped value of the risk coefficient at a period of 1 s

SOURCE: SEAOC/OSHPD Seismic Design Maps Tool
<https://seismicmaps.org/>

SEISMIC DESIGN PARAMETERS - 2019 CBC

PROPOSED COMMUNITY AQUATIC AND SENIOR CENTER

GARDENA, CALIFORNIA

DRAWN: OS
CHKD: RGT

SCG PROJECT
21G242-1

PLATE E-1

SoCalGeo
SOUTHERN CALIFORNIA GEOTECHNICAL

APPENDIX B

SOILS INFILTRATION TESTING REPORT

November 19, 2021

SOUTHERN CALIFORNIA GEOTECHNICAL
A California Corporation

RJM Design Group
31591 Camino Capistrano
San Juan Capistrano, California 92675

Attention: Mr. Eric Chastain, LLA
Principal, Landscape Architect

Project No.: **21G242-2**

Subject: **Results of Infiltration Testing**
Proposed Community Aquatic and Senior Center
1654 West 160th Street
Gardena, California

Reference: Geotechnical Investigation, Proposed Community Aquatic and Senior Center, 1654 West 160th Street, Gardena, California, prepared by Southern California Geotechnical, Inc. (SCG) for RJM Design Group, SCG project No. 21G242-1, dated November 19, 2021.

Mr. Chastain:

In accordance with your request, we have conducted infiltration testing at the subject site. We are pleased to present this report summarizing the results of the infiltration testing and our design recommendations.

Scope of Services

The scope of services performed for this project was in general accordance with our Proposal No. 21P336, dated July 28, 2021. The scope of services included site reconnaissance, subsurface exploration, field testing, and engineering analysis to determine the infiltration rates of the on-site soils. The infiltration testing was performed in general accordance with the Guidelines for Geotechnical Investigation and Reporting – Low Impact Development Stormwater Infiltration (GS200.1), prepared by Los Angeles County, Department of Public Works, Geotechnical and Materials Engineering Division, dated June 30, 2021.

Site and Project Description

The site is located at the street address of 1654 West 160th Street in Gardena, California. The site is bounded to the north by 160th Street, to the west by Harvard Boulevard, to the south by residential fourplexes and the Gardena Gymnasium, and to the east by La Salle Avenue. The general location of the site is illustrated on the Site Location Map, enclosed as Plate 1 in Appendix A of this report.

The site consists of multiple rectangular-shaped lots which total 0.9± acres in size. The lots are currently developed with the Primm Memorial Pool and two residential fourplexes with two detached garage structures. The existing structures range from 900 to 2,500± ft² in size. Several of the buildings share common walls. The majority of these buildings are one- to two-

story structures of wood frame and stucco construction, and are presumed to be supported on conventional shallow foundations with raised wood floors. The buildings are generally surrounded by Portland cement concrete (PCC) pavements which are in poor to fair condition, with moderate to severe cracking throughout. Turf grass and a few trees surround the buildings.

Detailed topographic information was not available at the time of this report. Based on elevations obtained from Google Earth, and visual observations made at the time of the subsurface investigation, the overall site topography is relatively flat.

Proposed Development

A preliminary conceptual site plan for the proposed development was provided to our office by the client. Based on the information provided by the client, demolition of the existing buildings, pool and pavements will be necessary to construct new development. The new development, identified as the Community Aquatics and Senior Center, will include a new L-shaped building, a 25-yard competition pool with a diving area, an activity pool, hardscape pathways, and new landscaping areas. The proposed swimming pool is expected to be 8 to 12± feet deep.

The proposed development will include on-site infiltration to dispose of storm water. We understand that the infiltration system will consists of a below-grade chamber system located in the western region of the site. The bottom of the chamber system is expected to be located at a depth of 10± feet below existing site grades.

Concurrent Study

Southern California Geotechnical, Inc. (SCG) concurrently performed a geotechnical investigation at the subject site, referenced above. As part of this investigation, SCG performed a total of four (4) borings advanced to depths of 20 to 25± feet below the existing site grades.

All of the borings were drilled through existing concrete slab areas. At Boring Nos. B-1 and B-2, the slabs consist of 3 and 3½± inches of Portland cement concrete (PCC) pavements with no reinforcement. At Boring Nos. B-3 and B-4, the slabs consist of 5± inches of PCC, reinforced with welded wire mesh. Artificial fill soils were encountered beneath the pavements at all of the boring locations. The fill soils generally consist of loose to medium dense silty fine sands and fine sandy silts, and stiff to very stiff silty clays, extending to depths of 2½± to 8± feet below the existing site grades. The fill soils possess a disturbed, mottled appearance, resulting in their classification as artificial fill. Native alluvium was encountered below the fill soils at all of the boring locations, extending to at least the maximum depth explored of 25± feet below existing site grades. The alluvium generally consists of loose to medium dense silty fine sands, clayey fine sands and fine sandy silts, and medium stiff to very stiff silty clays and clayey silts.

Groundwater

Free water was encountered during drilling at Boring Nos. B-3 and B-4 at a depth of about 23½± feet below ground surface. No delayed readings were performed at the boring locations due to caving within the open boreholes after the augers were withdrawn. Based on the moisture contents of the recovered soil samples and the observations made at the time of

drilling, the static groundwater table is considered to have existed at a depth of 23½± feet below existing site grades, at the time of the subsurface investigation.

Subsurface Exploration

Scope of Exploration

The subsurface exploration for the infiltration testing consisted of two (2) infiltration test borings advanced to a depth of 10± feet below the existing site grades. The borings were logged during drilling by a member of our staff and were advanced using a limited access drilling rig, equipped with 7-inch-diameter hollow stem augers. The approximate locations of the infiltration test borings (identified as I-1 and I-2) are indicated on the Infiltration Test Location Plan, enclosed as Plate 2 of this report.

Upon the completion of the infiltration borings, the bottom of each test boring was covered with 2± inches of clean ¾-inch gravel. A sufficient length of 3-inch-diameter perforated PVC casing was then placed into each test hole so that the PVC casing extended from the bottom of the test hole to the ground surface. Clean ¾-inch gravel was then installed in the annulus surrounding the PVC casing.

Geotechnical Conditions

Artificial fill soils were encountered at the ground surface at both of the boring locations, extending to a depth of 5± feet below the existing site grades. The fill soils generally consist of very stiff silty clays and sandy clays. Native alluvial soils were encountered beneath the fill soils at both of the infiltration boring locations, extending to at least the maximum depth explored of 10± feet below ground surface. The native alluvial soils consist of medium dense silty sands with little clay and medium dense clayey sands and stiff sandy clays. The Boring Logs, which illustrate the conditions encountered at the infiltration test locations, are included with this report.

Groundwater

Free water was not encountered during the drilling of any of the infiltration borings. Based on the moisture content of the recovered soil samples and the lack of free water in the borings, the static groundwater table exists at a depth greater than the maximum explored depth of 10± feet below existing site grades.

As part of our research, we reviewed available groundwater data in order to determine the historic high groundwater level for the site. The primary reference used to determine the historic groundwater depths in the area of the subject site is CGS Seismic Hazard Zone Report, Open File Report 98-18, Plate 1.3 for the Inglewood 7.5 Minute Quadrangle, which indicates that the historic high groundwater level for the site was 25± feet below the ground surface.

Infiltration Testing

As previously mentioned, the infiltration testing was performed in general accordance with the guidelines published by the County of Los Angeles – Department of Public Works Geotechnical

and Materials Engineering Division, titled Guidelines for Design, Investigation, and Reporting Low Impact Development Stormwater Infiltration, GS200.1.

Pre-soaking

Both of the infiltration test borings were pre-soaked for at least 1 hour to ensure the sand around the annulus of the perforated pipe was fully saturated. The pre-soaking procedure consisted of filling each test boring with clean potable water to an elevation of at least 12± inches above the bottom of each test boring. In accordance with the Los Angeles County guidelines, since the water in both of the infiltration test borings did not completely infiltrate within a 30-minute time period after filling each boring, a falling head test was the appropriate test method.

Infiltration Testing Procedure

After the completion of the pre-soaking process, SCG performed the infiltration testing. A sufficient amount of water was added to the test borings so that the water level was approximately 12± inches higher than the bottom of the borings and less than or equal to the water level used during the pre-soaking process. Readings were taken at 30-minute intervals at all of the infiltration test locations. A stabilized rate of drop, where the highest and lowest readings from three consecutive readings are within 10 percent of each other, was obtained for each of the test borings. These water level readings are presented on the spreadsheets enclosed with this report. The infiltration rates for each of the timed intervals are also tabulated on the spreadsheets.

The infiltration rates for the tests are tabulated in inches per hour. In accordance with the typically accepted practice, it is recommended that the most conservative reading from the latter part of the infiltration tests be used for design. These rates are summarized below:

Infiltration Test No.	Depth (feet)	Soil Description	Measured Infiltration Rate (inches/hour)
I-1	10	Light Brown Silty fine Sand, little Clay, trace medium Sand	0.9
I-2	10	Brown Clayey fine Sand to fine Sandy Clay, trace medium Sand	0.9

Laboratory Testing

Moisture Content

The moisture contents for selected soil samples from the trenches were determined in accordance with ASTM D-2216 and are expressed as a percentage of the dry weight. These test results are presented on the Boring Logs.

Grain Size Analysis

The grain size distribution of selected soils collected from the base of each infiltration test trench has been determined using a range of wire mesh screens. These tests were performed in general accordance with ASTM D-422 and/or ASTM D-1140. The weight of the portion of the sample retained on each screen is recorded and the percentage finer or coarser of the total weight is calculated. The results of the grainsize analysis are presented on Plates C-1 and C-2 of this report.

Design Recommendations

Two (2) infiltration tests were performed at the subject site. As noted above, the measured infiltration rates at the infiltration test locations are 0.9 inches per hour. The Guidelines for Geotechnical Investigation and Reporting Low Impact Development Stormwater Infiltration, GS200.1 prepared by the County of Los Angeles, Department of Public Works, Geotechnical and Materials Division (GMED) on June 30, 2021 dictate that a reduction factor be utilized in the design infiltration rate. The following reduction factors are considered in the design infiltration rate:

Reduction Factor	
Small Diameter Boring	$RF_t = 1$
Site Variability, number of tests, and thoroughness of subsurface investigation	$RF_v = 1$
Long-term siltation plugging and maintenance	$RF_v = 1$
Total Reduction Factor, $RF = RF_t + RF_v + RF_v$	$RF = 3$
Design Infiltration Rate (DIR) = Measured Infiltration Rate (MIR)/RF	**DIR = 0.3**

Based on the results of the infiltration testing and reduction factors, we recommend an infiltration rate of **0.3 inches per hour** be used for the proposed infiltration system located in the western area of the subject site. The major factor affecting the lack of infiltration at these locations is the presence of very fine-grained soils.

The design of the proposed storm water infiltration systems should be performed by the project civil engineer, in accordance with the City of Gardena/County of Los Angeles guidelines. However, it is recommended that the system be constructed so as to facilitate removal of silt and clay, or other deleterious materials from any water that may enter the systems. The presence of such materials would decrease the effective infiltration rates. **It is recommended that the project civil engineer apply an appropriate factor of safety. The infiltration rates recommended above are based on the assumption that only clean water will be introduced to the subsurface profile. Any fines, debris, or organic materials could significantly impact the infiltration rates.** It should be noted that the recommended infiltration rates are based on infiltration testing at two (2) discrete locations and the overall infiltration rates of the storm water infiltration systems could vary considerably.

Infiltration Rate Considerations

The infiltration rates presented herein were determined in accordance with the Los Angeles County guidelines and are considered valid only for the time and place of the actual test. Varying subsurface conditions will exist in other areas of the site, which could alter the recommended infiltration rates

presented above. The infiltration rates will decline over time between maintenance cycles as silt or clay particles accumulate on the BMP surface. The infiltration rate is highly dependent upon a number of factors, including density, silt and clay content, grainsize distribution throughout the range of particle sizes, and particle shape. Small changes in these factors can cause large changes in the infiltration rates.

Infiltration rates are based on unsaturated flow. As water is introduced into soils by infiltration, the soils become saturated and the wetting front advances from the unsaturated zone to the saturated zone. Once the soils become saturated, infiltration rates become zero, and water can only move through soils by hydraulic conductivity at a rate determined by pressure head and soil permeability. Changes in soil moisture content will affect the infiltration rate. Infiltration rates should be expected to decrease until the soils become saturated. Soil permeability values will then govern groundwater movement. Permeability values may be on the order of 10 to 20 times less than infiltration rates. The system designer should incorporate adequate factors of safety and allow for overflow design into appropriate traditional storm drain systems, which would transport storm water off-site.

Construction Considerations

The infiltration rates presented in this report are specific to the tested locations and tested depths. Infiltration rates can be significantly reduced if the soils are exposed to excessive disturbance or compaction during construction. Compaction of the soils at the bottom of the infiltration system can significantly reduce the infiltration ability of the basins. Therefore, the subgrade soils within proposed infiltration system areas should not be over-excavated, undercut or compacted in any significant manner. **It is recommended that a note to this effect be added to the project plans and/or specifications.**

We recommend that a representative from the geotechnical engineer be on-site during the construction of the proposed infiltration systems to identify the soil classification at the base of each system. It should be confirmed that the soils at the base of the proposed infiltration systems correspond with those presented in this report to ensure that the performance of the systems will be consistent with the rates reported herein.

We recommend that scrapers and other rubber-tired heavy equipment not be operated on the basin bottom, or at levels lower than 2 feet above the bottom of the system, particularly within basins. As such, the bottom 24 inches of the infiltration systems should be excavated with non-rubber-tired equipment, such as excavators.

Location of Infiltration Systems

The use of on-site storm water infiltration systems carries a risk of creating adverse geotechnical conditions. Increasing the moisture content of the soil can cause the soil to lose internal shear strength and increase its compressibility, resulting in a change in the designed engineering properties. Overlying structures and pavements in the infiltration area could potentially be damaged due to saturation of the subgrade soils. **The proposed infiltration systems for this site should be located at least 25 feet away from any structures, including retaining walls.** Even with this provision of locating the infiltration system at least 25 feet from the building(s), it is possible that infiltrating water into the subsurface soils could have an adverse effect on the proposed or existing structures. It should also be noted that utility trenches which happen to collect storm water can also serve as conduits to transmit storm water toward the structure, depending on the slope of the utility trench. Therefore,

consideration should also be given to the proposed locations of underground utilities which may pass near the proposed infiltration system.

The infiltration system designer should also give special consideration to the effect that the proposed infiltration systems may have on nearby subterranean structures, open excavations, or descending slopes. In particular, infiltration systems should not be located near the crest of descending slopes, particularly where the slopes are comprised of granular soils. Such systems will require specialized design and analysis to evaluate the potential for slope instability, piping failures and other phenomena that typically apply to earthen dam design. This type of analysis is beyond the scope of this infiltration test report, but these factors should be considered by the infiltration system designer when locating the infiltration systems.

General Comments

This report has been prepared as an instrument of service for use by the client in order to aid in the evaluation of this property and to assist the architects and engineers in the design and preparation of the project plans and specifications. This report may be provided to the contractor(s) and other design consultants to disclose information relative to the project. However, this report is not intended to be utilized as a specification in and of itself, without appropriate interpretation by the project architect, structural engineer, and/or civil engineer. The design of the infiltration system is the responsibility of the civil engineer. The role of the geotechnical engineer is limited to determination of infiltration rate only. By using the design infiltration rates contained herein, the civil engineer agrees to indemnify, defend, and hold harmless the geotechnical engineer for all aspects of the design and performance of the infiltration system. The reproduction and distribution of this report must be authorized by the client and Southern California Geotechnical, Inc. Furthermore, any reliance on this report by an unauthorized third party is at such party's sole risk, and we accept no responsibility for damage or loss which may occur. The analysis of this site was based on a subsurface profile interpolated from limited discrete soil samples. While the materials encountered in the project area are considered to be representative of the total area, some variations should be expected between trench locations and testing depths. If the conditions encountered during construction vary significantly from those detailed herein, we should be contacted immediately to determine if the conditions alter the recommendations contained herein.

This report has been based on assumed or provided characteristics of the proposed development. It is recommended that the owner, client, architect, structural engineer, and civil engineer carefully review these assumptions to ensure that they are consistent with the characteristics of the proposed development. If discrepancies exist, they should be brought to our attention to verify that they do not affect the conclusions and recommendations contained herein. We also recommend that the project plans and specifications be submitted to our office for review to verify that our recommendations have been correctly interpreted. The analysis, conclusions, and recommendations contained within this report have been promulgated in accordance with generally accepted professional geotechnical engineering practice. No other warranty is implied or expressed.

Closure

We sincerely appreciate the opportunity to be of service on this project. We look forward to providing additional consulting services during the course of the project. If we may be of further assistance in any manner, please contact our office.

Respectfully Submitted,

SOUTHERN CALIFORNIA GEOTECHNICAL, INC.

Oscar Sandoval
Staff Engineer

Gregory K. Mitchell, GE 2364
Principal Engineer

REGISTERED PROFESSIONAL ENGINEER
GREGORY K. MITCHELL
No. 2364
Exp. 09/30/22
GEOTECHNICAL
STATE OF CALIFORNIA

Distribution: (1) Addressee

Enclosures: Plate 1 - Site Location Map
Plate 2 - Infiltration Test Location Plan
Boring Logs & Boring Log Legend (4 pages)
Infiltration Test Results Spreadsheets (2 pages)
Grain Size Distribution Results (2 pages)

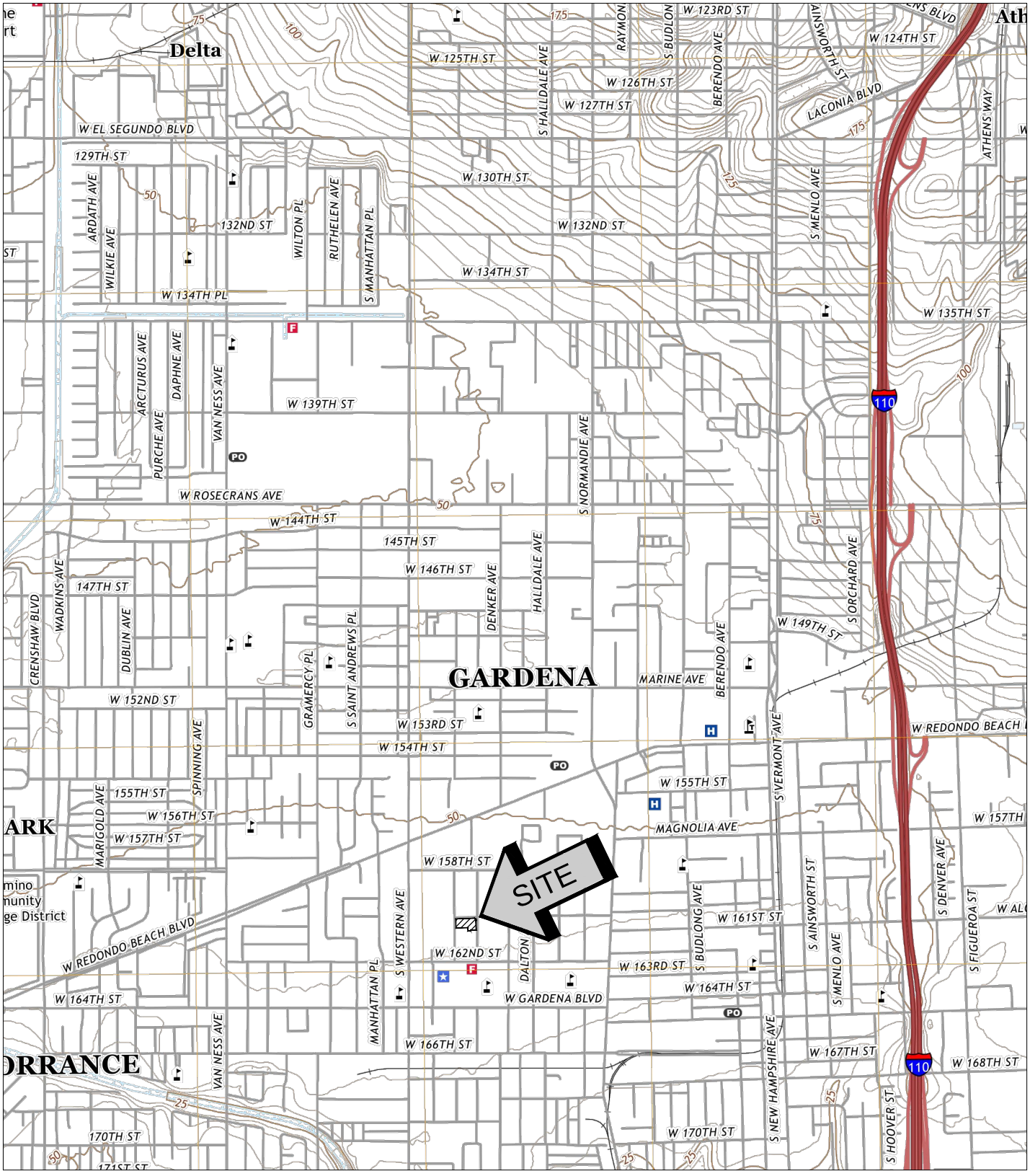

SOURCE: USGS TOPOGRAPHIC MAP OF THE INGLEWOOD QUADRANGLE, LOS ANGELES COUNTY, CALIFORNIA, 2018.

SITE LOCATION MAP

PROPOSED COMMUNITY AQUATIC AND SENIOR CENTER

GARDENA, CALIFORNIA

SCALE: 1" = 2000'	
DRAWN: OS CHKD: GKM	
SCG PROJECT 21G242-2	
PLATE 1	

SoCalGeo

SOUTHERN CALIFORNIA GEOTECHNICAL



NORTH
SoCalGeo

GEOTECHNICAL LEGEND

- APPROXIMATE BORING LOCATION
- PROPOSED INFILTRATION LOCATION

NOTE: CONCEPTUAL SITE PLAN PREPARED BY RJM DESIGN GROUP.
AERIAL PHOTOGRAPH OBTAINED FROM GOOGLE EARTH

INFILTRATION TEST LOCATION PLAN

PROPOSED COMMUNITY AQUATIC AND SENIOR CENTER

GARDENA, CALIFORNIA

SCALE: 1" = 30'	
DRAWN: OS CHKD: GKM	
SCG PROJECT 21G242-2	
PLATE 2	

SoCalGeo
SOUTHERN CALIFORNIA GEOTECHNICAL

BORING LOG LEGEND

SAMPLE TYPE	GRAPHICAL SYMBOL	SAMPLE DESCRIPTION
AUGER		SAMPLE COLLECTED FROM AUGER CUTTINGS, NO FIELD MEASUREMENT OF SOIL STRENGTH. (DISTURBED)
CORE		ROCK CORE SAMPLE: TYPICALLY TAKEN WITH A DIAMOND-TIPPED CORE BARREL. TYPICALLY USED ONLY IN HIGHLY CONSOLIDATED BEDROCK.
GRAB		SOIL SAMPLE TAKEN WITH NO SPECIALIZED EQUIPMENT, SUCH AS FROM A STOCKPILE OR THE GROUND SURFACE. (DISTURBED)
CS	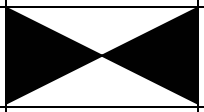	CALIFORNIA SAMPLER: 2-1/2 INCH I.D. SPLIT BARREL SAMPLER, LINED WITH 1-INCH HIGH BRASS RINGS. DRIVEN WITH SPT HAMMER. (RELATIVELY UNDISTURBED)
NSR		NO RECOVERY: THE SAMPLING ATTEMPT DID NOT RESULT IN RECOVERY OF ANY SIGNIFICANT SOIL OR ROCK MATERIAL.
SPT	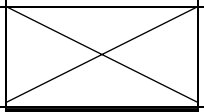	STANDARD PENETRATION TEST: SAMPLER IS A 1.4 INCH INSIDE DIAMETER SPLIT BARREL, DRIVEN 18 INCHES WITH THE SPT HAMMER. (DISTURBED)
SH		SHELBY TUBE: TAKEN WITH A THIN WALL SAMPLE TUBE, PUSHED INTO THE SOIL AND THEN EXTRACTED. (UNDISTURBED)
VANE	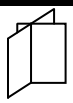	VANE SHEAR TEST: SOIL STRENGTH OBTAINED USING A 4 BLADED SHEAR DEVICE. TYPICALLY USED IN SOFT CLAYS-NO SAMPLE RECOVERED.

COLUMN DESCRIPTIONS

DEPTH: Distance in feet below the ground surface.

SAMPLE: Sample Type as depicted above.

BLOW COUNT: Number of blows required to advance the sampler 12 inches using a 140 lb hammer with a 30-inch drop. 50/3" indicates penetration refusal (>50 blows) at 3 inches. WH indicates that the weight of the hammer was sufficient to push the sampler 6 inches or more.

POCKET PEN.: Approximate shear strength of a cohesive soil sample as measured by pocket penetrometer.

GRAPHIC LOG: Graphic Soil Symbol as depicted on the following page.

DRY DENSITY: Dry density of an undisturbed or relatively undisturbed sample in lbs/ft^3.

MOISTURE CONTENT: Moisture content of a soil sample, expressed as a percentage of the dry weight.

LIQUID LIMIT: The moisture content above which a soil behaves as a liquid.

PLASTIC LIMIT: The moisture content above which a soil behaves as a plastic.

PASSING #200 SIEVE: The percentage of the sample finer than the #200 standard sieve.

UNCONFINED SHEAR: The shear strength of a cohesive soil sample, as measured in the unconfined state.

SOIL CLASSIFICATION CHART

MAJOR DIVISIONS			SYMBOLS		TYPICAL DESCRIPTIONS
			GRAPH	LETTER	
COARSE GRAINED SOILS MORE THAN 50% OF MATERIAL IS LARGER THAN NO. 200 SIEVE SIZE	GRAVEL AND GRAVELLY SOILS MORE THAN 50% OF COARSE FRACTION RETAINED ON NO. 4 SIEVE	CLEAN GRAVELS (LITTLE OR NO FINES)		GW	WELL-GRADED GRAVELS, GRAVEL - SAND MIXTURES, LITTLE OR NO FINES
				GP	POORLY-GRADED GRAVELS, GRAVEL - SAND MIXTURES, LITTLE OR NO FINES
		GRAVELS WITH FINES (APPRECIABLE AMOUNT OF FINES)	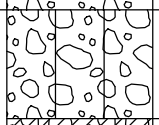	GM	SILTY GRAVELS, GRAVEL - SAND - SILT MIXTURES
			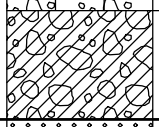	GC	CLAYEY GRAVELS, GRAVEL - SAND - CLAY MIXTURES
	SAND AND SANDY SOILS MORE THAN 50% OF COARSE FRACTION PASSING ON NO. 4 SIEVE	CLEAN SANDS (LITTLE OR NO FINES)	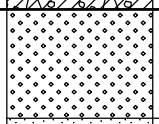	SW	WELL-GRADED SANDS, GRAVELLY SANDS, LITTLE OR NO FINES
			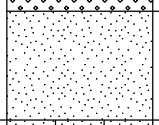	SP	POORLY-GRADED SANDS, GRAVELLY SAND, LITTLE OR NO FINES
		SANDS WITH FINES (APPRECIABLE AMOUNT OF FINES)	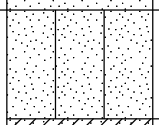	SM	SILTY SANDS, SAND - SILT MIXTURES
			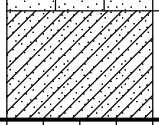	SC	CLAYEY SANDS, SAND - CLAY MIXTURES
FINE GRAINED SOILS MORE THAN 50% OF MATERIAL IS SMALLER THAN NO. 200 SIEVE SIZE	SILTS AND CLAYS	LIQUID LIMIT LESS THAN 50	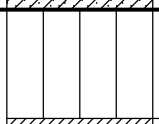	ML	INORGANIC SILTS AND VERY FINE SANDS, ROCK FLOUR, SILTY OR CLAYEY FINE SANDS OR CLAYEY SILTS WITH SLIGHT PLASTICITY
			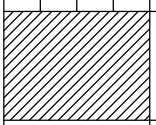	CL	INORGANIC CLAYS OF LOW TO MEDIUM PLASTICITY, GRAVELLY CLAYS, SANDY CLAYS, SILTY CLAYS, LEAN CLAYS
			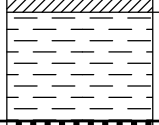	OL	ORGANIC SILTS AND ORGANIC SILTY CLAYS OF LOW PLASTICITY
	SILTS AND CLAYS	LIQUID LIMIT GREATER THAN 50	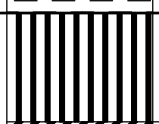	MH	INORGANIC SILTS, MICACEOUS OR DIATOMACEOUS FINE SAND OR SILTY SOILS
			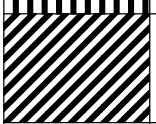	CH	INORGANIC CLAYS OF HIGH PLASTICITY
			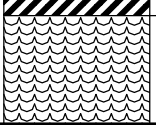	OH	ORGANIC CLAYS OF MEDIUM TO HIGH PLASTICITY, ORGANIC SILTS
HIGHLY ORGANIC SOILS			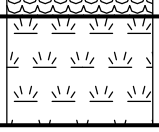	PT	PEAT, HUMUS, SWAMP SOILS WITH HIGH ORGANIC CONTENTS

NOTE: DUAL SYMBOLS ARE USED TO INDICATE BORDERLINE SOIL CLASSIFICATIONS

SOUTHERN CALIFORNIA GEOTECHNICAL
A California Corporation

BORING NO. I-1

JOB NO.: 21G242-2
PROJECT: Community Aquatic & Senior Center
LOCATION: Gardena, California

DRILLING DATE: 10/20/21
DRILLING METHOD: Hollow Stem Auger
LOGGED BY: Oscar Sandoval

WATER DEPTH: Dry
CAVE DEPTH: ---
READING TAKEN: At Completion

FIELD RESULTS						LABORATORY RESULTS						
DEPTH (FEET)	SAMPLE	BLOW COUNT	POCKET PEN. (TSF)	GRAPHIC LOG	DESCRIPTION SURFACE ELEVATION: MSL	DRY DENSITY (PCF)	MOISTURE CONTENT (%)	LIQUID LIMIT	PLASTIC LIMIT	PASSING #200 SIEVE (%)	ORGANIC CONTENT (%)	COMMENTS
					FILL: Dark Gray Brown Silty Clay, trace Iron oxide staining, trace fine root fibers, very stiff-moist to very moist							
		17					17					
5					ALLUVIUM: Light Brown Silty fine Sand, little Clay, trace medium Sand, medium dense-very moist							
		15					15			30		
10					Boring Terminated at 10'							

TBL 21G242-2.GPJ SOCALGEO.GDT 11/19/21

TEST BORING LOG

PLATE B-1

SOUTHERN CALIFORNIA GEOTECHNICAL
A California Corporation

BORING NO. I-2

JOB NO.: 21G242-2
PROJECT: Community Aquatic & Senior Center
LOCATION: Gardena, California

DRILLING DATE: 10/20/21
DRILLING METHOD: Hollow Stem Auger
LOGGED BY: Oscar Sandoval

WATER DEPTH: Dry
CAVE DEPTH: ---
READING TAKEN: At Completion

FIELD RESULTS						LABORATORY RESULTS						
DEPTH (FEET)	SAMPLE	BLOW COUNT	POCKET PEN. (TSF)	GRAPHIC LOG	DESCRIPTION SURFACE ELEVATION: MSL	DRY DENSITY (PCF)	MOISTURE CONTENT (%)	LIQUID LIMIT	PLASTIC LIMIT	PASSING #200 SIEVE (%)	ORGANIC CONTENT (%)	COMMENTS
					FILL: Dark Brown fine Sandy Clay, trace fine root fibers, very stiff-moist to very moist							
							16					
5					ALLUVIUM: Brown Clayey fine Sand to fine Sandy Clay, trace medium Sand, medium dense to stiff-moist							
							14			50		
10					Boring Terminated at 10'							

TBL 21G242-2.GPJ SOCALGEO.GDT 11/19/21

TEST BORING LOG **PLATE B-2**

INFILTRATION CALCULATIONS

Project Name	Proposed Community Aquatic and Senior Center
Project Location	Gardena, CA
Project Number	21G242-2
Engineer	OS

Test Hole Radius	3.50	(in)
Test Depth	10.15	(ft)

Infiltration Test Hole: I-1

Start Time for Pre-Soak	8:45 AM	Water Remaining in Boring (Y/N)	Y
Start Time for Standard	9:15 AM	Time Interal Between Readings	30min

Interval Number		Time	Time Interval (min)	Water Depth (ft)	Change in Water Level (ft)	Average Head Height (ft)	Measured Infiltration Rate Q (in/hr)	Reduction Factor (RF)	Design Infiltration Rate Q (in/hr)
1	Initial	9:15 AM	30.0	8.40	0.55	1.5	1.2	3.0	0.4
	Final	9:45 AM		8.95					
2	Initial	9:45 AM	30.0	8.30	0.55	1.6	1.1	3.0	0.4
	Final	10:15 AM		8.85					
3	Initial	10:15 AM	30.0	8.20	0.55	1.7	1.1	3.0	0.4
	Final	10:45 AM		8.75					
4	Initial	10:45 AM	30.0	8.25	0.55	1.6	1.1	3.0	0.4
	Final	11:15 AM		8.80					
5	Initial	11:15 AM	30.0	8.25	0.55	1.6	1.1	3.0	0.4
	Final	11:45 AM		8.80					
6	Initial	11:45 AM	30.0	8.30	0.45	1.6	0.9	3.0	0.3
	Final	12:15 PM		8.75					

Design Infiltration Rate = (Measured Infiltration Rate)/(Reduction Factor)

Reduction Factor (RF) = $RF_t+RF_v+RF_s$

Reduction Factors	
Double-ring Infiltrometer	RF_t = 1 to 3
Shallow Test Pit	
Small Diameter Boring	
Large Diameter Boring	
High Fow-rate	RF_t = 3
Grain Size Analysis Method	RF_t = 2 to 3
Site variability, number of tests and thoroughness of subsurface investigation	RF_v = 1 to 3
Long-term siltation, plugging, and maintenance	RF_s = 1 to 3

$$Q = \frac{\Delta H(60r)}{\Delta t(r+2H_{avg})}$$

Where:
- Q = Measured Infiltration Rate (in inches per hour)
- ΔH = Change in Height (Water Level) over the time interval
- r = Test Hole (Borehole) Radius
- Δt = Time Interval
- H_{avg} = Average Head Height over the time interval

INFILTRATION CALCULATIONS

Project Name	Proposed Community Aquatic and Senior Center
Project Location	Gardena, CA
Project Number	21G242-2
Engineer	OS

Test Hole Radius	3.50	(in)
Test Depth	10.25	(ft)

Infiltration Test Hole: I-2

Start Time for Pre-Soak	8:16 AM	Water Remaining in Boring (Y/N)	Y
Start Time for Standard	8:46 AM	Time Interal Between Readings	30min

Interval Number		Time	Time Interval (min)	Water Depth (ft)	Change in Water Level (ft)	Average Head Height (ft)	Measured Infiltration Rate Q (in/hr)	Reduction Factor (RF)	Design Infiltration Rate Q (in/hr)
1	Initial	8:46 AM	30.0	8.80	0.45	1.2	1.1	3.0	0.4
	Final	9:16 AM		9.25					
2	Initial	9:16 AM	30.0	8.80	0.45	1.2	1.1	3.0	0.4
	Final	9:46 AM		9.25					
3	Initial	9:46 AM	30.0	8.80	0.35	1.3	0.9	3.0	0.3
	Final	10:16 AM		9.15					
4	Initial	10:16 AM	30.0	8.80	0.35	1.3	0.9	3.0	0.3
	Final	10:46 AM		9.15					
5	Initial	10:46 AM	30.0	8.80	0.35	1.3	0.9	3.0	0.3
	Final	11:16 AM		9.15					
6	Initial	11:16 AM	30.0	8.80	0.35	1.3	0.9	3.0	0.3
	Final	11:46 AM		9.15					

Design Infiltration Rate = (Measured Infiltration Rate)/(Reduction Factor)
Reduction Factor (RF) = $RF_t+RF_v+RF_s$

Reduction Factors	
Double-ring Infiltrometer	RF_t = 1 to 3
Shallow Test Pit	
Small Diameter Boring	
Large Diameter Boring	
High Fow-rate	RF_t = 3
Grain Size Analysis Method	RF_t = 2 to 3
Site variability, number of tests and thoroughness of subsurface investigation	RF_v = 1 to 3
Long-term siltation, plugging, and maintenance	RF_s = 1 to 3

$$Q = \frac{\Delta H(60r)}{\Delta t(r+2H_{avg})}$$

Where:
- Q = Measured Infiltration Rate (in inches per hour)
- ΔH = Change in Height (Water Level) over the time interval
- r = Test Hole (Borehole) Radius
- Δt = Time Interval
- H_{avg} = Average Head Height over the time interval

Grain Size Distribution

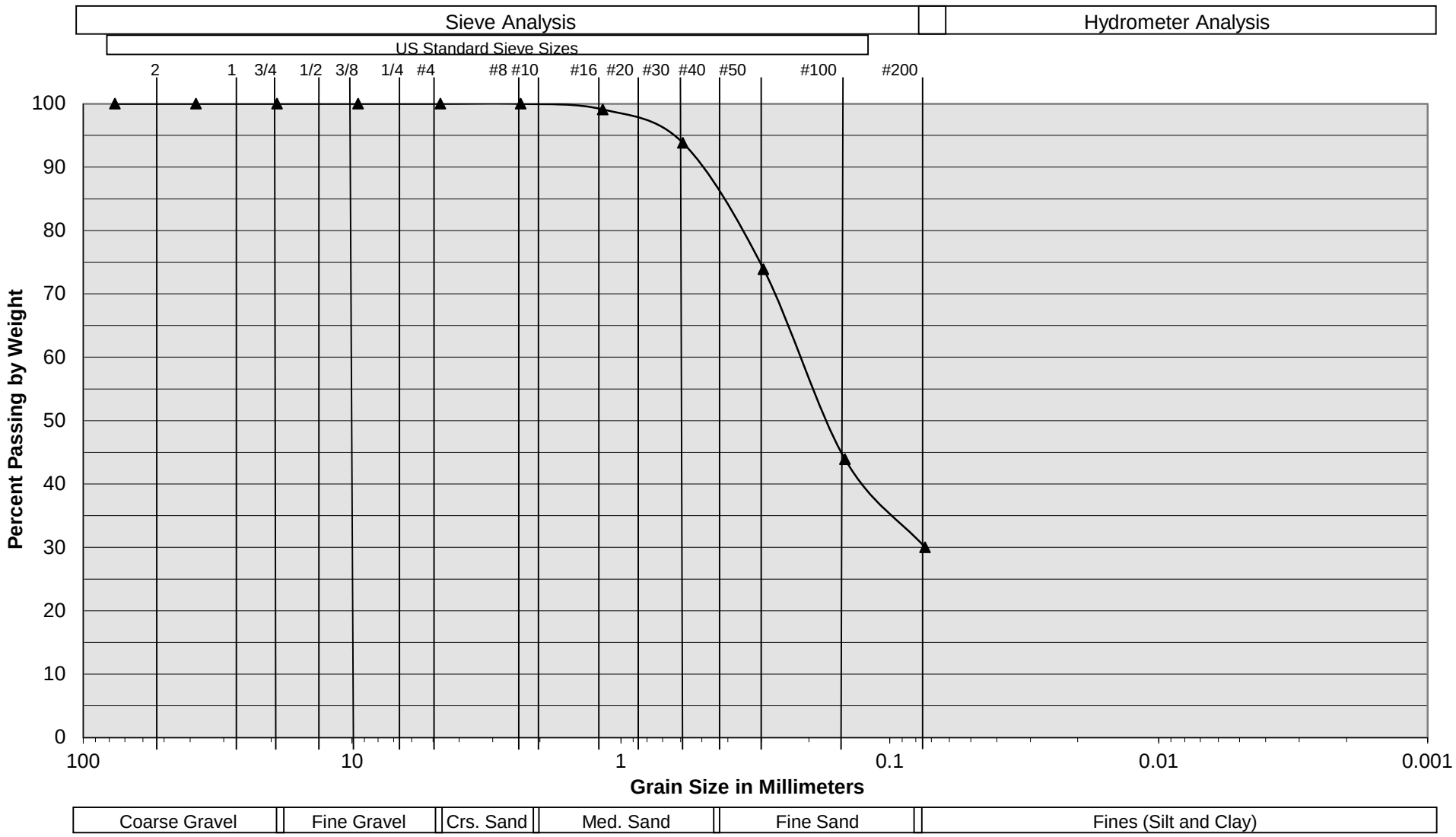

Sample Description	I-1 @ 8½'
Soil Classification	Light Brown Silty fine Sand, little Clay, trace medium Sand

Proposed Community Aquatic and Senior Center
Gardena, CA
Project No. 21G242-2
PLATE C- 1

SoCalGeo
SOUTHERN CALIFORNIA GEOTECHNICAL
A California Corporation

Grain Size Distribution

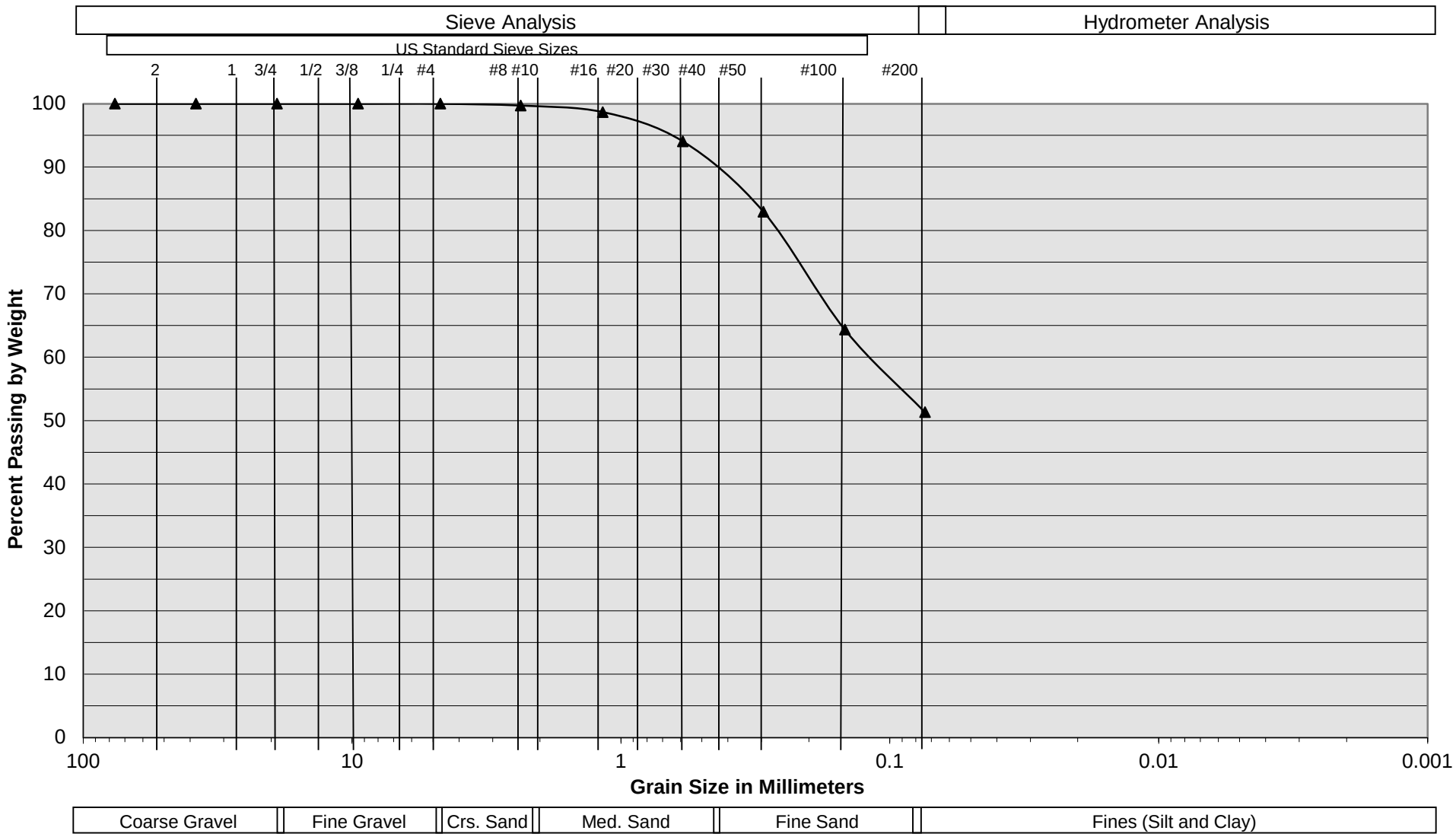

Sample Description	I-2 @ 8½'
Soil Classification	Brown Clayey fine Sand to fine Sandy Clay, trace medium Sand

Proposed Community Aquatic and Senior Center
Gardena, CA
Project No. 21G242-2
PLATE C- 2

SoCalGeo
SOUTHERN CALIFORNIA GEOTECHNICAL
A California Corporation

APPENDIX C

CONSTRUCTION NOTIFICATION AREA MAP

GARDENA COMMUNITY AQUATIC AND SENIOR CENTER PROJECT, JN 978



1" = 300 ft	Construction Notification Area Map	APPENDIX C	

This map may represents a visual display of related geographic information. Data provided here on is not guarantee of acutual field conditions. To be sure of complete accuracy, please contact the responsible staff for most up-to-date information.

APPENDIX D

DRY UTILITY CONSTRUTION SUPPORT PLANS

CUSTOMER CONTACT: KEVIN KWAK 310-217-9643
SERVICE PLANNER: JOSHUA REMIJIO 562-756-3241
PRE CONSTRUCTION INSPECTOR: RON WHITTAKER 310-710-9606

EXISTING SINGLE LINE
COPRA 4KV
MONETA SUB

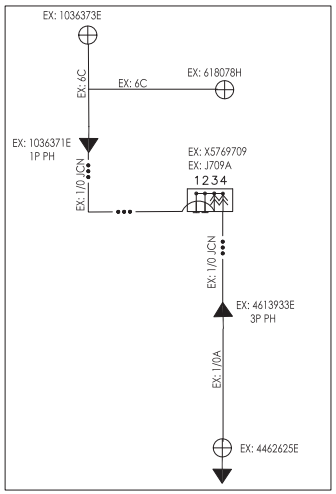

PROPOSED SINGLE LINE
COPRA 4KV
MONETA SUB

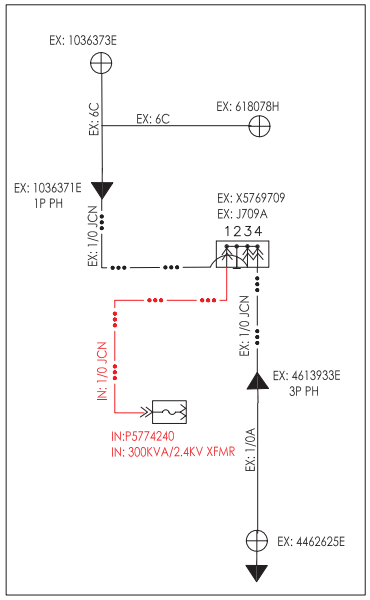

CITY OF GARDENA
2SN- COMM/INDUST M&S UG
COPRA 4KV
MONETA SUB

UNDERGROUND SERVICE ALERT
Contact USA
Dial 811 or 800-422-4133
www.digalert.org/contact
For Underground Locating
Two Working Days Before You Dig
D16: Rev. 05/28/20

TD2136115
EX: X5769709 PULL BOX 1
3'X5'X4' CONCRETE FULL TRAFFIC
CF: 160' – CM DUCT 5"
CF: 165' – CM DUCT FOR EXCAVATION
IN: 190 – CBL 1/0 AL 3-1/C 17KV CLP PJ
MI: 8 – CBL 1/0 AL 3-1/C 17KV CLP PJ
NOTE: EX: 5" CAPPED CONDUIT WORK TO BE DONE ON TD:2030934

1 | 115' | 160'
P/L TO CAP
IN: 190' 3-1/0 JCN 16KV
TENSION 3-1/0 JCN 5" DUCT
P4240 TO CAP – 297 LBS
CAP TO P4240 – 463 LBS

W 160TH ST

CURB | PROPERTY LINE | SIDEWALK | 5' EXISTING STREET EASEMENT | CURB | PROPERTY LINE | SIDEWALK | 5' EXISTING STREET EASEMENT
EX: 5" CAPPED CONDUIT

CO: 1–5" (32")
P4240 TO P/L
IN: 190' 3–1/0 JCN 16KV
TENSION 3–1/0 JCN 5" DUCT
P4240 TO CAP – 297 LBS
CAP TO P4240 – 463 LBS

VD=0.28
400 PANEL
277/480V 3P
122KW 0TONS
1654 W 160TH ST
GARDENA,CA 90247

TD2136115
2 CO:P5774240 PAD
94"X72" CONCRETE
CO: 1 – S PRECAST PAD 72" X 94"
IN: 1 – CNN BOLTS PM 4/0 AND UP 12/16KV 3P
IN: 1 – TR PM F DE 300KVA 4KV 277/480Y 3P
SN:
IN: 24' – CBL (2) 4/0, (1) 1/0 600V CLP PLEX
MI: 8' – CBL (2) 4/0, (1) 1/0 600V CLP PLEX
IN: 2 – CNN HYLUGS PM 3–4/0 1–1/0 12/16KV 3P
IN: 1 – MTR XRANGE CT BAR TO 600/5 277/480 3P 4W

CO: 1–4" (24")
P4240 TO PNL
IN: 24' 4/0 1P
TENSION 4/0 1P 4" DUCT
P4240 TO PNL – 6 LBS

S HARVARD BLVD

16010 HARVARD BLVD

LA SALLE AVE

T.L.M. DATA: P5774240

	SIZE	KVA	CUST	% LOAD
EXIST.	0	0	0	0%
PROP.	300	143	1	47%

VOLTAGE DROP: 0.28
FLICKER FACTOR: N/A
PRI. CIRCUIT: COPRA 4KV
D27: REV. 12/10/21

THIS PLAN APPROVED AS TO LOCATION AND TYPE OF ELECTRIC SUBSTRUCTURES
Developer:
Attn:
Address:
Telephone:
FAX:

Dwg./Rev.	Developer's Signature	Date
Original		
Rev.		
Rev.		
Rev.		

CHANGES IN THESE PLANS WILL REQUIRE AN ADDITIONAL 3 TO 4 WEEKS AND CUSTOMER WILL BE CHARGED IN ADVANCE FOR REQUESTED CHANGES.
D26: Rev. 02/12/08

CUSTOMER AND CREW MAP
TD2136115

PROJECT REQUIREMENTS (Y/N)

EDISON EASEMENT REQUIRED	N
PWRD 88 REQUIRED	N
UG CIVIL ONLY WORK ORDER	N
PERMIT REQUIRED	Y
PERMIT TYPE: ENCROACHMENT	
OUTAGE REQUIRED	N
OUTAGE DATE: N TIME: N	
TRAFFIC CONTROL REQUIRED	Y
PED. TRAFFIC CONTROL REQ'D	N
CONVEYANCE LETTER REQ'D	N
ENVIRONMENTAL REQUIREMENTS DOCUMENT (ERD) REQUIRED	N
CSD 140 (TLM) REQ'D	Y
CIRCUIT MAP CHANGE REQ'D (TD 203)	Y
DIG ALERT APP	Y
VERIFIED ACTIVE AND CONFIRMED USA TICKETS	☐
UTILIQUEST NOTIFIED	☐
STANDARD ADHERENCE: 2ND Q/ 2023 Y	

D124: Rev. 03/21/23

N

SOUTHERN CALIFORNIA EDISON
An EDISON INTERNATIONAL Company

SCALE: 1" = 20'
0 20 40

FINAL DESIGN
APPROVED FOR CONSTRUCTION

DISTRICT: 44 – SOUTH BAY	PROJ MGR. REMIJIO, JOSHUA M PHONE 562-756-3241	PLANNER REMIJIO, JOSHUA M PHONE 562-756-3241	DESIGNER ELLIS, CASSANDRA D	
PROJECT NO. 2653032	SERVICE REQUEST 3540168	MSR NO.	PRODUCT–1 2136115–NEW METER & SERVICE	ASSOC DESGN
CIRCUIT / VOLTAGE COPRA 4KV		GPS	PRODUCT–2	ASSOC DESGN
SUB / PG NO. MONETA		CIRCUIT CODE	PRODUCT–3	ASSOC DESGN
INVENTORY MAP 043–068A	J.P.A. NO.		PROPOSED CONSTRUCTION (LOCATION) NEW SERVICE 400A – 277/480A – 3P – 4W 1654 W 160TH ST GARDENA CA 90247	

TYPE	DATE	APPROVED BY	CHECKED BY	DRAWN BY	PAX #
F	6/13/2023	MICHAEL GLENN	JOSHUA REMIJIO	C ELLIS	33308

Southern California Edison Company

SHEET 1 OF 2

DESIGN\DRWG NO. 1629466_1.01

FILE NAME: 1629466_1.01.DWG SAVE DATE: 6/13/2023 12:18 PM SAVED BY: CHRIS

CITY OF GARDENA
2SN- COMM/INDUST M&S UG
COPRA 4KV
MONETA SUB

CUSTOMER AND CREW MAP
TD2136115

WARNING

THE EXCAVATOR MUST TAKE ALL STEPS NECESSARY TO AVOID CONTACT WITH UNDERGROUND FACILITIES WHICH MAY RESULT IN INJURY TO PERSONS OR DAMAGE TO FACILITIES IN THE AREA. THE INDICATED LOCATIONS OF EDISON UNDERGROUND FACILITIES, AS PROVIDED, ARE BELIEVED TO BE ACCURATE. HOWEVER, THE FINAL DETERMINATION OF EXACT LOCATIONS AND THE COST OF REPAIR TO DAMAGED FACILITIES IS THE RESPONSIBILITY OF THE EXCAVATOR.

CONSTRUCTION NOTES:

Unless otherwise specified on the working drawing which forms a part of the specification, the Contractor/Developer shall furnish the following items at no cost to the Edison Company.

Southern California Edison Company has attempted to correctly show all existing utilities and substructures in the vicinity of the work, but does not guarantee there are no other substructures in the area. Failure of SCE to show all substructures in their correct location will not be a basis for a claim for extra work, and the contractor shall be responsible for all damages to substructures whether shown or not.

1. FOR GENERAL SPECIFICATIONS SEE UGS GI 001.

2. CONDUIT:
   a. Minimum cover in street or parkway is 30" below gutter grade, unless noted otherwise.
   b. Minimum cover on private property is 30" below finished grade, unless noted otherwise.
   c. Contractor is to furnish and install approved conduit to Edison specifications per UGS CD 100.1, 110 AND 120.
   d. For the type of conduit for this job, See UGS CD 110.1.
   e. Install all risers per UGS CD 160, 161, 162 and 170.
   f. Cap all mainline conduits per UGS CD 148 and service conduits per UGS CD 150.
   g. Install blank conduit plugs in all conduits terminating into Vaults, Manhole's, PMH's, SOE's & all cap locations, per UGS CD 180.1 & UGS CD 180.2
   h. Install pull rope in all conduit runs. Pull rope to be at least 3/8" polypropylene rope, braided or twisted. For specifications, approved makes, and suppliers, see UGS GI 040.
   i. All conduit must be mandreled with the approved mandrel UGS CD 197.

3. CONDUIT RADIUS REQUIREMENTS:
   a: The minimum radius for bends are:
      36" for conduits 3" in diameter or smaller
      48" for conduits 4" and 5" in diameter
      60" for 6" diameter conduit
   b: The minimum radius for all sweeps of all mainline conduits is 12'-6" (unless noted otherwise).

4. EXCAVATION AND BACKFILL:
   a. Work area shall be cleared and rough graded to within four inches of final grade prior to installation of Edison conduit or structures.
   b. All excavations shall be in accordance with the California State Construction Safety Orders (when applicable), Edison specifications, and all governing local ordinances.
   c. Each trench to be a uniform depth below final grade prior to installation of Edison conduit or structures.
   d. Backfill shall be provided by the Contractor for all excavations and shall include crushed rock, concrete, and/or imported backfill, when required.
   e. Backfill with a MINIMUM of one sack per yard sand cement slurry around and over vaults and manholes per UGS GI 030, section 6.4 and around PMH's within one foot of finished grade, per UGS SS 590.1.
   f. Backfill, per Edison specifications, shall immediately follow conduit or substructure installation. At no time shall conduit be left exposed over 24 hours.
   g. No rocks are allowed within 12 inches of direct-buried cables or any conduit without concrete encasement. Native backfill capable of passing through a one-half inch mesh screen shall be considered to be "rock free". If existing backfill does not pass through a 1/2" screen, place imported sand 3" below and 12" above Edison cables. After this point, no rocks larger than 12" diameter are permitted.
   h. All backfill shall be compacted to meet or exceed local ordinances or other requirements. It shall be placed in a manner that will not damage the conduit or substructure or allow future subsidence of the trench or structures.

5. PAVING:
   Repaving, where required, shall be placed in such a manner that interference with traffic, including pedestrian traffic, will be kept to a minimum. The Contractor shall establish a program of repaving acceptable to the Municipality, County, or other authority having jurisdiction and which is acceptable to Edison.

6. STRUCTURES:
   a. All substructures shall be constructed or installed to Edison specifications.
   b. Install protection barriers per UGS MS 830 when required in areas exposed to traffic, per Edison Inspector.
   c. All conduit lines and concrete floored substructures shall be water tight.
   d. All grounding materials shall be furnished and installed by the Contractor.

7. RETAINING WALLS:
   When required, retaining walls shall be provided by the Developer. Walls are required wherever grade rises more than 18 inches above the structure or 24" above the pad surface at a distance of 5 feet from the same, or in areas subject to erosion. Design and installation must comply with local building ordinances. Refer to Edison Inspector for typical space requirements.

8. PERMITS:
   All permits necessary for excavation shall be provided by the Contractor/Developer.

9. ACCESS:
   Heavy truck access shall be maintained to equipment locations. Structures must be clear of all appurtenances that would obstruct the loading or unloading of equipment.

10. SERVICES:
   a. Meters and services shall comply with Edison Electrical Services Requirements.
   b. Wiring must be in accordance with applicable local ordinances and approved by local Inspection Authorities.

11. LOCATION:
   a. The location of excavations and structures for Edison shall be as shown on the working drawing. No deviation from the planned locations will be permitted unless approved by the Edison Inspector. See UGS GI 001, section 2.2.
   b. Actual location of obstructions, storm drains, and/or other foreign utilities to be the responsibility of the Contractor. See UGS GI 001, section 2.3.

12. Contractor is to verify location and widths of all sidewalks and driveways prior to street light installation. See UGS CD 175.1, UGS CD 175.2 and UGS CD 175.3.

13. SURVEY:
   Surveying of street improvements, property corners, lot lines, finished grade, etc., necessary for the installation of underground facilities must be completed and markers or stakes placed prior to the start of the installation. In addition, Developer shall maintain the markers during the installation and inspection by Edison. Grade and property line stakes must show any offset measurements.

14. COORDINATION AND SUPERVISION:
   The Developer shall provide supervision over and coordination among the various contractors working within the development in order to prevent damage to Edison facilities. He is responsible for the cost of repairs, replacement, relocation, or other corrections to Edison facilities made necessary by his failure to provide supervision or to otherwise comply with these specifications.

15. TELEPHONE AND OTHER UTILITY REQUIREMENTS:
   The drawing prepared for this job may also cover the facilities to be installed for the telephone company and/or other utility. Any questions concerning details of their installation should be referred to the company concerned.

16. OWNERSHIP:
   Developer is to deed to the Edison Company all structures shown hereon except those shown as customer owned.

17. WARRANTY:
   Applicants expressly represent and warrant that all work performed and all material used in meeting Applicants' obligations herein are free from defects in workmanship and are in conformity with Southern California Edison Company's requirements. This warranty shall commence upon receipt by Applicants of Company's final acceptance and shall expire one year from that date. Applicants agree to promptly correct to the Company's satisfaction and that of any governmental agency having jurisdiction and at Applicant's expense any breach of this warranty which may become apparent through inspection or operation of underground electric system by Company during this warranty period.

18. INSPECTION:
   Inspection is required during the construction period. A 48 hour advance notice of intent to start construction is required from the contractor to the Southern California Edison Company. Standards of Edison construction requirements are available upon request.

Duct and Structure Inspector: RON WHITTAKER Phone: 310-710-9606

Cabling Construction Coordinator: Phone:

D05: Rev. 07/21/16

CONNECTING TO EXISTING SCE STRUCTURES

- Per SCE requirements, customers are not allowed to enter, intercept or tie-in to existing SCE facilities; e.g. structures, equipment, multi-conduit runs/banks, or conductors. These facilities may be energized and the work will only be performed by SCE. Contact the appropriate SCE inspector to schedule an appointment. Customers may connect to an existing conduit stub without a SCE inspector present.
- Multi-conduit runs/banks are runs of conduit in close proximity to each other and other SCE facilities. A conduit stub is a single empty conduit stub that is not in close proximity to other SCE owned facilities. Refer to the work order map for details.
- Per CPUC/SCE's Rule 15 B.1.A and Rule 16 D.1.A., the customer will provide all necessary excavations (with the exception of excavation under pads and primary splice boxes), material (including conduit and structures) and encasement, to be utilized in the intercept/tie-in process.
- The customer must adhere to all applicable Cal-OSHA, local, city, state and federal regulations, (including, but not limited to, all necessary shoring and traffic control in place to perform the intercept/tie-in work by SCE's underground civil contractor(s)).
- Intercept/tie-in work must be coordinated with SCE's civil contractors through the Division Inspector/P-Spec to limit exposure of excavation(s). Customer is responsible for securing excavation(s).

D08: 11/13/18

LEGEND OF CONDUIT SYMBOLS
(CONVENTIONAL U. G.)

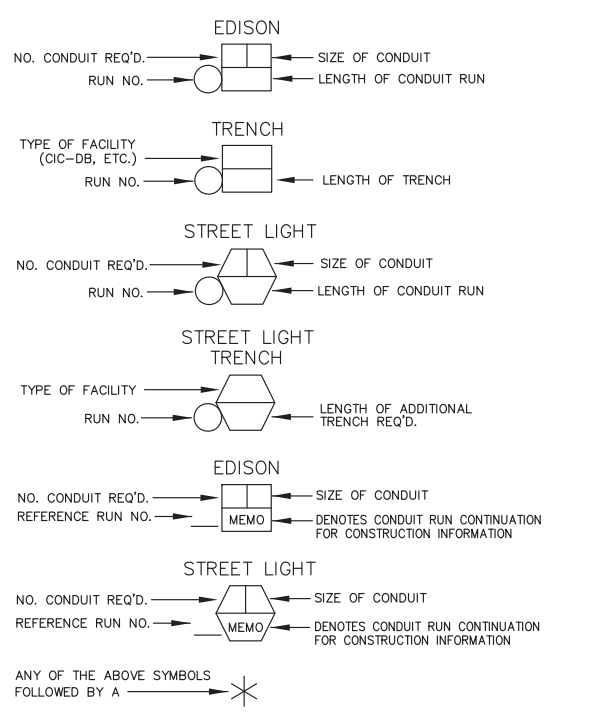

ANY OF THE ABOVE SYMBOLS FOLLOWED BY A ✳

DENOTES THE FOLLOWING:

DB CONDUIT WITHOUT ENCASEMENT IS ACCEPTABLE FOR PORTIONS OF TRENCH WITH ONLY ONE OR TWO CONDUITS

SEMI-ENCASEMENT IS REQUIRED FOR PORTIONS OF TRENCH WITH ONLY THREE OR FOUR CONDUITS

FULL ENCASEMENT IS REQUIRED FOR MORE THAN FOUR CONDUITS

D18: Rev. 5/08/2006

CONCRETE PRODUCTS

Precast concrete item complete with neck. Cover and inserts may be obtained from any of the following listed and approved manufactureres:

JENSEN PRECAST
14221 San Bernardino Ave., Fontana, Calif. 92335
Phone: (909) 350-4111
(800) 257-6100

OLDCASTLE PRECAST
10650 Hemlock Ave., Fontana, Calif. 92337
Phone: (909) 428-3700
(800) 626-3860

FOR HANDHOLE AND PULLBOX MANUFACTURERS, SEE UGS HP 200.

D41: Rev. 01/21/09

LEGEND CODE DEFINITIONS

CI – CUSTOMER CONTRACTOR INSTALLED: MATERIALS FURNISHED AND INSTALLED BY APPLICANT AT EDISON'S EXPENSE AND ARE DEEDED TO EDISON. (EXCEPTION: STREET LIGHT ELECTROLIERS WILL BE INSTALLED BY EDISON'S CONTRACTOR.)

CO – CUSTOMER CONTRACTOR OWNED: MATERIALS FURNISHED. INSTALLED. OWNED. AND MAINTAINED BY APPLICANT.

CF – CUSTOMER CONTRACTOR FURNISHED: MATERIALS FURNISHED AND INSTALLED BY APPLICANT AT APPLICANT'S EXPENSE THAT MAY BE DEEDED TO EDISON.

IN – INSTALL: MATERIALS FURNISHED AND INSTALLED BY APPLICANT IF APPLICANT INSTALLED PROJECT OR BY EDISON IF EDISON INSTALLED PROJECT. (EXCEPTION: FOR AN APPLICANT INSTALLED LINE EXTENSION. STATION NOS.______
HAVING AN ASTERISK ADJACENT TO AN "IN" LEGEND CODE REPRESENTS MATERIALS TO BE PROVIDED BY APPLICANT AND INSTALLED BY EDISON IN ALL CASES. REFER TO DPB 8258. PROJECT MATERIAL LIST BY ASSEMBLY WITHIN A STATION.)

MI – MEMO INSTALL: SAME AS IN-INSTALL.

MR – MEMO REMOVE: MATERIALS REMOVED BY EDISON.

RM – MEMO REMOVED: MATERIALS REMOVED BY EDISON.

SI – SHOOFLY IN: MATERIALS FURNISHED AND INSTALLED BY EDISON FOR TEMPORARY CONSTRUCTION.

SR – SHOOFLY REMOVE: MATERIALS REMOVED BY EDISON FOR TEMPORARY CONSTRUCTION.

TR – TRANSFER: EDISON LABOR REQUIRED TO TRANSFER EXISTING FACILITIES.

D31: Rev. 11/85

RUN NUMBER CALL-OUTS AS FOLLOWS:

(1) – (199) MAINLINE CONDUIT
(200) – (599) SERVICE CONDUIT
(600) – (799) STREET LIGHT CONDUIT

D84: Rev. 10/26/20

CONDUIT RADIUS REQUIREMENTS:

A: The minimum radius for bends are:
36" for conduits 3" in diameter or smaller
48" for conduits 4" and 5" in diameter
60" for 6" diameter conduit

B: The minimum radius for sweeps are:
36" for conduits 3" in diameter or smaller
12'-6" for conduits 4" in diameter and larger, unless otherwise noted.

FOR PLASTIC PRODUCTS:

Plastic structures shown on this drawing are available from one or more of the following companies

Armorcast Products Co.
13230 Saticoy Street
North Hollywood, CA 91605
(818) 982-3600

Carson Industries, Inc.
1925 "A" Street
La Verne, CA 91750
(909) 596-1988

Associated Plastics, Inc.
2626 Kansas Avenue
Riverside, CA 92507
(909) 787-0600

CDR Systems Corp.
533 N. Nova Road, Suite 208
Ormond Beach, FL 32174
(800) 929-8207

Brooks Products, Inc.
1850 Parco Avenue
Ontario, CA 91761
(909) 947-7470

Quazite Corp.
615 North King Road
San Jose, CA 95133
(408) 923-5333 / (310) 225-5500

D130: Rev. 11/10/20

LEGEND OF DRAFTING SYMBOLS

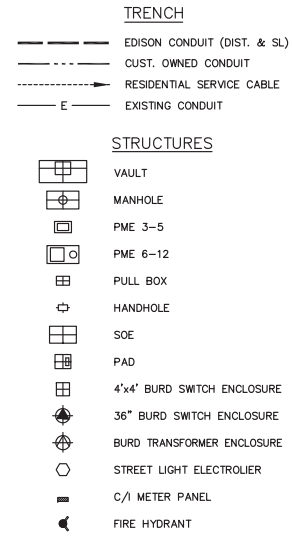

D128: Rev. 11/10/20

PAD FOR SURFACE-MOUNTED TRANSFORMER
SEE UGS SS 504

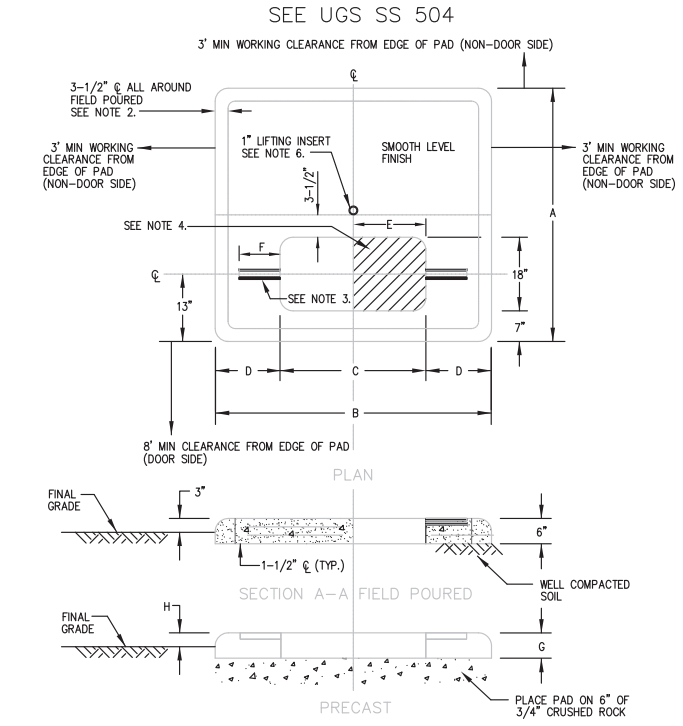

TABLE SS 504-1: Surface-Mounted Transformer Pads-Dimensions

Transformer	Pad Dimensions (in)								Weight (lb)	SAP
	A	B	C	D	E	F	G	H		
1ø 25 KVA-167 KVA 3ø	54	48	26	11	12	6	4	2	750	10118012
3ø 75 KVA-500 KVA SW and Fuse	72	94	50	22	22	14	6	3	3,200	10118013

Note(s):
1. Concrete to be 3,000 psi (minimum) at 28 days.
2. Reinforcing steel to be No. 4 bars installed in a double net. Perimeter bars to be continuous (8" minimum lap or weld).
3. Hold-down brackets to be P-3200 series unistrut (or equal).
4. Primary cables must be installed in shaded area of drawing above as far to the right as possible on single phase transformers only. On three-phase transformers primary cables must be installed in the unshaded area of drawing above as far left as possible.
5. See AC 701 for pad-mounted transformer/capacitor grounding requirements and AC 703 for approved grounding materials.
6. 1-inch listing insert to be located at center of gravity on precast pads.
7. See SS 500 for approved manufacturers.
8. The three-phase transformer shall only be used on a pad when four or fewer services are to be installed. A slab box should be used when more than four services will be installed.
9. Use a thin layer of redi-crete (or equivalent) for rodent and weed control or where transformer does not fully cover opening in pad.
10. A 17" x 30" x 15" plastic handhole (SAP 10117726) shall be inverted and installed under the cable opening of the pad. This will provide adequate cable slack for operation of the load-break elbows on single phase transformers only.

D43: Rev. 10/26/20

PANEL CLEARANCE
UNDERGROUND SERVICE CONNECTIONS 0-600 VOLTS
SEE ESR 3-16

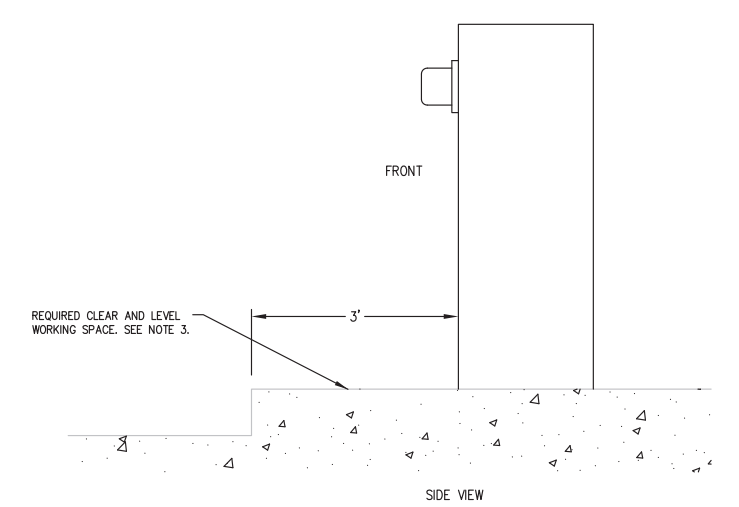

NOTES:
1. A MINIMUM OF THREE (3) FEET OF CLEAR, LEVEL WORK SPACE IS REQUIRED IN FRONT OF ALL TERMINATION, METERING, AND SERVICE EQUIPMENT.
2. SEE ESR-5 FOR METER-MOUNTING HEIGHT REQUIREMENTS. METER MOUNTING HEIGHT WILL BE MEASURED FROM THE STANDING AND WORKING SPACE TO THE CENTERLINE OF THE METER(S).
3. WHEN SERVICE EQUIPMENT IS INSTALLED ON AN ELEVATED PORTION OF THE FLOOR/GROUND, OR HOUSEKEEPING PAD, THE PAD SHALL BE FLUSH WITH AND EXTEND A MINIMUM OF THREE (3) FEET. THIS IS MEASURED FROM THE FRONT OF THE SERVICE EQUIPMENT OR THE OUTER DOOR(S) OF THE SWITCHBOARD NEMA 3R ENCLOSURE WHEN INSTALLED. IN NO CASE SHALL THE MAXIMUM METER HEIGHT OF SIX (6) FEET THREE (3) INCHES BE EXCEEDED.
4. TO MAINTAIN A SAFE, CLEAR, AND LEVEL WORKING AREA IN FRONT OF NEW OR EXISTING METER AND SERVICE EQUIPMENT, A CONCRETE SLAB OR OTHER SUITABLE PERMANENT HARD SURFACE, ACCEPTABLE TO THE COMPANY, MUST BE USED.
5. FOR SWITCHBOARDS ABOVE 600V, FIVE-FOOT MINIMUM OF CLEAR AND LEVEL STANDING AND WORKING SPACE IS REQUIRED IN THE FRONT, REAR, AND SIDE OF ANY SECTION WHERE SUCH PART SUPPORTS OR PROVIDES ACCESS TO METERING, TESTING EQUIPMENT, OR SERVICE CABLE TERMINATION SECTIONS.

16.12 PROTECTIVE BARRIERS FOR SERVICE EQUIPMENT

BARRIER POSTS ARE USED TO PROTECT THE METER AND SERVICE EQUIPMENT, AS WELL AS PERSONNEL, FROM VEHICULAR CONTACT, AND TO PROHIBIT ENCROACHMENT INTO THE WORKING SPACE. (FOR EXAMPLE: LOADING ZONES, DRIVEWAYS, CONGESTED AREAS, OFF STREET PARKING, AND SO ON). THE CUSTOMER SHALL PROVIDE AND INSTALL "NON-REMOVABLE" BARRIERS TO PROVIDE THE PROPER SAFE WORKING CLEARANCES WHERE THE WORKSPACE IS EXPOSED TO VEHICULAR OR OTHER HAZARDOUS CONDITIONS. METERS WILL NOT BE SET UNTIL THE BARRIERS HAVE BEEN INSTALLED.

D99: 10/26/20

TYPICAL CONDUIT SECTION JOINT WITH CATV & TELE
SEE UGS CD 120

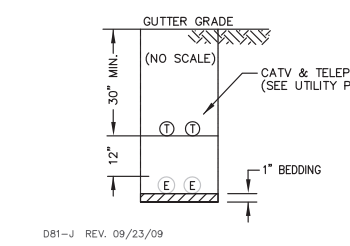

D81-J REV. 09/23/09

NOTE:
ALL ELECTRICAL DUCTS AND STRUCTURES WILL CONFORM TO GENERAL ORDER #128 (RULES FOR CONSTRUCTION OF UNDERGROUND ELECTRICAL SUPPLY AND COMMUNICATION PRESCRIBED BY THE PUBLIC UTILITIES COMMISSION OF THE STATE OF CALIFORNIA, JANUARY 2006).

TIE-IN MADE INTO A SECONDARY HANDHOLE

If PVC conduit is used, riser bend installation may be made by the customer with prior SCE approval. Customer not to remove handhole cover. If metallic conduit is used or handhole cover needs to be removed, a SCE Qualified Person must be present.

PULL BOX 3' X 5' PRECAST CONCRETE
SEE UGS HP 225

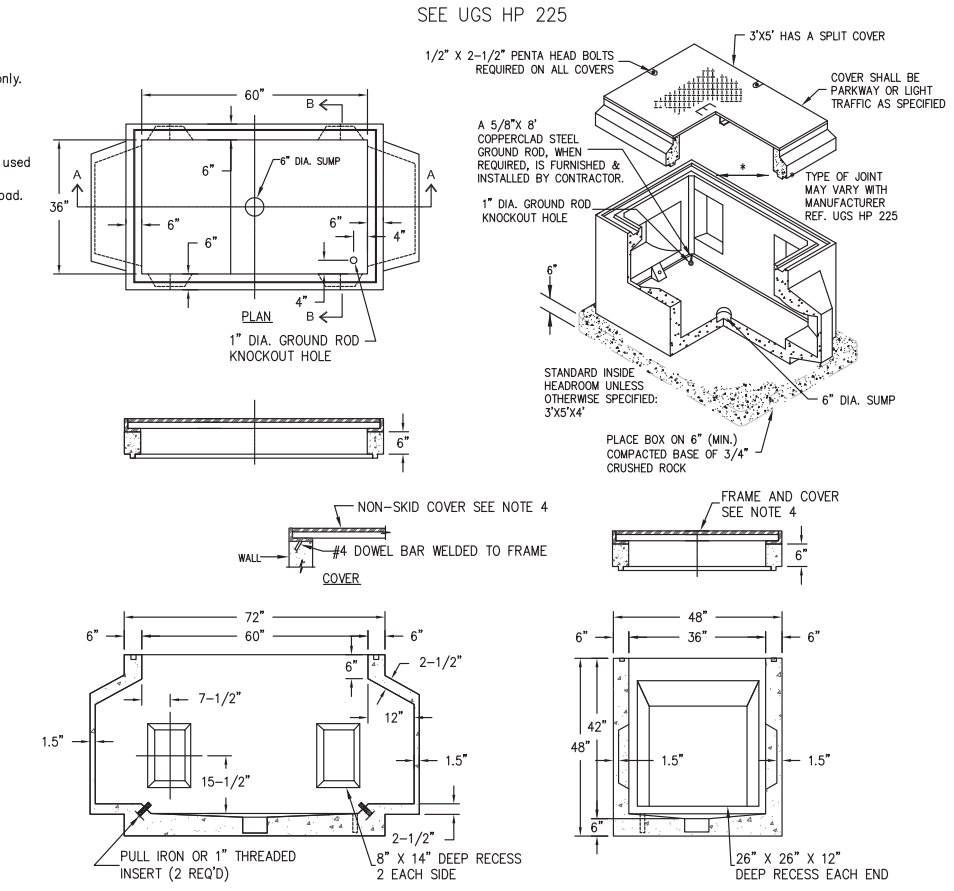

NOTE(S):
1. REINFORCEMENT:
   H20-S BRIDGE LOADING.
2. CONCRETE:
   CONCRETE SHALL BE CLASS "A" WITH 28-DAY COMPRESSIVE STRENGTH OF 3,000 PSI (MINIMUM). SLIGHT TAPER (3/4" IN DEPTH OF PULL BOX) AND 1" CHAMFER ON ALL INSIDE CORNERS PERMITTED FOR EASE OF FORMING.
3. INSTALLATION:
   PULL BOX SHALL BE PLACED ON 6" (MINIMUM) COMPACTED ROCK OR SAND BASE TO ENSURE UNIFORM DISTRIBUTION OF SOIL PRESSURE IN FLOOR. MINIMUM EXCAVATION FOR PULL BOX SHALL BE 52" X 97" X DEPTH TO SUIT JOB.
4. COVERS:
   SEE FC 612 AND FC 618 FOR PULL BOX COVERS.
5. GRADE RINGS:
   INSTALLING CONTRACTOR SHALL PROVIDE GRADE RINGS (6" MINIMUM) AS NECESSARY IN ORDER TO MAINTAIN COVER OVER CONDUITS PER SCE SPECIFICATIONS OR PERMIT AGENCY SPECIFICATIONS, WHICHEVER IS GREATER.
6. PULL IRONS AND EYES:
   SEE AC 729 OR PULL IRONS AND AC 720 FOR PULL EYES.

D53C: Rev. 02/12/21

DISTRICT 44 – SOUTH BAY	PROJ. MGR. REMIJIO, JOSHUA M PHONE 562-756-3241	PLANNER REMIJIO, JOSHUA M PHONE 562-756-3241	DESIGNER ELLIS, CASSANDRA D
PROJECT NO. 2653032 / SERVICE REQUEST 3540168	MSR NO.	PRODUCT-1 2136115-NEW METER & SERVICE	ASSOC DESGN
CIRCUIT / VOLTAGE COPRA 4KV	GPS	PRODUCT-2	ASSOC DESGN
SUB / PG NO. MONETA	CIRCUIT CODE	PRODUCT-3	ASSOC DESGN
INVENTORY MAP 043-068A	J.P.A. NO.	PROPOSED CONSTRUCTION (LOCATION) NEW SERVICE 400A – 277/480A – 3P – 4W 1654 W 160TH ST GARDENA CA 90247	

TYPE	DATE	APPROVED BY	CHECKED BY	DRAWN BY	PAX #
F	6/13/2023	MICHAEL GLENN	JOSHUA REMIJIO	C ELLIS	33308

SHEET 2 OF 2 — DESIGN\DRWG NO. 1629466_1.01

Southern California Edison Company

FILE NAME:1629466_1.01.DWG SAVE DATE:6/29/2023 12:16 PM SAVED BY:CHINE1

Charter Inspector
Jose Ortiz | Construction Coordinator | (310) 429-3459
1529 Valley Dr. | Hermosa Beach, Ca 90254

Place 1-3" conduit from vault being placed under relocation to customer MPOE

CHARTER PRELIMINARY
RECOMMENDATIONS FOR:
GARDENA COMMUNITY
AQUATICS AND SENIOR CENTER
PROJECT
1654 W 160TH ST. GARDENA, CA

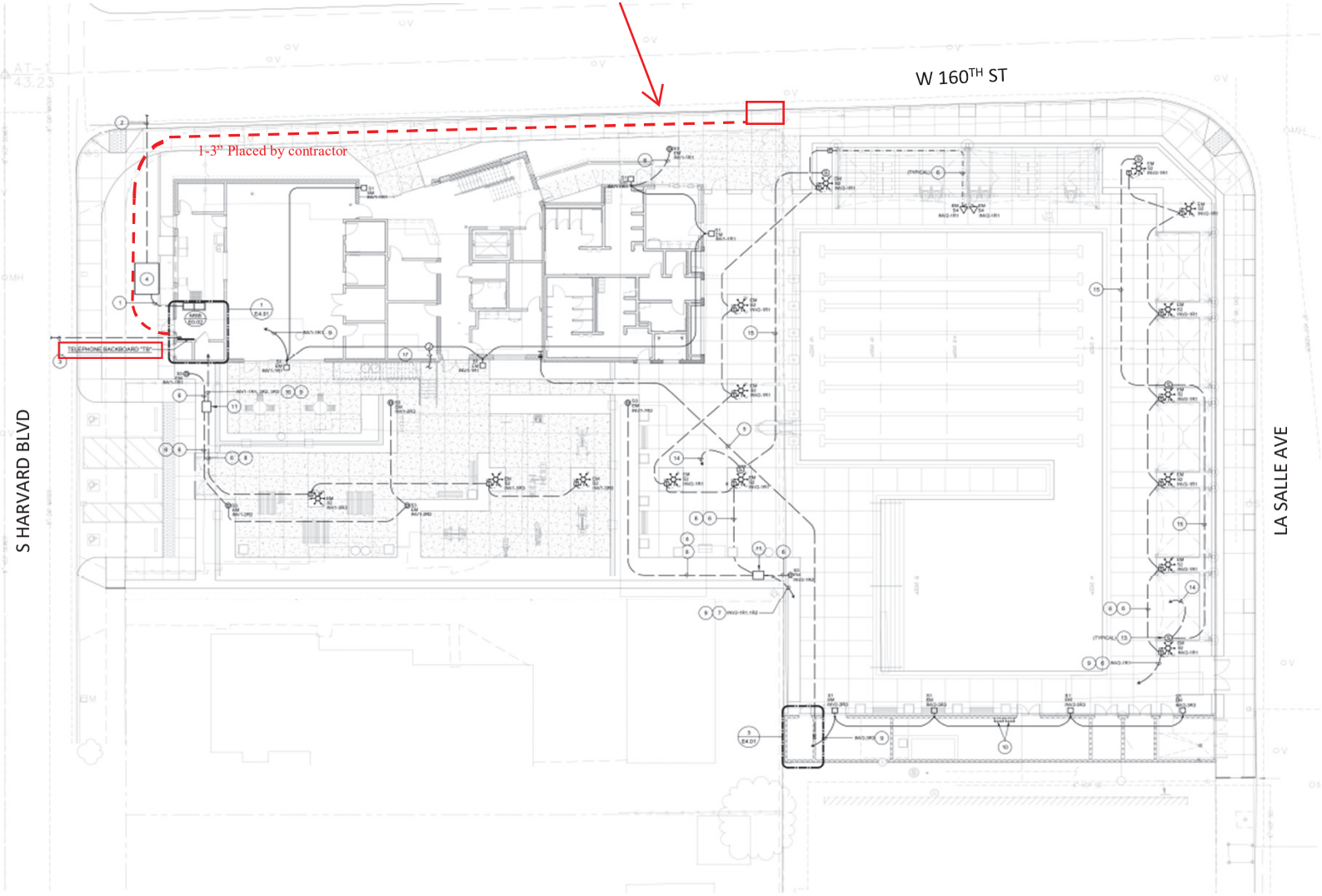

PRELIMINARY RECOMMENDATIONS FOR:
GARDENA COMMUNITY AQUATICS AND
SENIOR CENTER PROJECT
1654 W 160TH ST. GARDENA, CA

NOT TO SCALE
DRAWN BY: CC1648

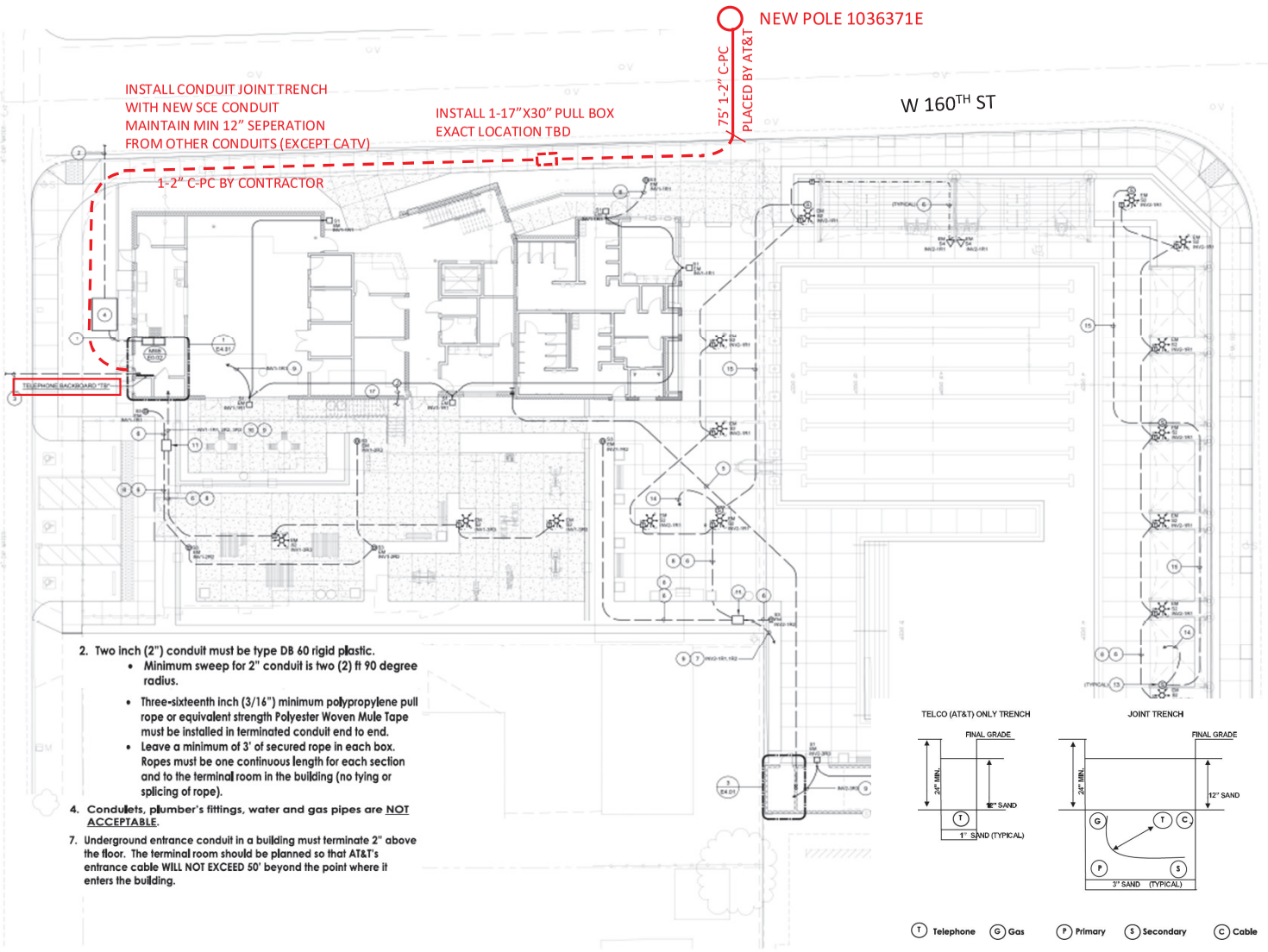

2. Two inch (2") conduit must be type DB 60 rigid plastic.
   - Minimum sweep for 2" conduit is two (2) ft 90 degree radius.
   - Three-sixteenth inch (3/16") minimum polypropylene pull rope or equivalent strength Polyester Woven Mule Tape must be installed in terminated conduit end to end.
   - Leave a minimum of 3' of secured rope in each box. Ropes must be one continuous length for each section and to the terminal room in the building (no tying or splicing of rope).
4. Conduits, plumber's fittings, water and gas pipes are NOT ACCEPTABLE.
7. Underground entrance conduit in a building must terminate 2" above the floor. The terminal room should be planned so that AT&T's entrance cable WILL NOT EXCEED 50' beyond the point where it enters the building.

Material Specifications

All pull boxes, splice boxes and manholes placed by the developer that will be owned and maintained by the property owner must be approved for use by AT&T. The developer may purchase from any manufacturer that meets AT&T's specifications for boxes and manholes, and must include the appropriate racking, sump, bolt down cover, and pulling eyes. Boxes and manholes owned by the property owner must have a generic telephone emblem on the lid. The use of AT&T's name or logo is not permitted on a property owner's boxes and manholes.

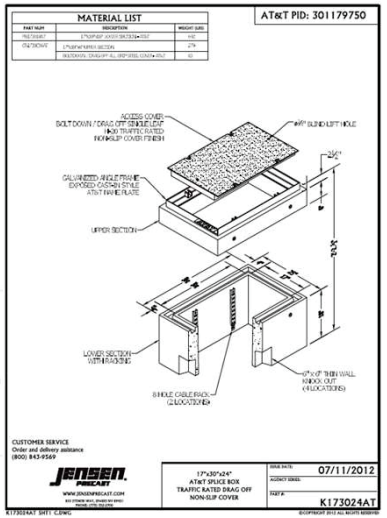

APPENDIX E

DRY UTILITY (SCE, ATT, SPECTRUM) AS-BUILT PLANS

CITY OF GARDENA

PLANS FOR

2QS-RULE 20C, UNDERGROUND UTILITY CONSTRUCTION FOR SCE, ATT, AND CHARTER COMMUNICATION

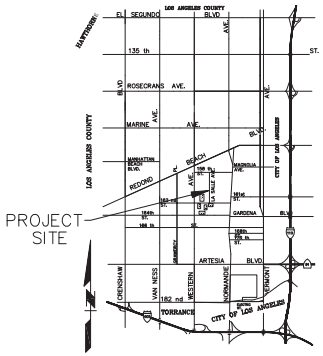

VICINITY MAP
N.T.S.

GARDENA COMMUNITY AQUATIC CENTER
1654 W. 160TH STREET
16004 S. HARVARD BLVD.
16010 HARVARD BLVD.

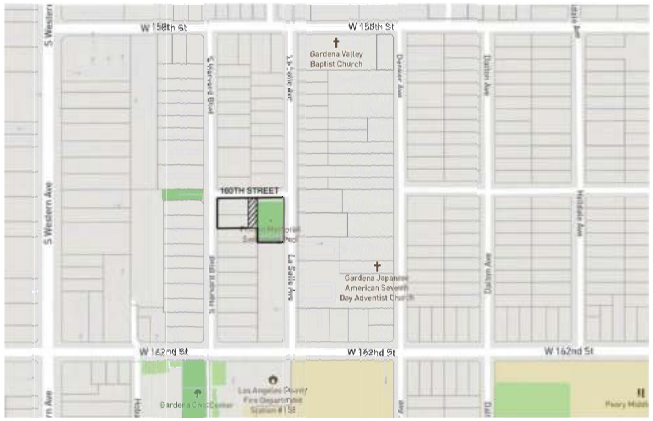

LOCATION MAP
N.T.S.

GARDENA COMMUNITY AQUATIC & SENIOR CENTER PROJECT, JN 978

GENERAL NOTES:

1. THE CONTRACTOR SHALL VERIFY ALL DIMENSIONS AND CONDITIONS BEFORE STARTING WORK.
2. THE ENGINEER DOES NOT WARRANT THE ACCURACY OF SCALED DIMENSIONS ON ANY PLAN. ALL DIMENSIONS SHALL BE AS DESIGNATED ON THE PLANS. THE CONTRACTOR SHALL PROTECT ALL PUBLIC AND PRIVATE PROPERTY
3. DURING THE PERFORMANCE OF WORK DONE UNDER THE CONTRACT, THE CONTRACTOR SHALL TAKE THE NECESSARY PRECAUTIONS TO AVOID ANY DAMAGE TO ANY STRUCTURES ADJACENT TO THE PROJECT BOUNDARIES.
4. EXISTING UTILITIES SHOWN ARE BASED ON AVAILABLE RECORDS OF PARENT UTILITY COMPANIES AND MAY NOT ACCURATELY REPRESENT THEIR ACTUAL LOCATIONS. PRIOR TO BEGINNING ANY CONSTRUCTION, THE CONTRACTOR SHALL VERIFY THE ACTUAL LOCATIONS (VERTICAL AND HORIZONTAL) OF ALL UTILITIES, IN THE FIELD OR COORDINATE SUCH INDEPENDENT VERIFICATION WITH THE PARENT UTILITY COMPANIES AND PROVIDE THE CITY WITH THE POTHOLE INFORMATION. THE CONTRACTOR SHALL PROTECT IN PLACE OR COORDINATE WITH PARENT COMPANY FOR THE RELOCATION OF CONFLICTING UTILITIES ENCOUNTERED DURING CONSTRUCTION.
5. ADJUST UTILITY VALVE COVERS, UTILITY BOXES, TRAFFIC SIGNAL BOXES, ETC. TO FINISH GARDE. PAYMENT SHALL BE INCLUDED IN THE APPLICABLE CONSTRUCTION BID ITEM AND REFER TO CONSTRUCTION NOTE AND/OR SPECIFICATIONS.
6. PROVIDE TRAFFIC CONTROL PER TECHNICAL PROVISIONS.
7. ALL SURVEY CENTERLINE TIES AND MONUMENTS THAT ARE DAMAGED OR REMOVED SHALL BE RE-ESTABLISHED. THE SURVEYOR SHALL ALSO ESTABLISH CENTERLINE MONUMENTS AND TIES AT ALL STREET INTERSECTIONS WITHIN THE PROJECT LIMITS WHERE NONE EXISTED PRIOR TO CONSTRUCTION. SEE TECHNICAL PROVISIONS.
8. 24 HOUR NOTICE FOR ALL INSPECTIONS REQUIRED.
9. CONTRACTORS SHALL REMOVE AND DISPOSE OF ALL TRASH AND BROKEN BRANCHES BEFORE AND AFTER PAVING.
10. PRIOR TO CUTTING OF ANY ROOTS, CALL PARKS DIVISION AT (310) 217-9564 FOR APPROVAL.
11. CONTRACTOR SHALL BE RESPONSIBLE FOR COORDINATION, OBTAINING NECESSARY APPLICABLE PERMITS WITH LOCAL AGENCIES AND OTHER OWNERS HAVING JURISDICTION AND PREPARING REQUIRED DOCUMENTATION NECESSARY FOR PERMITTING.
12. PROTECT ALL STORM DRAINS, CATCH BASINS, ETC. WITH SAND BAGS, FABRIC, AND OTHER APPROPRIATE BEST MANAGEMENT PRACTICES.
13. THE CONTRACTOR SHALL NOTIFY UNDERGROUND SERVICE ALERT (USA) AT 1-800-422-4133 TWO WORKING DAYS PRIOR TO ANY EXCAVATION WORK.
14.

UTILITY CONTACT NUMBERS:

COMPANY	CONTACT	TELEPHONE NO.
CITY OF GARDENA P.W. TRAFFIC/ELECTRICAL	JEFF JALOMO	(310) 217-9430
CITY OF GARDENA P.W. SEWER	JOHN SCHERER	(310) 217-9599
METRO. WATER DISTRICT	CIVIL ENG. SUBSTRUCTURE SEC.	(213) 217-7059
L.A. DEPARTMENT OF WATER & POWER	JOSE PORRAS	(213) 367-1049
L.A. SANITATION DISTRICT	JON GANZ	(562) 908-4288
L.A. COUNTY FLOOD CONTROL DISTRICT	DARYLL CHENOWETH	(626) 458-3709
CHEVRON PIPELINE CO.	DAVE ZERLER	(310) 669-4014
CROWN CASTLE	HECTOR AGUILERA	(951) 454-5111
SOUTHERN CALIFORNIA EDISON COMPANY	JOSHUA REMIJIO	(562) 882-2883
SOUTHERN CALIFORNIA GAS COMPANY	SALVADOR GONZALES	(310) 970-4844
GOLDEN STATE WATER CO.	JOSEPH SALCIDO CONDE VENTURA	(310) 660-0320 X101 (310) 701-2500
AT&T/SBC/PACIFIC BELL	RAYMOND DOVE TERENCE LITTLE	(310) 515-4257 (310) 515-4252
TIME WARNER/SPECTRUM	ARTURO FERNANDEZ	(310) 750-9099
CALIFORNIA UNDERGROUND SERVICE ALERT (USA)		(800) 422-4133
FOR UTILITY INSPECTIONS:		
SOUTHERN CALIFORNIA EDISON COMPANY	JESSE CARRASCO	(310) 779-3195
AT&T/SBC/PACIFIC BELL	CRAIG CHINEN	(310) 408-4518
CHARTER COMMUNICATIONS	JOSE ORTIZ	(310) 429-3459

SHEET INDEX

SHEET NO.	SHEET DESC.	FILE NO.
1	TITLE	5-2611
2	SOUTHERN CALIFORNIA EDISON	5-2611
3	SOUTHERN CALIFORNIA EDISON	5-2611
4	SOUTHERN CALIFORNIA EDISON	5-2611
5	AT&T	5-2611
6	CHARTER COMMUNICATION	5-2611

As Built

DIGALERT
DIAL TOLL FREE
1-800-422-4133
AT LEAST TWO DAYS BEFORE YOU DIG
UNDERGROUND SERVICE ALERT OF SOUTHERN CALIFORNIA

PREPARED BY:

REVISIONS

NO.	DESCRIPTION	DATE	APPROVED

B.M.: _
_

CITY OF GARDENA
DEPARTMENT OF PUBLIC WORKS - ENGINEERING

SHEET TITLE
2QS-RULE 20C, UTILITY UNDERGROUND
TITLE

	INITAL	DATE
DESIGNED BY	-	-
DRAWN BY	-	-
CHECKED BY	-	-

APPROVED BY: Allan Rigg
DATE 1/30/23
DIRECTOR OF PUBLIC WORKS

SHT. 1 OF 6 DWG. NO. 5-2611

FILE PATH: C:\USERS\JESPINOZA\DESKTOP\2QS-RULE 20C UG\PDF SHEETS\COO-TITLE BLOCK_UG_PDF.DWG, PLOT TIME: 1/27/2023 10:00:20 AM

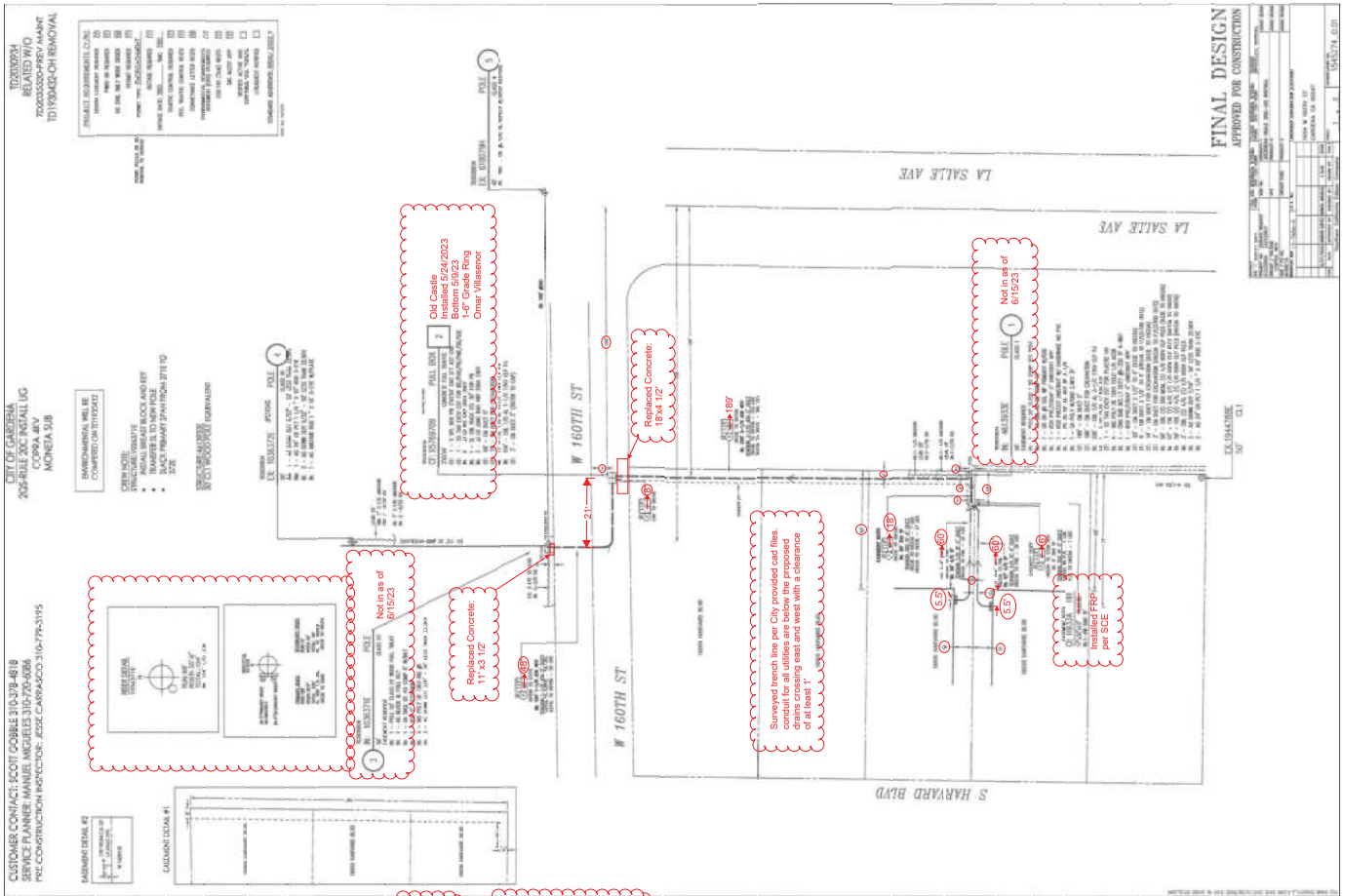

Mandrelled conduit 6/15/23
Signed off by Inspector Aaron Elswick 6/15/23

Installed all utility conduits
to the future pole locations
per City of Gardena
direction with approvals of
all utilities

As Built

SCALE 1" = 30'

DIGALERT
DIAL TOLL FREE
1-800-422-4133
AT LEAST TWO DAYS
BEFORE YOU DIG
UNDERGROUND SERVICE ALERT OF SOUTHERN CALIFORNIA

PREPARED BY:

REVISIONS

NO.	DESCRIPTION	DATE	APPROVED

B.M.: –
–

CITY OF GARDENA
DEPARTMENT OF PUBLIC WORKS - ENGINEERING
SHEET TITLE
2QS-RULE 20C, UTILITY UNDERGROUND
SOUTHERN CALIFORNIA EDISON

	INITAL	DATE
DESIGNED BY	–	–
DRAWN BY	–	–
CHECKED BY	–	–

APPROVED BY: 1/30/23 Allan Rigg
DATE DIRECTOR OF PUBLIC WORKS
SHT. 2 OF 6 DWG. NO. 5-2611

FILE PATH: C:\USERS\JESPINOZA\DESKTOP\2QS-RULE 20C UG\PDF SHEETS\COG-TITLE BLOCK_UG_PDF.DWG, PLOT TIME: 1/27/2023 10:13:40 AM

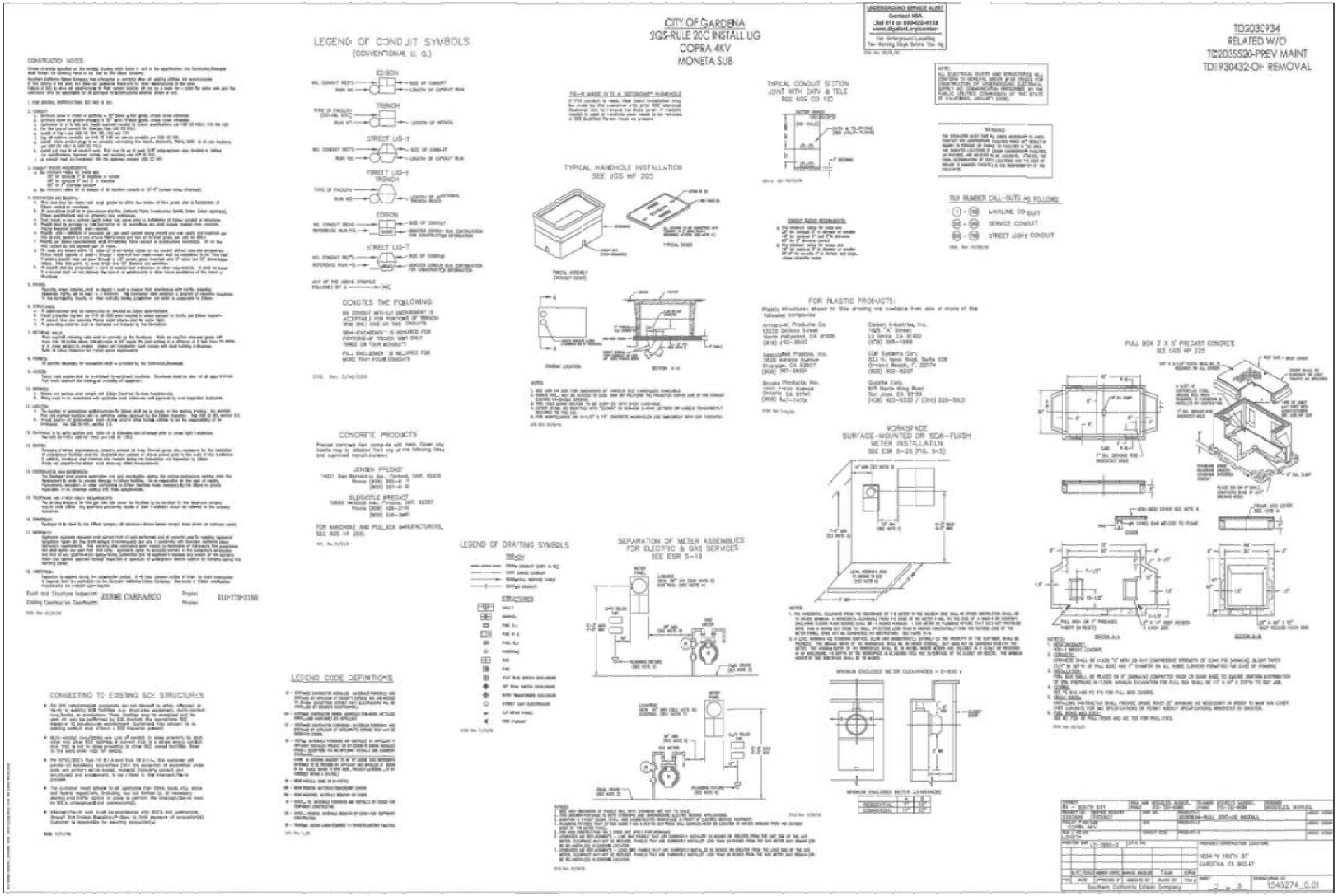
CITY OF GARDENA
2QS-RULE 20C INSTALL UG
COPEA 4KV
MONETA SUB
TD2030Y34
RELATED W/O
TC2035520-PREV MAINT
TD1930432-OH REMOVAL
LEGEND OF CONDUIT SYMBOLS
(CONVENTIONAL U. G.)
CONSTRUCTION NOTES:
TYPICAL HANDHOLE INSTALLATION
SEE UGS HP 205
TYPICAL CONDUIT SECTION
JOINT WITH CATV & TELE
SEE UGS CD 130
CONCRETE PRODUCTS
LEGEND OF DRAFTING SYMBOLS
SEPARATION OF METER ASSEMBLIES
FOR ELECTRIC & GAS SERVICES
SEE ESR 5-19
WORKSPACE
SURFACE-MOUNTED OR SEMI-FLUSH
METER INSTALLATION
SEE ESR 5-25 (FIG. 5-5)
FOR PLASTIC PRODUCTS:
PULL BOX 3 X 5' PRECAST CONCRETE
SEE UGS HP 225
CONNECTING TO EXISTING SCE STRUCTURES
LEGEND CODE DEFINITIONS
RUN NUMBER CALL-OUTS AS FOLLOWS:
1 - 99 LAYLINE CONDUIT
SERVICE CONDUIT
STREET LIGHT CONDUIT
CONCRETE PRODUCTS
Precast concrete item sizing-as will need. Cover the boards may be obtained from any of the following mfrs and approved equivalents:
JENSEN PRECAST
14221 San Bernardino Ave., Fontana, Calif. 92335
Phone: (909) 350-6611
(800) 257-4130
OLDCASTLE PRECAST
10900 Hemlock Ave., Fontana, Calif. 92337
Phone: (909) 428-2155
(800) 626-2660
FOR HANDHOLE AND PULLBOX MANUFACTURER,
SEE UGS HP 205
CONDUIT RISER REQUIREMENTS:
CONDUIT SYSTEM TERMINATIONS
CONDUIT SYSTEM TERMINATIONS
CONDUIT SYSTEM TERMINATIONS

CITY OF GARDENA
2QS-RULE 20C INSTALL UG
COPRA 4KV
MONETA SUB

TD2030934
RELATED W/O
TD2035520-PREV MAINT
TD1930432-OH REMOVAL

EXISTING SINGLE LINE
COPRA 4KV
MONETA SUB

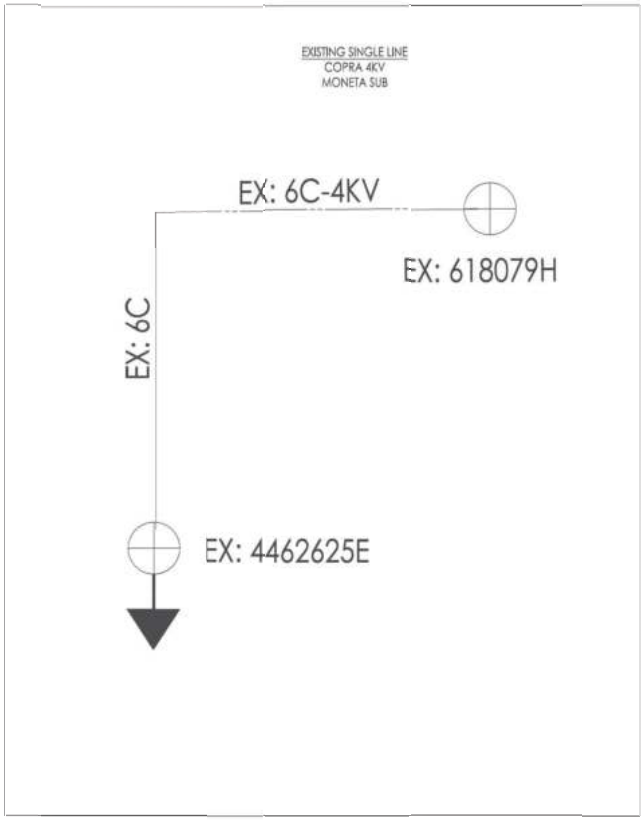

PROPOSED SINGLE LINE
COPRA 4KV
MONETA SUB

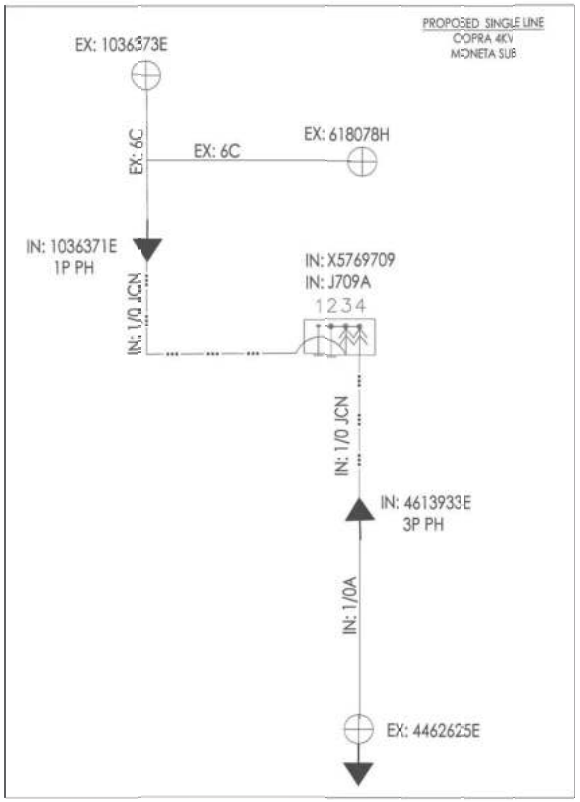

As Built



DIGALERT
DIAL TOLL FREE
1-800-422-4133
AT LEAST TWO DAYS
BEFORE YOU DIG
UNDERGROUND SERVICE ALERT OF SOUTHERN CALIFORNIA

PREPARED BY:

REVISIONS

NO.	DESCRIPTION	DATE	APPROVED

B.M.: _
_

CITY OF GARDENA
DEPARTMENT OF PUBLIC WORKS - ENGINEERING

SHEET TITLE
2QS-RULE 20C, INSTALL UTILITY UNDERGROUND
SOUTHERN CALIFORNIA EDISON

	INITAL	DATE
DESIGNED BY	-	-
DRAWN BY	-	-
CHECKED BY	-	-

APPROVED BY:
1/30/23
DATE
DIRECTOR OF PUBLIC WORKS

SHT. 4 OF 6 DWG. NO. 5-2611

FILE PATH: C:\USERS\JESPINOZA\DESKTOP\2QS-RULE 20C UG\PDF SHEETS\COG-TITLE BLOCK_UG_PDF.DWG, PLOT TIME: 1/27/2023 10:32:00 AM

CITY OF GARDENA AQUATIC & SENIOR CENTER PROJECT
CWO QUOTE WORKSHEET

BILLING INFO:
CITY OF GARDENA
PUBLIC WORKS DEPARTMENT
1717 WEST 162ND STREET
GARDENA, CA 90247-3778

CONTACT INFO:
SCOTT GOBBLE
UTILITY CONSULTANT
(310) 378-4818

AT&T INSPECTION CONTACT:
CRAIG CHINEN
AT&T BIC ENGINEER
(310) 408-4518
CC1648@ATT.COM

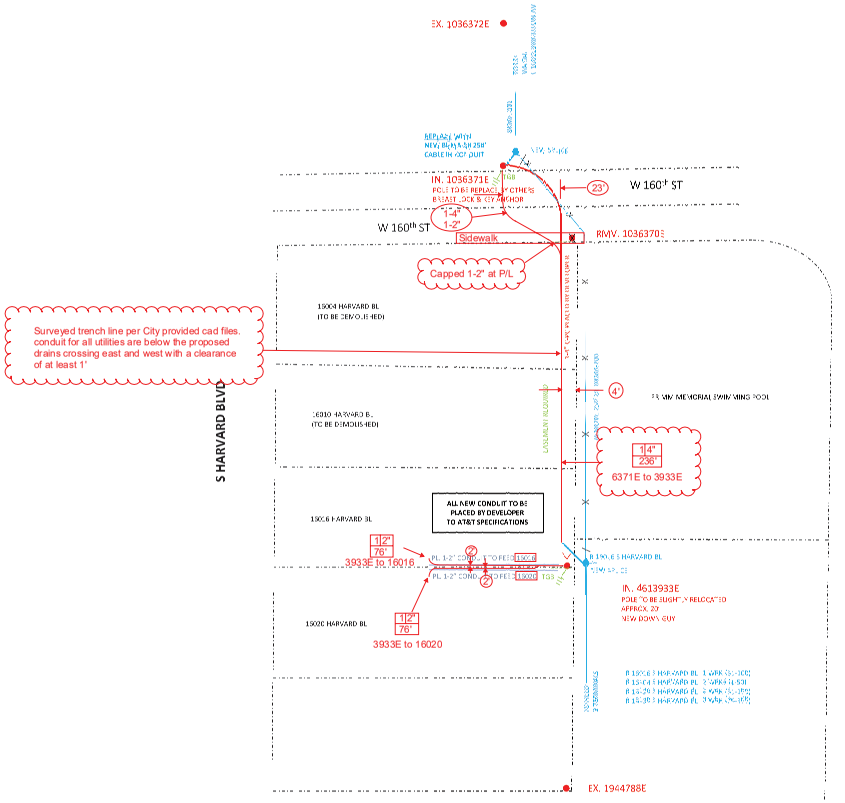

Surveyed trench line per City provided cad files. conduit for all utilities are below the proposed drains crossing east and west with a clearance of at least 1'

Mandrelled conduit 6/14/23
Signed off by Inspector Craig Chinen 6/14/23

Installed all utility conduits to the future pole locations per City of Gardena direction with approvals of all utilities

As Built

SCALE 1" = 30'

DIGALERT
DIAL TOLL FREE
1-800-422-4133
AT LEAST TWO DAYS BEFORE YOU DIG
UNDERGROUND SERVICE ALERT OF SOUTHERN CALIFORNIA

PREPARED BY:

REVISIONS

NO.	DESCRIPTION	DATE	APPROVED

B.M.: _
_

CITY OF GARDENA
DEPARTMENT OF PUBLIC WORKS - ENGINEERING

SHEET TITLE
2QS-RULE 20C, UTILITY UNDERGROUND
AT&T

	INITAL	DATE	APPROVED BY:
DESIGNED BY	-	-	1/30/23 Allan Rigg
DRAWN BY	-	-	DATE DIRECTOR OF PUBLIC WORKS
CHECKED BY	-	-	SHT. 5 OF 6 DWG. NO. 5-2611

FILE PATH: C:\USERS\JESPINOZA\DESKTOP\2QS-RULE 20C UG\PDF SHEETS\COG-TITLE BLOCK_UG_PDF.DWG PLOT TIME: 1/27/2023 10:35:05 AM

CHARTER APPROVED REDLINE

Inspector
Jose Ortiz | Construction Coordinator | (310) 429-3459
1529 Valley Dr. | Hermosa Beach, Ca 90254

CITY OF GARDENA AQUATIC & SENIOR CENTER PROJECT
CWO QUOTE WORKSHEET
BILLING INFO:
CITY OF GARDENA
PUBLIC WORKS DEPARTMENT
1717 WEST 162ND STREET
GARDENA, CA 90247-3778

CONTACT INFO:
SCOTT GOBBLE
UTILITY CONSULTANT
(310) 378-4818

SCOPE OF WORK:

DOWNSIZE AND REPLACE EXISTING COPPER CABLE IN TO UNDERGROUND CONDUIT TO BE PLACED BY THE CUSTOMER. REMOVE EXISTING POLE. PLACE NEW DOWN GUY ON AN ADJACENT POLE. OBTAIN JPA AND EASEMENT FOR NEW CONDUIT.

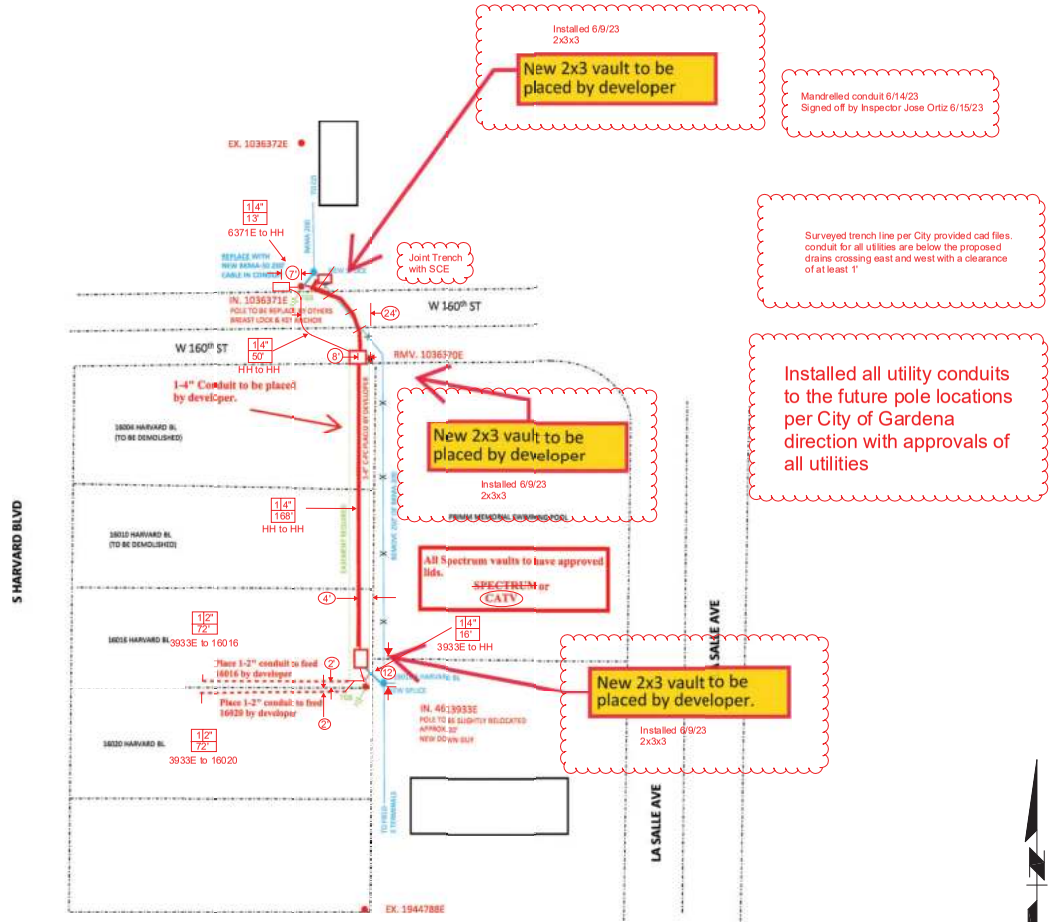

As Built

SCALE 1" = 30'

DIGALERT
DIAL TOLL FREE
1-800-422-4133
AT LEAST TWO DAYS BEFORE YOU DIG
UNDERGROUND SERVICE ALERT OF SOUTHERN CALIFORNIA

PREPARED BY:

REVISIONS

NO.	DESCRIPTION	DATE	APPROVED

B.M.: –
–

CITY OF GARDENA
DEPARTMENT OF PUBLIC WORKS - ENGINEERING

SHEET TITLE
2QS-RULE 20C, UTILITY UNDERGROUND
CHARTER COMMUNICATION

	INITIAL	DATE
DESIGNED BY	–	–
DRAWN BY	–	–
CHECKED BY	–	–

APPROVED BY: Allan Rigg
DATE 1/30/23
DIRECTOR OF PUBLIC WORKS
SHT. 6 OF 6
DWG. NO. 5-2611

FILE PATH: C:\USERS\JESPINOZA\DESKTOP\2QS-RULE 20C UG\PDF SHEETS\CDG-TITLE BLOCK_UG_PDF.DWG, PLOT TIME: 1/27/2023 10:43:56 AM

APPENDIX F

AQUATIC & SENIOR CENTER SITE DEMO AS-BUILT PLANS

AS-BUILT DWGS

CITY OF GARDENA
DEMOLITION PLANS
FOR
GARDENA COMMUNITY AQUATIC AND SENIOR CENTER PROJECT - DEMOLITION PHASE
JOB NUMBER - J.N. 978

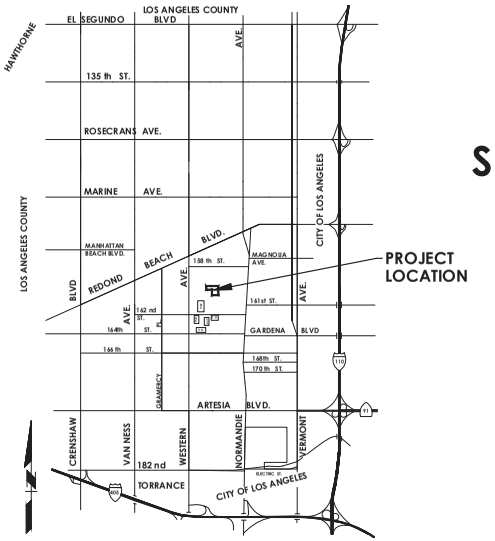

VICINITY MAP
N.T.S.

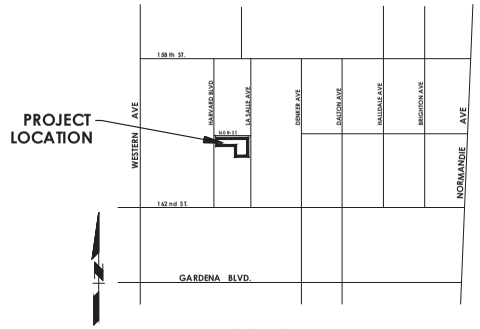

LOCATION MAP
N.T.S.

SHEET INDEX

SHEET NO.	SHEET DESC.	FILE NO.
1	TITLE SHEET	L-1.01
2	DEMOLITION PLAN	D-1.01
3	DEMOLITION PLAN ADDITIONAL NOTES	D-1.02
4	ROUGH GRADING PLAN	D-1.03

PROJECT DIRECTORY:

COMPANY	CONTACT	TELEPHONE NO.
CIVTEC	TOM CARCELLI	(949) 463-8822
RJM DESIGN GROUP	ERIC CHASTAIN	(949) 493-2600

UTILITY CONTACT NUMBERS:

COMPANY	CONTACT	TELEPHONE NO.
CITY OF GARDENA P.W. TRAFFIC/ELECTRICAL	JEFF JALOMO	(310) 217-9430
CITY OF GARDENA P.W. SEWER	JOHN SCHERER	(310) 217-9599
METRO. WATER DISTRICT	MARYLIN DUARTE	(213) 217-7059
L.A. DEPARTMENT OF WATER & POWER	JOSE PORRAS	(213) 367-1049
L.A. SANITATION DISTRICT	JON GANZ	(562) 908-4288
L.A. COUNTY FLOOD CONTROL DISTRICT	DARYLL CHENOWETH	(626) 458-3709
CHEVRON PIPELINE CO.	DAVE ZERLER	(310) 669-4014
CROWN CASTLE	HECTOR AGUILERA	(951) 454-5111
SOUTHERN CALIFORNIA EDISON COMPANY	CYNTHIA CARRILLO	(310) 413-6497
SOUTHERN CALIFORNIA GAS COMPANY	SALVADOR GONZALES	(310) 970-4844
GOLDEN STATE WATER CO.	JOSEPH SALICIDO CONDE VENTURA	(310) 660-0320 X101 (310) 701-2500
AT&T/SBC/PACIFIC BELL	RAYMOND DOVE	(310) 515-4257
TIME WARNER/SPECTRUM	ARTURO FERNANDEZ	(310) 750-9099
CALIFORNIA UNDERGROUND SERVICE ALERT (USA)		(800) 422-4133

GENERAL NOTES:

1. THE CONTRACTOR SHALL VERIFY ALL DIMENSIONS AND CONDITIONS BEFORE STARTING WORK.
2. THE ENGINEER DOES NOT WARRANT THE ACCURACY OF SCALED DIMENSIONS ON ANY PLAN. ALL DIMENSIONS SHALL BE AS DESIGNATED ON THE PLANS. THE CONTRACTOR SHALL PROTECT ALL PUBLIC AND PRIVATE PROPERTY
3. DURING THE PERFORMANCE OF WORK DONE UNDER THE CONTRACT. THE CONTRACTOR SHALL TAKE THE NECESSARY PRECAUTIONS TO AVOID ANY DAMAGE TO ANY STRUCTURES ADJACENT TO THE PROJECT BOUNDARIES.
4. EXISTING UTILITIES SHOWN ARE BASED ON AVAILABLE RECORDS OF PARENT UTILITY COMPANIES AND MAY NOT ACCURATELY REPRESENT THEIR ACTUAL LOCATIONS. PRIOR TO BEGINNING ANY CONSTRUCTION, THE CONTRACTOR SHALL VERIFY THE ACTUAL LOCATIONS (VERTICAL AND HORIZONTAL) OF ALL UTILITIES, IN THE FIELD OR COORDINATE SUCH INDEPENDENT VERIFICATION WITH THE PARENT UTILITY COMPANIES AND PROVIDE THE CITY WITH THE POTHOLE INFORMATION. THE CONTRACTOR SHALL PROTECT IN PLACE OR COORDINATE WITH PARENT COMPANY FOR THE RELOCATION OF CONFLICTING UTILITIES ENCOUNTERED DURING CONSTRUCTION.
5. ADJUST UTILITY VALVE COVERS, UTILITY BOXES, TRAFFIC SIGNAL BOXES, ETC. TO FINISH GARDE. PAYMENT SHALL BE INCLUDED IN THE APPLICABLE CONSTRUCTION BID ITEM AND REFER TO CONSTRUCTION NOTE AND/OR SPECIFICATIONS.
6. PROVIDE TRAFFIC CONTROL PER TECHNICAL PROVISIONS.
7. ALL SURVEY CENTERLINE TIES AND MONUMENTS THAT ARE DAMAGED OR REMOVED SHALL BE RE-ESTABLISHED. THE SURVEYOR SHALL ALSO ESTABLISH CENTERLINE MONUMENTS AND TIES AT ALL STREET INTERSECTIONS WITHIN THE PROJECT LIMITS WHERE NONE EXISTED PRIOR TO CONSTRUCTION. SEE TECHNICAL PROVISIONS.
8. 24 HOUR NOTICE FOR ALL INSPECTIONS REQUIRED.
9. CONTRACTORS SHALL REMOVE AND DISPOSE OF ALL TRASH AND BROKEN BRANCHES BEFORE AND AFTER PAVING.
10. PRIOR TO CUTTING OF ANY ROOTS, CALL PARKS DIVISION AT (310) 217-9564 FOR APPROVAL
11. CONTRACTOR SHALL BE RESPONSIBLE FOR COORDINATION, OBTAINING NECESSARY APPLICABLE PERMITS WITH LOCAL AGENCIES AND OTHER OWNERS HAVING JURISDICTION AND PREPARING REQUIRED DOCUMENTATION NECESSARY FOR PERMITTING.
12. PROTECT ALL STORM DRAINS, CATCH BASINS, ETC. WITH SAND BAGS, FABRIC, AND OTHER APPROPRIATE BEST MANAGEMENT PRACTICES.
13. THE CONTRACTOR SHALL NOTIFY UNDERGROUND SERVICE ALERT (USA) AT 1-800-422-4133 TWO WORKING DAYS PRIOR TO ANY EXCAVATION WORK.

REVIEWED FOR CODE COMPLIANCE

USING TITLE 15 OF THE GARDENA MUNICIPAL CODE AND THE FOLLOWING:

- ☐ 2019 CALIFORNIA RESIDENTIAL CODE
- ☑ 2019 CALIFORNIA BUILDING CODE
- ☐ 2019 CALIFORNIA ELECTRICAL CODE
- ☐ 2019 CALIFORNIA PLUMBING CODE
- ☐ 2019 CALIFORNIA MECHANICAL CODE
- ☐ 2019 CALIFORNIA ENERGY CODE
- ☑ 2019 CALIFORNIA GREEN BUILDING STANDARDS CODE
- ☑ 2019 CALIFORNIA BUILDING CODE - STRUCTURAL DESIGN PROVISIONS ONLY
- ☐ 2019 CALIFORNIA FIRE CODE
- ☐ OTHER _____

COMPLETION OF THIS REVIEW DOES NOT AUTHORIZE CONSTRUCTION TO PROCEED IN VIOLATION OF ANY FEDERAL, STATE OR LOCAL REGULATIONS. STAMPED DOCUMENTS SHALL REMAIN ON THE JOB SITE AT ALL TIMES. ALTERATION OF STAMPED DOCUMENTS IS UNLAWFUL.

BY: bpr.mberg DATE: Apr 02, 2022

CITY OF GARDENA

DIGALERT
DIAL TOLL FREE
1-800-422-4133
AT LEAST TWO DAYS BEFORE YOU DIG
UNDERGROUND SERVICE ALERT OF SOUTHERN CALIFORNIA

PREPARED BY:
RJM DESIGN GROUP
31591 Camino Capistrano
San Juan Capistrano, CA 92675
www.RJMdesigngroup.com
(949) 493-2600 (fax)
(949) 493-2600 (phone)

REVISIONS

NO.	DESCRIPTION	DATE	APPROVED

B.M.: THE CITY OF GARDENA BENCHMARK NO. SD-15
ELEV. = 43.908'

CITY OF GARDENA
DEPARTMENT OF PUBLIC WORKS - ENGINEERING

TITLE SHEET
COMMUNITY AQUATICS & SENIOR CENTER
L-1.01

	INITIAL	DATE	APPROVED BY:
DESIGNED BY	EC	03/08/2022	3/8/22
DRAWN BY	TP	03/08/2022	DATE
CHECKED BY	EC	03/08/2022	DIRECTOR OF PUBLIC WORKS

SHT. 1 OF 4 DWG. NO. 5-2606

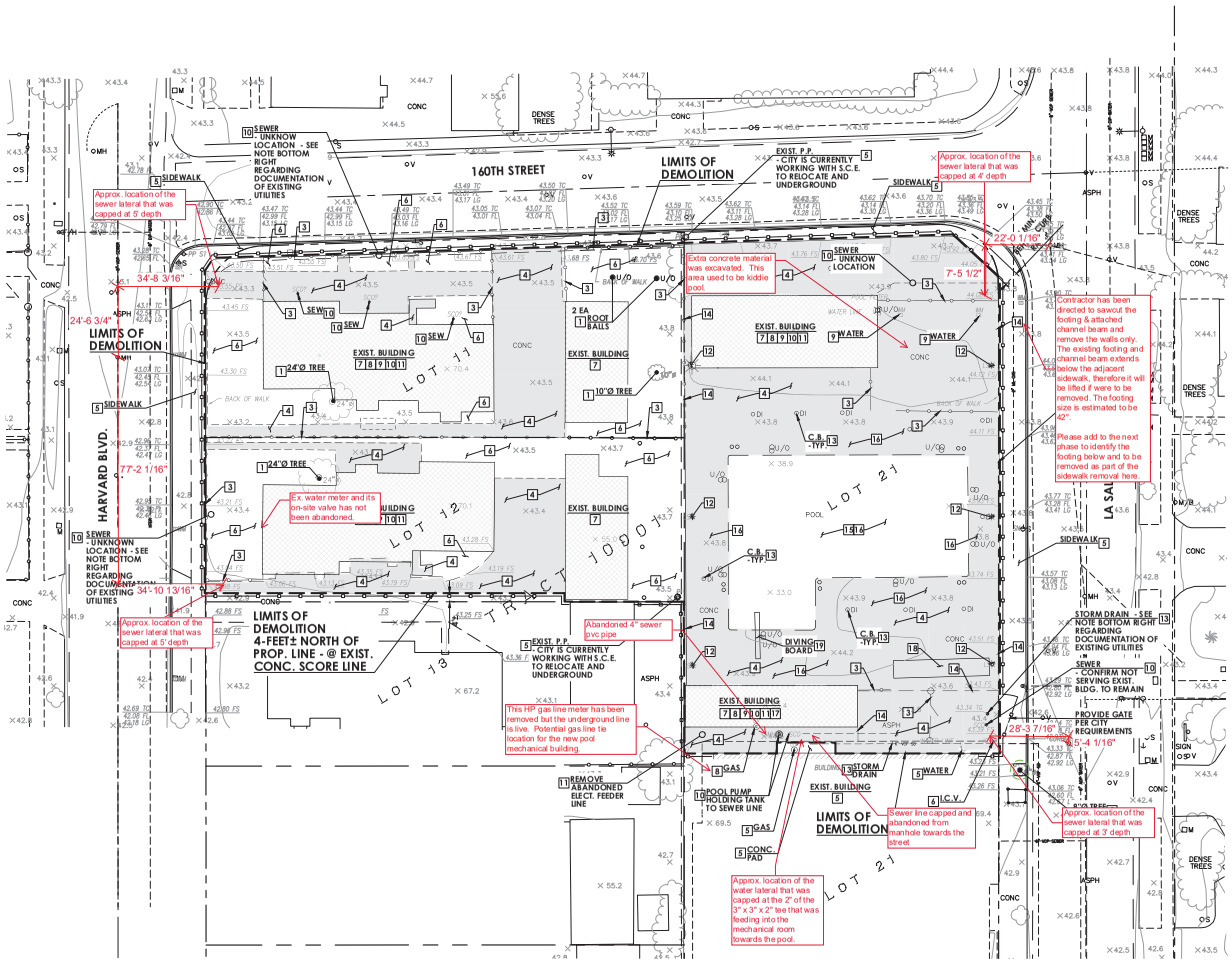

DEMOLITION GENERAL NOTES

SEE SHEET D-1.02 FOR ADDITIONAL NOTES.

DEMOLITION NOTES

1. REMOVE EXISTING TREE AND ROOT BALL AND DISPOSE - CONFIRM DISPOSITION PRIOR TO DEMO. WITH LANDSCAPE ARCHITECT AND CITY
2. NOT USED
3. REMOVE EXIST. FENCE/GATE, ASSOCIATED POSTS, FOOTINGS, ETC. AND DISPOSE
4. SAWCUT AND REMOVE EXISTING CONCRETE CONCRETE, A.C./A.B., STAIRS OR PAD (COMPLETE) AND DISPOSE ****
5. PROTECT IN PLACE - POTHOLE AND LOCATE EXISTING UNDERGROUND UTILITY LINES TO PROTECT AS REQUIRED
6. REMOVE EXISTING LANDSCAPE/IRRIGATION AND CAP AT LIMITS OF DEMOLITION AND DISPOSE **
7. DEMOLISH/REMOVE EXISTING BUILDING/STRUCTURE/FOUNDATION/SUBTERRANEAN PITS AND DISPOSE ****
8. REMOVE EXISTING GAS LINE AND/OR APPURTENANCE - COORD. REMOVAL WITH THE GAS COMPANY
9. REMOVE EXISTING WATER LINE (COMPLETE) AND DISPOSE - CAP EXISTING WATER LINE AT THE METER BOX , CUT & PLUG AND NOTIFY G.S.W.C. - DOCUMENT LOCATION OF EXISTING LINES - SEE ADDITIONAL NOTES THIS SHEET
10. REMOVE EXISTING SEWER LINE (COMPLETE) AND DISPOSE - CAP EXISTING SEWER LINE AT LIMITS OF DEMOLITION AND DOCUMENT LOCATION OF EXISTING LINES - SEE ADDITIONAL NOTES THIS SHEET
11. EXISTING ELECTRICAL/CATV/PHONE VAULT/LINE - SEE ELECTRICAL PLANS FOR CONDUIT RE-ROUTING/CAPPING
12. REMOVE LIGHT POLE, BASE, FOOTING, PULL BOX, CONDUIT AND CONDUCTORS, ETC. (COMPLETE) - SEE ELECTRICAL PLANS FOR CONDUIT RE-ROUTING/CAPPING *
13. REMOVE STORM DRAIN LINE AND/OR CATCH BASIN (COMPLETE) AND DISPOSE - CAP EXISTING STORM DRAIN AT LIMITS OF DEMOLITION AND DOCUMENT LOCATION OF EXISTING LINES - SEE ADDITIONAL NOTES THIS SHEET
14. REMOVE EXISTING WALL AND FOOTING (COMPLETE) AND DISPOSE
15. REMOVE EXISTING POOL (COMPLETE) AS REQUIRED AND DISPOSE
16. REMOVE EXISTING POOL PIPING (COMPLETE) AND DISPOSE
17. REMOVE EXISTING POOL EQUIPMENT/SUBTERRANEAN PIT (COMPLETE) AND DISPOSE ****
18. REMOVE EXISTING BENCH OR BLEACHER (COMPLETE) AND DISPOSE
19. CONFIRM REMOVAL OF EXIST. MISCELLANEOUS ITEM (COMPLETE)

* CONDUIT RE-ROUTING/CAPPING AS REQUIRED

** CAP AND REMOVE IRRIGATION LINES AS REQ'D

*** SEE SOILS REPORT FOR ADDITIONAL DEMOLITION REQUIREMENTS

LEGEND

- LIMITS OF DEMOLITION
- PROTECT UTILITY LINE IN PLACE WITHIN DEMOLITION LIMITS
- 6-FOOT TALL CONSTRUCTION FENCE - LOCATION MAY BE REVISED WITH CITY APPROVAL

NOTE TO CONTRACTOR:

CONTRACTOR TO REFER TO "ASBESTOS CONTAINING MATERIALS AND LEAD-BASED PAINT SURVEY REPORT GARDENA COMMUNITY AQUATIC CENTER" BY CLARK SEIF CLARK, INC., DATED OCTOBER 29, 2021 AND THE CES ENVIRONMENTAL REPORT DATED JANUARY 10, 2020 FOR THE PRIMM POOL FACILITY BLDG AND AUGUST 12, 2021 FOR THE 2-FOURPLEX BUILDINGS AND PERFORM REQUIRED HAZARDOUS MATERIAL REMOVALS IF RECOMMENDED IN THE REPORT PRIOR TO DEMOLITION SHOWN HEREON.

NOTE TO CONTRACTOR: ADDITIONAL REQUIREMENTS:

- THE DEMO CONTRACTOR SHALL MAINTAIN THE EXCAVATION IN COMPLIANCE WITH THE STORMWATER REGULATIONS AND PROVIDE PUMPING AND DESILTING DEVICES WHILE THE UNDER CONTRACT TO THE END OF THE RAINY SEASON, BEING APRIL 1. THE CITY WILL ONLY COVER PUMPING OF THE POOL EXCAVATION AFTER THE DEMO. CONTRACT NOTICE OF COMPLETION IS FILED.
- EROSION CONTROL SHALL COMPLY WITH THE LOS ANGELES COUNTY STORMWATER PERMIT FOR BMP'S AND ALL REQUIRED INSTALLED BMPS FOR THE DURATION OF THE CONTRACT. THE CONTRACTOR SHALL PREPARE A STORM WATER PLAN FOR CITY REVIEW AND APPROVAL PRIOR TO THE START OF CONSTRUCTION TO ENSURE COMPLIANCE WITH THE STORMWATER PERMIT REQUIREMENTS.

NOTE TO CONTRACTOR:

CONTRACTOR TO SCHEDULE A SITE WALK WITH THE CITY PRIOR TO START OF DEMOLITION TO VERIFY ALL ITEMS TO BE DEMOLISHED.

NOTE TO CONTRACTOR:

AT THE DEMOLITION LIMITS:
CONTRACTOR SHALL DOCUMENT THE SIZE, LOCATION, AND DEPTH OF EXISTING SEWER, WATER, AND DRAIN LINES AND CAP FOR FUTURE CONNECTION. CONTRACTOR TO PROVIDE WRITTEN DOCUMENTATION TO THE CITY AND ENGINEER ONCE UTILITY DEMOLITION WORK IS COMPLETE.

REVIEWED
FOR
CODE COMPLIANCE
Apr 02, 2022
CITY OF GARDENA

NOTE TO CONTRACTOR:

ALL UTILITIES SHOULD BE SHUT OFF AND CAPPED PER UTILITY COMPANY REQUIREMENTS. CONTRACTOR SHALL COORDINATE WITH APPROPRIATE UTILITY COMPANY PRIOR TO COMMENCEMENT OF WORK.

NOTE TO CONTRACTOR:

INSTALL 6-FOOT CHAIN LINK FENCE WITH WINDSCREEN AND GATES, WHERE NECESSARY, ALONG THE PERIMETER OF THE SITE AS NEEDED. CONTRACTOR SHALL PROTECT THESE FENCES AND KEEP AREA FULLY SECURE DURING DEMOLITION. PROJECT FENCE, GATE, PRIVATE SCREEN, PERIMETER WATER POLLUTION CONTROL SHALL BECOME THE PROPERTY OF THE CITY AND SHALL REMAIN IN PLACE AT THE COMPLETION OF DEMOLITION.

NOTE TO CONTRACTOR:

- LOCATION OF EXISTING FACILITIES SHOWN HEREON ARE BASED ON THE EXISTING TOPOGRAPHIC SURVEY PERFORMED BY civTEC, INC., DATED FEBRUARY, 2021. FIELD OBSERVATION AND A SEARCH OF AVAILABLE RECORDS AND MAY NOT REPRESENT A CTUAL CONDITIONS.
- CONTRACTOR MUST FIELD LOCATE ALL UTILITIES (LOCATION AND DEPTH) WITHIN WORK AREA AS A FIRST ITEM OF WORK AND VERIFY PROPOSED DESIGN IS VALID.
- CONTRACTOR SHALL PROTECT IN PLACE THE UTILITY LINES SHOWN AND ANY OTHER LINES NOT OF RECORD OR NOT SHOWN ON THESE PLANS. CONTRACTOR SHALL BE RESPONSIBLE FOR ANY DAMAGE TO THE EXISTING UTILITY LINES.
- CONTRACTOR TO VERIFY AND INFORM THE CITY OF ANY FACILITIES ENCOUNTERED IN THE FIELD WHICH IS NOT SHOWN ON THIS PLAN, OR DIFFERS IN LOCATION OR SIZE, PRIOR TO REMOVAL.
- THE CITY MAY IDENTIFY AND REMOVE ANY ITEMS THEY WISH TO RETAIN PRIOR TO THE CONTRACTOR MOVE IN.

NOTE TO CONTRACTOR:

EXACT LOCATION OF EXISTING UNDERGROUND STORM DRAIN LINES ON-SITE ARE UNKNOWN. CONTRACTOR SHALL:

- VERIFY LOCATION, SIZE, ELEVATIONS OF EXISTING STORM DRAIN AND VERIFY DESIGN AS A FIRST ITEM OF WORK. NOTIFY ENGINEER IMMEDIATELY OF ANY REQUIRED CHANGE IN DESIGN.
- CAP EXISTING STORM DRAIN AT DEMOLITION LIMITS - NOTIFY ENGINEER OF ALL LOCATIONS, SIZES AND INVERT ELEVATIONS AT COMPLETION OF DEMOLITION.
- IF INLET PIPES ARE FOUND CONNECTING TO EXISTING GRATES THAT ARE REMOVED DURING THE CONSTRUCTION OF THIS PROJECT (OR PIPES ARE DAMAGED OR REMOVED DURING CONSTRUCTION) THAT RUN OUTSIDE OF DEMOLITION LIMITS, NOTIFY ENGINEER IMMEDIATELY OF THE LOCATION AND SIZE TO INSURE CONTINUITY OF DRAINAGE UPSTREAM.

LANDSCAPE IRRIGATION DEMOLITION NOTES:

THE CONTRACTOR SHALL TEMPORARILY RELOCATE ANY IRRIGATION EQUIPMENT (BACKFLOWS, MAINLINE, VALVES, CONTROLLERS, ETC.) TO ENSURE ANY EXISTING IRRIGATION, OUTSIDE THE SCOPE OF WORK, REMAINS IN WORKING ORDER DURING THE TIME OF DEMOLITION AND CONSTRUCTION OF THE NEW FACILITIES. ALL "HIGHLINED" IRRIGATION PIPE AND WIRES SHALL BE INSTALLED ON-GRADE AND WITHIN THE CONSTRUCTION FENCING.

ELECTRICAL DEMOLITION NOTES:

1. ALL EXISTING ELECTRICAL WITHIN THE DEMOLITION AREA SHALL BE REMOVED AS REQUIRED TO CLEAR THE AREA. THIS WORK INCLUDES, BUT IS NOT LIMITED TO, THE FOLLOWING:
   - A. ALL EXISTING WIRE SHALL BE REMOVED FROM CONDUIT.
   - A. ALL EXISTING CONDUIT, THAT INTERFERES WITH ANY NEW CONSTRUCTION SHALL BE CUT BACK AS REQUIRED TO CLEAR NEW CONSTRUCTION.
   - B. FOR EXISTING CONSTRUCTION THAT IS TO BE REMOVED REMOVE ALL EXISTING EXPOSED, SURFACE, AND CONCEALED CONDUIT AND RACEWAYS. RECONNECT EQUIPMENT AND LIGHTING FIXTURES THAT REMAIN AND WHICH ARE NOW FED THROUGH THE CONDUIT AND WIRING TO BE REMOVED.
   - C. DO NOT REUSE SALVAGED MATERIALS AND EQUIPMENT, UNLESS SPECIFICALLY INDICATED ON PLANS OR SPECIFIED. REMOVE FROM PREMISES AND DISPOSE OF ALL MATERIALS CONSIDERED BY ARCHITECT TO BE SCRAP.
2. DISPOSAL OF HAZARDOUS MATERIALS SUCH AS LAMPS SHALL BE DISPOSED OF IN ACCORDANCE WITH ALL STATE AND FEDERAL REQUIREMENTS.

SCALE: 1" = 20'
0 10 20 40

DIGALERT
DIAL TOLL FREE
1-800-422-4133
AT LEAST TWO DAYS BEFORE YOU DIG
UNDERGROUND SERVICE ALERT OF SOUTHERN CALIFORNIA

PREPARED BY:
civTEC
999 CORPORATE DR.
SUITE 100
LADERA RANCH, CA 92694
p: 949.463.8822
e: tec@civtec.net

REGISTERED PROFESSIONAL ENGINEER THOMAS E. CHRISTENSEN C-61640 Exp. 09-30-23 STATE OF CALIFORNIA CIVIL
3/08/2022

REVISIONS			
NO.	DESCRIPTION	DATE	APPROVED

B.M.: THE CITY OF GARDENA BENCHMARK NO. SD-15 ELEV. = 43.508'

CITY OF GARDENA
DEPARTMENT OF PUBLIC WORKS - ENGINEERING

DEMOLITION PLAN
COMMUNITY AQUATICS & SENIOR CENTER
D-1.01

	INITIAL	DATE
DESIGNED BY	TEC	
DRAWN BY	STAFF	
CHECKED BY	TEC	

APPROVED BY:
DATE 3/8/22
DIRECTOR OF PUBLIC WORKS

SHT. 2 OF 4 DWG. NO. 5-2606

PLOT DATE: 3/8/2022

DEMOLITION GENERAL NOTES

1. CONTRACTOR SHALL CONDUCT A SURVEY OF EXISTING CONDITIONS AND CORRELATE WITH REQUIREMENTS INDICATED TO DETERMINE AND VERIFY THE EXTENT OF DEMOLITION REQUIRED.
2. CONTRACTOR SHALL RECORD EXISTING CONDITIONS BY USE OF PRE-CONSTRUCTION PHOTOGRAPHS, PRE-CONSTRUCTION VIDEOTAPES, AND DRAWINGS AS APPROPRIATE.
3. A SURVEY SHALL BE PERFORMED AS WORK PROGRESSES TO DETECT HAZARDS RESULTING FROM DEMOLITION ACTIVITIES.
4. CONTRACTOR SHALL KEEP INVENTORY AND RECORD THE CONDITION OF ITEMS TO BE REMOVED.
5. LOCATE ALL EXISTING UTILITIES WHETHER SHOWN HEREON OR NOT AS THE FIRST ITEM OF WORK AND PROTECT THEM FROM DAMAGE. NOTIFY OWNER IMMEDIATELY IF DAMAGE OCCURS AND ASSUME FULL RESPONSIBILITY FOR EXPENSE OF REPAIR OR REPLACEMENT. NOTIFY OWNER'S REPRESENTATIVE IMMEDIATELY SHOULD FIELD CONDITIONS VARY FROM THOSE SHOWN ON PLAN.
6. WHEN UNANTICIPATED ELECTRICAL, STRUCTURAL, OR OTHER ELEMENTS INCLUDING STORM DRAIN, WATER AND SEWER LINES THAT CONFLICT WITH INTENDED DESIGN ARE ENCOUNTERED, CONTRACTOR SHALL INVESTIGATE AND MEASURE THE NATURE AND EXTENT OF CONFLICT AND CONTRACTOR SHALL PROMPTLY SUBMIT A WRITTEN REPORT TO THE CITY.
7. CONTRACTOR SHALL LOCATE, IDENTIFY, DISCONNECT, AND SEAL OR CAP OFF INDICATED UTILITY SERVICES AND MECHANICAL/ELECTRICAL SYSTEMS SERVING AREAS TO BE SELECTIVELY DEMOLISHED AND:
   - SHALL ARRANGE TO SHUT OFF INDICATED UTILITIES WITH UTILITY COMPANIES.
   - IF SERVICES/SYSTEMS ARE REQUIRED TO BE REMOVED, RELOCATED, OR ABANDONED, BEFORE PROCEEDING WITH DEMOLITION CONTRACTOR SHALL PROVIDE TEMPORARY SERVICES/SYSTEMS THAT BYPASS AREA OF DEMOLITION AND THAT MAINTAIN CONTINUITY OF SERVICES/SYSTEMS TO OTHER PARTS OF BUILDING AND SITE.
   - SHALL CUT OFF PIPE OR CONDUIT IN WALLS TO BE REMOVED, CAP, VALVE, OR PLUG AND SEAL REMAINING PORTION OF PIPE OR CONDUIT AFTER BYPASSING. WHERE ENTIRE WALL IS TO BE REMOVED, EXISTING SERVICES/SYSTEMS MAY BE REMOVED WITH REMOVAL OF THE WALL. CONTRACTOR SHALL CUT OFF PIPE OR CONDUIT SO IT WILL NOT BE VISIBLE IN FINISHED CONSTRUCTION.
9. CONTRACTOR SHALL PROTECT EXISTING SERVICES/SYSTEMS INDICATED AGAINST DAMAGE DURING DEMOLITION OPERATIONS.
10. INACTIVE OR ABANDONED UTILITIES SHALL BE DISCONNECTED, REMOVED, AND PLUGGED OR CAPPED SUBJECT TO THE LOCAL GOVERNING AGENCIES.
11. ACTIVE UTILITIES SHALL BE PROTECTED BY AND AT THE EXPENSE OF THE CONTRACTOR. KEEP ANY REQUIRED UTILITY IN OPERATING CONDITION DURING THE ENTIRE PERIOD OF WORK, INCLUDING EXISTING IRRIGATION SYSTEMS FOR LANDSCAPE MAINTENANCE.
12. DO NOT WILLFULLY PROCEED WITH CONSTRUCTION WHEN IT IS OBVIOUS THAT KNOWN OBSTRUCTIONS EXIST THAT MAY NOT HAVE BEEN KNOWN DURING DESIGN. SUCH CONDITIONS SHALL BE IMMEDIATELY BROUGHT TO THE ATTENTION OF THE OWNER'S AUTHORIZED REPRESENTATIVE. ASSUME RESPONSIBILITY FOR ALL NECESSARY REVISION DUE TO FAILURE TO GIVE SUCH NOTIFICATION.
13. CONTRACTOR SHALL CONDUCT DEMOLITION AND DEBRIS-REMOVAL OPERATIONS TO ENSURE MINIMUM INTERFERENCE WITH ROADS, STREETS, WALKS, WALKWAYS, AND OTHER ADJACENT OCCUPIED AND USED FACILITIES.
14. CONTRACTOR SHALL PROVIDE TEMPORARY BARRICADES AND OTHER PROTECTION REQUIRED TO PREVENT INJURY TO PEOPLE AND DAMAGE TO ADJACENT BUILDINGS AND FACILITIES TO REMAIN AND:
   - SHALL PROVIDE TEMPORARY WEATHER PROTECTION, DURING THE INTERVAL BETWEEN DEMOLITION OF EXISTING CONSTRUCTION ON EXTERIOR SURFACES AND NEW CONSTRUCTION, TO PREVENT WATER LEAKAGE AND DAMAGE TO STRUCTURE AND INTERIOR AREAS.
   - SHALL PROTECT WORK THAT IS TO REMAIN OR THAT IS EXPOSED DURING DEMOLITION OPERATIONS.
   - SHALL COVER AND PROTECT EQUIPMENT THAT HAS NOT BEEN REMOVED.
15. CONTRACTOR SHALL PROVIDE AND MAINTAIN SHORING, BRACING, AND STRUCTURAL SUPPORTS AS REQUIRED TO PRESERVE STABILITY AND PREVENT MOVEMENT, SETTLEMENT, OR COLLAPSE OF CONSTRUCTION AND FINISHES THAT REMAIN, AND TO PREVENT UNEXPECTED OR UNCONTROLLED MOVEMENT OR COLLAPSE OF CONSTRUCTION BEING DEMOLISHED. CONTRACTOR SHALL STRENGTHEN OR ADD NEW SUPPORTS WHEN REQUIRED DURING PROGRESS OF DEMOLITION.
16. DEMOLITION AND REMOVAL WORK SHALL BE CAREFULLY PERFORMED TO AVOID DAMAGE TO EXISTING TREES NOTED ON THE PLANS TO REMAIN.
17. ALL WORK SHALL CONFORM TO THE REQUIREMENTS OF THE LATEST ADOPTED EDITIONS OF THE UNIFORM BUILDING CODE, THE AMERICANS WITH DISABILITIES ACT, AND ALL OTHER APPLICABLE LOCAL AND STATE CODES, ORDINANCES AND REGULATIONS.
18. CONTRACTOR SHALL USE METHODS REQUIRED TO COMPLETE THE WORK WITHIN THE LIMITATIONS OF GOVERNING REGULATIONS AND AS FOLLOWS:
   - SHALL NEATLY CUT OPENINGS AND HOLES PLUMB, SQUARE, AND TRUE TO DIMENSIONS REQUIRED, USING CUTTING METHODS LEAST LIKELY TO DAMAGE CONSTRUCTION TO REMAIN OR ADJOINING CONSTRUCTION. USE HAND TOOLS OR SMALL POWER TOOLS DESIGNED FOR SAWING OR GRINDING, NOT HAMMERING AND CHOPPING, TO MINIMIZE DISTURBANCE OF ADJACENT SURFACES. TEMPORARILY COVER OPENINGS TO REMAIN.
   - SHALL CUT OR DRILL FROM THE EXPOSED OR FINISHED SIDE INTO CONCEALED SURFACES TO AVOID MARRING EXISTING FINISHED SURFACES.
   - SHALL NOT USE CUTTING TORCHES UNTIL WORK AREA IS CLEARED OF FLAMMABLE MATERIALS. AT CONCEALED SPACES, SUCH AS DUCT AND PIPE INTERIORS, VERIFY CONDITION AND CONTENTS OF HIDDEN SPACE BEFORE STARTING FLAME-CUTTING OPERATIONS. MAINTAIN FIRE WATCH AND PORTABLE FIRE-SUPPRESSION DEVICES DURING FLAME-CUTTING OPERATIONS.
   - SHALL MAINTAIN ADEQUATE VENTILATION WHEN USING CUTTING TORCHES.
   - SHALL REMOVE DECAYED, TERMITE-INFESTED, VERMIN-INFESTED, OR OTHERWISE DANGEROUS OR UNSUITABLE MATERIALS AND PROMPTLY DISPOSE OF OFF-SITE.
   - SHALL LOCATE DEMOLITION EQUIPMENT AND REMOVE DEBRIS AND MATERIALS SO AS NOT TO IMPOSE EXCESSIVE LOADS ON STRUCTURES TO REMAIN.
19. CLEAR THE SITE OF GRASS, WEED GROWTH, RUBBISH, DEBRIS, PAVEMENT, CONCRETE, INACTIVE OR ABANDONED FACILITIES (VERIFIED BY THE AGENCY), THAT ARE TO BE REMOVED FOR CONSTRUCTION OF THE SITE IMPROVEMENTS TO THE LIMITS AND DEPTHS SHOWN ON THE PLANS.
20. ABANDONED UNDERGROUND FACILITIES (VERIFIED BY THE AGENCY), ROOTS THREE INCHES IN DIAMETER AND LARGER, AND ROCKS AND BROKEN MASONRY LARGER THAN 4 INCHES IN ANY DIMENSION SHALL BE REMOVED TO A MINIMUM DEPTH OF 12' BELOW FINISH GRADE.
21. ALL DELETERIOUS MATERIALS WITHIN THE LIMITS OF THE WORK SHALL BE DISPOSED OF OFF-SITE BY THE CONTRACTOR, WHO SHALL MAKE ALL NECESSARY ARRANGEMENTS AND PAY ALL RELATED COSTS.
22. CONTRACTOR SHALL REMOVE DEMOLISHED MATERIALS FROM PROJECT SITE AND LEGALLY DISPOSE OF THEM AT THE CONTRACTOR'S EXPENSE IN AN EPA-APPROVED LANDFILL AND:
   - SHALL NOT ALLOW DEMOLISHED MATERIALS TO ACCUMULATE ON-SITE.
   - SHALL REMOVE AND TRANSPORT DEBRIS IN A MANNER THAT WILL PREVENT SPILLAGE ON ADJACENT SURFACES AND AREAS.
23. CONTRACTOR SHALL NOT BURN DEMOLISHED MATERIALS.
24. CONTRACTOR SHALL CLEAN ADJACENT STRUCTURES AND IMPROVEMENTS OF DUST, DIRT, AND DEBRIS CAUSED BY DEMOLITION OPERATIONS AND RETURN ADJACENT AREAS TO CONDITION EXISTING BEFORE DEMOLITION OPERATIONS BEGAN.

GENERAL NOTES:

1. ALL GRADING AND CONSTRUCTION SHALL CONFORM TO THE CITY OF GARDENA BUILDING CODE AND THE 2019 CALIFORNIA BUILDING CODE AND UNLESS SPECIFICALLY NOTED ON THESE PLANS.
2. ANY MODIFICATIONS OF OR CHANGES TO APPROVED GRADING PLANS MUST BE APPROVED BY THE BUILDING OFFICIAL.
3. NO GRADING SHALL BE STARTED WITHOUT FIRST NOTIFYING THE BUILDING OFFICIAL A PRE-GRADING MEETING AT THE SITE IS REQUIRED BEFORE THE START OF THE GRADING WITH THE FOLLOWING PEOPLE PRESENT: OWNER, GRADING CONTRACTOR, DESIGN CIVIL ENGINEER, SOILS ENGINEER, GEOLOGIST, COUNTY GRADING INSPECTOR(S) OR THEIR REPRESENTATIVES, AND WHEN REQUIRED THE ARCHEOLOGIST OR OTHER JURISDICTIONAL AGENCIES. PERMITTEE OR HIS AGENT ARE RESPONSIBLE FOR ARRANGING PRE-GRADE MEETING AND MUST NOTIFY THE BUILDING OFFICIAL AT LEAST TWO BUSINESS DAYS PRIOR TO PROPOSED PRE-GRADE MEETING.
4. APPROVAL OF THESE PLANS REFLECT SOLELY THE REVIEW OF PLANS IN ACCORDANCE WITH THE COUNTY OF LOS ANGELES BUILDING CODES AND DOES NOT REFLECT ANY POSITION BY THE COUNTY OF LOS ANGELES OR THE DEPARTMENT OF PUBLIC WORKS REGARDING THE STATUS OF ANY TITLE ISSUES RELATING TO THE LAND ON WHICH THE IMPROVEMENTS MAY BE CONSTRUCTED. ANY DISPUTES RELATING TO TITLE ARE SOLELY A PRIVATE MATTER NOT INVOLVING THE COUNTY OF LOS ANGELES OR THE DEPARTMENT OF PUBLIC WORKS.
5. ALL GRADING AND CONSTRUCTION ACTIVITIES SHALL COMPLY WITH COUNTY OF LOS ANGELES CODE, TITLE 12, SECTION 12.12.030 THAT CONTROLS AND RESTRICTS NOISE FROM THE USE OF CONSTRUCTION AND GRADING EQUIPMENT FROM THE HOURS OF 8:00 PM TO 6:30 AM, AND ON SUNDAYS AND HOLIDAYS. (MORE RESTRICTIVE CONSTRUCTION ACTIVITY TIMES MAY GOVERN, AS REQUIRED BY THE DEPARTMENT OF REGIONAL PLANNING AND SHOULD BE SHOWN ON THE GRADING PLANS WHEN APPLICABLE.)
6. CALIFORNIA PUBLIC RESOURCES CODE (SECTION 5097.98) AND HEALTH AND SAFETY CODE (SECTION 7050.5) ADDRESS THE DISCOVERY AND DISPOSITION OF HUMAN REMAINS. IN THE EVENT OF DISCOVERY OR RECOGNITION OF ANY HUMAN REMAINS IN ANY LOCATION OTHER THAN A DEDICATED CEMETERY, THE LAW REQUIRES THAT GRADING IMMEDIATELY STOPS AND NO FURTHER EXCAVATION OR DISTURBANCE OF THE SITE, OR ANY NEARBY AREA WHERE HUMAN REMAINS MAY BE LOCATED, OCCUR UNTIL THE FOLLOWING HAS BEEN MEASURES HAVE BEEN TAKEN:
   a. THE COUNTY CORONER HAS BEEN INFORMED AND HAS DETERMINED THAT NO INVESTIGATION OF THE CAUSE OF DEATH IS REQUIRED, AND
   b. IF THE REMAINS ARE OF NATIVE AMERICAN ORIGIN, THE DESCENDANTS FROM THE DECEASED NATIVE AMERICANS HAVE MADE A RECOMMENDATION FOR THE MEANS OF TREATING OR DISPOSING, WITH APPROPRIATE DIGNITY, OF THE HUMAN REMAINS AND ANY ASSOCIATED GRAVE GOODS.
7. THE LOCATION AND PROTECTION OF ALL UTILITIES IS THE RESPONSIBILITY OF THE PERMITTEE.
8. ALL EXPORT OF MATERIAL FROM THE SITE MUST GO TO A PERMITTED SITE APPROVED BY THE BUILDING OFFICIAL OR A LEGAL DUMPSITE. RECEIPTS FOR ACCEPTANCE OF EXCESS MATERIAL BY A DUMPSITE ARE REQUIRED AND MUST BE PROVIDED TO THE BUILDING OFFICIAL UPON REQUEST.
9. A COPY OF THE GRADING PERMIT AND APPROVED GRADING PLANS MUST BE IN THE POSSESSION OF A RESPONSIBLE PERSON AND AVAILABLE AT THE SITE AT ALL TIMES.
10. SITE BOUNDARIES, EASEMENTS, DRAINAGE DEVICES, RESTRICTED USE AREAS SHALL BE LOCATED PER CONSTRUCTION STAKING BY FIELD ENGINEER OR LICENSED SURVEYOR. PRIOR TO GRADING, AS REQUESTED BY THE BUILDING OFFICIAL, ALL PROPERTY LINES, EASEMENTS, AND RESTRICTED USE AREAS SHALL BE STAKED.
11. NO GRADING OR CONSTRUCTION SHALL OCCUR WITHIN THE PROTECTED ZONE OF ANY OAK TREE AS REQUIRED PER TITLE CHAPTER 22.56 OF THE COUNTY OF LOS ANGELES ZONING CODE. THE PROTECTED ZONE SHALL MEAN THAT AREA WITHIN THE DRIP LINE OF AN OAK TREE EXTENDING THERE FROM A POINT AT LEAST FIVE FEET OUTSIDE THE DRIP LINE, OR 15 FEET FROM THE TRUNK(S) OF A TREE, WHICHEVER IS GREATER.

    IF AN OAK TREE PERMIT IS OBTAINED: (ADD THE FOLLOWING NOTE :)

    ALL GRADING AND CONSTRUCTION WITHIN THE PROTECTED ZONE OF ALL OAK TREES SHALL BE PER OAK TREE PERMIT NO. . ALL RECOMMENDATIONS IN THE PERMIT AND ASSOCIATED OAK TREE REPORT MUST BE COMPLIED WITH AND ARE A PART OF THE GRADING PLAN. A COPY OF THE OAK TREE PERMIT AND ASSOCIATED REPORTS SHALL BE MAINTAINED IN THE POSSESSION OF A RESPONSIBLE PERSON AND AVAILABLE AT THE SITE AT ALL TIMES.
12. THE STANDARD RETAINING WALL DETAILS SHOWN ON THE GRADING PLANS ARE FOR REFERENCE ONLY. STANDARD RETAINING WALLS ARE NOT CHECKED, PERMITTED, OR INSPECTED PER THE GRADING PERMIT. A SEPARATE RETAINING WALL PERMIT IS REQUIRED FOR ALL STANDARD RETAINING WALLS.

    NOTE: THIS NOTE ONLY APPLIES TO STANDARD RETAINING WALLS. GEOGRID FABRIC AND SEGMENTAL RETAINING WALLS DO NOT REQUIRE A SEPARATE RETAINING WALL PERMIT. DETAILS AND CONSTRUCTION NOTES FOR ALL GEOGRID WALLS MUST BE ON THE GRADING PLAN.
13. A PREVENTIVE PROGRAM TO PROTECT THE SLOPES FROM POTENTIAL DAMAGE FROM BURROWING RODENTS IS REQUIRED PER SECTION J101.8 OF THE COUNTY OF LOS ANGELES BUILDING CODE. OWNER IS TO INSPECT SLOPES PERIODICALLY FOR EVIDENCE OF BURROWING RODENTS AND A FIRST EVIDENCE OF THEIR EXISTENCE SHALL EMPLOY AN EXTERMINATOR FOR THEIR REMOVAL.
14. WHERE A GRADING PERMIT IS ISSUED AND THE BUILDING OFFICIAL DETERMINES THAT THE GRADING WILL NOT BE COMPLETED PRIOR TO NOVEMBER 1, THE OWNER OF THE SITE ON WHICH THE GRADING IS BEING PERFORMED SHALL, ON OR BEFORE OCTOBER 1, FILE OR CAUSE TO BE FILED WITH THE BUILDING OFFICIAL AN ESCP PER SECTION J110.8.3 OF THE COUNTY OF LOS ANGELES BUILDING CODE.
15. TRANSFER OF RESPONSIBILITY: IF THE FIELD ENGINEER, THE SOILS ENGINEER, OR THE ENGINEERING GEOLOGIST OF RECORD IS CHANGED DURING GRADING, THE WORK SHALL BE STOPPED UNTIL THE REPLACEMENT HAS AGREED IN WRITING TO ACCEPT THEIR RESPONSIBILITY WITHIN THE AREA OF TECHNICAL COMPETENCE FOR APPROVAL UPON COMPLETION OF THE WORK. IT SHALL BE THE DUTY OF THE PERMITTEE TO NOTIFY THE BUILDING OFFICIAL IN WRITING OF SUCH CHANGE PRIOR TO THE RECOMMENCEMENT OF SUCH GRADING.

GENERAL GEOTECHNICAL NOTES

16. ALL WORK MUST BE IN COMPLIANCE WITH THE RECOMMENDATIONS INCLUDED IN THE GEOTECHNICAL CONSULTANT'S REPORT(S) AND THE APPROVED PLANS AND SPECIFICATIONS.
17. GRADING OPERATIONS MUST BE CONDUCTED UNDER PERIODIC INSPECTIONS BY THE GEOTECHNICAL CONSULTANTS AS REQUIRED BY THE CITY OF GARDENA.
18. THE SOIL ENGINEER SHALL PROVIDE SUFFICIENT INSPECTIONS DURING THE PREPARATION OF THE NATURAL GROUND AND THE PLACEMENT AND COMPACTION OF THE FILL TO BE SATISFIED THAT THE WORK IS BEING PERFORMED IN ACCORDANCE WITH THE PLAN AND APPLICABLE CODE REQUIREMENTS.
19. ROUGH GRADING MUST BE APPROVED BY A FINAL ENGINEERING GEOLOGY AND SOILS ENGINEERING REPORT. AN AS-BUILT GEOLOGIC MAP MUST BE INCLUDED IN THE FINAL GEOLOGY REPORT. PROVIDE A FINAL REPORT STATEMENT THAT VERIFIES WORK WAS DONE IN ACCORDANCE WITH REPORT RECOMMENDATIONS AND CODE PROVISIONS (SECTION J105.12 OF THE COUNTY OF LOS ANGELES BUILDING CODE). THE FINAL REPORT(S) MUST BE SUBMITTED TO THE CITY OF GARDENA FOR REVIEW AND APPROVAL.
20. ALL REQUIRED THIRD-PARTY TESTING TO BE PROVIDED AT CONTRACTORS EXPENSE.

FILL NOTES

21. GRADING WORK IS TO ONLY FOLLOW THE DEMOLITION RECOMMENDATIONS IN THE SOILS REPORT.
    a. OVEREXCAVATION AND PREP. FOR THE FUTURE BUILDING PAD IS NOT REQUIRED FOR ROUGH GRADING.
21. ALL FILL SHALL BE COMPACTED TO THE FOLLOWING MINIMUM RELATIVE COMPACTION CRITERIA:
    a. 90 PERCENT OF MAXIMUM DRY DENSITY WITHIN 40 FEET BELOW FINISH GRADE.
    b. 93 PERCENT OF MAXIMUM DRY DENSITY DEEPER THAN 40 FEET BELOW FINISH GRADE, UNLESS A LOWER RELATIVE COMPACTION (NOT LESS THAN 90 PERCENT OF MAXIMUM DRY DENSITY) IS JUSTIFIED BY THE GEOTECHNICAL ENGINEER.

       THE RELATIVE COMPACTION SHALL BE DETERMINED BY A.S.T.M. SOIL COMPACTION TEST D1557- 91 WHERE APPLICABLE; WHERE NOT APPLICABLE, A TEST ACCEPTABLE TO THE BUILDING OFFICIAL SHALL BE USED. (SECTION J107.5 OF THE COUNTY OF LOS ANGELES BUILDING CODE.)
22. FIELD DENSITY SHALL BE DETERMINED BY A METHOD ACCEPTABLE TO THE BUILDING OFFICIAL. (SECTION J107.5 OF THE COUNTY OF LOS ANGELES BUILDING CODE.) HOWEVER, NOT LESS THAN 10% OF THE REQUIRED DENSITY TEST, UNIFORMLY DISTRIBUTED, AND SHALL BE OBTAINED BY THE SAND CONE METHOD.
23. SUFFICIENT TESTS OF THE FILL SOILS SHALL BE MADE TO DETERMINE THE RELATIVE COMPACTION OF THE FILL IN ACCORDANCE WITH THE FOLLOWING MINIMUM GUIDELINES:
    a. ONE TEST FOR EACH TWO-FOOT VERTICAL LIFT.
    b. ONE TEST FOR EACH 1,000 CUBIC YARDS OF MATERIAL PLACED.
    c. ONE TEST AT THE LOCATION OF THE FINAL FILL SLOPE FOR EACH BUILDING SITE (LOT) IN EACH FOUR-FOOT VERTICAL LIFT OR PORTION THEREOF.
    d. ONE TEST IN THE VICINITY OF EACH BUILDING PAD FOR EACH FOUR-FOOT VERTICAL LIFT OR PORTION THEREOF.
24. SUFFICIENT TESTS OF FILL SOILS SHALL BE MADE TO VERIFY THAT THE SOIL PROPERTIES COMPLY WITH THE DESIGN REQUIREMENTS, AS DETERMINED BY THE SOIL ENGINEER INCLUDING SOIL TYPES, SHEAR STRENGTHS PARAMETERS AND CORRESPONDING UNIT WEIGHTS IN ACCORDANCE WITH THE FOLLOWING GUIDELINES:
    a. PRIOR AND SUBSEQUENT TO PLACEMENT OF THE FILL, SHEAR TESTS SHALL BE TAKEN ON EACH TYPE OF SOIL OR SOIL MIXTURE TO BE USED FOR ALL FILL SLOPES STEEPER THAN THREE (3) HORIZONTAL TO ONE VERTICAL.
    b. SHEAR TEST RESULTS FOR THE PROPOSED FILL MATERIAL MUST MEET OR EXCEED THE DESIGN VALUES USED IN THE GEOTECHNICAL REPORT TO DETERMINE SLOPE STABILITY REQUIREMENTS. OTHERWISE, THE SLOPE MUST BE REEVALUATED USING THE ACTUAL SHEAR TEST VALUE OF THE FILL MATERIAL THAT IS IN PLACE.
    c. FILL SOILS SHALL BE FREE OF DELETERIOUS MATERIALS.
25. FILL SHALL NOT BE PLACED UNTIL STRIPPING OF VEGETATION, REMOVAL OF UNSUITABLE SOILS, AND INSTALLATION OF SUBDRAIN (IF ANY) HAVE BEEN INSPECTED AND APPROVED BY THE SOIL ENGINEER. THE BUILDING OFFICIAL MAY REQUIRE A "TP AND ARD TEST METHOD FOR MOISTURE, ASH, ORGANIC MATTER, PEAT OR OTHER ORGANIC SOILS" ASTM D-2974-87 ON ANY SUSPECT MATERIAL. DETRIMENTAL AMOUNTS OF ORGANIC MATERIAL SHALL NOT BE PERMITTED IN FILLS. SOIL CONTAINING SMALL AMOUNTS OF ROOTS MAY BE ALLOWED PROVIDED THAT THE ROOTS ARE IN A QUANTITY AND DISTRIBUTED IN A MANNER THAT WILL NOT BE DETRIMENTAL TO THE FUTURE USE OF THE SITE AND THE SOILS ENGINEER APPROVES THE USE OF SUCH MATERIAL.
26. ROCK OR SIMILAR MATERIAL GREATER THAN 12 INCHES IN DIAMETER SHALL NOT BE PLACED IN THE FILL UNLESS RECOMMENDATIONS FOR SUCH PLACEMENT HAVE BEEN SUBMITTED BY THE SOIL ENGINEER AND APPROVED IN ADVANCE BY THE BUILDING OFFICIAL. LOCATION, EXTENT, AND ELEVATION OF ROCK DISPOSAL AREAS MUST BE SHOWN ON AN "AS BUILT" GRADING PLAN.
27. CONTINUOUS INSPECTION BY THE SOIL ENGINEER, OR A RESPONSIBLE REPRESENTATIVE, SHALL BE PROVIDED DURING ALL FILL PLACEMENT AND COMPACTION OPERATIONS WHERE FILLS HAVE A DEPTH GREATER THAN 30 FEET OR SLOPE SURFACE STEEPER THAN 2:1. (SECTION J107.8 OF THE COUNTY OF LOS ANGELES BUILDING CODE)
28. CONTINUOUS INSPECTION BY THE SOIL ENGINEER, OR A RESPONSIBLE REPRESENTATIVE, SHALL BE PROVIDED DURING ALL SUBDRAIN INSTALLATION. (PER THE CITY OF GARDENA BUILDING CODE)
29. FILL SLOPES IN EXCESS OF 2:1 STEEPNESS RATIO ARE TO BE CONSTRUCTED BY THE PLACEMENT OF SOIL AT SUFFICIENT DISTANCE BEYOND THE PROPOSED FINISH SLOPE TO ALLOW COMPACTION EQUIPMENT TO BE OPERATED AT THE OUTER LIMITS OF THE FINAL SLOPE SURFACE. THE EXCESS FILL IS TO BE REMOVED PRIOR TO COMPLETION OF ROUGH GRADING. OTHER CONSTRUCTION PROCEDURES MAY BE USED WHEN IT IS DEMONSTRATED TO THE SATISFACTION OF THE BUILDING OFFICIAL THAT THE ANGLE OF SLOPE, CONSTRUCTION METHOD AND OTHER FACTORS WILL HAVE EQUIVALENT EFFECT. (SECTION J107.5 OF THE COUNTY OF LOS ANGELES BUILDING CODE.)

PRIVATE ENGINEERS NOTICE TO CONTRACTOR(S)

1. THE EXISTENCE AND LOCATION OF ANY UNDERGROUND UTILITIES AND/OR STRUCTURES SHOWN ON THESE PLANS WERE OBTAINED BY A SEARCH OF THE AVAILABLE RECORDS. APPROVAL OF THESE PLANS BY THE CITY DOES NOT CONSTITUTE A REPRESENTATION AS TO THE ACCURACY OR COMPLETENESS OF THE LOCATION OR THE EXISTENCE OR NONEXISTENCE OF ANY UTILITY AND/OR STRUCTURE WITHIN THE LIMITS OF THIS PROJECT. THE CONTRACTOR IS REQUIRED TO TAKE ALL DUE PRECAUTIONARY MEANS TO PROTECT THE UTILITIES OF RECORD OR NOT OF RECORD OR NOT SHOWN ON THESE PLANS.
2. RELOCATION OR REMOVAL OF ANY EXISTING UTILITIES SHALL BE PERFORMED BY THE RESPECTIVE UTILITY OWNERS, AT THE EXPENSE OF THE CONTRACTOR.
3. UNAUTHORIZED CHANGES & USES: THE ENGINEER PREPARING THESE PLANS WILL NOT BE RESPONSIBLE FOR, OR LIABLE FOR, UNAUTHORIZED CHANGES TO OR USES OF THESE PLANS. ALL CHANGES TO THE PLANS MUST BE IN WRITING AND MUST BE APPROVED BY THE PREPARER OF THESE PLANS AND THE CITY.

CONTRACTOR'S RESPONSIBILITY

THE CONTRACTOR IS REQUIRED TO TAKE DUE PRECAUTIONARY MEASURES TO PROTECT THE UTILITY LINES SHOWN ON THESE DRAWINGS. THE CONTRACTOR FURTHER ASSUMES ALL LIABILITY AND RESPONSIBILITY FOR THE UTILITY PIPES, CONDUITS OR STRUCTURES SHOWN OR NOT SHOWN ON THESE DRAWINGS.

THE CONTRACTOR AGREES THAT HE SHALL ASSUME SOLE AND COMPLETE RESPONSIBILITY FOR JOB SITE CONDITIONS DURING THE COURSE OF CONSTRUCTION OF THIS PROJECT, INCLUDING SAFETY OF ALL PERSONS AND PROPERTY THAT THIS REQUIREMENT SHALL APPLY CONTINUOUS AND NOT BE LIMITED TO NORMAL WORKING HOURS; AND THAT THE CONTRACTOR SHALL DEFEND, INDEMNIFY AND HOLD THE OWNER AND ENGINEER HARMLESS FROM ANY AND ALL LIABILITY ARISING FROM THE SOLE NEGLIGENCE OF THE OWNER OR ENGINEER.

REVIEWED
FOR
CODE COMPLIANCE
Apr 02, 2022
CITY OF GARDENA

DIGALERT
DIAL TOLL FREE
1-800-422-4133
AT LEAST TWO DAYS
BEFORE YOU DIG
UNDERGROUND SERVICE ALERT OF SOUTHERN CALIFORNIA

PREPARED BY:
CIVTEC
999 CORPORATE DR.
SUITE 100
LADERA RANCH, CA 92694
p: 949.463.8822
e: tec@civtec.net

REGISTERED PROFESSIONAL ENGINEER
THOMAS E. CIRCELLI
C-81640
Exp. 09-30-23
CIVIL
STATE OF CALIFORNIA
3/08/2022

REVISIONS			
NO.	DESCRIPTION	DATE	APPROVED

B.M.: THE CITY OF GARDENA BENCHMARK NO. SD-15
ELEV. = 43.508'

CITY OF GARDENA
DEPARTMENT OF PUBLIC WORKS - ENGINEERING
DEMOLITION PLAN ADDITIONAL NOTES
COMMUNITY AQUATICS & SENIOR CENTER
D-1.02

	INITIAL	DATE
DESIGNED BY	TEC	
DRAWN BY	STAFF	
CHECKED BY	TEC	

APPROVED BY:
DATE 3/8/22
DIRECTOR OF PUBLIC WORKS
SHT. 3 OF 4 DWG. NO. 5-2606
PLOT DATE: 3/8/2022

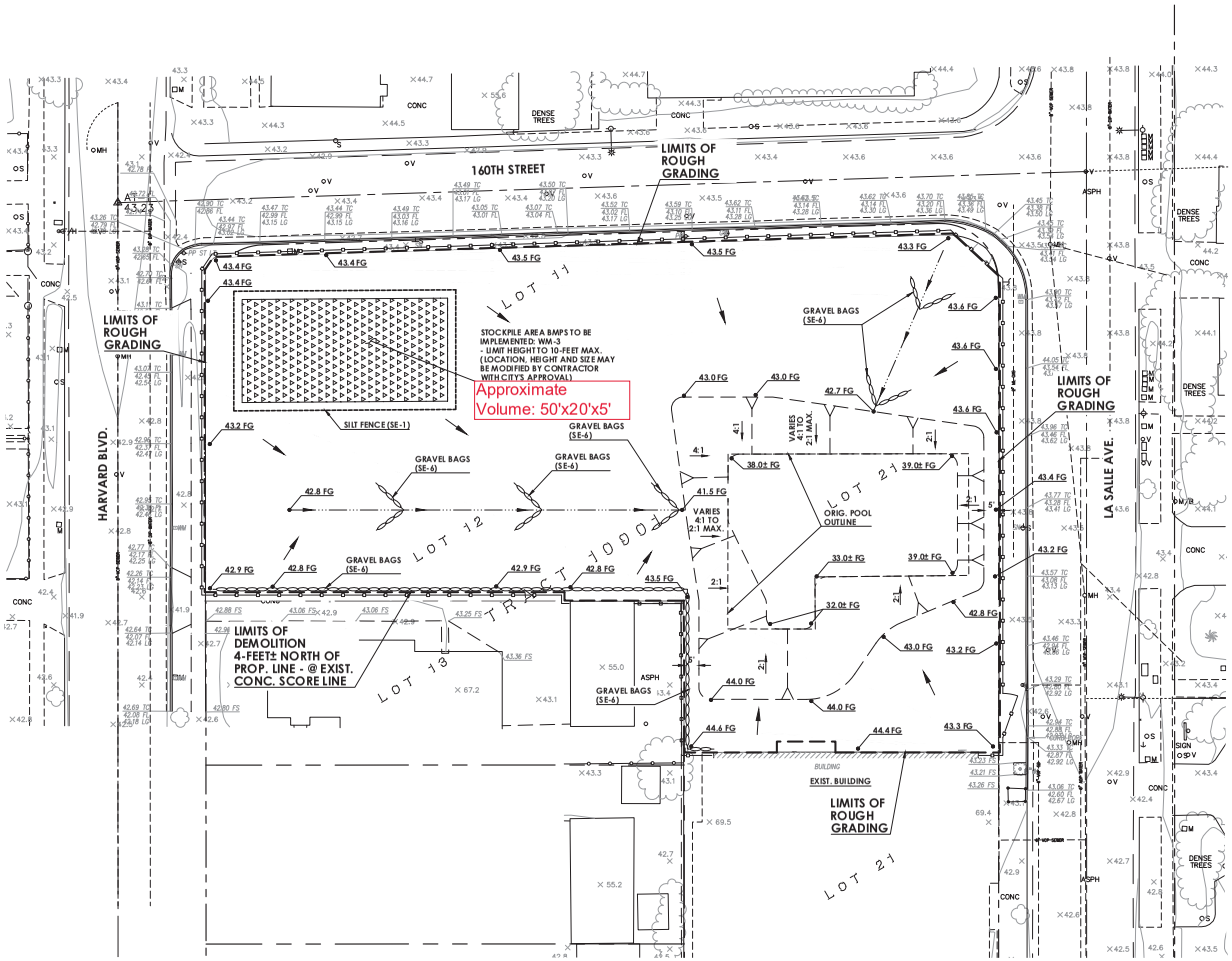

ROUGH GRADE GENERAL NOTES

SEE SHEET D-1.02 FOR ADDITIONAL NOTES.

LEGEND

	PROPERTY LINE
45	EXISTING CONTOUR
45.2	EXISTING SPOT ELEVATION
	PROPOSED SLOPE
12"W	EXISTING UTILITY LINE (TYPE AND SIZE AS NOTED)
GB	GRADE BREAK LINE
	FLOWLINE
	LIMITS OF ROUGH GRADING
	6-FOOT TALL CONSTRUCTION FENCE - LOCATION MAY BE REVISED WITH CITY APPROVAL
	GRAVEL BAGS (SE-6)

B.O.W.	BACK OF WALK
BLDG.	BUILDING
C.B.	CATCH BASIN
C.L.F.	CHAIN LINK FENCE
C&G	CURB & GUTTER
C.L.	CENTERLINE
C.O.	CLEANOUT
CONC.	CONCRETE
D.G.	DECOMPOSED GRANITE
DWY.	DRIVEWAY
D.F.	DRINKING FOUNTAIN
ELEC.	ELECTRIC
E.P.	EDGE OF PAVEMENT
F.F.	FINISHED FLOOR
F.H.	FIRE HYDRANT
F.L.	FLOWLINE
F.S.	FINISHED SURFACE
G.B.	GRADE BREAK
H.C.	HANDICAP
H.P.	HIGH POINT
INV.	INVERT
IRR. OR IRRIG.	IRRIGATION
L.P.	LOW POINT
M.H.	MANHOLE
P/A	PLANTER AREA
P.P.	POWER POLE
P.O.C.	POINT OF CONNECTION
R.D.	ROOF DRAIN
R.O.W.	RIGHT OF WAY
SD	STORM DRAIN
ST.	STREET
T.C.	TOP OF CURB
T.D.	TOP OF DECK
TEL.	TELEPHONE
T.G.	TOP OF GRATE
T.H.W.	TOP OF HEADWALL
T.F.	TOP OF FOOTING
T.O.S.	TOP OF SUBGRADE
T.W.	TOP OF WALL
S	SANITARY SEWER
W	WATER
W.I.F.	WROUGHT IRON FENCE
W.M.	WATER METER
W.V.	WATER VALVE

BASIS OF BEARINGS

BEARINGS SHOWN HEREON ARE BASED ON THE CENTERLINE OF 162 ND STREET (FORMERLY MARKET STREET) BEING N 89° 55' 30" E SHOWN ON TRACT NO. 10901, M.B. 254/31-32.

BENCHMARK

THE CITY OF GARDENA BENCHMARK NO. 5D-15

ELEV. = 43.508'

EARTHWORK **

AREA DISTURBED:	0.85±	ACRES
CUT	900	CUBIC YARDS
FILL	175	CUBIC YARDS
STOCKPILE	725	CUBIC YARDS

* THE ABOVE CUT/FILL QUANTITIES ARE FOR PERMIT PURPOSES ONLY. THIS CALCULATION DOES NOT INCLUDE SOILS FROM BUILDING OR WALL FOOTINGS, NOR ANY UTILITY TRENCHING. CONTRACTOR SHALL REFER TO THE SOILS REPORT FOR STATEMENTS CONCERNING GRADING REQUIREMENTS.
THIS CALCULATION ALSO ASSUMES THAT THE EXISTING CONCRETE AND ASPHALT SURFACES WILL BE REMOVED FROM THE SITE AND NOT BE REPURPOSED FOR ONSITE FILL.

** NOTICE TO THE CONTRACTOR

THE ESTIMATES OF IMPROVEMENT AND GRADING QUANTITIES AS SHOWN HEREON ARE PROVIDED FOR SATISFYING PLAN CHECK INFORMATION REQUIREMENTS ONLY. THE CONTRACTOR SHALL PERFORM AN INDEPENDENT ESTIMATE OF ALL IMPROVEMENT QUANTITIES INCLUDING GRADING QUANTITIES, AND SHALL USE SAME AS A BASIS FOR HIS BID(S) AND CONTRACT(S).

THE GRADING CONTRACTOR SHALL BE RESPONSIBLE AND ACCOUNT FOR DISTRIBUTING ANY EXCESS MATERIAL OR SUPPLYING ANY DEFICIENCIES TO BRING THE SITE TO DESIGN GRADE.

FILL NOTES

1. GRADING WORK IS TO ONLY FOLLOW THE DEMOLITION RECOMMENDATIONS IN THE SOILS REPORT.
   a. OVEREXCAVATION AND PREP. FOR THE FUTURE BUILDING PAD IS NOT REQUIRED FOR ROUGH GRADING.
2. ALL FILL SHALL BE COMPACTED TO THE FOLLOWING MINIMUM RELATIVE COMPACTION CRITERIA:
   a. 90 PERCENT OF MAXIMUM DRY DENSITY WITHIN 40 FEET BELOW FINISH GRADE.
   b. 93 PERCENT OF MAXIMUM DRY DENSITY DEEPER THAN 40 FEET BELOW FINISH GRADE, UNLESS A LOWER RELATIVE COMPACTION (NOT LESS THAN 90 PERCENT OF MAXIMUM DRY DENSITY) IS JUSTIFIED BY THE GEOTECHNICAL ENGINEER.

   THE RELATIVE COMPACTION SHALL BE DETERMINED BY A.S.T.M. SOIL COMPACTION TEST D1557-91 WHERE APPLICABLE: WHERE NOT APPLICABLE, A TEST ACCEPTABLE TO THE BUILDING OFFICIAL SHALL BE USED. (SECTION J107.5 OF THE COUNTY OF LOS ANGELES BUILDING CODE.)

NOTE TO CONTRACTOR:

ALL UTILITIES SHOULD BE SHUT OFF AND CAPPED PER UTILITY COMPANY REQUIREMENTS. CONTRACTOR SHALL COORDINATE WITH APPROPRIATE UTILITY COMPANY PRIOR TO COMMENCEMENT OF WORK.

NOTE TO CONTRACTOR:

INSTALL 6-FOOT CHAIN LINK FENCE WITH WINDSCREEN AND GATES, WHERE NECESSARY, ALONG THE PERIMETER OF THE SITE AS NEEDED. CONTRACTOR SHALL PROTECT THESE FENCES AND KEEP AREA FULLY SECURE DURING DEMOLITION.

DIGALERT
DIAL TOLL FREE 1-800-422-4133
AT LEAST TWO DAYS BEFORE YOU DIG
UNDERGROUND SERVICE ALERT OF SOUTHERN CALIFORNIA

NOTE TO CONTRACTOR:

- ALL GRADING AND EARTHWORK IS TO BE DONE IN ACCORDANCE WITH THE EARTHWORK SPECIFICATION AND AS DIRECTED BY THE GEOTECHNICAL ENGINEER.
- ALL COMPACTION OF NEW FILL SOILS IS TO BE DONE IN ACCORDANCE WITH THE EARTHWORK SPECIFICATION AND AS DIRECTED BY THE GEOTECHNICAL ENGINEER.

NOTE TO CONTRACTOR:

THE DEMOLITION CONTRACTOR SHALL MAINTAIN THE EXCAVATION IN COMPLIANCE WITH THE STORMWATER REGULATIONS AND PROVIDE PUMPING AND DESILTING DEVICES WHILE THE UNDER CONTRACT TO THE END OF THE RAINY SEASON, BEING A PRIL 1. THE CITY WILL ONLY COVER PUMPING OF THE POOL EXCAVATION AFTER THE DEMOLITION CONTRACT NOTICE OF COMPLETION IS FILED.

STORMWATER MITIGATION MEASURES (BMPs)

THE FOLLOWING BMP'S AS OUTLINED IN, BUT NOT LIMITED TO, THE BEST MANAGEMENT PRACTICE HANDBOOK, CALIFORNIA STORMWATER QUALITY TASK FORCE, SACRAMENTO, CALIFORNIA 2009, OR THE LATEST REVISED EDITION, APPLY DURING THE CONSTRUCTION OF THIS PROJECT. (ADDITIONAL MEASURES MAY BE REQUIRED IF DEEMED APPROPRIATE BY CITY INSPECTORS)

NS-1 WATER CONSERVATION PRACTICES *
NS-2 DEWATERING OPERATIONS *
NS-3 PAVING OPERATIONS *
NS-7 POTABLE WATER/IRRIGATION *
WM-1 MATERIAL DELIVERY AND STORAGE *
WM-2 MATERIAL USE *
WM-3 STOCKPILE MANAGEMENT *
WM-4 SPILL PREVENTION AND CONTROL *
WM-5 SOLID WASTE MANAGEMENT *
WM-6 HAZARDOUS WASTE MANAGEMENT *
WM-7 CONTAMINATED SOIL MANAGEMENT *
WM-8 CONCRETE WASTE MANAGEMENT *
WM-9 SANITARY-SEPTIC WASTE MANAGEMENT *
NS-8 VEHICLE AND EQUIPMENT CLEANING *
NS-9 VEHICLE AND EQUIPMENT FUELING *
NS-10 VEHICLE AND EQUIPMENT MAINTENANCE *

WE-1 WIND EROSION CONTROL
TC-1 STABILIZED CONSTRUCTION ENTRANCE *
TC-3 ENTRANCE OUTLET TIRE WASH *
SE-1 SILT FENCE
SE-4 CHECK DAMS
SE-5 FIBER ROLLS
SE-6 GRAVEL BAG BERM
SE-7 STREET SWEEPING AND VACUUMING
SE-9 STRAW BALE BARRIERS
SE-10 STORM DRAIN INLET PROTECTION
EC-1 SCHEDULING
EC-2 PRESERVATION OF EXISTING VEGETATION
EC-5 SOIL BINDERS

NOTE:
* LOCATIONS TO BE DETERMINED BY CONTRACTOR AND APPROVED BY CITY INSPECTOR

DEMOLITION ONLY

REVIEWED
FOR
CODE COMPLIANCE
Apr 02, 2022
CITY OF GARDENA

SCALE: 1" = 20'
0 10 20 40

PREPARED BY:
CIVTEC
999 CORPORATE DR.
SUITE 100
LADERA RANCH, CA 92694
p: 949.463.8822
e: tec@civtec.net

REGISTERED PROFESSIONAL ENGINEER THOMAS E. CIVTEC C-61640 Exp. 09-30-23 CIVIL STATE OF CALIFORNIA
3/08/2022

B.M.: THE CITY OF GARDENA BENCHMARK NO. 5D-15 ELEV. = 43.508'

REVISIONS

NO.	DESCRIPTION	DATE	APPROVED

CITY OF GARDENA
DEPARTMENT OF PUBLIC WORKS - ENGINEERING
ROUGH GRADE PLAN
COMMUNITY AQUATICS & SENIOR CENTER
D-1.03

	INITIAL	DATE
DESIGNED BY	TEC	
DRAWN BY	STAFF	
CHECKED BY	TEC	

APPROVED BY: Harold Allen Rigg
DATE 3/8/22
DIRECTOR OF PUBLIC WORKS

SHT. 4 OF 4 DWG. NO. 5-2606

PLOT DATE: 3/8/2022

DEPARTMENT of GENERAL SERVICES
1717 WEST 162nd STREET / GARDENA, CALIFORNIA 90247-3731 / WWW.CITYOFGARDENA.ORG / PHONE (310) 217-9568

NOVEMBER 8, 2023

GARDENA COMMUNITY AQUATIC AND SENIOR CENTER PROJECT (JN 978)

ADDENDUM NO. 1

TO: ALL SPECIFICATION HOLDERS

ADDENDUM NO. 1, AS DECRIBED BELOW, IS FOR USE OF CONTRACTORS AND SUBCONTRACTORS SUBMITTING BIDS ON THIS PROJECT. ALL BIDDERS SHALL INDICATE ON THE BID PROPOSAL FORM, "ACKNOWLEDGEMENT OF ADDENDA RECEIVED", THAT THEY HAVE RECEIVED THIS ADDENDUM NO. 1.

REVISIONS TO THE SPECIFICATIONS:

1. CSI Technical Provisions, PART 1 – GENERAL, 1.1 SUMMARY (01 11 00-1, TP-77) – 'Or approved equal' products are permitted for all project-specified items, with the exception of custom-engineered and designed shades by the USA Shade Structures.

2. CSI Technical Provisions, PART 1 – GENERAL, 1.3 ALTERNATES (01 23 00–1, TP-84) and 1.2 SUBTITUIONS (01 25 00-1, TP-86) – Material reviews are not accepted during the bid process. All substitution requests will be considered within 35 days after the contract is awarded.

REVISIONS TO THE PLANS:

1. Note Sheet, '***NOTICE TO THE CONTRACTOR', Sheet 5 of 195 – The City estimate stockpile volume to be 46 CY (25'x10'x5'), not 232 CY. The revised volume matches the call out on the Demolition Plan, Sheet 9 of 195.

2. Demolition Plan D-1.01, Sheet 9 of 195 –
   - On Lot 12, the existing water meter and its onsite water valve has not been abandoned. Therefore, the contractor shall coordinate with Golden State Water District to include the abandonment of the service line as part of the demolition bid scope. However, the contractor may use this service line during construction and choose to delay the abandonment.

   - Attached to this addendum, find the Environmental Soil Stockpile Sampling Report dated October 31, 2023, by Nino & Moore. The existing onsite stockpile samples have been tested and confirmed as non-hazardous waste.

END OF ADDENDUM NO. 1

ATTACHMENT

Ninyo & Moore
Geotechnical & Environmental Sciences Consultants

35+ YEARS

October 31, 2023
Project No. 212427001

Mr. Tim Shaw
Griffin Structures
1 Technology Drive, Building i, Suite 829
Irvine, California 92618

Subject: Environmental Soil Stockpile Sampling Report
Gardena Community Aquatics Center
16004 South Harvard Avenue
Gardena, California 90247

Dear Mr. Shaw:

In accordance with your authorization, Ninyo & Moore is pleased to provide the results of soil sampling and analysis performed on stockpiled soil at the site being developed as the Gardena Community Aquatics Center at 16004 South Harvard Avenue in Gardena, California. The purpose of the soil sampling was to evaluate the stockpiled soil for chemical contamination and acceptability for reuse at the development site. As requested by Griffin Structures, soil sampling was conducted on October 25, 2023. It is our understanding that approximately 46 cubic yards (cy) of soil was excavated and is currently stockpiled on site.

SOIL SAMPLING

Ninyo & Moore performed field work in accordance with standard field procedures, applicable regulatory guidelines, and under the direction of a California Professional Engineer/Geologist. On October 25, 2023, two soil borings were advanced into the stockpiled soil at the site using hand auger equipment. The approximate boring locations are shown on Figure 2.

Soil samples were collected at approximately 1 foot, 3 feet, and 5 feet below ground surface (bgs) at each boring location (Figure 2). The sample containers were labeled, placed in a cooler containing ice, and transported following standard chain-of-custody protocols to Eurofins Environmental Testing within 24 hours after their collection.

LABORATORY ANALYSES

The laboratory was instructed to composite the three depth-discrete samples from each boring location. The composited soil samples were tested for Title 22 Metals in accordance with EPA Method 6010B/7471A and Total Petroleum Hydrocarbons (TPH) using EPA Method 8015M for diesel range organics (DRO) and oil range organics (ORO). One discrete-depth sample from each boring

location was tested for volatile organic compounds (VOCs) and TPH gasoline range organics (GRO) in accordance with EPA Method 8260B.

ANALYTICAL RESULTS

Analytical results are discussed below. Laboratory reports are included in Attachment A.

Volatile Organic Compounds (VOCs)

Concentrations of VOCs were not reported exceeding the laboratory reporting limits in the soil samples analyzed.

Title 22 Metals

Reported metals concentrations are within the background levels found in California soils.

Total Petroleum Hydrocarbons (TPH)

Detectable concentrations of GRO were not reported exceeding the laboratory reporting limits. Low concentrations of petroleum hydrocarbons in the diesel range (8.5 to 14 mg/kg), C6-C44 range (24 to 43 mg/kg), and in the oil range C29-C32 (7.0 mg/kg) were reported.

CONCLUSIONS

Based on the laboratory analytical results of the soil samples analyzed during this sampling effort, the following findings and conclusions are provided:

- Detectable concentrations of VOCs were not reported in the samples analyzed.
- Detectable concentrations of metals were reported in the composite soil samples, but are below California background levels.
- Detectable concentrations of GRO were not reported in the samples analyzed. Diesel range petroleum hydrocarbons, and oil range petroleum hydrocarbons, were reported at 8.5 to 14 mg/kg, and 24 to 43 mg/kg mg/kg, respectively.

RECOMMENDATIONS

Based on the analytical results, the following recommendations are provided:

- Reuse of the stockpiled soil should be evaluated for compliance with the project specifications and requirements.
- For disposal, the soil should be characterized as petroleum hydrocarbon-impacted non-hazardous waste. Furthermore, the lab report should be forwarded to the accepting facility for waste profiling and facility acceptance.

Ninyo & Moore appreciates the opportunity to provide our services on this project. If you have any questions, please contact the undersigned at your convenience.

Respectfully submitted,
NINYO & MOORE

Matthew T. Schweiger
Staff Geologist

Prasad Thimmappa, PE
Principal Engineer

REGISTERED PROFESSIONAL ENGINEER
THIMMAPPA LAKSHMIPRASAD
NO. C057678
CIVIL
STATE OF CALIFORNIA

MTS/PT/scs

Attachments: Figure 1 – Site Location
Figure 2 – Soil Stockpile Sample Locations
Attachment A – Laboratory Reports

FIGURES

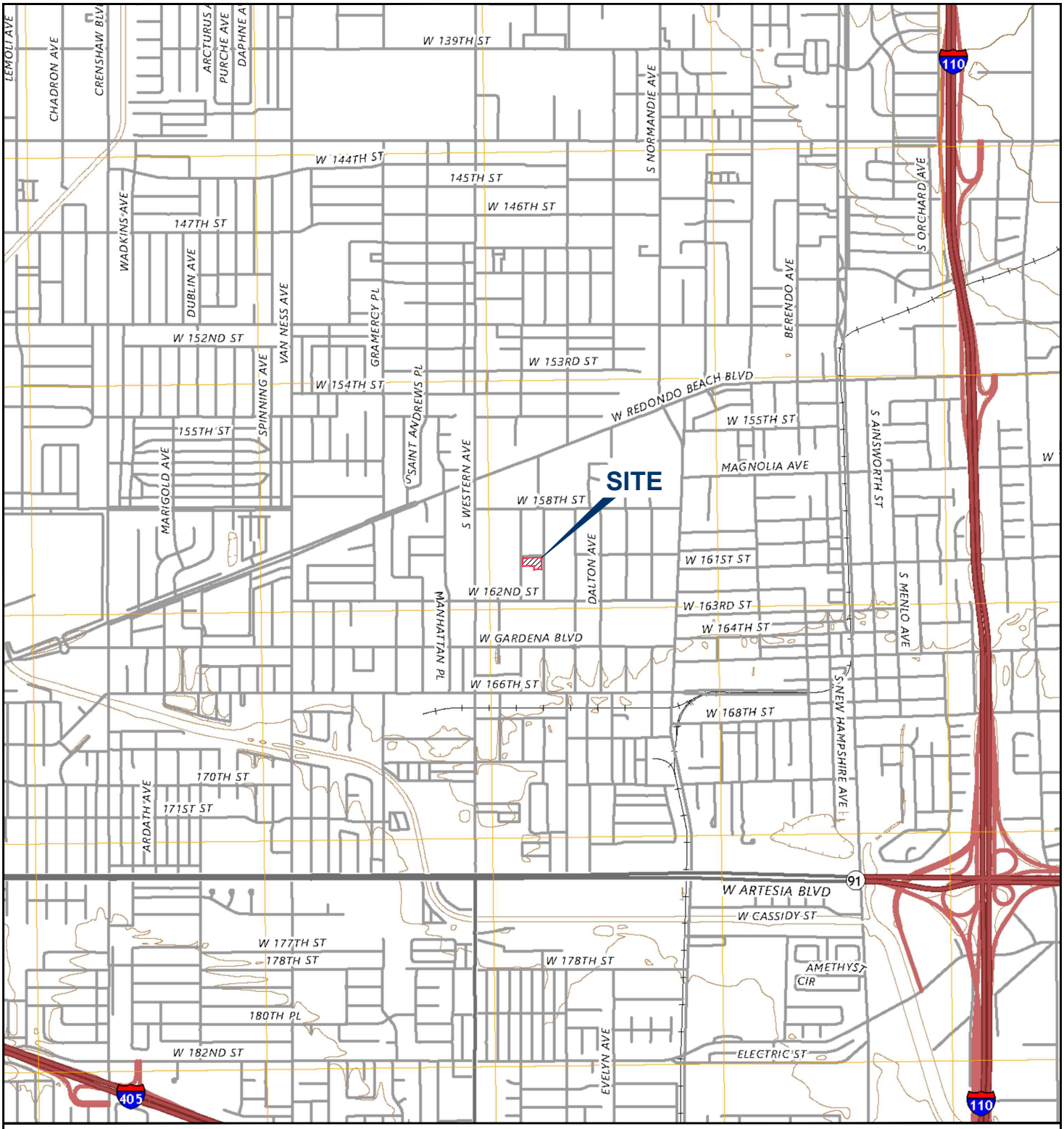

212427001.dwg_SL 10/31/2023 JDP

NOTE: DIMENSIONS, DIRECTIONS AND LOCATIONS ARE APPROXIMATE. I REFERENCE: USGS, 2023.

N

FEET
0 2,000 4,000

FIGURE 1

Ninyo & Moore
Geotechnical & Environmental Sciences Consultants

SITE LOCATION

16004 SOUTH HAVARD AVENUE
GARDENA, CALIFORNIA

212427001 I 10/23



LEGEND

SITE BOUNDARY

B2 ● SAMPLE LOCATION

NOTE: DIMENSIONS, DIRECTIONS AND LOCATIONS ARE APPROXIMATE. I REFERENCE: GOOGLE EARTH, 2023.

N

FEET

0 50 100

212427001.dwg_SSSL 10/31/2023 JDP

FIGURE 2

Ninyo & Moore

Geotechnical & Environmental Sciences Consultants

SOIL STOCKPILE SAMPLE LOCATIONS

16004 SOUTH HAVARD AVENUE
GARDENA, CALIFORNIA

212427001 I 10/23

ATTACHMENT A

Laboratory Reports

eurofins | Environment Testing

ANALYTICAL REPORT

PREPARED FOR

Attn: Prasad Thimmappa
Ninyo & Moore
475 Goddard St. Suite 200
Irvine, California 92618

Generated 10/27/2023 3:27:38 PM

JOB DESCRIPTION

Gardena Aquatic Center / 212427001

JOB NUMBER

570-158168-1

Eurofins Calscience
2841 Dow Avenue, Suite 100
Tustin CA 92780

See page two for job notes and contact information.

my EOL

Job Notes

This report may not be reproduced except in full, and with written approval from the laboratory. The results relate only to the samples tested. For questions please contact the Project Manager at the e-mail address or telephone number listed on this page.

The test results in this report relate only to the samples as received by the laboratory and will meet all requirements of the methodology, with any exceptions noted. This report shall not be reproduced except in full, without the express written approval of the laboratory. All questions should be directed to the Eurofins Calscience Project Manager.

Authorization

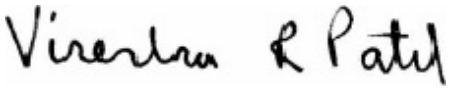

Generated
10/27/2023 3:27:38 PM

Authorized for release by
Virendra Patel, Project Manager I
Virendra.Patel@et.eurofinsus.com
(714)895-5494

Table of Contents

Cover Page 1
Table of Contents 3
Definitions/Glossary 4
Case Narrative 5
Detection Summary 6
Client Sample Results 8
Surrogate Summary 16
QC Sample Results 17
QC Association Summary 29
Lab Chronicle 31
Certification Summary 33
Method Summary 34
Sample Summary 35
Chain of Custody 36
Receipt Checklists 37

Definitions/Glossary

Client: Ninyo & Moore
Job ID: 570-158168-1
Project/Site: Gardena Aquatic Center / 212427001

Qualifiers

Metals

Qualifier	Qualifier Description
F1	MS and/or MSD recovery exceeds control limits.

Glossary

Abbreviation	These commonly used abbreviations may or may not be present in this report.
¤	Listed under the "D" column to designate that the result is reported on a dry weight basis
%R	Percent Recovery
CFL	Contains Free Liquid
CFU	Colony Forming Unit
CNF	Contains No Free Liquid
DER	Duplicate Error Ratio (normalized absolute difference)
Dil Fac	Dilution Factor
DL	Detection Limit (DoD/DOE)
DL, RA, RE, IN	Indicates a Dilution, Re-analysis, Re-extraction, or additional Initial metals/anion analysis of the sample
DLC	Decision Level Concentration (Radiochemistry)
EDL	Estimated Detection Limit (Dioxin)
LOD	Limit of Detection (DoD/DOE)
LOQ	Limit of Quantitation (DoD/DOE)
MCL	EPA recommended "Maximum Contaminant Level"
MDA	Minimum Detectable Activity (Radiochemistry)
MDC	Minimum Detectable Concentration (Radiochemistry)
MDL	Method Detection Limit
ML	Minimum Level (Dioxin)
MPN	Most Probable Number
MQL	Method Quantitation Limit
NC	Not Calculated
ND	Not Detected at the reporting limit (or MDL or EDL if shown)
NEG	Negative / Absent
POS	Positive / Present
PQL	Practical Quantitation Limit
PRES	Presumptive
QC	Quality Control
RER	Relative Error Ratio (Radiochemistry)
RL	Reporting Limit or Requested Limit (Radiochemistry)
RPD	Relative Percent Difference, a measure of the relative difference between two points
TEF	Toxicity Equivalent Factor (Dioxin)
TEQ	Toxicity Equivalent Quotient (Dioxin)
TNTC	Too Numerous To Count

Case Narrative

Client: Ninyo & Moore
Project/Site: Gardena Aquatic Center / 212427001

Job ID: 570-158168-1

Job ID: 570-158168-1

Laboratory: Eurofins Calscience

Narrative

Job Narrative
570-158168-1

Receipt
The samples were received on 10/25/2023 3:45 PM. Unless otherwise noted below, the samples arrived in good condition, and where required, properly preserved and on ice. The temperature of the cooler at receipt was 1.4º C.

GC/MS VOA
No analytical or quality issues were noted, other than those described in the Definitions/Glossary page.

GC VOA
No analytical or quality issues were noted, other than those described in the Definitions/Glossary page.

GC Semi VOA
No analytical or quality issues were noted, other than those described in the Definitions/Glossary page.

Metals
Method 6010B: The matrix spike / matrix spike duplicate (MS/MSD) recoveries for preparation batch 570-377372 and analytical batch 570-377966 were outside control limits for one or more analytes. See QC Sample Results for detail. Sample matrix interference and/or non-homogeneity are suspected because the associated laboratory control sample (LCS) recovery is within acceptance limits.

Method 7471A: The matrix spike / matrix spike duplicate (MS/MSD) recoveries for preparation batch 570-377307 and analytical batch 570-377732 were outside control limits for one or more analytes. See QC Sample Results for detail. The MSD was not spiked due to employee oversight. The associated laboratory control sample (LCS) recovery is within acceptance limits.

No additional analytical or quality issues were noted, other than those described above or in the Definitions/Glossary page.

Organic Prep
No analytical or quality issues were noted, other than those described in the Definitions/Glossary page.

VOA Prep
No analytical or quality issues were noted, other than those described in the Definitions/Glossary page.

Detection Summary

Client: Ninyo & Moore
Project/Site: Gardena Aquatic Center / 212427001

Job ID: 570-158168-1

Client Sample ID: B1-1 — Lab Sample ID: 570-158168-1

Analyte	Result	Qualifier	RL	MDL	Unit	Dil Fac	D	Method	Prep Type
Composited	yes				NONE	1		Composite	Total/NA

Client Sample ID: B1-3 — Lab Sample ID: 570-158168-2

Analyte	Result	Qualifier	RL	MDL	Unit	Dil Fac	D	Method	Prep Type
Composited	yes				NONE	1		Composite	Total/NA

Client Sample ID: B1-5 — Lab Sample ID: 570-158168-3

Analyte	Result	Qualifier	RL	MDL	Unit	Dil Fac	D	Method	Prep Type
Composited	yes				NONE	1		Composite	Total/NA

Client Sample ID: B2-1 — Lab Sample ID: 570-158168-4

Analyte	Result	Qualifier	RL	MDL	Unit	Dil Fac	D	Method	Prep Type
Composited	yes				NONE	1		Composite	Total/NA

Client Sample ID: B2-3 — Lab Sample ID: 570-158168-5

Analyte	Result	Qualifier	RL	MDL	Unit	Dil Fac	D	Method	Prep Type
Composited	yes				NONE	1		Composite	Total/NA

Client Sample ID: B2-5 — Lab Sample ID: 570-158168-6

Analyte	Result	Qualifier	RL	MDL	Unit	Dil Fac	D	Method	Prep Type
Composited	yes				NONE	1		Composite	Total/NA

Client Sample ID: COMP-1 — Lab Sample ID: 570-158168-7

Analyte	Result	Qualifier	RL	MDL	Unit	Dil Fac	D	Method	Prep Type
C6-C44	24		4.9		mg/Kg	1		8015B	Total/NA
Diesel Range Organics [C10-C28]	8.5		4.9		mg/Kg	1		8015B	Total/NA
Barium	116		3.00		mg/Kg	5		6010B	Total/NA
Chromium	16.6		1.00		mg/Kg	5		6010B	Total/NA
Cobalt	7.83		1.00		mg/Kg	5		6010B	Total/NA
Copper	14.3		2.00		mg/Kg	5		6010B	Total/NA
Lead	6.45		2.00		mg/Kg	5		6010B	Total/NA
Nickel	11.5		2.00		mg/Kg	5		6010B	Total/NA
Vanadium	35.6		1.00		mg/Kg	5		6010B	Total/NA
Zinc	45.9		5.00		mg/Kg	5		6010B	Total/NA

Client Sample ID: COMP-2 — Lab Sample ID: 570-158168-8

Analyte	Result	Qualifier	RL	MDL	Unit	Dil Fac	D	Method	Prep Type
C29-C32	7.0		5.0		mg/Kg	1		8015B	Total/NA
C6-C44	43		5.0		mg/Kg	1		8015B	Total/NA
Diesel Range Organics [C10-C28]	14		5.0		mg/Kg	1		8015B	Total/NA
Arsenic	3.16		2.99		mg/Kg	5		6010B	Total/NA
Barium	99.3		2.99		mg/Kg	5		6010B	Total/NA
Chromium	14.1		0.995		mg/Kg	5		6010B	Total/NA
Cobalt	6.64		0.995		mg/Kg	5		6010B	Total/NA
Copper	12.9		1.99		mg/Kg	5		6010B	Total/NA
Lead	7.40		1.99		mg/Kg	5		6010B	Total/NA
Nickel	9.94		1.99		mg/Kg	5		6010B	Total/NA

This Detection Summary does not include radiochemical test results.

Client Sample ID: COMP-2 (Continued)
Lab Sample ID: 570-158168-8

Analyte	Result	Qualifier	RL	MDL	Unit	Dil Fac	D	Method	Prep Type
Vanadium	32.1		0.995		mg/Kg	5		6010B	Total/NA
Zinc	43.7		4.98		mg/Kg	5		6010B	Total/NA

This Detection Summary does not include radiochemical test results.

Method: SW846 8260B - Volatile Organic Compounds (GC/MS)

Client Sample ID: B1-3
Date Collected: 10/25/23 13:02
Date Received: 10/25/23 15:45

Lab Sample ID: 570-158168-2
Matrix: Solid

Analyte	Result	Qualifier	RL	MDL	Unit	D	Prepared	Analyzed	Dil Fac
1,1,1,2-Tetrachloroethane	ND		0.98		ug/Kg		10/26/23 07:54	10/26/23 13:50	1
1,1,1-Trichloroethane	ND		0.98		ug/Kg		10/26/23 07:54	10/26/23 13:50	1
1,1,2,2-Tetrachloroethane	ND		2.0		ug/Kg		10/26/23 07:54	10/26/23 13:50	1
1,1,2-Trichloro-1,2,2-trifluoroethane	ND		9.8		ug/Kg		10/26/23 07:54	10/26/23 13:50	1
1,1,2-Trichloroethane	ND		0.98		ug/Kg		10/26/23 07:54	10/26/23 13:50	1
1,1-Dichloroethane	ND		0.98		ug/Kg		10/26/23 07:54	10/26/23 13:50	1
1,1-Dichloroethene	ND		0.98		ug/Kg		10/26/23 07:54	10/26/23 13:50	1
1,1-Dichloropropene	ND		2.0		ug/Kg		10/26/23 07:54	10/26/23 13:50	1
1,2,3-Trichlorobenzene	ND		2.0		ug/Kg		10/26/23 07:54	10/26/23 13:50	1
1,2,3-Trichloropropane	ND		2.0		ug/Kg		10/26/23 07:54	10/26/23 13:50	1
1,2,4-Trichlorobenzene	ND		2.0		ug/Kg		10/26/23 07:54	10/26/23 13:50	1
1,2,4-Trimethylbenzene	ND		2.0		ug/Kg		10/26/23 07:54	10/26/23 13:50	1
1,2-Dibromo-3-Chloropropane	ND		9.8		ug/Kg		10/26/23 07:54	10/26/23 13:50	1
1,2-Dibromoethane	ND		0.98		ug/Kg		10/26/23 07:54	10/26/23 13:50	1
1,2-Dichlorobenzene	ND		0.98		ug/Kg		10/26/23 07:54	10/26/23 13:50	1
1,2-Dichloroethane	ND		0.98		ug/Kg		10/26/23 07:54	10/26/23 13:50	1
1,2-Dichloropropane	ND		0.98		ug/Kg		10/26/23 07:54	10/26/23 13:50	1
1,3,5-Trimethylbenzene	ND		2.0		ug/Kg		10/26/23 07:54	10/26/23 13:50	1
1,3-Dichlorobenzene	ND		0.98		ug/Kg		10/26/23 07:54	10/26/23 13:50	1
1,3-Dichloropropane	ND		0.98		ug/Kg		10/26/23 07:54	10/26/23 13:50	1
1,4-Dichlorobenzene	ND		0.98		ug/Kg		10/26/23 07:54	10/26/23 13:50	1
2,2-Dichloropropane	ND		4.9		ug/Kg		10/26/23 07:54	10/26/23 13:50	1
2-Butanone (MEK)	ND		20		ug/Kg		10/26/23 07:54	10/26/23 13:50	1
2-Chlorotoluene	ND		0.98		ug/Kg		10/26/23 07:54	10/26/23 13:50	1
2-Hexanone	ND		20		ug/Kg		10/26/23 07:54	10/26/23 13:50	1
4-Chlorotoluene	ND		0.98		ug/Kg		10/26/23 07:54	10/26/23 13:50	1
4-Methyl-2-pentanone (MIBK)	ND		20		ug/Kg		10/26/23 07:54	10/26/23 13:50	1
Acetone	ND		20		ug/Kg		10/26/23 07:54	10/26/23 13:50	1
Benzene	ND		0.98		ug/Kg		10/26/23 07:54	10/26/23 13:50	1
Bromobenzene	ND		0.98		ug/Kg		10/26/23 07:54	10/26/23 13:50	1
Bromochloromethane	ND		2.0		ug/Kg		10/26/23 07:54	10/26/23 13:50	1
Bromodichloromethane	ND		0.98		ug/Kg		10/26/23 07:54	10/26/23 13:50	1
Bromoform	ND		4.9		ug/Kg		10/26/23 07:54	10/26/23 13:50	1
Bromomethane	ND		20		ug/Kg		10/26/23 07:54	10/26/23 13:50	1
cis-1,2-Dichloroethene	ND		0.98		ug/Kg		10/26/23 07:54	10/26/23 13:50	1
cis-1,3-Dichloropropene	ND		0.98		ug/Kg		10/26/23 07:54	10/26/23 13:50	1
Carbon disulfide	ND		9.8		ug/Kg		10/26/23 07:54	10/26/23 13:50	1
Carbon tetrachloride	ND		0.98		ug/Kg		10/26/23 07:54	10/26/23 13:50	1
Chlorobenzene	ND		0.98		ug/Kg		10/26/23 07:54	10/26/23 13:50	1
Chloroethane	ND		2.0		ug/Kg		10/26/23 07:54	10/26/23 13:50	1
Chloroform	ND		0.98		ug/Kg		10/26/23 07:54	10/26/23 13:50	1
Chloromethane	ND		20		ug/Kg		10/26/23 07:54	10/26/23 13:50	1
Dibromochloromethane	ND		2.0		ug/Kg		10/26/23 07:54	10/26/23 13:50	1
Dibromomethane	ND		0.98		ug/Kg		10/26/23 07:54	10/26/23 13:50	1
Dichlorodifluoromethane	ND		2.0		ug/Kg		10/26/23 07:54	10/26/23 13:50	1
Ethylbenzene	ND		0.98		ug/Kg		10/26/23 07:54	10/26/23 13:50	1
Isopropylbenzene	ND		0.98		ug/Kg		10/26/23 07:54	10/26/23 13:50	1
Methylene Chloride	ND		9.8		ug/Kg		10/26/23 07:54	10/26/23 13:50	1
Methyl-t-Butyl Ether (MTBE)	ND		2.0		ug/Kg		10/26/23 07:54	10/26/23 13:50	1

Method: SW846 8260B - Volatile Organic Compounds (GC/MS) (Continued)

Client Sample ID: B1-3
Date Collected: 10/25/23 13:02
Date Received: 10/25/23 15:45

Lab Sample ID: 570-158168-2
Matrix: Solid

Analyte	Result	Qualifier	RL	MDL	Unit	D	Prepared	Analyzed	Dil Fac
Naphthalene	ND		9.8		ug/Kg		10/26/23 07:54	10/26/23 13:50	1
n-Butylbenzene	ND		0.98		ug/Kg		10/26/23 07:54	10/26/23 13:50	1
N-Propylbenzene	ND		2.0		ug/Kg		10/26/23 07:54	10/26/23 13:50	1
o-Xylene	ND		0.98		ug/Kg		10/26/23 07:54	10/26/23 13:50	1
m,p-Xylene	ND		2.0		ug/Kg		10/26/23 07:54	10/26/23 13:50	1
p-Isopropyltoluene	ND		0.98		ug/Kg		10/26/23 07:54	10/26/23 13:50	1
sec-Butylbenzene	ND		0.98		ug/Kg		10/26/23 07:54	10/26/23 13:50	1
Styrene	ND		0.98		ug/Kg		10/26/23 07:54	10/26/23 13:50	1
trans-1,2-Dichloroethene	ND		0.98		ug/Kg		10/26/23 07:54	10/26/23 13:50	1
trans-1,3-Dichloropropene	ND		2.0		ug/Kg		10/26/23 07:54	10/26/23 13:50	1
tert-Butylbenzene	ND		0.98		ug/Kg		10/26/23 07:54	10/26/23 13:50	1
Tetrachloroethene	ND		0.98		ug/Kg		10/26/23 07:54	10/26/23 13:50	1
Toluene	ND		0.98		ug/Kg		10/26/23 07:54	10/26/23 13:50	1
Trichloroethene	ND		2.0		ug/Kg		10/26/23 07:54	10/26/23 13:50	1
Trichlorofluoromethane	ND		9.8		ug/Kg		10/26/23 07:54	10/26/23 13:50	1
Vinyl acetate	ND		9.8		ug/Kg		10/26/23 07:54	10/26/23 13:50	1
Vinyl chloride	ND		0.98		ug/Kg		10/26/23 07:54	10/26/23 13:50	1

Surrogate	*%Recovery*	*Qualifier*	*Limits*	*Prepared*	*Analyzed*	*Dil Fac*
1,2-Dichloroethane-d4 (Surr)	*104*		*32 - 179*	*10/26/23 07:54*	*10/26/23 13:50*	*1*
4-Bromofluorobenzene (Surr)	*100*		*80 - 120*	*10/26/23 07:54*	*10/26/23 13:50*	*1*
Dibromofluoromethane (Surr)	*102*		*58 - 147*	*10/26/23 07:54*	*10/26/23 13:50*	*1*
Toluene-d8 (Surr)	*104*		*80 - 120*	*10/26/23 07:54*	*10/26/23 13:50*	*1*

Client Sample ID: B2-5
Date Collected: 10/25/23 13:39
Date Received: 10/25/23 15:45

Lab Sample ID: 570-158168-6
Matrix: Solid

Analyte	Result	Qualifier	RL	MDL	Unit	D	Prepared	Analyzed	Dil Fac
1,1,1,2-Tetrachloroethane	ND		1.0		ug/Kg		10/26/23 07:54	10/26/23 14:11	1
1,1,1-Trichloroethane	ND		1.0		ug/Kg		10/26/23 07:54	10/26/23 14:11	1
1,1,2,2-Tetrachloroethane	ND		2.0		ug/Kg		10/26/23 07:54	10/26/23 14:11	1
1,1,2-Trichloro-1,2,2-trifluoroethane	ND		10		ug/Kg		10/26/23 07:54	10/26/23 14:11	1
1,1,2-Trichloroethane	ND		1.0		ug/Kg		10/26/23 07:54	10/26/23 14:11	1
1,1-Dichloroethane	ND		1.0		ug/Kg		10/26/23 07:54	10/26/23 14:11	1
1,1-Dichloroethene	ND		1.0		ug/Kg		10/26/23 07:54	10/26/23 14:11	1
1,1-Dichloropropene	ND		2.0		ug/Kg		10/26/23 07:54	10/26/23 14:11	1
1,2,3-Trichlorobenzene	ND		2.0		ug/Kg		10/26/23 07:54	10/26/23 14:11	1
1,2,3-Trichloropropane	ND		2.0		ug/Kg		10/26/23 07:54	10/26/23 14:11	1
1,2,4-Trichlorobenzene	ND		2.0		ug/Kg		10/26/23 07:54	10/26/23 14:11	1
1,2,4-Trimethylbenzene	ND		2.0		ug/Kg		10/26/23 07:54	10/26/23 14:11	1
1,2-Dibromo-3-Chloropropane	ND		10		ug/Kg		10/26/23 07:54	10/26/23 14:11	1
1,2-Dibromoethane	ND		1.0		ug/Kg		10/26/23 07:54	10/26/23 14:11	1
1,2-Dichlorobenzene	ND		1.0		ug/Kg		10/26/23 07:54	10/26/23 14:11	1
1,2-Dichloroethane	ND		1.0		ug/Kg		10/26/23 07:54	10/26/23 14:11	1
1,2-Dichloropropane	ND		1.0		ug/Kg		10/26/23 07:54	10/26/23 14:11	1
1,3,5-Trimethylbenzene	ND		2.0		ug/Kg		10/26/23 07:54	10/26/23 14:11	1
1,3-Dichlorobenzene	ND		1.0		ug/Kg		10/26/23 07:54	10/26/23 14:11	1
1,3-Dichloropropane	ND		1.0		ug/Kg		10/26/23 07:54	10/26/23 14:11	1
1,4-Dichlorobenzene	ND		1.0		ug/Kg		10/26/23 07:54	10/26/23 14:11	1
2,2-Dichloropropane	ND		5.0		ug/Kg		10/26/23 07:54	10/26/23 14:11	1

Method: SW846 8260B - Volatile Organic Compounds (GC/MS) (Continued)

Client Sample ID: B2-5
Date Collected: 10/25/23 13:39
Date Received: 10/25/23 15:45

Lab Sample ID: 570-158168-6
Matrix: Solid

Analyte	Result	Qualifier	RL	MDL	Unit	D	Prepared	Analyzed	Dil Fac
2-Butanone (MEK)	ND		20		ug/Kg		10/26/23 07:54	10/26/23 14:11	1
2-Chlorotoluene	ND		1.0		ug/Kg		10/26/23 07:54	10/26/23 14:11	1
2-Hexanone	ND		20		ug/Kg		10/26/23 07:54	10/26/23 14:11	1
4-Chlorotoluene	ND		1.0		ug/Kg		10/26/23 07:54	10/26/23 14:11	1
4-Methyl-2-pentanone (MIBK)	ND		20		ug/Kg		10/26/23 07:54	10/26/23 14:11	1
Acetone	ND		20		ug/Kg		10/26/23 07:54	10/26/23 14:11	1
Benzene	ND		1.0		ug/Kg		10/26/23 07:54	10/26/23 14:11	1
Bromobenzene	ND		1.0		ug/Kg		10/26/23 07:54	10/26/23 14:11	1
Bromochloromethane	ND		2.0		ug/Kg		10/26/23 07:54	10/26/23 14:11	1
Bromodichloromethane	ND		1.0		ug/Kg		10/26/23 07:54	10/26/23 14:11	1
Bromoform	ND		5.0		ug/Kg		10/26/23 07:54	10/26/23 14:11	1
Bromomethane	ND		20		ug/Kg		10/26/23 07:54	10/26/23 14:11	1
cis-1,2-Dichloroethene	ND		1.0		ug/Kg		10/26/23 07:54	10/26/23 14:11	1
cis-1,3-Dichloropropene	ND		1.0		ug/Kg		10/26/23 07:54	10/26/23 14:11	1
Carbon disulfide	ND		10		ug/Kg		10/26/23 07:54	10/26/23 14:11	1
Carbon tetrachloride	ND		1.0		ug/Kg		10/26/23 07:54	10/26/23 14:11	1
Chlorobenzene	ND		1.0		ug/Kg		10/26/23 07:54	10/26/23 14:11	1
Chloroethane	ND		2.0		ug/Kg		10/26/23 07:54	10/26/23 14:11	1
Chloroform	ND		1.0		ug/Kg		10/26/23 07:54	10/26/23 14:11	1
Chloromethane	ND		20		ug/Kg		10/26/23 07:54	10/26/23 14:11	1
Dibromochloromethane	ND		2.0		ug/Kg		10/26/23 07:54	10/26/23 14:11	1
Dibromomethane	ND		1.0		ug/Kg		10/26/23 07:54	10/26/23 14:11	1
Dichlorodifluoromethane	ND		2.0		ug/Kg		10/26/23 07:54	10/26/23 14:11	1
Ethylbenzene	ND		1.0		ug/Kg		10/26/23 07:54	10/26/23 14:11	1
Isopropylbenzene	ND		1.0		ug/Kg		10/26/23 07:54	10/26/23 14:11	1
Methylene Chloride	ND		10		ug/Kg		10/26/23 07:54	10/26/23 14:11	1
Methyl-t-Butyl Ether (MTBE)	ND		2.0		ug/Kg		10/26/23 07:54	10/26/23 14:11	1
Naphthalene	ND		10		ug/Kg		10/26/23 07:54	10/26/23 14:11	1
n-Butylbenzene	ND		1.0		ug/Kg		10/26/23 07:54	10/26/23 14:11	1
N-Propylbenzene	ND		2.0		ug/Kg		10/26/23 07:54	10/26/23 14:11	1
o-Xylene	ND		1.0		ug/Kg		10/26/23 07:54	10/26/23 14:11	1
m,p-Xylene	ND		2.0		ug/Kg		10/26/23 07:54	10/26/23 14:11	1
p-Isopropyltoluene	ND		1.0		ug/Kg		10/26/23 07:54	10/26/23 14:11	1
sec-Butylbenzene	ND		1.0		ug/Kg		10/26/23 07:54	10/26/23 14:11	1
Styrene	ND		1.0		ug/Kg		10/26/23 07:54	10/26/23 14:11	1
trans-1,2-Dichloroethene	ND		1.0		ug/Kg		10/26/23 07:54	10/26/23 14:11	1
trans-1,3-Dichloropropene	ND		2.0		ug/Kg		10/26/23 07:54	10/26/23 14:11	1
tert-Butylbenzene	ND		1.0		ug/Kg		10/26/23 07:54	10/26/23 14:11	1
Tetrachloroethene	ND		1.0		ug/Kg		10/26/23 07:54	10/26/23 14:11	1
Toluene	ND		1.0		ug/Kg		10/26/23 07:54	10/26/23 14:11	1
Trichloroethene	ND		2.0		ug/Kg		10/26/23 07:54	10/26/23 14:11	1
Trichlorofluoromethane	ND		10		ug/Kg		10/26/23 07:54	10/26/23 14:11	1
Vinyl acetate	ND		10		ug/Kg		10/26/23 07:54	10/26/23 14:11	1
Vinyl chloride	ND		1.0		ug/Kg		10/26/23 07:54	10/26/23 14:11	1

Surrogate	*%Recovery*	*Qualifier*	*Limits*	*Prepared*	*Analyzed*	*Dil Fac*
1,2-Dichloroethane-d4 (Surr)	*103*		*32 - 179*	*10/26/23 07:54*	*10/26/23 14:11*	*1*
4-Bromofluorobenzene (Surr)	*101*		*80 - 120*	*10/26/23 07:54*	*10/26/23 14:11*	*1*
Dibromofluoromethane (Surr)	*103*		*58 - 147*	*10/26/23 07:54*	*10/26/23 14:11*	*1*
Toluene-d8 (Surr)	*104*		*80 - 120*	*10/26/23 07:54*	*10/26/23 14:11*	*1*

Client: Ninyo & Moore
Job ID: 570-158168-1
Project/Site: Gardena Aquatic Center / 212427001

Method: SW846 8015B - Gasoline Range Organics - (GC)

Client Sample ID: B1-3
Date Collected: 10/25/23 13:02
Date Received: 10/25/23 15:45
Lab Sample ID: 570-158168-2
Matrix: Solid

Analyte	Result	Qualifier	RL	MDL	Unit	D	Prepared	Analyzed	Dil Fac
Gasoline Range Organics (C4-C12)	ND		0.099		mg/Kg		10/26/23 11:59	10/26/23 13:35	1

Surrogate	*%Recovery*	*Qualifier*	*Limits*	*Prepared*	*Analyzed*	*Dil Fac*
4-Bromofluorobenzene (Surr)	*108*		*42 - 126*	*10/26/23 11:59*	*10/26/23 13:35*	*1*

Client Sample ID: B2-5
Date Collected: 10/25/23 13:39
Date Received: 10/25/23 15:45
Lab Sample ID: 570-158168-6
Matrix: Solid

Analyte	Result	Qualifier	RL	MDL	Unit	D	Prepared	Analyzed	Dil Fac
Gasoline Range Organics (C4-C12)	ND		0.097		mg/Kg		10/26/23 11:59	10/26/23 13:55	1

Surrogate	*%Recovery*	*Qualifier*	*Limits*	*Prepared*	*Analyzed*	*Dil Fac*
4-Bromofluorobenzene (Surr)	*109*		*42 - 126*	*10/26/23 11:59*	*10/26/23 13:55*	*1*

Method: SW846 8015B - Diesel Range Organics (DRO) (GC)

Client Sample ID: COMP-1
Date Collected: 10/25/23 00:00
Date Received: 10/25/23 15:45

Lab Sample ID: 570-158168-7
Matrix: Solid

Analyte	Result	Qualifier	RL	MDL	Unit	D	Prepared	Analyzed	Dil Fac
C6 as C6	ND		4.9		mg/Kg		10/25/23 21:00	10/27/23 01:13	1
C7 as C7	ND		4.9		mg/Kg		10/25/23 21:00	10/27/23 01:13	1
C8 as C8	ND		4.9		mg/Kg		10/25/23 21:00	10/27/23 01:13	1
C9-C10	ND		4.9		mg/Kg		10/25/23 21:00	10/27/23 01:13	1
C11-C12	ND		4.9		mg/Kg		10/25/23 21:00	10/27/23 01:13	1
C13-C14	ND		4.9		mg/Kg		10/25/23 21:00	10/27/23 01:13	1
C15-C16	ND		4.9		mg/Kg		10/25/23 21:00	10/27/23 01:13	1
C17-C18	ND		4.9		mg/Kg		10/25/23 21:00	10/27/23 01:13	1
C19-C20	ND		4.9		mg/Kg		10/25/23 21:00	10/27/23 01:13	1
C21-C22	ND		4.9		mg/Kg		10/25/23 21:00	10/27/23 01:13	1
C23-C24	ND		4.9		mg/Kg		10/25/23 21:00	10/27/23 01:13	1
C25-C28	ND		4.9		mg/Kg		10/25/23 21:00	10/27/23 01:13	1
C29-C32	ND		4.9		mg/Kg		10/25/23 21:00	10/27/23 01:13	1
C33-C36	ND		4.9		mg/Kg		10/25/23 21:00	10/27/23 01:13	1
C37-C40	ND		4.9		mg/Kg		10/25/23 21:00	10/27/23 01:13	1
C41-C44	ND		4.9		mg/Kg		10/25/23 21:00	10/27/23 01:13	1
C6-C44	**24**		4.9		mg/Kg		10/25/23 21:00	10/27/23 01:13	1
Diesel Range Organics [C10-C28]	**8.5**		4.9		mg/Kg		10/25/23 21:00	10/27/23 01:13	1

Surrogate	*%Recovery*	*Qualifier*	*Limits*	*Prepared*	*Analyzed*	*Dil Fac*
n-Octacosane (Surr)	*112*		*60 - 138*	*10/25/23 21:00*	*10/27/23 01:13*	*1*

Client Sample ID: COMP-2
Date Collected: 10/25/23 00:00
Date Received: 10/25/23 15:45

Lab Sample ID: 570-158168-8
Matrix: Solid

Analyte	Result	Qualifier	RL	MDL	Unit	D	Prepared	Analyzed	Dil Fac
C6 as C6	ND		5.0		mg/Kg		10/25/23 21:00	10/27/23 01:34	1
C7 as C7	ND		5.0		mg/Kg		10/25/23 21:00	10/27/23 01:34	1
C8 as C8	ND		5.0		mg/Kg		10/25/23 21:00	10/27/23 01:34	1
C9-C10	ND		5.0		mg/Kg		10/25/23 21:00	10/27/23 01:34	1
C11-C12	ND		5.0		mg/Kg		10/25/23 21:00	10/27/23 01:34	1
C13-C14	ND		5.0		mg/Kg		10/25/23 21:00	10/27/23 01:34	1
C15-C16	ND		5.0		mg/Kg		10/25/23 21:00	10/27/23 01:34	1
C17-C18	ND		5.0		mg/Kg		10/25/23 21:00	10/27/23 01:34	1
C19-C20	ND		5.0		mg/Kg		10/25/23 21:00	10/27/23 01:34	1
C21-C22	ND		5.0		mg/Kg		10/25/23 21:00	10/27/23 01:34	1
C23-C24	ND		5.0		mg/Kg		10/25/23 21:00	10/27/23 01:34	1
C25-C28	ND		5.0		mg/Kg		10/25/23 21:00	10/27/23 01:34	1
C29-C32	**7.0**		5.0		mg/Kg		10/25/23 21:00	10/27/23 01:34	1
C33-C36	ND		5.0		mg/Kg		10/25/23 21:00	10/27/23 01:34	1
C37-C40	ND		5.0		mg/Kg		10/25/23 21:00	10/27/23 01:34	1
C41-C44	ND		5.0		mg/Kg		10/25/23 21:00	10/27/23 01:34	1
C6-C44	**43**		5.0		mg/Kg		10/25/23 21:00	10/27/23 01:34	1
Diesel Range Organics [C10-C28]	**14**		5.0		mg/Kg		10/25/23 21:00	10/27/23 01:34	1

Surrogate	*%Recovery*	*Qualifier*	*Limits*	*Prepared*	*Analyzed*	*Dil Fac*
n-Octacosane (Surr)	*116*		*60 - 138*	*10/25/23 21:00*	*10/27/23 01:34*	*1*

Method: SW846 6010B - Metals (ICP)

Client Sample ID: COMP-1
Lab Sample ID: 570-158168-7
Date Collected: 10/25/23 00:00
Matrix: Solid
Date Received: 10/25/23 15:45

Analyte	Result	Qualifier	RL	MDL	Unit	D	Prepared	Analyzed	Dil Fac
Antimony	ND		10.0		mg/Kg		10/26/23 09:00	10/27/23 13:02	5
Arsenic	ND		3.00		mg/Kg		10/26/23 09:00	10/27/23 13:02	5
Barium	**116**		3.00		mg/Kg		10/26/23 09:00	10/27/23 13:02	5
Beryllium	ND		0.500		mg/Kg		10/26/23 09:00	10/27/23 13:02	5
Cadmium	ND		0.500		mg/Kg		10/26/23 09:00	10/27/23 13:02	5
Chromium	**16.6**		1.00		mg/Kg		10/26/23 09:00	10/27/23 13:02	5
Cobalt	**7.83**		1.00		mg/Kg		10/26/23 09:00	10/27/23 13:02	5
Copper	**14.3**		2.00		mg/Kg		10/26/23 09:00	10/27/23 13:02	5
Lead	**6.45**		2.00		mg/Kg		10/26/23 09:00	10/27/23 13:02	5
Molybdenum	ND		2.00		mg/Kg		10/26/23 09:00	10/27/23 13:02	5
Nickel	**11.5**		2.00		mg/Kg		10/26/23 09:00	10/27/23 13:02	5
Selenium	ND		3.00		mg/Kg		10/26/23 09:00	10/27/23 13:02	5
Silver	ND		1.50		mg/Kg		10/26/23 09:00	10/27/23 13:02	5
Thallium	ND		10.0		mg/Kg		10/26/23 09:00	10/27/23 13:02	5
Vanadium	**35.6**		1.00		mg/Kg		10/26/23 09:00	10/27/23 13:02	5
Zinc	**45.9**		5.00		mg/Kg		10/26/23 09:00	10/27/23 13:02	5

Client Sample ID: COMP-2
Lab Sample ID: 570-158168-8
Date Collected: 10/25/23 00:00
Matrix: Solid
Date Received: 10/25/23 15:45

Analyte	Result	Qualifier	RL	MDL	Unit	D	Prepared	Analyzed	Dil Fac
Antimony	ND		9.95		mg/Kg		10/26/23 10:00	10/27/23 13:38	5
Arsenic	**3.16**		2.99		mg/Kg		10/26/23 10:00	10/27/23 13:38	5
Barium	**99.3**		2.99		mg/Kg		10/26/23 10:00	10/27/23 13:38	5
Beryllium	ND		0.498		mg/Kg		10/26/23 10:00	10/27/23 13:38	5
Cadmium	ND		0.498		mg/Kg		10/26/23 10:00	10/27/23 13:38	5
Chromium	**14.1**		0.995		mg/Kg		10/26/23 10:00	10/27/23 13:38	5
Cobalt	**6.64**		0.995		mg/Kg		10/26/23 10:00	10/27/23 13:38	5
Copper	**12.9**		1.99		mg/Kg		10/26/23 10:00	10/27/23 13:38	5
Lead	**7.40**		1.99		mg/Kg		10/26/23 10:00	10/27/23 13:38	5
Molybdenum	ND		1.99		mg/Kg		10/26/23 10:00	10/27/23 13:38	5
Nickel	**9.94**		1.99		mg/Kg		10/26/23 10:00	10/27/23 13:38	5
Selenium	ND		2.99		mg/Kg		10/26/23 10:00	10/27/23 13:38	5
Silver	ND		1.49		mg/Kg		10/26/23 10:00	10/27/23 13:38	5
Thallium	ND		9.95		mg/Kg		10/26/23 10:00	10/27/23 13:38	5
Vanadium	**32.1**		0.995		mg/Kg		10/26/23 10:00	10/27/23 13:38	5
Zinc	**43.7**		4.98		mg/Kg		10/26/23 10:00	10/27/23 13:38	5

Client: Ninyo & Moore
Job ID: 570-158168-1
Project/Site: Gardena Aquatic Center / 212427001

Method: SW846 7471A - Mercury (CVAA)

Client Sample ID: COMP-1
Date Collected: 10/25/23 00:00
Date Received: 10/25/23 15:45
Lab Sample ID: 570-158168-7
Matrix: Solid

Analyte	Result	Qualifier	RL	MDL	Unit	D	Prepared	Analyzed	Dil Fac
Mercury	ND		0.0786		mg/Kg		10/25/23 19:42	10/26/23 21:38	1

Client Sample ID: COMP-2
Date Collected: 10/25/23 00:00
Date Received: 10/25/23 15:45
Lab Sample ID: 570-158168-8
Matrix: Solid

Analyte	Result	Qualifier	RL	MDL	Unit	D	Prepared	Analyzed	Dil Fac
Mercury	ND		0.0801		mg/Kg		10/25/23 19:42	10/26/23 21:40	1

Client: Ninyo & Moore
Project/Site: Gardena Aquatic Center / 212427001

Job ID: 570-158168-1

Method: Composite - Sample Compositing

Client Sample ID: B1-1
Date Collected: 10/25/23 12:57
Date Received: 10/25/23 15:45

Lab Sample ID: 570-158168-1
Matrix: Solid

Analyte	Result	Qualifier	RL	MDL	Unit	D	Prepared	Analyzed	Dil Fac
Composited	yes				NONE			10/26/23 09:54	1

Client Sample ID: B1-3
Date Collected: 10/25/23 13:02
Date Received: 10/25/23 15:45

Lab Sample ID: 570-158168-2
Matrix: Solid

Analyte	Result	Qualifier	RL	MDL	Unit	D	Prepared	Analyzed	Dil Fac
Composited	yes				NONE			10/26/23 09:54	1

Client Sample ID: B1-5
Date Collected: 10/25/23 13:09
Date Received: 10/25/23 15:45

Lab Sample ID: 570-158168-3
Matrix: Solid

Analyte	Result	Qualifier	RL	MDL	Unit	D	Prepared	Analyzed	Dil Fac
Composited	yes				NONE			10/26/23 09:54	1

Client Sample ID: B2-1
Date Collected: 10/25/23 13:21
Date Received: 10/25/23 15:45

Lab Sample ID: 570-158168-4
Matrix: Solid

Analyte	Result	Qualifier	RL	MDL	Unit	D	Prepared	Analyzed	Dil Fac
Composited	yes				NONE			10/26/23 09:54	1

Client Sample ID: B2-3
Date Collected: 10/25/23 13:27
Date Received: 10/25/23 15:45

Lab Sample ID: 570-158168-5
Matrix: Solid

Analyte	Result	Qualifier	RL	MDL	Unit	D	Prepared	Analyzed	Dil Fac
Composited	yes				NONE			10/26/23 09:54	1

Client Sample ID: B2-5
Date Collected: 10/25/23 13:39
Date Received: 10/25/23 15:45

Lab Sample ID: 570-158168-6
Matrix: Solid

Analyte	Result	Qualifier	RL	MDL	Unit	D	Prepared	Analyzed	Dil Fac
Composited	yes				NONE			10/26/23 09:54	1

Surrogate Summary

Client: Ninyo & Moore
Project/Site: Gardena Aquatic Center / 212427001

Job ID: 570-158168-1

Method: 8260B - Volatile Organic Compounds (GC/MS)

Matrix: Solid **Prep Type: Total/NA**

		Percent Surrogate Recovery (Acceptance Limits)			
		DCA	BFB	DBFM	TOL
Lab Sample ID	Client Sample ID	(32-179)	(80-120)	(58-147)	(80-120)
570-158168-2	B1-3	104	100	102	104
570-158168-6	B2-5	103	101	103	104
570-158209-C-1-B MS	Matrix Spike	105	101	103	101
570-158209-C-1-C MSD	Matrix Spike Duplicate	104	99	103	100
LCS 570-377400/1-A	Lab Control Sample	97	100	98	99
LCSD 570-377400/2-A	Lab Control Sample Dup	99	98	99	100
MB 570-377400/5-A	Method Blank	97	102	97	105

Surrogate Legend

DCA = 1,2-Dichloroethane-d4 (Surr)
BFB = 4-Bromofluorobenzene (Surr)
DBFM = Dibromofluoromethane (Surr)
TOL = Toluene-d8 (Surr)

Method: 8015B - Gasoline Range Organics - (GC)

Matrix: Solid **Prep Type: Total/NA**

		Percent Surrogate Recovery (Acceptance Limits)
		BFB1
Lab Sample ID	Client Sample ID	(42-126)
570-158168-2	B1-3	108
570-158168-6	B2-5	109
570-158261-A-2-C MS	Matrix Spike	110
570-158261-A-2-D MSD	Matrix Spike Duplicate	106
LCS 570-377514/1-A	Lab Control Sample	109
LCSD 570-377514/2-A	Lab Control Sample Dup	102
MB 570-377514/3-A	Method Blank	106

Surrogate Legend

BFB = 4-Bromofluorobenzene (Surr)

Method: 8015B - Diesel Range Organics (DRO) (GC)

Matrix: Solid **Prep Type: Total/NA**

		Percent Surrogate Recovery (Acceptance Limits)
		OTCSN1
Lab Sample ID	Client Sample ID	(60-138)
570-158168-7	COMP-1	112
570-158168-8	COMP-2	116

Surrogate Legend

OTCSN = n-Octacosane (Surr)

Method: 8260B - Volatile Organic Compounds (GC/MS)

Lab Sample ID: MB 570-377400/5-A
Matrix: Solid
Analysis Batch: 377402

Client Sample ID: Method Blank
Prep Type: Total/NA
Prep Batch: 377400

Analyte	MB Result	MB Qualifier	RL	MDL	Unit	D	Prepared	Analyzed	Dil Fac
1,1,1,2-Tetrachloroethane	ND		1.0		ug/Kg		10/26/23 07:54	10/26/23 10:35	1
1,1,1-Trichloroethane	ND		1.0		ug/Kg		10/26/23 07:54	10/26/23 10:35	1
1,1,2,2-Tetrachloroethane	ND		2.0		ug/Kg		10/26/23 07:54	10/26/23 10:35	1
1,1,2-Trichloro-1,2,2-trifluoroethane	ND		10		ug/Kg		10/26/23 07:54	10/26/23 10:35	1
1,1,2-Trichloroethane	ND		1.0		ug/Kg		10/26/23 07:54	10/26/23 10:35	1
1,1-Dichloroethane	ND		1.0		ug/Kg		10/26/23 07:54	10/26/23 10:35	1
1,1-Dichloroethene	ND		1.0		ug/Kg		10/26/23 07:54	10/26/23 10:35	1
1,1-Dichloropropene	ND		2.0		ug/Kg		10/26/23 07:54	10/26/23 10:35	1
1,2,3-Trichlorobenzene	ND		2.0		ug/Kg		10/26/23 07:54	10/26/23 10:35	1
1,2,3-Trichloropropane	ND		2.0		ug/Kg		10/26/23 07:54	10/26/23 10:35	1
1,2,4-Trichlorobenzene	ND		2.0		ug/Kg		10/26/23 07:54	10/26/23 10:35	1
1,2,4-Trimethylbenzene	ND		2.0		ug/Kg		10/26/23 07:54	10/26/23 10:35	1
1,2-Dibromo-3-Chloropropane	ND		10		ug/Kg		10/26/23 07:54	10/26/23 10:35	1
1,2-Dibromoethane	ND		1.0		ug/Kg		10/26/23 07:54	10/26/23 10:35	1
1,2-Dichlorobenzene	ND		1.0		ug/Kg		10/26/23 07:54	10/26/23 10:35	1
1,2-Dichloroethane	ND		1.0		ug/Kg		10/26/23 07:54	10/26/23 10:35	1
1,2-Dichloropropane	ND		1.0		ug/Kg		10/26/23 07:54	10/26/23 10:35	1
1,3,5-Trimethylbenzene	ND		2.0		ug/Kg		10/26/23 07:54	10/26/23 10:35	1
1,3-Dichlorobenzene	ND		1.0		ug/Kg		10/26/23 07:54	10/26/23 10:35	1
1,3-Dichloropropane	ND		1.0		ug/Kg		10/26/23 07:54	10/26/23 10:35	1
1,4-Dichlorobenzene	ND		1.0		ug/Kg		10/26/23 07:54	10/26/23 10:35	1
2,2-Dichloropropane	ND		5.0		ug/Kg		10/26/23 07:54	10/26/23 10:35	1
2-Butanone (MEK)	ND		20		ug/Kg		10/26/23 07:54	10/26/23 10:35	1
2-Chlorotoluene	ND		1.0		ug/Kg		10/26/23 07:54	10/26/23 10:35	1
2-Hexanone	ND		20		ug/Kg		10/26/23 07:54	10/26/23 10:35	1
4-Chlorotoluene	ND		1.0		ug/Kg		10/26/23 07:54	10/26/23 10:35	1
4-Methyl-2-pentanone (MIBK)	ND		20		ug/Kg		10/26/23 07:54	10/26/23 10:35	1
Acetone	ND		20		ug/Kg		10/26/23 07:54	10/26/23 10:35	1
Benzene	ND		1.0		ug/Kg		10/26/23 07:54	10/26/23 10:35	1
Bromobenzene	ND		1.0		ug/Kg		10/26/23 07:54	10/26/23 10:35	1
Bromochloromethane	ND		2.0		ug/Kg		10/26/23 07:54	10/26/23 10:35	1
Bromodichloromethane	ND		1.0		ug/Kg		10/26/23 07:54	10/26/23 10:35	1
Bromoform	ND		5.0		ug/Kg		10/26/23 07:54	10/26/23 10:35	1
Bromomethane	ND		20		ug/Kg		10/26/23 07:54	10/26/23 10:35	1
cis-1,2-Dichloroethene	ND		1.0		ug/Kg		10/26/23 07:54	10/26/23 10:35	1
cis-1,3-Dichloropropene	ND		1.0		ug/Kg		10/26/23 07:54	10/26/23 10:35	1
Carbon disulfide	ND		10		ug/Kg		10/26/23 07:54	10/26/23 10:35	1
Carbon tetrachloride	ND		1.0		ug/Kg		10/26/23 07:54	10/26/23 10:35	1
Chlorobenzene	ND		1.0		ug/Kg		10/26/23 07:54	10/26/23 10:35	1
Chloroethane	ND		2.0		ug/Kg		10/26/23 07:54	10/26/23 10:35	1
Chloroform	ND		1.0		ug/Kg		10/26/23 07:54	10/26/23 10:35	1
Chloromethane	ND		20		ug/Kg		10/26/23 07:54	10/26/23 10:35	1
Dibromochloromethane	ND		2.0		ug/Kg		10/26/23 07:54	10/26/23 10:35	1
Dibromomethane	ND		1.0		ug/Kg		10/26/23 07:54	10/26/23 10:35	1
Dichlorodifluoromethane	ND		2.0		ug/Kg		10/26/23 07:54	10/26/23 10:35	1
Ethylbenzene	ND		1.0		ug/Kg		10/26/23 07:54	10/26/23 10:35	1
Isopropylbenzene	ND		1.0		ug/Kg		10/26/23 07:54	10/26/23 10:35	1
Methylene Chloride	ND		10		ug/Kg		10/26/23 07:54	10/26/23 10:35	1

Method: 8260B - Volatile Organic Compounds (GC/MS) (Continued)

Lab Sample ID: MB 570-377400/5-A
Matrix: Solid
Analysis Batch: 377402

Client Sample ID: Method Blank
Prep Type: Total/NA
Prep Batch: 377400

Analyte	MB Result	MB Qualifier	RL	MDL	Unit	D	Prepared	Analyzed	Dil Fac
Methyl-t-Butyl Ether (MTBE)	ND		2.0		ug/Kg		10/26/23 07:54	10/26/23 10:35	1
Naphthalene	ND		10		ug/Kg		10/26/23 07:54	10/26/23 10:35	1
n-Butylbenzene	ND		1.0		ug/Kg		10/26/23 07:54	10/26/23 10:35	1
N-Propylbenzene	ND		2.0		ug/Kg		10/26/23 07:54	10/26/23 10:35	1
o-Xylene	ND		1.0		ug/Kg		10/26/23 07:54	10/26/23 10:35	1
m,p-Xylene	ND		2.0		ug/Kg		10/26/23 07:54	10/26/23 10:35	1
p-Isopropyltoluene	ND		1.0		ug/Kg		10/26/23 07:54	10/26/23 10:35	1
sec-Butylbenzene	ND		1.0		ug/Kg		10/26/23 07:54	10/26/23 10:35	1
Styrene	ND		1.0		ug/Kg		10/26/23 07:54	10/26/23 10:35	1
trans-1,2-Dichloroethene	ND		1.0		ug/Kg		10/26/23 07:54	10/26/23 10:35	1
trans-1,3-Dichloropropene	ND		2.0		ug/Kg		10/26/23 07:54	10/26/23 10:35	1
tert-Butylbenzene	ND		1.0		ug/Kg		10/26/23 07:54	10/26/23 10:35	1
Tetrachloroethene	ND		1.0		ug/Kg		10/26/23 07:54	10/26/23 10:35	1
Toluene	ND		1.0		ug/Kg		10/26/23 07:54	10/26/23 10:35	1
Trichloroethene	ND		2.0		ug/Kg		10/26/23 07:54	10/26/23 10:35	1
Trichlorofluoromethane	ND		10		ug/Kg		10/26/23 07:54	10/26/23 10:35	1
Vinyl acetate	ND		10		ug/Kg		10/26/23 07:54	10/26/23 10:35	1
Vinyl chloride	ND		1.0		ug/Kg		10/26/23 07:54	10/26/23 10:35	1

Surrogate	*MB %Recovery*	*MB Qualifier*	*Limits*	*Prepared*	*Analyzed*	*Dil Fac*
1,2-Dichloroethane-d4 (Surr)	*97*		*32 - 179*	*10/26/23 07:54*	*10/26/23 10:35*	*1*
4-Bromofluorobenzene (Surr)	*102*		*80 - 120*	*10/26/23 07:54*	*10/26/23 10:35*	*1*
Dibromofluoromethane (Surr)	*97*		*58 - 147*	*10/26/23 07:54*	*10/26/23 10:35*	*1*
Toluene-d8 (Surr)	*105*		*80 - 120*	*10/26/23 07:54*	*10/26/23 10:35*	*1*

Lab Sample ID: LCS 570-377400/1-A
Matrix: Solid
Analysis Batch: 377402

Client Sample ID: Lab Control Sample
Prep Type: Total/NA
Prep Batch: 377400

Analyte	Spike Added	LCS Result	LCS Qualifier	Unit	D	%Rec	%Rec Limits
1,1,1,2-Tetrachloroethane	50.0	48.08		ug/Kg		96	80 - 125
1,1,1-Trichloroethane	50.0	50.41		ug/Kg		101	78 - 130
1,1,2,2-Tetrachloroethane	50.0	51.55		ug/Kg		103	80 - 124
1,1,2-Trichloro-1,2,2-trifluoroethane	50.0	53.98		ug/Kg		108	73 - 130
1,1,2-Trichloroethane	50.0	49.39		ug/Kg		99	80 - 123
1,1-Dichloroethane	50.0	49.96		ug/Kg		100	79 - 124
1,1-Dichloroethene	50.0	50.92		ug/Kg		102	74 - 132
1,1-Dichloropropene	50.0	51.39		ug/Kg		103	78 - 130
1,2,3-Trichlorobenzene	50.0	52.35		ug/Kg		105	80 - 123
1,2,3-Trichloropropane	50.0	49.54		ug/Kg		99	79 - 120
1,2,4-Trichlorobenzene	50.0	56.23		ug/Kg		112	80 - 125
1,2,4-Trimethylbenzene	50.0	51.28		ug/Kg		103	80 - 124
1,2-Dibromo-3-Chloropropane	50.0	45.04		ug/Kg		90	67 - 120
1,2-Dibromoethane	50.0	46.57		ug/Kg		93	80 - 120
1,2-Dichlorobenzene	50.0	52.75		ug/Kg		106	80 - 120
1,2-Dichloroethane	50.0	45.59		ug/Kg		91	77 - 120
1,2-Dichloropropane	50.0	49.88		ug/Kg		100	80 - 126
1,3,5-Trimethylbenzene	50.0	51.57		ug/Kg		103	80 - 121

Client: Ninyo & Moore
Project/Site: Gardena Aquatic Center / 212427001

Job ID: 570-158168-1

Method: 8260B - Volatile Organic Compounds (GC/MS) (Continued)

Lab Sample ID: LCS 570-377400/1-A
Matrix: Solid
Analysis Batch: 377402

Client Sample ID: Lab Control Sample
Prep Type: Total/NA
Prep Batch: 377400

Analyte	Spike Added	LCS Result	LCS Qualifier	Unit	D	%Rec	%Rec Limits
1,3-Dichlorobenzene	50.0	51.46		ug/Kg		103	80 - 120
1,3-Dichloropropane	50.0	51.42		ug/Kg		103	80 - 120
1,4-Dichlorobenzene	50.0	51.48		ug/Kg		103	80 - 120
2,2-Dichloropropane	50.0	51.07		ug/Kg		102	73 - 135
2-Butanone (MEK)	50.0	49.42		ug/Kg		99	67 - 136
2-Chlorotoluene	50.0	52.81		ug/Kg		106	80 - 120
2-Hexanone	50.0	47.19		ug/Kg		94	70 - 137
4-Chlorotoluene	50.0	51.96		ug/Kg		104	80 - 121
4-Methyl-2-pentanone (MIBK)	50.0	47.52		ug/Kg		95	74 - 124
Acetone	50.0	45.05		ug/Kg		90	61 - 142
Benzene	50.0	50.06		ug/Kg		100	80 - 120
Bromobenzene	50.0	51.26		ug/Kg		103	80 - 120
Bromochloromethane	50.0	50.54		ug/Kg		101	80 - 120
Bromodichloromethane	50.0	49.42		ug/Kg		99	80 - 125
Bromoform	50.0	46.76		ug/Kg		94	74 - 138
Bromomethane	50.0	41.26		ug/Kg		83	58 - 136
cis-1,2-Dichloroethene	50.0	51.23		ug/Kg		102	80 - 124
cis-1,3-Dichloropropene	50.0	44.79		ug/Kg		90	80 - 123
Carbon disulfide	50.0	51.58		ug/Kg		103	68 - 128
Carbon tetrachloride	50.0	47.75		ug/Kg		95	75 - 140
Chlorobenzene	50.0	51.43		ug/Kg		103	80 - 120
Chloroethane	50.0	46.97		ug/Kg		94	76 - 137
Chloroform	50.0	49.48		ug/Kg		99	80 - 121
Chloromethane	50.0	46.61		ug/Kg		93	74 - 133
Dibromochloromethane	50.0	47.34		ug/Kg		95	80 - 132
Dibromomethane	50.0	47.97		ug/Kg		96	80 - 120
Dichlorodifluoromethane	50.0	41.86		ug/Kg		84	63 - 146
Ethylbenzene	50.0	51.46		ug/Kg		103	80 - 120
Isopropylbenzene	50.0	56.05		ug/Kg		112	80 - 122
Methylene Chloride	50.0	48.83		ug/Kg		98	74 - 120
Methyl-t-Butyl Ether (MTBE)	50.0	49.71		ug/Kg		99	79 - 123
Naphthalene	50.0	49.96		ug/Kg		100	79 - 121
n-Butylbenzene	50.0	54.95		ug/Kg		110	79 - 131
N-Propylbenzene	50.0	53.23		ug/Kg		106	80 - 122
o-Xylene	50.0	50.84		ug/Kg		102	80 - 120
m,p-Xylene	100	99.72		ug/Kg		100	80 - 120
p-Isopropyltoluene	50.0	53.85		ug/Kg		108	80 - 126
sec-Butylbenzene	50.0	53.97		ug/Kg		108	80 - 125
Styrene	50.0	51.65		ug/Kg		103	80 - 120
trans-1,2-Dichloroethene	50.0	51.49		ug/Kg		103	75 - 123
trans-1,3-Dichloropropene	50.0	51.93		ug/Kg		104	80 - 124
tert-Butylbenzene	50.0	53.66		ug/Kg		107	80 - 124
Tetrachloroethene	50.0	52.39		ug/Kg		105	80 - 122
Toluene	50.0	50.49		ug/Kg		101	80 - 120
Trichloroethene	50.0	50.25		ug/Kg		100	80 - 127
Trichlorofluoromethane	50.0	45.60		ug/Kg		91	70 - 144
Vinyl acetate	50.0	45.35		ug/Kg		91	71 - 125
Vinyl chloride	50.0	45.65		ug/Kg		91	79 - 133

Method: 8260B - Volatile Organic Compounds (GC/MS) (Continued)

Lab Sample ID: LCS 570-377400/1-A
Matrix: Solid
Analysis Batch: 377402

Client Sample ID: Lab Control Sample
Prep Type: Total/NA
Prep Batch: 377400

Surrogate	LCS %Recovery	LCS Qualifier	Limits
1,2-Dichloroethane-d4 (Surr)	97		32 - 179
4-Bromofluorobenzene (Surr)	100		80 - 120
Dibromofluoromethane (Surr)	98		58 - 147
Toluene-d8 (Surr)	99		80 - 120

Lab Sample ID: LCSD 570-377400/2-A
Matrix: Solid
Analysis Batch: 377402

Client Sample ID: Lab Control Sample Dup
Prep Type: Total/NA
Prep Batch: 377400

Analyte			Spike Added	LCSD Result	LCSD Qualifier	Unit	D	%Rec	%Rec Limits	RPD	RPD Limit
1,1,1,2-Tetrachloroethane			50.0	48.97		ug/Kg		98	80 - 125	2	20
1,1,1-Trichloroethane			50.0	51.77		ug/Kg		104	78 - 130	3	20
1,1,2,2-Tetrachloroethane			50.0	53.28		ug/Kg		107	80 - 124	3	20
1,1,2-Trichloro-1,2,2-trifluoroethane			50.0	54.75		ug/Kg		110	73 - 130	1	20
1,1,2-Trichloroethane			50.0	50.37		ug/Kg		101	80 - 123	2	20
1,1-Dichloroethane			50.0	52.21		ug/Kg		104	79 - 124	4	20
1,1-Dichloroethene			50.0	53.08		ug/Kg		106	74 - 132	4	20
1,1-Dichloropropene			50.0	52.49		ug/Kg		105	78 - 130	2	20
1,2,3-Trichlorobenzene			50.0	53.43		ug/Kg		107	80 - 123	2	20
1,2,3-Trichloropropane			50.0	50.37		ug/Kg		101	79 - 120	2	20
1,2,4-Trichlorobenzene			50.0	56.56		ug/Kg		113	80 - 125	1	20
1,2,4-Trimethylbenzene			50.0	51.65		ug/Kg		103	80 - 124	1	20
1,2-Dibromo-3-Chloropropane			50.0	46.45		ug/Kg		93	67 - 120	3	20
1,2-Dibromoethane			50.0	48.40		ug/Kg		97	80 - 120	4	20
1,2-Dichlorobenzene			50.0	53.70		ug/Kg		107	80 - 120	2	20
1,2-Dichloroethane			50.0	48.05		ug/Kg		96	77 - 120	5	20
1,2-Dichloropropane			50.0	54.10		ug/Kg		108	80 - 126	8	20
1,3,5-Trimethylbenzene			50.0	51.09		ug/Kg		102	80 - 121	1	20
1,3-Dichlorobenzene			50.0	53.00		ug/Kg		106	80 - 120	3	20
1,3-Dichloropropane			50.0	51.59		ug/Kg		103	80 - 120	0	20
1,4-Dichlorobenzene			50.0	52.32		ug/Kg		105	80 - 120	2	20
2,2-Dichloropropane			50.0	52.89		ug/Kg		106	73 - 135	3	20
2-Butanone (MEK)			50.0	55.40		ug/Kg		111	67 - 136	11	20
2-Chlorotoluene			50.0	52.50		ug/Kg		105	80 - 120	1	20
2-Hexanone			50.0	47.00		ug/Kg		94	70 - 137	0	20
4-Chlorotoluene			50.0	51.40		ug/Kg		103	80 - 121	1	20
4-Methyl-2-pentanone (MIBK)			50.0	48.75		ug/Kg		98	74 - 124	3	20
Acetone			50.0	47.26		ug/Kg		95	61 - 142	5	23
Benzene			50.0	51.66		ug/Kg		103	80 - 120	3	20
Bromobenzene			50.0	51.13		ug/Kg		102	80 - 120	0	20
Bromochloromethane			50.0	53.08		ug/Kg		106	80 - 120	5	20
Bromodichloromethane			50.0	51.39		ug/Kg		103	80 - 125	4	20
Bromoform			50.0	47.39		ug/Kg		95	74 - 138	1	20
Bromomethane			50.0	46.04		ug/Kg		92	58 - 136	11	20
cis-1,2-Dichloroethene			50.0	51.96		ug/Kg		104	80 - 124	1	20
cis-1,3-Dichloropropene			50.0	46.71		ug/Kg		93	80 - 123	4	20
Carbon disulfide			50.0	52.26		ug/Kg		105	68 - 128	1	20
Carbon tetrachloride			50.0	49.73		ug/Kg		99	75 - 140	4	20

Method: 8260B - Volatile Organic Compounds (GC/MS) (Continued)

Lab Sample ID: LCSD 570-377400/2-A
Client Sample ID: Lab Control Sample Dup
Matrix: Solid
Prep Type: Total/NA
Analysis Batch: 377402
Prep Batch: 377400

Analyte			Spike Added	LCSD Result	LCSD Qualifier	Unit	D	%Rec	%Rec Limits	RPD	RPD Limit
Chlorobenzene			50.0	51.61		ug/Kg		103	80 - 120	0	20
Chloroethane			50.0	51.67		ug/Kg		103	76 - 137	10	20
Chloroform			50.0	50.98		ug/Kg		102	80 - 121	3	20
Chloromethane			50.0	51.00		ug/Kg		102	74 - 133	9	20
Dibromochloromethane			50.0	48.61		ug/Kg		97	80 - 132	3	20
Dibromomethane			50.0	50.17		ug/Kg		100	80 - 120	4	20
Dichlorodifluoromethane			50.0	47.23		ug/Kg		94	63 - 146	12	20
Ethylbenzene			50.0	51.77		ug/Kg		104	80 - 120	1	20
Isopropylbenzene			50.0	55.91		ug/Kg		112	80 - 122	0	20
Methylene Chloride			50.0	51.33		ug/Kg		103	74 - 120	5	20
Methyl-t-Butyl Ether (MTBE)			50.0	52.51		ug/Kg		105	79 - 123	5	20
Naphthalene			50.0	51.82		ug/Kg		104	79 - 121	4	20
n-Butylbenzene			50.0	54.35		ug/Kg		109	79 - 131	1	20
N-Propylbenzene			50.0	53.27		ug/Kg		107	80 - 122	0	20
o-Xylene			50.0	51.28		ug/Kg		103	80 - 120	1	20
m,p-Xylene			100	100.4		ug/Kg		100	80 - 120	1	20
p-Isopropyltoluene			50.0	53.60		ug/Kg		107	80 - 126	0	20
sec-Butylbenzene			50.0	54.01		ug/Kg		108	80 - 125	0	20
Styrene			50.0	52.35		ug/Kg		105	80 - 120	1	20
trans-1,2-Dichloroethene			50.0	54.15		ug/Kg		108	75 - 123	5	20
trans-1,3-Dichloropropene			50.0	51.93		ug/Kg		104	80 - 124	0	20
tert-Butylbenzene			50.0	53.16		ug/Kg		106	80 - 124	1	20
Tetrachloroethene			50.0	52.44		ug/Kg		105	80 - 122	0	20
Toluene			50.0	52.26		ug/Kg		105	80 - 120	3	20
Trichloroethene			50.0	51.63		ug/Kg		103	80 - 127	3	20
Trichlorofluoromethane			50.0	50.43		ug/Kg		101	70 - 144	10	20
Vinyl acetate			50.0	51.16		ug/Kg		102	71 - 125	12	20
Vinyl chloride			50.0	49.80		ug/Kg		100	79 - 133	9	20

Surrogate	*LCSD %Recovery*	*LCSD Qualifier*	*Limits*
1,2-Dichloroethane-d4 (Surr)	*99*		*32 - 179*
4-Bromofluorobenzene (Surr)	*98*		*80 - 120*
Dibromofluoromethane (Surr)	*99*		*58 - 147*
Toluene-d8 (Surr)	*100*		*80 - 120*

Lab Sample ID: 570-158209-C-1-B MS
Client Sample ID: Matrix Spike
Matrix: Solid
Prep Type: Total/NA
Analysis Batch: 377402
Prep Batch: 377400

Analyte	Sample Result	Sample Qualifier	Spike Added	MS Result	MS Qualifier	Unit	D	%Rec	%Rec Limits
1,1,1,2-Tetrachloroethane	ND		49.5	46.62		ug/Kg		94	61 - 129
1,1,1-Trichloroethane	ND		49.5	48.74		ug/Kg		98	67 - 125
1,1,2,2-Tetrachloroethane	ND		49.5	52.34		ug/Kg		106	20 - 164
1,1,2-Trichloro-1,2,2-trifluoroethane	ND		49.5	50.80		ug/Kg		103	62 - 125
1,1,2-Trichloroethane	ND		49.5	50.65		ug/Kg		102	52 - 134
1,1-Dichloroethane	ND		49.5	50.07		ug/Kg		101	66 - 125
1,1-Dichloroethene	ND		49.5	49.67		ug/Kg		100	60 - 125
1,1-Dichloropropene	ND		49.5	51.58		ug/Kg		104	69 - 125

Method: 8260B - Volatile Organic Compounds (GC/MS) (Continued)

Lab Sample ID: 570-158209-C-1-B MS
Matrix: Solid
Analysis Batch: 377402

Client Sample ID: Matrix Spike
Prep Type: Total/NA
Prep Batch: 377400

Analyte	Sample Result	Sample Qualifier	Spike Added	MS Result	MS Qualifier	Unit	D	%Rec	%Rec Limits
1,2,3-Trichlorobenzene	ND		49.5	47.81		ug/Kg		97	20 - 145
1,2,3-Trichloropropane	ND		49.5	50.88		ug/Kg		103	53 - 128
1,2,4-Trichlorobenzene	ND		49.5	50.08		ug/Kg		101	20 - 146
1,2,4-Trimethylbenzene	ND		49.5	47.16		ug/Kg		95	51 - 129
1,2-Dibromo-3-Chloropropane	ND		49.5	43.89		ug/Kg		89	33 - 126
1,2-Dibromoethane	ND		49.5	47.51		ug/Kg		96	65 - 125
1,2-Dichlorobenzene	ND		49.5	49.78		ug/Kg		101	47 - 130
1,2-Dichloroethane	ND		49.5	47.31		ug/Kg		96	66 - 127
1,2-Dichloropropane	ND		49.5	50.93		ug/Kg		103	70 - 125
1,3,5-Trimethylbenzene	ND		49.5	47.63		ug/Kg		96	50 - 132
1,3-Dichlorobenzene	ND		49.5	47.60		ug/Kg		96	48 - 128
1,3-Dichloropropane	ND		49.5	51.73		ug/Kg		105	66 - 125
1,4-Dichlorobenzene	ND		49.5	47.71		ug/Kg		96	47 - 127
2,2-Dichloropropane	ND		49.5	49.52		ug/Kg		100	61 - 128
2-Butanone (MEK)	ND		49.5	57.49		ug/Kg		116	48 - 134
2-Chlorotoluene	ND		49.5	49.14		ug/Kg		99	54 - 127
2-Hexanone	ND		49.5	50.44		ug/Kg		102	48 - 136
4-Chlorotoluene	ND		49.5	47.14		ug/Kg		95	54 - 125
4-Methyl-2-pentanone (MIBK)	ND		49.5	50.58		ug/Kg		102	55 - 133
Acetone	ND		49.5	58.31		ug/Kg		118	30 - 175
Benzene	ND		49.5	48.61		ug/Kg		98	70 - 125
Bromobenzene	ND		49.5	48.39		ug/Kg		98	57 - 129
Bromochloromethane	ND		49.5	51.44		ug/Kg		104	67 - 125
Bromodichloromethane	ND		49.5	48.74		ug/Kg		98	64 - 130
Bromoform	ND		49.5	45.65		ug/Kg		92	49 - 133
Bromomethane	ND		49.5	41.68		ug/Kg		84	30 - 149
cis-1,2-Dichloroethene	ND		49.5	50.48		ug/Kg		102	71 - 125
cis-1,3-Dichloropropene	ND		49.5	45.57		ug/Kg		92	63 - 126
Carbon disulfide	ND		49.5	48.38		ug/Kg		98	53 - 125
Carbon tetrachloride	ND		49.5	47.39		ug/Kg		96	60 - 130
Chlorobenzene	ND		49.5	48.63		ug/Kg		98	65 - 125
Chloroethane	ND		49.5	47.22		ug/Kg		95	51 - 131
Chloroform	ND		49.5	48.34		ug/Kg		98	70 - 125
Chloromethane	ND		49.5	45.25		ug/Kg		91	43 - 125
Dibromochloromethane	ND		49.5	47.05		ug/Kg		95	56 - 132
Dibromomethane	ND		49.5	49.83		ug/Kg		101	67 - 127
Dichlorodifluoromethane	ND		49.5	42.96		ug/Kg		87	47 - 127
Ethylbenzene	ND		49.5	48.31		ug/Kg		98	64 - 125
Isopropylbenzene	ND		49.5	52.32		ug/Kg		106	59 - 129
Methylene Chloride	ND		49.5	48.71		ug/Kg		98	60 - 125
Methyl-t-Butyl Ether (MTBE)	ND		49.5	52.61		ug/Kg		106	61 - 125
Naphthalene	ND		49.5	49.69		ug/Kg		100	25 - 136
n-Butylbenzene	ND		49.5	48.66		ug/Kg		98	35 - 135
N-Propylbenzene	ND		49.5	49.61		ug/Kg		100	52 - 131
o-Xylene	ND		49.5	48.39		ug/Kg		98	59 - 128
m,p-Xylene	ND		99.0	94.63		ug/Kg		96	60 - 125
p-Isopropyltoluene	ND		49.5	48.34		ug/Kg		98	46 - 132
sec-Butylbenzene	ND		49.5	48.74		ug/Kg		98	47 - 131
Styrene	ND		49.5	49.75		ug/Kg		100	58 - 128

Method: 8260B - Volatile Organic Compounds (GC/MS) (Continued)

Lab Sample ID: 570-158209-C-1-B MS
Matrix: Solid
Analysis Batch: 377402

Client Sample ID: Matrix Spike
Prep Type: Total/NA
Prep Batch: 377400

Analyte	Sample Result	Sample Qualifier	Spike Added	MS Result	MS Qualifier	Unit	D	%Rec	%Rec Limits
trans-1,2-Dichloroethene	ND		49.5	50.70		ug/Kg		102	67 - 125
trans-1,3-Dichloropropene	ND		49.5	51.21		ug/Kg		103	59 - 132
tert-Butylbenzene	ND		49.5	48.08		ug/Kg		97	53 - 126
Tetrachloroethene	ND		49.5	48.72		ug/Kg		98	62 - 129
Toluene	ND		49.5	48.83		ug/Kg		99	68 - 125
Trichloroethene	ND		49.5	49.59		ug/Kg		100	41 - 169
Trichlorofluoromethane	ND		49.5	47.78		ug/Kg		97	63 - 128
Vinyl acetate	ND		49.5	40.81		ug/Kg		82	20 - 154
Vinyl chloride	ND		49.5	45.59		ug/Kg		92	59 - 125

Surrogate	*MS %Recovery*	*MS Qualifier*	*Limits*
1,2-Dichloroethane-d4 (Surr)	*105*		*32 - 179*
4-Bromofluorobenzene (Surr)	*101*		*80 - 120*
Dibromofluoromethane (Surr)	*103*		*58 - 147*
Toluene-d8 (Surr)	*101*		*80 - 120*

Lab Sample ID: 570-158209-C-1-C MSD
Matrix: Solid
Analysis Batch: 377402

Client Sample ID: Matrix Spike Duplicate
Prep Type: Total/NA
Prep Batch: 377400

Analyte	Sample Result	Sample Qualifier	Spike Added	MSD Result	MSD Qualifier	Unit	D	%Rec	%Rec Limits	RPD	RPD Limit
1,1,1,2-Tetrachloroethane	ND		49.5	47.89		ug/Kg		97	61 - 129	3	23
1,1,1-Trichloroethane	ND		49.5	51.75		ug/Kg		105	67 - 125	6	20
1,1,2,2-Tetrachloroethane	ND		49.5	53.02		ug/Kg		107	20 - 164	1	40
1,1,2-Trichloro-1,2,2-trifluoroethane	ND		49.5	53.21		ug/Kg		107	62 - 125	5	20
1,1,2-Trichloroethane	ND		49.5	52.44		ug/Kg		106	52 - 134	3	25
1,1-Dichloroethane	ND		49.5	52.35		ug/Kg		106	66 - 125	4	20
1,1-Dichloroethene	ND		49.5	52.67		ug/Kg		106	60 - 125	6	20
1,1-Dichloropropene	ND		49.5	53.31		ug/Kg		108	69 - 125	3	20
1,2,3-Trichlorobenzene	ND		49.5	46.22		ug/Kg		93	20 - 145	3	39
1,2,3-Trichloropropane	ND		49.5	51.72		ug/Kg		104	53 - 128	2	25
1,2,4-Trichlorobenzene	ND		49.5	48.70		ug/Kg		98	20 - 146	3	38
1,2,4-Trimethylbenzene	ND		49.5	47.91		ug/Kg		97	51 - 129	2	27
1,2-Dibromo-3-Chloropropane	ND		49.5	47.35		ug/Kg		96	33 - 126	8	29
1,2-Dibromoethane	ND		49.5	48.92		ug/Kg		99	65 - 125	3	21
1,2-Dichlorobenzene	ND		49.5	50.03		ug/Kg		101	47 - 130	1	29
1,2-Dichloroethane	ND		49.5	48.26		ug/Kg		97	66 - 127	2	20
1,2-Dichloropropane	ND		49.5	52.12		ug/Kg		105	70 - 125	2	20
1,3,5-Trimethylbenzene	ND		49.5	48.35		ug/Kg		98	50 - 132	2	29
1,3-Dichlorobenzene	ND		49.5	48.47		ug/Kg		98	48 - 128	2	28
1,3-Dichloropropane	ND		49.5	53.68		ug/Kg		108	66 - 125	4	20
1,4-Dichlorobenzene	ND		49.5	47.91		ug/Kg		97	47 - 127	0	28
2,2-Dichloropropane	ND		49.5	52.16		ug/Kg		105	61 - 128	5	20
2-Butanone (MEK)	ND		49.5	56.74		ug/Kg		115	48 - 134	1	24
2-Chlorotoluene	ND		49.5	49.70		ug/Kg		100	54 - 127	1	27
2-Hexanone	ND		49.5	52.70		ug/Kg		106	48 - 136	4	28
4-Chlorotoluene	ND		49.5	48.57		ug/Kg		98	54 - 125	3	26
4-Methyl-2-pentanone (MIBK)	ND		49.5	51.38		ug/Kg		104	55 - 133	2	23

Method: 8260B - Volatile Organic Compounds (GC/MS) (Continued)

Lab Sample ID: 570-158209-C-1-C MSD
Matrix: Solid
Analysis Batch: 377402

Client Sample ID: Matrix Spike Duplicate
Prep Type: Total/NA
Prep Batch: 377400

Analyte	Sample Result	Sample Qualifier	Spike Added	MSD Result	MSD Qualifier	Unit	D	%Rec	%Rec Limits	RPD	RPD Limit
Acetone	ND		49.5	53.86		ug/Kg		109	30 - 175	8	30
Benzene	ND		49.5	51.08		ug/Kg		103	70 - 125	5	20
Bromobenzene	ND		49.5	48.16		ug/Kg		97	57 - 129	0	26
Bromochloromethane	ND		49.5	52.37		ug/Kg		106	67 - 125	2	20
Bromodichloromethane	ND		49.5	50.67		ug/Kg		102	64 - 130	4	20
Bromoform	ND		49.5	46.89		ug/Kg		95	49 - 133	3	27
Bromomethane	ND		49.5	46.65		ug/Kg		94	30 - 149	11	31
cis-1,2-Dichloroethene	ND		49.5	51.27		ug/Kg		104	71 - 125	2	20
cis-1,3-Dichloropropene	ND		49.5	46.33		ug/Kg		94	63 - 126	2	20
Carbon disulfide	ND		49.5	51.00		ug/Kg		103	53 - 125	5	20
Carbon tetrachloride	ND		49.5	50.47		ug/Kg		102	60 - 130	6	20
Chlorobenzene	ND		49.5	49.92		ug/Kg		101	65 - 125	3	22
Chloroethane	ND		49.5	53.14		ug/Kg		107	51 - 131	12	21
Chloroform	ND		49.5	50.52		ug/Kg		102	70 - 125	4	20
Chloromethane	ND		49.5	51.30		ug/Kg		104	43 - 125	13	21
Dibromochloromethane	ND		49.5	49.36		ug/Kg		100	56 - 132	5	24
Dibromomethane	ND		49.5	50.65		ug/Kg		102	67 - 127	2	20
Dichlorodifluoromethane	ND		49.5	48.73		ug/Kg		98	47 - 127	13	20
Ethylbenzene	ND		49.5	50.09		ug/Kg		101	64 - 125	4	22
Isopropylbenzene	ND		49.5	53.85		ug/Kg		109	59 - 129	3	26
Methylene Chloride	ND		49.5	50.19		ug/Kg		101	60 - 125	3	20
Methyl-t-Butyl Ether (MTBE)	ND		49.5	54.73		ug/Kg		111	61 - 125	4	20
Naphthalene	ND		49.5	49.18		ug/Kg		99	25 - 136	1	32
n-Butylbenzene	ND		49.5	49.09		ug/Kg		99	35 - 135	1	35
N-Propylbenzene	ND		49.5	50.32		ug/Kg		102	52 - 131	1	27
o-Xylene	ND		49.5	49.75		ug/Kg		100	59 - 128	3	24
m,p-Xylene	ND		99.0	96.99		ug/Kg		98	60 - 125	2	24
p-Isopropyltoluene	ND		49.5	49.26		ug/Kg		100	46 - 132	2	30
sec-Butylbenzene	ND		49.5	49.68		ug/Kg		100	47 - 131	2	30
Styrene	ND		49.5	50.25		ug/Kg		102	58 - 128	1	24
trans-1,2-Dichloroethene	ND		49.5	52.81		ug/Kg		107	67 - 125	4	20
trans-1,3-Dichloropropene	ND		49.5	51.23		ug/Kg		103	59 - 132	0	22
tert-Butylbenzene	ND		49.5	49.22		ug/Kg		99	53 - 126	2	28
Tetrachloroethene	ND		49.5	50.71		ug/Kg		102	62 - 129	4	21
Toluene	ND		49.5	50.66		ug/Kg		102	68 - 125	4	20
Trichloroethene	ND		49.5	53.22		ug/Kg		108	41 - 169	7	21
Trichlorofluoromethane	ND		49.5	53.03		ug/Kg		107	63 - 128	10	20
Vinyl acetate	ND		49.5	38.74		ug/Kg		78	20 - 154	5	40
Vinyl chloride	ND		49.5	52.04		ug/Kg		105	59 - 125	13	20

Surrogate	*MSD %Recovery*	*MSD Qualifier*	*Limits*
1,2-Dichloroethane-d4 (Surr)	*104*		*32 - 179*
4-Bromofluorobenzene (Surr)	*99*		*80 - 120*
Dibromofluoromethane (Surr)	*103*		*58 - 147*
Toluene-d8 (Surr)	*100*		*80 - 120*

Method: 8015B - Gasoline Range Organics - (GC)

Lab Sample ID: MB 570-377514/3-A
Client Sample ID: Method Blank
Matrix: Solid
Prep Type: Total/NA
Analysis Batch: 377492
Prep Batch: 377514

Analyte	MB Result	MB Qualifier	RL	MDL	Unit	D	Prepared	Analyzed	Dil Fac
Gasoline Range Organics (C4-C12)	ND		0.098		mg/Kg		10/26/23 11:59	10/26/23 12:56	1

Surrogate	*MB %Recovery*	*MB Qualifier*	*Limits*	*Prepared*	*Analyzed*	*Dil Fac*
4-Bromofluorobenzene (Surr)	*106*		*42 - 126*	*10/26/23 11:59*	*10/26/23 12:56*	*1*

Lab Sample ID: LCS 570-377514/1-A
Client Sample ID: Lab Control Sample
Matrix: Solid
Prep Type: Total/NA
Analysis Batch: 377492
Prep Batch: 377514

Analyte	Spike Added	LCS Result	LCS Qualifier	Unit	D	%Rec	%Rec Limits
Gasoline Range Organics (C4-C13)	1.98	2.293		mg/Kg		116	70 - 124

Surrogate	*LCS %Recovery*	*LCS Qualifier*	*Limits*
4-Bromofluorobenzene (Surr)	*109*		*42 - 126*

Lab Sample ID: LCSD 570-377514/2-A
Client Sample ID: Lab Control Sample Dup
Matrix: Solid
Prep Type: Total/NA
Analysis Batch: 377492
Prep Batch: 377514

Analyte	Spike Added	LCSD Result	LCSD Qualifier	Unit	D	%Rec	%Rec Limits	RPD	RPD Limit
Gasoline Range Organics (C4-C13)	1.97	2.062		mg/Kg		105	70 - 124	11	18

Surrogate	*LCSD %Recovery*	*LCSD Qualifier*	*Limits*
4-Bromofluorobenzene (Surr)	*102*		*42 - 126*

Lab Sample ID: 570-158261-A-2-C MS
Client Sample ID: Matrix Spike
Matrix: Solid
Prep Type: Total/NA
Analysis Batch: 377492
Prep Batch: 377514

Analyte	Sample Result	Sample Qualifier	Spike Added	MS Result	MS Qualifier	Unit	D	%Rec	%Rec Limits
Gasoline Range Organics (C4-C13)	ND		2.01	1.801		mg/Kg		90	48 - 114

Surrogate	*MS %Recovery*	*MS Qualifier*	*Limits*
4-Bromofluorobenzene (Surr)	*110*		*42 - 126*

Lab Sample ID: 570-158261-A-2-D MSD
Client Sample ID: Matrix Spike Duplicate
Matrix: Solid
Prep Type: Total/NA
Analysis Batch: 377492
Prep Batch: 377514

Analyte	Sample Result	Sample Qualifier	Spike Added	MSD Result	MSD Qualifier	Unit	D	%Rec	%Rec Limits	RPD	RPD Limit
Gasoline Range Organics (C4-C13)	ND		1.98	1.645		mg/Kg		83	48 - 114	9	23

Surrogate	*MSD %Recovery*	*MSD Qualifier*	*Limits*
4-Bromofluorobenzene (Surr)	*106*		*42 - 126*

Method: 6010B - Metals (ICP)

Lab Sample ID: MB 570-377372/1-A ^5
Matrix: Solid
Analysis Batch: 377966

Client Sample ID: Method Blank
Prep Type: Total/NA
Prep Batch: 377372

Analyte	MB Result	MB Qualifier	RL	MDL	Unit	D	Prepared	Analyzed	Dil Fac
Antimony	ND		9.80		mg/Kg		10/26/23 06:41	10/27/23 12:40	5
Arsenic	ND		2.94		mg/Kg		10/26/23 06:41	10/27/23 12:40	5
Barium	ND		2.94		mg/Kg		10/26/23 06:41	10/27/23 12:40	5
Beryllium	ND		0.490		mg/Kg		10/26/23 06:41	10/27/23 12:40	5
Cadmium	ND		0.490		mg/Kg		10/26/23 06:41	10/27/23 12:40	5
Chromium	ND		0.980		mg/Kg		10/26/23 06:41	10/27/23 12:40	5
Cobalt	ND		0.980		mg/Kg		10/26/23 06:41	10/27/23 12:40	5
Copper	ND		1.96		mg/Kg		10/26/23 06:41	10/27/23 12:40	5
Lead	ND		1.96		mg/Kg		10/26/23 06:41	10/27/23 12:40	5
Molybdenum	ND		1.96		mg/Kg		10/26/23 06:41	10/27/23 12:40	5
Nickel	ND		1.96		mg/Kg		10/26/23 06:41	10/27/23 12:40	5
Selenium	ND		2.94		mg/Kg		10/26/23 06:41	10/27/23 12:40	5
Silver	ND		1.47		mg/Kg		10/26/23 06:41	10/27/23 12:40	5
Thallium	ND		9.80		mg/Kg		10/26/23 06:41	10/27/23 12:40	5
Vanadium	ND		0.980		mg/Kg		10/26/23 06:41	10/27/23 12:40	5
Zinc	ND		4.90		mg/Kg		10/26/23 06:41	10/27/23 12:40	5

Lab Sample ID: LCS 570-377372/2-A ^5
Matrix: Solid
Analysis Batch: 377966

Client Sample ID: Lab Control Sample
Prep Type: Total/NA
Prep Batch: 377372

Analyte	Spike Added	LCS Result	LCS Qualifier	Unit	D	%Rec	%Rec Limits
Antimony	50.3	50.13		mg/Kg		100	80 - 120
Arsenic	50.3	45.34		mg/Kg		90	80 - 120
Barium	50.3	45.70		mg/Kg		91	80 - 120
Beryllium	50.3	45.82		mg/Kg		91	80 - 120
Cadmium	50.3	45.15		mg/Kg		90	80 - 120
Chromium	50.3	46.04		mg/Kg		92	80 - 120
Cobalt	50.3	45.79		mg/Kg		91	80 - 120
Copper	50.3	44.79		mg/Kg		89	80 - 120
Lead	50.3	45.69		mg/Kg		91	80 - 120
Molybdenum	50.3	46.02		mg/Kg		92	80 - 120
Nickel	50.3	46.11		mg/Kg		92	80 - 120
Selenium	50.3	42.83		mg/Kg		85	80 - 120
Silver	25.1	22.86		mg/Kg		91	80 - 120
Thallium	50.3	45.03		mg/Kg		90	80 - 120
Vanadium	50.3	44.89		mg/Kg		89	80 - 120
Zinc	50.3	45.05		mg/Kg		90	80 - 120

Lab Sample ID: LCSD 570-377372/3-A ^5
Matrix: Solid
Analysis Batch: 377966

Client Sample ID: Lab Control Sample Dup
Prep Type: Total/NA
Prep Batch: 377372

Analyte	Spike Added	LCSD Result	LCSD Qualifier	Unit	D	%Rec	%Rec Limits	RPD	RPD Limit
Antimony	50.0	49.98		mg/Kg		100	80 - 120	0	20
Arsenic	50.0	44.86		mg/Kg		90	80 - 120	1	20
Barium	50.0	45.36		mg/Kg		91	80 - 120	1	20
Beryllium	50.0	45.51		mg/Kg		91	80 - 120	1	20
Cadmium	50.0	44.83		mg/Kg		90	80 - 120	1	20

Method: 6010B - Metals (ICP) (Continued)

Lab Sample ID: LCSD 570-377372/3-A ^5
Matrix: Solid
Analysis Batch: 377966

Client Sample ID: Lab Control Sample Dup
Prep Type: Total/NA
Prep Batch: 377372

Analyte			Spike Added	LCSD Result	LCSD Qualifier	Unit	D	%Rec	%Rec Limits	RPD	RPD Limit
Chromium			50.0	45.65		mg/Kg		91	80 - 120	1	20
Cobalt			50.0	45.03		mg/Kg		90	80 - 120	2	20
Copper			50.0	44.50		mg/Kg		89	80 - 120	1	20
Lead			50.0	45.49		mg/Kg		91	80 - 120	0	20
Molybdenum			50.0	45.85		mg/Kg		92	80 - 120	0	20
Nickel			50.0	46.09		mg/Kg		92	80 - 120	0	20
Selenium			50.0	42.79		mg/Kg		86	80 - 120	0	20
Silver			25.0	22.63		mg/Kg		91	80 - 120	1	20
Thallium			50.0	44.81		mg/Kg		90	80 - 120	0	20
Vanadium			50.0	44.73		mg/Kg		89	80 - 120	0	20
Zinc			50.0	44.90		mg/Kg		90	80 - 120	0	20

Lab Sample ID: 570-158059-R-12-A MS ^5
Matrix: Solid
Analysis Batch: 377966

Client Sample ID: Matrix Spike
Prep Type: Total/NA
Prep Batch: 377372

Analyte	Sample Result	Sample Qualifier	Spike Added	MS Result	MS Qualifier	Unit	D	%Rec	%Rec Limits
Antimony	ND	F1	48.8	12.48	F1	mg/Kg		26	75 - 125
Arsenic	6.58		48.8	47.59		mg/Kg		84	75 - 125
Barium	101	F1	48.8	142.3		mg/Kg		85	75 - 125
Beryllium	0.895		48.8	45.72		mg/Kg		92	75 - 125
Cadmium	ND		48.8	42.24		mg/Kg		87	75 - 125
Chromium	29.9	F1	48.8	69.29		mg/Kg		81	75 - 125
Cobalt	10.8		48.8	51.07		mg/Kg		83	75 - 125
Copper	21.3		48.8	63.98		mg/Kg		87	75 - 125
Lead	9.72		48.8	50.40		mg/Kg		83	75 - 125
Molybdenum	ND		48.8	41.93		mg/Kg		84	75 - 125
Nickel	23.0	F1	48.8	61.39		mg/Kg		79	75 - 125
Selenium	ND		48.8	40.67		mg/Kg		83	75 - 125
Silver	ND		24.4	22.30		mg/Kg		91	75 - 125
Thallium	ND		48.8	41.65		mg/Kg		85	75 - 125
Vanadium	53.9	F1	48.8	90.67		mg/Kg		75	75 - 125
Zinc	62.8	F1	48.8	94.41	F1	mg/Kg		65	75 - 125

Lab Sample ID: 570-158059-S-12-A MSD ^5
Matrix: Solid
Analysis Batch: 377966

Client Sample ID: Matrix Spike Duplicate
Prep Type: Total/NA
Prep Batch: 377372

Analyte	Sample Result	Sample Qualifier	Spike Added	MSD Result	MSD Qualifier	Unit	D	%Rec	%Rec Limits	RPD	RPD Limit
Antimony	ND	F1	49.0	14.71	F1	mg/Kg		30	75 - 125	16	20
Arsenic	6.58		49.0	47.98		mg/Kg		84	75 - 125	1	20
Barium	101	F1	49.0	123.9	F1	mg/Kg		47	75 - 125	14	20
Beryllium	0.895		49.0	47.17		mg/Kg		94	75 - 125	3	20
Cadmium	ND		49.0	43.82		mg/Kg		89	75 - 125	4	20
Chromium	29.9	F1	49.0	65.83	F1	mg/Kg		73	75 - 125	5	20
Cobalt	10.8		49.0	51.48		mg/Kg		83	75 - 125	1	20
Copper	21.3		49.0	61.19		mg/Kg		81	75 - 125	4	20
Lead	9.72		49.0	50.25		mg/Kg		83	75 - 125	0	20
Molybdenum	ND		49.0	44.42		mg/Kg		89	75 - 125	6	20

Method: 6010B - Metals (ICP) (Continued)

Lab Sample ID: 570-158059-S-12-A MSD ^5
Matrix: Solid
Analysis Batch: 377966

Client Sample ID: Matrix Spike Duplicate
Prep Type: Total/NA
Prep Batch: 377372

Analyte	Sample Result	Sample Qualifier	Spike Added	MSD Result	MSD Qualifier	Unit	D	%Rec	%Rec Limits	RPD	RPD Limit
Nickel	23.0	F1	49.0	58.74	F1	mg/Kg		73	75 - 125	4	20
Selenium	ND		49.0	42.25		mg/Kg		86	75 - 125	4	20
Silver	ND		24.5	22.87		mg/Kg		93	75 - 125	2	20
Thallium	ND		49.0	43.52		mg/Kg		89	75 - 125	4	20
Vanadium	53.9	F1	49.0	82.89	F1	mg/Kg		59	75 - 125	9	20
Zinc	62.8	F1	49.0	85.55	F1	mg/Kg		46	75 - 125	10	20

Method: 7471A - Mercury (CVAA)

Lab Sample ID: MB 570-377307/1-A
Matrix: Solid
Analysis Batch: 377732

Client Sample ID: Method Blank
Prep Type: Total/NA
Prep Batch: 377307

Analyte	MB Result	MB Qualifier	RL	MDL	Unit	D	Prepared	Analyzed	Dil Fac
Mercury	ND		0.0833		mg/Kg		10/25/23 19:42	10/26/23 21:26	1

Lab Sample ID: LCS 570-377307/2-A
Matrix: Solid
Analysis Batch: 377732

Client Sample ID: Lab Control Sample
Prep Type: Total/NA
Prep Batch: 377307

Analyte	Spike Added	LCS Result	LCS Qualifier	Unit	D	%Rec	%Rec Limits
Mercury	0.392	0.4108		mg/Kg		105	80 - 120

Lab Sample ID: LCSD 570-377307/3-A
Matrix: Solid
Analysis Batch: 377732

Client Sample ID: Lab Control Sample Dup
Prep Type: Total/NA
Prep Batch: 377307

Analyte	Spike Added	LCSD Result	LCSD Qualifier	Unit	D	%Rec	%Rec Limits	RPD	RPD Limit
Mercury	0.385	0.4069		mg/Kg		106	80 - 120	1	10

Lab Sample ID: 570-157800-A-1-H MS
Matrix: Solid
Analysis Batch: 377732

Client Sample ID: Matrix Spike
Prep Type: Total/NA
Prep Batch: 377307

Analyte	Sample Result	Sample Qualifier	Spike Added	MS Result	MS Qualifier	Unit	D	%Rec	%Rec Limits
Mercury	ND	F1	0.400	0.4326		mg/Kg		108	80 - 120

Lab Sample ID: 570-157800-A-1-I MSD
Matrix: Solid
Analysis Batch: 377732

Client Sample ID: Matrix Spike Duplicate
Prep Type: Total/NA
Prep Batch: 377307

Analyte	Sample Result	Sample Qualifier	Spike Added	MSD Result	MSD Qualifier	Unit	D	%Rec	%Rec Limits	RPD	RPD Limit
Mercury	ND	F1	0.408	ND	F1	mg/Kg		0	80 - 120	NC	20

QC Association Summary

Client: Ninyo & Moore
Project/Site: Gardena Aquatic Center / 212427001

Job ID: 570-158168-1

GC/MS VOA

Prep Batch: 377400

Lab Sample ID	Client Sample ID	Prep Type	Matrix	Method	Prep Batch
570-158168-2	B1-3	Total/NA	Solid	5030C	
570-158168-6	B2-5	Total/NA	Solid	5030C	
MB 570-377400/5-A	Method Blank	Total/NA	Solid	5030C	
LCS 570-377400/1-A	Lab Control Sample	Total/NA	Solid	5030C	
LCSD 570-377400/2-A	Lab Control Sample Dup	Total/NA	Solid	5030C	
570-158209-C-1-B MS	Matrix Spike	Total/NA	Solid	5030C	
570-158209-C-1-C MSD	Matrix Spike Duplicate	Total/NA	Solid	5030C	

Analysis Batch: 377402

Lab Sample ID	Client Sample ID	Prep Type	Matrix	Method	Prep Batch
570-158168-2	B1-3	Total/NA	Solid	8260B	377400
570-158168-6	B2-5	Total/NA	Solid	8260B	377400
MB 570-377400/5-A	Method Blank	Total/NA	Solid	8260B	377400
LCS 570-377400/1-A	Lab Control Sample	Total/NA	Solid	8260B	377400
LCSD 570-377400/2-A	Lab Control Sample Dup	Total/NA	Solid	8260B	377400
570-158209-C-1-B MS	Matrix Spike	Total/NA	Solid	8260B	377400
570-158209-C-1-C MSD	Matrix Spike Duplicate	Total/NA	Solid	8260B	377400

GC VOA

Analysis Batch: 377492

Lab Sample ID	Client Sample ID	Prep Type	Matrix	Method	Prep Batch
570-158168-2	B1-3	Total/NA	Solid	8015B	377514
570-158168-6	B2-5	Total/NA	Solid	8015B	377514
MB 570-377514/3-A	Method Blank	Total/NA	Solid	8015B	377514
LCS 570-377514/1-A	Lab Control Sample	Total/NA	Solid	8015B	377514
LCSD 570-377514/2-A	Lab Control Sample Dup	Total/NA	Solid	8015B	377514
570-158261-A-2-C MS	Matrix Spike	Total/NA	Solid	8015B	377514
570-158261-A-2-D MSD	Matrix Spike Duplicate	Total/NA	Solid	8015B	377514

Prep Batch: 377514

Lab Sample ID	Client Sample ID	Prep Type	Matrix	Method	Prep Batch
570-158168-2	B1-3	Total/NA	Solid	5030C	
570-158168-6	B2-5	Total/NA	Solid	5030C	
MB 570-377514/3-A	Method Blank	Total/NA	Solid	5030C	
LCS 570-377514/1-A	Lab Control Sample	Total/NA	Solid	5030C	
LCSD 570-377514/2-A	Lab Control Sample Dup	Total/NA	Solid	5030C	
570-158261-A-2-C MS	Matrix Spike	Total/NA	Solid	5030C	
570-158261-A-2-D MSD	Matrix Spike Duplicate	Total/NA	Solid	5030C	

GC Semi VOA

Prep Batch: 377094

Lab Sample ID	Client Sample ID	Prep Type	Matrix	Method	Prep Batch
570-158168-7	COMP-1	Total/NA	Solid	3550C	
570-158168-8	COMP-2	Total/NA	Solid	3550C	

Analysis Batch: 377336

Lab Sample ID	Client Sample ID	Prep Type	Matrix	Method	Prep Batch
570-158168-7	COMP-1	Total/NA	Solid	8015B	377094
570-158168-8	COMP-2	Total/NA	Solid	8015B	377094

Metals

Prep Batch: 377307

Lab Sample ID	Client Sample ID	Prep Type	Matrix	Method	Prep Batch
570-158168-7	COMP-1	Total/NA	Solid	7471A	
570-158168-8	COMP-2	Total/NA	Solid	7471A	
MB 570-377307/1-A	Method Blank	Total/NA	Solid	7471A	
LCS 570-377307/2-A	Lab Control Sample	Total/NA	Solid	7471A	
LCSD 570-377307/3-A	Lab Control Sample Dup	Total/NA	Solid	7471A	
570-157800-A-1-H MS	Matrix Spike	Total/NA	Solid	7471A	
570-157800-A-1-I MSD	Matrix Spike Duplicate	Total/NA	Solid	7471A	

Prep Batch: 377372

Lab Sample ID	Client Sample ID	Prep Type	Matrix	Method	Prep Batch
570-158168-7	COMP-1	Total/NA	Solid	3050B	
570-158168-8	COMP-2	Total/NA	Solid	3050B	
MB 570-377372/1-A ^5	Method Blank	Total/NA	Solid	3050B	
LCS 570-377372/2-A ^5	Lab Control Sample	Total/NA	Solid	3050B	
LCSD 570-377372/3-A ^5	Lab Control Sample Dup	Total/NA	Solid	3050B	
570-158059-R-12-A MS ^5	Matrix Spike	Total/NA	Solid	3050B	
570-158059-S-12-A MSD ^5	Matrix Spike Duplicate	Total/NA	Solid	3050B	

Analysis Batch: 377732

Lab Sample ID	Client Sample ID	Prep Type	Matrix	Method	Prep Batch
570-158168-7	COMP-1	Total/NA	Solid	7471A	377307
570-158168-8	COMP-2	Total/NA	Solid	7471A	377307
MB 570-377307/1-A	Method Blank	Total/NA	Solid	7471A	377307
LCS 570-377307/2-A	Lab Control Sample	Total/NA	Solid	7471A	377307
LCSD 570-377307/3-A	Lab Control Sample Dup	Total/NA	Solid	7471A	377307
570-157800-A-1-H MS	Matrix Spike	Total/NA	Solid	7471A	377307
570-157800-A-1-I MSD	Matrix Spike Duplicate	Total/NA	Solid	7471A	377307

Analysis Batch: 377966

Lab Sample ID	Client Sample ID	Prep Type	Matrix	Method	Prep Batch
570-158168-7	COMP-1	Total/NA	Solid	6010B	377372
570-158168-8	COMP-2	Total/NA	Solid	6010B	377372
MB 570-377372/1-A ^5	Method Blank	Total/NA	Solid	6010B	377372
LCS 570-377372/2-A ^5	Lab Control Sample	Total/NA	Solid	6010B	377372
LCSD 570-377372/3-A ^5	Lab Control Sample Dup	Total/NA	Solid	6010B	377372
570-158059-R-12-A MS ^5	Matrix Spike	Total/NA	Solid	6010B	377372
570-158059-S-12-A MSD ^5	Matrix Spike Duplicate	Total/NA	Solid	6010B	377372

Organic Prep

Analysis Batch: 377465

Lab Sample ID	Client Sample ID	Prep Type	Matrix	Method	Prep Batch
570-158168-1	B1-1	Total/NA	Solid	Composite	
570-158168-2	B1-3	Total/NA	Solid	Composite	
570-158168-3	B1-5	Total/NA	Solid	Composite	
570-158168-4	B2-1	Total/NA	Solid	Composite	
570-158168-5	B2-3	Total/NA	Solid	Composite	
570-158168-6	B2-5	Total/NA	Solid	Composite	

Lab Chronicle

Client: Ninyo & Moore
Project/Site: Gardena Aquatic Center / 212427001

Job ID: 570-158168-1

Client Sample ID: B1-1
Date Collected: 10/25/23 12:57
Date Received: 10/25/23 15:45

Lab Sample ID: 570-158168-1
Matrix: Solid

Prep Type	Batch Type	Batch Method	Run	Dil Factor	Initial Amount	Final Amount	Batch Number	Prepared or Analyzed	Analyst	Lab
Total/NA	Analysis	Composite		1			377465	10/26/23 09:54	UQTR	EET CAL 4
	Instrument ID: NOEQUIP									

Client Sample ID: B1-3
Date Collected: 10/25/23 13:02
Date Received: 10/25/23 15:45

Lab Sample ID: 570-158168-2
Matrix: Solid

Prep Type	Batch Type	Batch Method	Run	Dil Factor	Initial Amount	Final Amount	Batch Number	Prepared or Analyzed	Analyst	Lab
Total/NA	Prep	5030C			5.09 g	5 mL	377400	10/26/23 07:54	AH8S	EET CAL 4
Total/NA	Analysis	8260B		1	5 g	5 mL	377402	10/26/23 13:50	AH8S	EET CAL 4
	Instrument ID: GCMSCC									
Total/NA	Prep	5030C			5.07 g	5 mL	377514	10/26/23 11:59	A9VE	EET CAL 4
Total/NA	Analysis	8015B		1	5 g	5 mL	377492	10/26/23 13:35	PT	EET CAL 4
	Instrument ID: GC73									
Total/NA	Analysis	Composite		1			377465	10/26/23 09:54	UQTR	EET CAL 4
	Instrument ID: NOEQUIP									

Client Sample ID: B1-5
Date Collected: 10/25/23 13:09
Date Received: 10/25/23 15:45

Lab Sample ID: 570-158168-3
Matrix: Solid

Prep Type	Batch Type	Batch Method	Run	Dil Factor	Initial Amount	Final Amount	Batch Number	Prepared or Analyzed	Analyst	Lab
Total/NA	Analysis	Composite		1			377465	10/26/23 09:54	UQTR	EET CAL 4
	Instrument ID: NOEQUIP									

Client Sample ID: B2-1
Date Collected: 10/25/23 13:21
Date Received: 10/25/23 15:45

Lab Sample ID: 570-158168-4
Matrix: Solid

Prep Type	Batch Type	Batch Method	Run	Dil Factor	Initial Amount	Final Amount	Batch Number	Prepared or Analyzed	Analyst	Lab
Total/NA	Analysis	Composite		1			377465	10/26/23 09:54	UQTR	EET CAL 4
	Instrument ID: NOEQUIP									

Client Sample ID: B2-3
Date Collected: 10/25/23 13:27
Date Received: 10/25/23 15:45

Lab Sample ID: 570-158168-5
Matrix: Solid

Prep Type	Batch Type	Batch Method	Run	Dil Factor	Initial Amount	Final Amount	Batch Number	Prepared or Analyzed	Analyst	Lab
Total/NA	Analysis	Composite		1			377465	10/26/23 09:54	UQTR	EET CAL 4
	Instrument ID: NOEQUIP									

Lab Chronicle

Client: Ninyo & Moore
Job ID: 570-158168-1
Project/Site: Gardena Aquatic Center / 212427001

Client Sample ID: B2-5
Lab Sample ID: 570-158168-6
Date Collected: 10/25/23 13:39
Matrix: Solid
Date Received: 10/25/23 15:45

Prep Type	Batch Type	Batch Method	Run	Dil Factor	Initial Amount	Final Amount	Batch Number	Prepared or Analyzed	Analyst	Lab
Total/NA	Prep	5030C			5.02 g	5 mL	377400	10/26/23 07:54	AH8S	EET CAL 4
Total/NA	Analysis	8260B		1	5 g	5 mL	377402	10/26/23 14:11	AH8S	EET CAL 4
	Instrument ID: GCMSCC									
Total/NA	Prep	5030C			5.15 g	5 mL	377514	10/26/23 11:59	A9VE	EET CAL 4
Total/NA	Analysis	8015B		1	5 g	5 mL	377492	10/26/23 13:55	PT	EET CAL 4
	Instrument ID: GC73									
Total/NA	Analysis	Composite		1			377465	10/26/23 09:54	UQTR	EET CAL 4
	Instrument ID: NOEQUIP									

Client Sample ID: COMP-1
Lab Sample ID: 570-158168-7
Date Collected: 10/25/23 00:00
Matrix: Solid
Date Received: 10/25/23 15:45

Prep Type	Batch Type	Batch Method	Run	Dil Factor	Initial Amount	Final Amount	Batch Number	Prepared or Analyzed	Analyst	Lab
Total/NA	Prep	3550C			10.25 g	10 mL	377094	10/25/23 21:00	KH3Z	EET CAL 4
Total/NA	Analysis	8015B		1	10 mL	10 mL	377336	10/27/23 01:13	N5Y3	EET CAL 4
	Instrument ID: GC47									
Total/NA	Prep	3050B			2.00 g	50 mL	377372	10/26/23 09:00	GYR8	EET CAL 4
Total/NA	Analysis	6010B		5			377966	10/27/23 13:02	VZ0K	EET CAL 4
	Instrument ID: ICP10									
Total/NA	Prep	7471A			0.53 g	50 mL	377307	10/25/23 19:42	EV3M	EET CAL 4
Total/NA	Analysis	7471A		1			377732	10/26/23 21:38	CS5Z	EET CAL 4
	Instrument ID: HG7									

Client Sample ID: COMP-2
Lab Sample ID: 570-158168-8
Date Collected: 10/25/23 00:00
Matrix: Solid
Date Received: 10/25/23 15:45

Prep Type	Batch Type	Batch Method	Run	Dil Factor	Initial Amount	Final Amount	Batch Number	Prepared or Analyzed	Analyst	Lab
Total/NA	Prep	3550C			10.06 g	10 mL	377094	10/25/23 21:00	KH3Z	EET CAL 4
Total/NA	Analysis	8015B		1	10 mL	10 mL	377336	10/27/23 01:34	N5Y3	EET CAL 4
	Instrument ID: GC47									
Total/NA	Prep	3050B			2.01 g	50 mL	377372	10/26/23 10:00	GYR8	EET CAL 4
Total/NA	Analysis	6010B		5			377966	10/27/23 13:38	VZ0K	EET CAL 4
	Instrument ID: ICP10									
Total/NA	Prep	7471A			0.52 g	50 mL	377307	10/25/23 19:42	EV3M	EET CAL 4
Total/NA	Analysis	7471A		1			377732	10/26/23 21:40	CS5Z	EET CAL 4
	Instrument ID: HG7									

Laboratory References:
EET CAL 4 = Eurofins Calscience Tustin, 2841 Dow Avenue, Tustin, CA 92780, TEL (714)895-5494

Accreditation/Certification Summary

Client: Ninyo & Moore
Job ID: 570-158168-1
Project/Site: Gardena Aquatic Center / 212427001

Laboratory: Eurofins Calscience

The accreditations/certifications listed below are applicable to this report.

Authority	Program	Identification Number	Expiration Date
California	State	3082	07-31-24
Oregon	NELAP	4175	02-02-24

Method Summary

Client: Ninyo & Moore
Project/Site: Gardena Aquatic Center / 212427001

Job ID: 570-158168-1

Method	Method Description	Protocol	Laboratory
8260B	Volatile Organic Compounds (GC/MS)	SW846	EET CAL 4
8015B	Gasoline Range Organics - (GC)	SW846	EET CAL 4
8015B	Diesel Range Organics (DRO) (GC)	SW846	EET CAL 4
6010B	Metals (ICP)	SW846	EET CAL 4
7471A	Mercury (CVAA)	SW846	EET CAL 4
Composite	Sample Compositing	None	EET CAL 4
3050B	Preparation, Metals	SW846	EET CAL 4
3550C	Ultrasonic Extraction	SW846	EET CAL 4
5030C	Purge and Trap	SW846	EET CAL 4
7471A	Preparation, Mercury	SW846	EET CAL 4

Protocol References:

None = None

SW846 = "Test Methods For Evaluating Solid Waste, Physical/Chemical Methods", Third Edition, November 1986 And Its Updates.

Laboratory References:

EET CAL 4 = Eurofins Calscience Tustin, 2841 Dow Avenue, Tustin, CA 92780, TEL (714)895-5494

Sample Summary

Client: Ninyo & Moore
Job ID: 570-158168-1
Project/Site: Gardena Aquatic Center / 212427001

Lab Sample ID	Client Sample ID	Matrix	Collected	Received
570-158168-1	B1-1	Solid	10/25/23 12:57	10/25/23 15:45
570-158168-2	B1-3	Solid	10/25/23 13:02	10/25/23 15:45
570-158168-3	B1-5	Solid	10/25/23 13:09	10/25/23 15:45
570-158168-4	B2-1	Solid	10/25/23 13:21	10/25/23 15:45
570-158168-5	B2-3	Solid	10/25/23 13:27	10/25/23 15:45
570-158168-6	B2-5	Solid	10/25/23 13:39	10/25/23 15:45
570-158168-7	COMP-1	Solid	10/25/23 00:00	10/25/23 15:45
570-158168-8	COMP-2	Solid	10/25/23 00:00	10/25/23 15:45

158168
ZXS9

eurofins | Environment Testing Calscience

2841 Dow Avenue, Suite 100, Tustin, CA 92780 • (714) 895-5494
For courier service / sample drop off information, contact us26_sales@eurofinsus.com or call us.

D4DocID Rev. D4DocVersionFull

CHAIN-OF-CUSTODY RECORD

DATE: 10/25/23
PAGE: 1 OF 1

LABORATORY CLIENT: Ninyo and Moore	CLIENT PROJECT NAME / NO.: 212427001
ADDRESS: 475 Goddard #200	P.O. NO.:
CITY: Irvine STATE: CA ZIP: 92618	PROJECT CONTACT:
TEL: 949-753-7070 E-MAIL: pbrimmage@ninyoandmoore.com	LAB CONTACT OR QUOTE NO.:
	GLOBAL ID: LOG CODE: SAMPLER(S): (PRINT) Matthew Schweiger

TURNAROUND TIME (Rush surcharges may apply to any TAT not "STANDARD"):
☐ SAME DAY ☐ 24 HR ☑ 48 HR ☐ 72 HR ☐ 5 DAYS ☐ STANDARD

EDD:
☐ COELT EDF ☐ OTHER

SPECIAL INSTRUCTIONS:
16004 S. Harvard Ave
Gardena, CA 90247

comp-1 (B1-1, B1-3, B1-5)

comp-2 (B2-1, B2-3, B2-5)

REQUESTED ANALYSES
Please check box or fill in blank as needed.

LAB USE ONLY	SAMPLE ID	SAMPLING DATE	SAMPLING TIME	MATRIX	NO. OF CONT.	Unpreserved	Preserved ON ICE	Field Filtered	☐ TPH(g) ☐ GRO	☐ TPH(d) ☐ DRO	TPH ☐ C6-C36 ☐ C6-C44	TPH	BTEX / MTBE ☐ 8260 ☐	VOCs (8260)	Oxygenates (8260)	Prep (5035) ☐ En Core ☐ Terra Core	SVOCs (8270)	Pesticides (8081)	PCBs (8082)	PAHs ☐ 8270 ☐ 8270 SIM	T22 Metals ☐ 6010/747X ☐ 6020/747X	Cr(VI) ☐ 7196 ☐ 7199 ☐ 218.6				
1	B1-1	10/25	1257	soil	1 sleeve		X																			comp-1
2	B1-3		1302				X		X					X												comp-1
3	B1-5		1309				X																			comp-1
4	B2-1		1321				X																			comp-2
5	B2-3		1327				X																			comp-2
6	B2-5		1339				X		X					X												comp-2
7	comp-1		—		—		X				X										X					
8	comp-2		—		—		X				X										X					

Relinquished by: (Signature)	Date: 10/25	Time: 1545	Received by: (Signature/Affiliation)
Relinquished by: (Signature)	Date:	Time:	Received by: (Signature/Affiliation)
Relinquished by: (Signature)	Date:	Time:	Received by: (Signature/Affiliation)

Date: 10/25/23 Time: 15:45
Date: Time:

1.5/1.4 Sdz

570-158168 Chain of Custody

Login Sample Receipt Checklist

Client: Ninyo & Moore

Job Number: 570-158168-1

Login Number: 158168
List Number: 1
Creator: Patel, Jayesh

List Source: Eurofins Calscience

Question	Answer	Comment
Radioactivity wasn't checked or is </= background as measured by a survey meter.	N/A	
The cooler's custody seal, if present, is intact.	True	
Sample custody seals, if present, are intact.	True	
The cooler or samples do not appear to have been compromised or tampered with.	True	
Samples were received on ice.	True	
Cooler Temperature is acceptable.	True	
Cooler Temperature is recorded.	True	
COC is present.	True	
COC is filled out in ink and legible.	True	
COC is filled out with all pertinent information.	True	
Is the Field Sampler's name present on COC?	True	
There are no discrepancies between the containers received and the COC.	True	
Samples are received within Holding Time (excluding tests with immediate HTs)	True	
Sample containers have legible labels.	True	
Containers are not broken or leaking.	True	
Sample collection date/times are provided.	True	
Appropriate sample containers are used.	True	
Sample bottles are completely filled.	True	
Sample Preservation Verified.	True	
There is sufficient vol. for all requested analyses, incl. any requested MS/MSDs	True	
Containers requiring zero headspace have no headspace or bubble is <6mm (1/4").	True	
Multiphasic samples are not present.	True	
Samples do not require splitting or compositing.	True	
Residual Chlorine Checked.	N/A	

New Dynasty Construction Co.
3002 Dow Ave., Ste. 204
Tustin CA 92780
License # 971321
DIR #1000004807

SEALED BID

City of Gardena
City Clerk, City Hall,
1700 W. 162nd Street
Gardena, California

Proj. No.: ***978***
Due: ***Tuesday, November 21, 2023***
Hour: ***10:00 A.M.***
Project Desc: ***GARDENA COMMUNITY AQUATIC AND SENIOR CENTER***

F&A Federal Credit Union
2625 Corporate Place, Monterey Park, CA 91754-7645 • P.O. Box 30831, Los Angeles, CA 90030-0831
800-222-1226 • www.fafcu.org

'23 NOV 21 AM 9:57
CITY CLERK'S OFC

1

BID PROPOSAL (BP)

GARDENA COMMUNITY AQUATIC AND SENIOR CENTER

PROJECT NO. JN 978

Contractor:	New Dynasty Construction Co.
Address:	3002 Dow Avenue, Suite 204 Tustin, CA 92780
Phone:	949-502-6400
Fax:	949-502-6404
License No.:	971321
D.I.R. No.	1000004807
Email:	mtraver@new-dc.com

To Be Submitted

WITH

Bid Package

BID PROPOSAL

PROJECT NO. JN 978

BID SCHEDULE

The undersigned, having examined the proposed Contract Documents titled:

GARDENA COMMUNITY AQUATIC AND SENIOR CENTER

and having visited the site and examined the conditions affecting the work, hereby proposes and agrees to furnish all labor, materials, equipment, and appliances, and to perform operations necessary to complete the work as required by said proposed Contract Documents and itemized bid schedule below. All work shall be completed within **two hundred sixty (260) Working Days** from the date the Notice of Proceed is issued by the Engineer. The maintenance period, City Holidays, and unforeseen weather conditions or other "Acts of God" are not counted towards working days. The City will also consider waiving delayed workings days, potentially caused by long lead items, contingent on the submission of supporting documents.

Item No.	Item Description	Unit	Approx. Quantity	Unit Price in Figures	Item Total
1	**Mobilization (Maximum 2%)**	L.S.	1	$ 337,413.00	$ 337,413.00
2	**General Conditions (Maximum 2%)**	L.S.	1	$ 337,413.00	$ 337,413.00
3	**Site Improvements:** complete and in place, per the plans and specs, including deferred submittals	L.S.	1	$1,663,906.00	$1,663,906.00
4	**Aquatics Building & Pool Equipment /Trash Enclosure Building:** in place and complete per the plans and specs, including deferred submittals	L.S.	1	$ 9,586,437.00	$9,586,437.00
5	**Pool and Pool Equipment**: in place and complete per the plans and specs, including deferred submittals	L.S.	1	$3,854,801.00	$3,854,801.00
6	**Utilities:** (Electrical, Phone & Fiber/Data Services; Sewer, Domestic Water, Fire Service Water, and Gas Services, per the plans and specs, including any deferred submittals	L.S.	1	$ 870,882.00	$870,882.00
7	**Photovoltaic System:** in place and complete, per the plans and specs, including any deferred submittals	L.S.	1	$ 119,184.00	$ 119,184.00
8	**Telecommunication/AV, Security**: in place and complete per the plans and specs, including deferred submittals	L.S.	1	$ 87,636.00	$ 87,636.00
9	**90-Day Landscape Maintenance Period**	L.S.	1	$ 12,982.00	$ 12,982.00

TOTAL CONTRACT BID:

(Figures) $ 16,870,644.00

(Words) Sixteen million eight hundred seventy thousand six hundred forty four dollars and zero cents

*** In case of error in extension of price into the total price column, the unit price will govern.**

PAYEMNT: All work required and shown on the construction plans and this specification for which no price or item is listed on this proposal, it shall be understood that such work, equipment, labor, tools and materials shall be provided without extra charge, allowance or direct payment of any kind. Payment for performing such work or furnishing such equipment, labor, tools and materials shall be included in the above lump sum or unit bid prices and no additional compensation will be paid, therefore. The Contractor is required to submit a detailed schedule of values within twenty-one (21) calendar days after award of contract.

If the City determines that any of the unit bid prices are significantly unbalanced to the potential detriment of the City, the bid will be replaced as non-responsive.

In case of any discrepancy between the words and the figures, the words shall prevail. If the unit price and the total amount for any item are not in agreement, the unit price alone shall be considered to represent the bidder's intention and all totals will be corrected to conform thereto.

Attached hereto is cash, a certified check, a cashier's check, or a bidder's bond in the amount of see attached bid bond: 10% of the total amount bid Dollars, said amount being not less than 10 percent of the amount bid. Pursuant to Public Contract Code Sections 20172 and 20174, it is agreed a portion equal to the difference between the low bid and second low bid shall be retained as a bid bond forfeiture by the City if the undersigned fails or refuses to execute the Contract and furnish the required bonds and certificates of insurance within the time provided.

New Dynasty Construction Co.
Name of Bidder

Sherwin Chegini - President
Signature of Bidder

BID PROPSOAL

PROJECT NO. JN 978

ACKNOWLEDGEMENT OF ADDENDA RECEIVED

The Bidder shall acknowledge the receipt of addenda by number and date each addendum received.

Addendum No. 1 Date 11/8/23 Addendum No. ____ Date _____

Addendum No. ____ Date _____ Addendum No. ____ Date _____

Addendum No. ____ Date _____ Addendum No. ____ Date _____

Addenda will be issued by email directly to the pre-qualified general contractors. It is the Bidder's sole responsibility to obtain and administer any Addendum related to this bid. **An Addendum must be acknowledged above by a bidder in its submitted form of Proposal.**

If an addendum or addenda has been issued by the City and not noted above as being received by the Bidder, the Bid Proposal may be rejected.

Sherwin Chegini - President
Bidder's Signature

11/21/2023
Date

BID PROPOSAL

PROJECT NO. JN 978

BIDDER'S DECLARATION

It is understood and agreed that:

1. The undersigned has carefully examined all documents which will form a part of the Contract; namely, the Notice Inviting Bids, the Instructions to Bidders, this Proposal, the Bid Bond, the Contract, the Faithful Performance Bond, the Payment Bond, the federal requirements, if any, the Plans and Specifications, the Special Provisions, and the Technical Provisions.

2. The undersigned has, by investigation at the site of the work and otherwise, satisfied himself as to the nature and location of the work and fully informed himself as to all conditions and matters, which can in any way affect the work or the cost thereof.

3. The undersigned fully understands the scope of work and has checked carefully all words and figures inserted in this Proposal and he further understands that the City will not be responsible for any errors or omissions in the preparation of the Proposal.

4. The undersigned agrees and acknowledges that he is aware of the provisions of Section 3700 of the Labor Code which requires every employer to be insured against liability for workers' compensation or to undertake self-insurance in accordance with the provisions of that Code, and that the undersigned will comply with such provisions before commencing the performance of the Contract if it is awarded to the undersigned.

The undersigned will execute the Contract and furnish the required statutory bonds and certificates of insurance within the period of time specified in the Contract Documents.

The undersigned will begin work after award of Contract and a Notice to Proceed has been given as herein specified and will complete said work within the time specified in the Bidding Schedule.

5. The undersigned certifies that this Proposal is genuine and not sham or collusive, or made in the interest or on behalf of a person not herein named, and the undersigned has not directly or indirectly induced or solicited any other bidder to put in a sham bid nor induced any other person, firm, or corporation to refrain from bidding. The undersigned has not in any manner sought by collusion to secure for himself any advantage over any other bidder.

6. The undersigned will accept an award and enter into a Contract for all work scheduled herein on which he puts in a bid. The awards for such work are to be entirely at the discretion of the City after evaluation of the bids as submitted. The undersigned agrees that the City shall recover or retain as a bid bond forfeiture an amount equal to the difference between the low bid and amount of the bid of the bidder with whom the City enters into a Contract, and the surplus, if any, shall be returned to the lowest bidder in accordance with the provisions of the Public Contract Code Sections 20172 and 20174 in the event of his failure to execute a Contract and furnish required bonds and insurance therefor within the time provided.

BIDDER'S DECLARATION (Continued)

7. The undersigned bidder stated under penalty of perjury that the representations made in submitting this bid are, to the best of his/her knowledge, true, accurate, and complete.

Respectfully submitted,

New Dynasty Construction Co.
Contractor's Business Name

3002 Dow Avenue, Suite 204
Business Address: Street

Tustin CA 92780
City State Zip

949-502-6400
Business Phone Number

11/21/2023
Date

Sherwin Chegini President
Name Title

Tustin CA 92780
City State Zip

Sherwin Chegini
Contractor (Print) Title

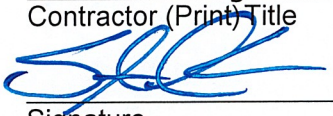

President
Signature Title

971321
Contractor's License No. and Classification

949-502-6404
Business Fax Number

3002 Dow Avenue, Suite 204
Tustin, CA 92780
Residence: Street

949-502-6400
Residence Phone Number

Note: If the bid is made by an individual, it must be signed with the full name of the bidder, whose address must be given: if it is made by a firm, it must be signed in the co-partnership's name by a general partner thereof, who shall also sign his or her own name, and the name and full address of each partner (general and/or limited) must be given; and if it is made by a corporation, it must be signed by a properly authorized officer, the corporate name shall be set forth, and the corporate seal shall be affixed.

BID PROPOSAL

PROJECT NO. JN 978

NON-COLLUSION AFFIDAVIT

(To be executed by Bidder and submitted with Bid)

State of California

County of Los Angeles

Sherwin Chegini being first duly sworn, deposes and says that he or she is President of New Dynasty Construction the party making the foregoing bid, that the bid is not made in the interest of, or on the behalf of, any undisclosed person, partnership, company, association, organization, or corporation; that the bid is genuine and not collusive or sham; that the bidder has not directly or indirectly colluded, conspired, connived, or agreed with any bidder or anyone else to put in a sham bid, or that anyone shall refrain from bidding; that the bidder has not in any manner, directly or indirectly, sought by agreement, communication, or conference with anyone to fix the bid price of the bidder or any other bidder, or to fix any overhead, profit, or cost element of that of any other bidder, or to secure any advantage against the public body awarding the contract of anyone interested in the proposed contract; that all statements contained in the bid are true; and, further, that the bidder has not, directly or indirectly, submitted his or her bid price or any breakdown thereof, or the contents thereof, or divulged information or data relative thereto, or paid, and will not pay fee to any corporation, or agent thereof to effectuate a collusive or sham bid.

New Dynasty Construction Co.
NAME OF BIDDER

SIGNATURE OF BIDDER

3002 Dow Avenue, Suite 204
ADDRESS OF BIDDER

Tustin	CA	92780
CITY	STATE	ZIP

ALL SIGNATURES MUST BE WITNESSED BY NOTARY
(attach appropriate jurats)

CALIFORNIA JURAT **GOVERNMENT CODE § 8202**

A notary public or other officer completing this certificate verifies only the identity of the individual who signed the document to which this certificate is attached, and not the truthfulness, accuracy, or validity of that document.

State of California

County of Orange

Subscribed and sworn to (or affirmed) before me on

this 21st day of November, 20 23, by
Date *Month* *Year*

(1) Sherwin Chegini ----------

(and (2) ----------),
Name(s) of Signer(s)

proved to me on the basis of satisfactory evidence to be the person(s) who appeared before me.

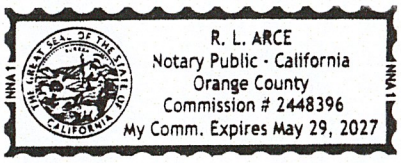

Signature _____
Signature of Notary Public

Place Notary Seal and/or Stamp Above

OPTIONAL

Completing this information can deter alteration of the document or fraudulent reattachment of this form to an unintended document.

Description of Attached Document

GARDENA COMMUNITY AQUATIC AND SENIOR CENTER

Title or Type of Document: Non-Collusion Affidavit

Document Date: 11/21/2023 Number of Pages: 1 pg.

Signer(s) Other Than Named Above: _____

©2018 National Notary Association

BID PROPOSAL

PROJECT NO. JN 978

DECLARATION OF ELIGIBILITY TO CONTRACT

[Labor Code Section 1777.1; Public Contract Code Section 6109]

The undersigned, a duly authorized representative of the contractor, certifies and declares that:

1. The undersigned contractor is aware of Sections 1777.1 and 1777.7 of the California Labor Code, which prohibit a contractor or subcontractor who has been found by the Labor Commissioner or the Director of Industrial Relations to be in violation of certain provisions of the Labor Code, from bidding on, being awarded, or performing work as a subcontractor on a public works project for specified periods of time.

2. The undersigned contractor is not ineligible to bid on, be awarded or perform work as a subcontractor on a public works project by virtue of Sections 1771.1 or 1777.7 of the California Labor Code or any other provision of law.

3. The undersigned contractor is aware of California Public Contract Code Section 6109, which states:

> "(a) A public entity, as defined in Section 1100 [of the Public Contract Code], may not permit a contractor or subcontractor who is ineligible to bid or work on, or be awarded, a public works project pursuant to Section 1777.1 or 1777.7 of the Labor Code to bid on, be awarded, or perform work as a subcontractor on, a public works project. Every public works project shall contain a provision prohibiting a contractor from performing work on a public works project with a subcontractor who is ineligible to perform work on the public works project pursuant to Section 1771.1 or 1777.7 of the Labor Code."
>
> "(b) Any contract on a public works project entered into between a contractor and a debarred subcontractor is void as a matter of law. A debarred subcontractor may not receive any public money for performing work as a subcontractor on a public works contract, and any public money that may have been paid to a debarred subcontractor by a contractor on the project shall be returned to the awarding body. The contractor shall be responsible for the payment of wages to workers of a debarred subcontractor who has been allowed to work on the project."

4. The undersigned contractor has investigated the eligibility of each and every subcontractor the undersigned contractor intends to use on this public works project, and has determined that none of them are ineligible to perform work as a subcontractor on a public works project by virtue of the foregoing provisions of the Public Contract Code, Sections 1771.1 or 1777.7 of the Labor Code, or any other provision of law.

I declare under penalty of perjury under the laws of the State of California that the foregoing is true and correct. Executed this 21 day of November, 2023, at 3002 Dow Ave. Tustin, *(place of execution)*, California 92780.

Signature: _____ Name: Sherwin Chegini

Title: President Company: New Dynasty Construction Co.

BID PROPOSAL

PROJECT NO. JN 978

BID BOND

KNOW ALL MEN BY THESE PRESENTS:

THAT New Dynasty Construction Co., as Principal,
and Nationwide Mutual Insurance Company, as Surety,
are held firmly bound unto the City of Gardena in the sum of ~~$----------~~;
TEN PERCENT (10%) of the Total Amount Bid----------~~DOLLARS~~;
(not less than ten percent of total amount of bid)
for the payment of which sum well and truly to be made, we bind ourselves, our heirs, executors, administrators, successors, and assigns, jointly and severally, firmly by these presents.

WHEREAS, said Principal has submitted a bid to the City to perform all work required under the following:

PROJECT: **GARDENA COMMUNITY AQUATIC AND SENIOR CENTER**

NOW, THEREFORE, if said Principal is awarded a Contract by the City and, within the time and in the manner required in the Specifications for said project, enters into the written form of Contract bound with said Specifications and furnishes the required bonds, one to guarantee faithful performance and the other to guarantee payment for labor and materials, then this obligation shall be null and void, otherwise it shall remain in full force and effect. In the event suit is brought upon this bond by the City and judgment is recovered, said Surety shall pay all costs incurred by the City in such suit, including a reasonable attorneys' fee to be fixed by the court. Surety hereby waives the provisions of California Civil Code §2845.

SIGNED AND SEALED, this 14th day of November, 2023.

New Dynasty Construction Co. (SEAL)
Principal

BY: Sherwin Chegini - President
Signature

Nationwide Mutual Insurance Company
/ (SEAL)
Surety

BY: NOV 14 2023
Signature Edward N. Hackett, Attorney-in-Fact

Note: This bond must be dated, all signatures must be notarized, and evidence of the authority of any person signing as attorney–in-fact must be attached.

CALIFORNIA ACKNOWLEDGMENT CIVIL CODE § 1189

A notary public or other officer completing this certificate verifies only the identity of the individual who signed the document to which this certificate is attached, and not the truthfulness, accuracy, or validity of that document.

State of California
County of Orange }

On November 21, 2023 *Date* before me, R. L. Arce, Notary Public *Here Insert Name and Title of the Officer*,

personally appeared Sherwin Chegini *Name(s) of Signer(s)*,

who proved to me on the basis of satisfactory evidence to be the person(s) whose name(s) is/are subscribed to the within instrument and acknowledged to me that he/she/they executed the same in his/her/their authorized capacity(ies), and that by his/her/their signature(s) on the instrument the person(s), or the entity upon behalf of which the person(s) acted, executed the instrument.

R. L. ARCE
Notary Public - California
Orange County
Commission # 2448396
My Comm. Expires May 29, 2027

Place Notary Seal and/or Stamp Above

I certify under PENALTY OF PERJURY under the laws of the State of California that the foregoing paragraph is true and correct.

WITNESS my hand and official seal.

Signature _____ *Signature of Notary Public*

OPTIONAL

Completing this information can deter alteration of the document or fraudulent reattachment of this form to an unintended document.

Description of Attached Document

Title or Type of Document: Bid Bond - GARDENA COMMUNITY AQUATIC AND SENIOR CENTER

Document Date: 11/14/2023 Number of Pages: 1 pg.

Signer(s) Other Than Named Above: _____

Capacity(ies) Claimed by Signer(s)

Signer's Name: _____	Signer's Name: _____
☐ Corporate Officer – Title(s): _____	☐ Corporate Officer – Title(s): _____
☐ Partner – ☐ Limited ☐ General	☐ Partner – ☐ Limited ☐ General
☐ Individual ☐ Attorney in Fact	☐ Individual ☐ Attorney in Fact
☐ Trustee ☐ Guardian or Conservator	☐ Trustee ☐ Guardian or Conservator
☐ Other: _____	☐ Other: _____
Signer is Representing: _____	Signer is Representing: _____

©2018 National Notary Association

CALIFORNIA ALL-PURPOSE ACKNOWLEDGMENT

A notary public or other officer completing this certificate verifies only the identity of the individual who signed the document to which this certificate is attached, and not the truthfulness, accuracy, or validity of that document.

STATE OF CALIFORNIA

County of Orange }

On NOV 14 2023 (Date) before me, C. Maestas (Insert Name of Notary exactly as it appears on the official seal), Notary Public,

personally appeared Edward N. Hackett (Name(s) of Signer(s)),

who proved to me on the basis of satisfactory evidence to be the person(s) whose name(s) is/are subscribed to the within instrument and acknowledged to me that he/she/they executed the same in his/her/their authorized capacity(ies), and that by his/her/their signature(s) on the instrument the person(s), or the entity upon behalf of which the person(s) acted, executed the instrument.

I certify under PENALTY OF PERJURY under the laws of the State of California that the foregoing paragraph is true and correct.

Witness my hand and official seal.

C. MAESTAS
Notary Public - California
Orange County
Commission # 2456669
My Comm. Expires Aug 1, 2027

Place Notary Seal Above

Signature _____
Signature of Notary Public

OPTIONAL

Though the information below is not required by law, it may prove valuable to persons relying on the document and could prevent fraudulent removal and reattachment of the form to another document.

Description of Attached Document

Title or Type of Document: New Dynasty Construction Co Bid Bond

Document Date: NOV 14 2023 Number of Pages: 1

Signer(s) Other Than Named Above: None

Capacity(ies) Claimed by Signer(s)

Signer's Name: Edward N. Hackett
- ☐ Individual
- ☐ Corporate Officer — Title(s): _____
- ☐ Partner ☐ Limited ☐ General
- ☑ Attorney in Fact
- ☐ Trustee
- ☐ Guardian or Conservator
- ☐ Other: _____

Signer is Representing: _____

RIGHT THUMBPRINT OF SIGNER
Top of thumb here

Signer's Name: None
- ☐ Individual
- ☐ Corporate Officer — Title(s): _____
- ☐ Partner ☐ Limited ☐ General
- ☐ Attorney in Fact
- ☐ Trustee
- ☐ Guardian or Conservator
- ☐ Other: _____

Signer is Representing: _____

RIGHT THUMBPRINT OF SIGNER
Top of thumb here

Power of Attorney

KNOW ALL MEN BY THESE PRESENTS THAT:

Nationwide Mutual Insurance Company, an Ohio corporation

hereinafter referred to severally as the "Company" and collectively as "the Companies" does hereby make, constitute and appoint:

EDWARD N. HACKETT

each in their individual capacity, its true and lawful attorney-in-fact, with full power and authority to sign, seal, and execute on its behalf any and all bonds and undertakings, and other obligatory instruments of similar nature, in penalties not exceeding the sum of

UNLIMITED

and to bind the Company thereby, as fully and to the same extent as if such instruments were signed by the duly authorized officers of the Company; and all acts of said Attorney pursuant to the authority given are hereby ratified and confirmed.

This power of attorney is made and executed pursuant to and by authority of the following resolution duly adopted by the board of directors of the Company:

"RESOLVED, that the president, or any vice president be, and each hereby is, authorized and empowered to appoint attorneys-in-fact of the Company, and to authorize them to execute and deliver on behalf of the Company any and all bonds, forms, applications, memorandums, undertakings, recognizances, transfers, contracts of indemnity, policies, contracts guaranteeing the fidelity of persons holding positions of public or private trust, and other writings obligatory in nature that the business of the Company may require; and to modify or revoke, with or without cause, any such appointment or authority; provided, however, that the authority granted hereby shall in no way limit the authority of other duly authorized agents to sign and countersign any of said documents on behalf of the Company."

"RESOLVED FURTHER, that such attorneys-in-fact shall have full power and authority to execute and deliver any and all such documents and to bind the Company subject to the terms and limitations of the power of attorney issued to them, and to affix the seal of the Company thereto; provided, however, that said seal shall not be necessary for the validity of any such documents."

This power of attorney is signed and sealed under and by the following bylaws duly adopted by the board of directors of the Company.

Execution of Instruments. Any vice president, any assistant secretary or any assistant treasurer shall have the power and authority to sign or attest all approved documents, instruments, contracts, or other papers in connection with the operation of the business of the company in addition to the chairman of the board, the chief executive officer, president, treasurer or secretary; provided, however, the signature of any of them may be printed, engraved, or stamped on any approved document, contract, instrument, or other papers of the Company.

IN WITNESS WHEREOF, the Company has caused this instrument to be sealed and duly attested by the signature of its officer the 20th day of August, 2021.

Antonio C. Albanese, **Vice President** of Nationwide Mutual Insurance Company

ACKNOWLEDGMENT

STATE OF NEW YORK COUNTY OF NEW YORK: ss

On this 20th day of August, 2021, before me came the above-named officer for the Company aforesaid, to me personally known to be the officer described in and who executed the preceding instrument, and he acknowledged the execution of the same, and being by me duly sworn, deposes and says, that he is the officer of the Company aforesaid, that the seal affixed hereto is the corporate seal of said Company, and the said corporate seal and his signature were duly affixed and subscribed to said instrument by the authority and direction of said Company.

Stephanie Rubino McArthur
Notary Public, State of New York
No. 02MC6270117
Qualified in New York County
Commission Expires October 19, 2024

Notary Public
My Commission Expires
October 19, 2024

CERTIFICATE

I, Laura B. Guy, Assistant Secretary of the Company, do hereby certify that the foregoing is a full, true and correct copy of the original power of attorney issued by the Company; that the resolution included therein is a true and correct transcript from the minutes of the meetings of the boards of directors and the same has not been revoked or amended in any manner; that said Antonio C. Albanese was on the date of the execution of the foregoing power of attorney the duly elected officer of the Company, and the corporate seal and his signature as officer were duly affixed and subscribed to the said instrument by the authority of said board of directors; and the foregoing power of attorney is still in full force and effect.

IN WITNESS WHEREOF, I have hereunto subscribed my name as Assistant Secretary, and affixed the corporate seal of said Company this 14th day of November, 2023

Assistant Secretary

BDJ 1(08-21)00

No. 1805-1

STATE OF CALIFORNIA

DEPARTMENT OF INSURANCE

SAN FRANCISCO

Amended

Certificate of Authority

THIS IS TO CERTIFY *that, pursuant to the Insurance Code of the State of California,*

Nationwide Mutual Insurance Company

of Ohio, organized under the laws of Ohio, subject to its Articles of Incorporation or other fundamental organizational documents, is hereby authorized to transact within this State, subject to all provisions of this Certificate, the following classes of insurance:

Fire, Marine, Surety, Disability, Plate Glass, Liability, Workers' Compensation, Common Carrier Liability, Boiler and Machinery, Burglary, Sprinkler, Team and Vehicle, Automobile, Aircraft, Legal, and Miscellaneous

as such classes are now or may hereafter be defined in the Insurance Laws of the State of California.

THIS CERTIFICATE *is expressly conditioned upon the holder hereof now and hereafter being in full compliance with all, and not in violation of any, of the applicable laws and lawful requirements made under authority of the laws of the State of California as long as such laws or requirements are in effect and applicable, and as such laws and requirements now are, or may hereafter be changed or amended.*

IN WITNESS WHEREOF, *effective as of the 22nd day of May, 2013, I have hereunto set my hand and caused my official seal to be affixed this 22nd day of May, 2013.*

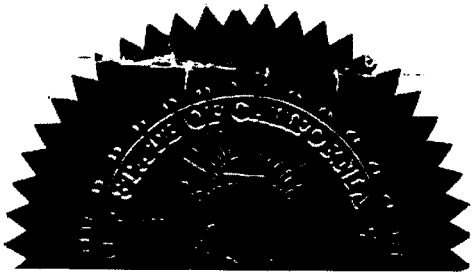

Dave Jones
Insurance Commissioner

BID PROPOSAL

PROJECT NO. JN 978

DESIGNATION OF SUBCONTRACTORS

In compliance with the "Subletting and Subcontracting Fair Practices Act" being Sections 4100-4113 of the Public Contract Code of the State of California, and any amendments thereto, each bidder shall set forth below the name and location of the place of business of each subcontractor who will perform work or labor or render service to the prime contractor in or about the construction of the work or improvement in an amount in excess of one-half (1/2) of one percent (1%) of the prime contractor's total bid, and shall further set forth the portion of the work which will be done by each subcontractor. Only one subcontractor for each such portion shall be listed.

If the contractor fails to specify a subcontractor for any portion of the work to be performed under the contract, he shall be deemed to have agreed to perform such portion himself, and he shall not be permitted to subcontract that portion of the work except under the conditions hereinafter set forth.

Subletting or subcontracting of any portion of the work to which subcontractor was designated in the original bid shall only be permitted in cases of public emergency or necessity, and then only after a finding reduced to writing as a public record of the legislative body of the City.

This page may be duplicated, if needed.

Portion of Work %	Subcontractor's Name & Address	Type of Work	State License Number	Class	D.I.R. Number
1%	UPLAND CONTRACTING INC	STEEL REINFORCEMENT	481317	C50	1000002198
	ONTARIO, CA 91761				
3.2%	CIVIL WORKS CORPORATION	CONCRETE	646315	C8	1000002876
	BELLFLOWER, CA 90706				
5.4%	CORNERSTONE MASONRY	MASONRY	436854	C29	1000017624
	RIVERSIDE, CA 92506				
5%	SARK INC	STRUC STEEL & METAL FABRICATIONS	1007232	C51	1000035923
	COVINA, CA 91723				
2%	WS Klem Contractor	Rough Carpentry	735376	C5	1000009829
	Anaheim, CA				

~~Not more than _____%.~~

BID PROPOSAL

PROJECT NO. JN 978

DESIGNATION OF SUBCONTRACTORS

In compliance with the "Subletting and Subcontracting Fair Practices Act" being Sections 4100-4113 of the Public Contract Code of the State of California, and any amendments thereto, each bidder shall set forth below the name and location of the place of business of each subcontractor who will perform work or labor or render service to the prime contractor in or about the construction of the work or improvement in an amount in excess of one-half (1/2) of one percent (1%) of the prime contractor's total bid, and shall further set forth the portion of the work which will be done by each subcontractor. Only one subcontractor for each such portion shall be listed.

If the contractor fails to specify a subcontractor for any portion of the work to be performed under the contract, he shall be deemed to have agreed to perform such portion himself, and he shall not be permitted to subcontract that portion of the work except under the conditions hereinafter set forth.

Subletting or subcontracting of any portion of the work to which subcontractor was designated in the original bid shall only be permitted in cases of public emergency or necessity, and then only after a finding reduced to writing as a public record of the legislative body of the City.

This page may be duplicated, if needed.

Portion of Work %	Subcontractor's Name & Address	Type of Work	State License Number	Class	D.I.R. Number
17.	Golden State Roofing	ROOFING	941468	C39	1000001624
	Carson, CA				
17.	Atlas Sheet Metal	SHEET METAL	742488	C43	1000012265
	Irvine, CA				
17.	STAR HARDWARE INC	DOORS, FRAMES & HARDWARE	766703	C-61 / D28	1000005159
	ONTARIO, CA 91761				
17.	SLATER GLASS & MIRROR	ALUMINUM FRAMES & GLAZING	893323	C17	1000004146
	ARCADIA, CA 91006				

~~Not more than _____%.~~

BID PROPOSAL

PROJECT NO. JN 978

DESIGNATION OF SUBCONTRACTORS

In compliance with the "Subletting and Subcontracting Fair Practices Act" being Sections 4100-4113 of the Public Contract Code of the State of California, and any amendments thereto, each bidder shall set forth below the name and location of the place of business of each subcontractor who will perform work or labor or render service to the prime contractor in or about the construction of the work or improvement in an amount in excess of one-half (1/2) of one percent (1%) of the prime contractor's total bid, and shall further set forth the portion of the work which will be done by each subcontractor. Only one subcontractor for each such portion shall be listed.

If the contractor fails to specify a subcontractor for any portion of the work to be performed under the contract, he shall be deemed to have agreed to perform such portion himself, and he shall not be permitted to subcontract that portion of the work except under the conditions hereinafter set forth.

Subletting or subcontracting of any portion of the work to which subcontractor was designated in the original bid shall only be permitted in cases of public emergency or necessity, and then only after a finding reduced to writing as a public record of the legislative body of the City.

This page may be duplicated, if needed.

Portion of Work %	Subcontractor's Name & Address	Type of Work	State License Number	Class	D.I.R. Number
2%	Martin Bros.	PORTLAND CEMENT PLASTERING	246274	C9, C2, C35	1000006679
	Jurupa Valley, CA				
2%	OSSUR DRYWALL & METAL FRAMING INC	GYPSUM BOARD	1085328	C9	1000951855
	RIVERSIDE, CA 92509				
1%	CONTINENTAL MARBLE AND TILE COMPANY	CERAMIC TILE	394	C54	1000002594
	CORONA, CA 92879				
1%	INLAND PACIFIC COATINGS INC	PAINTING	585185	C33	1000043948
	LYTLE CREEK, CA 92358				

~~Not more than _____%.~~

BID PROPOSAL

PROJECT NO. JN 978

DESIGNATION OF SUBCONTRACTORS

In compliance with the "Subletting and Subcontracting Fair Practices Act" being Sections 4100-4113 of the Public Contract Code of the State of California, and any amendments thereto, each bidder shall set forth below the name and location of the place of business of each subcontractor who will perform work or labor or render service to the prime contractor in or about the construction of the work or improvement in an amount in excess of one-half (1/2) of one percent (1%) of the prime contractor's total bid, and shall further set forth the portion of the work which will be done by each subcontractor. Only one subcontractor for each such portion shall be listed.

If the contractor fails to specify a subcontractor for any portion of the work to be performed under the contract, he shall be deemed to have agreed to perform such portion himself, and he shall not be permitted to subcontract that portion of the work except under the conditions hereinafter set forth.

Subletting or subcontracting of any portion of the work to which subcontractor was designated in the original bid shall only be permitted in cases of public emergency or necessity, and then only after a finding reduced to writing as a public record of the legislative body of the City.

This page may be duplicated, if needed.

Portion of Work %	Subcontractor's Name & Address	Type of Work	State License Number	Class	D.I.R. Number
20%	CALIFORNIA COMMERCIAL POOLS INC	SWIMMING POOL CONSTRUCTION / CONCRETE POOL DECK	415172	C53	1000001406
	GLENDORA, CA 91740-6721				
1.5%	SOCAL SHADE SAILS	PRE-ENGINEERED FABRIC SHADE STRUCTURE	862901	B	1000368274
	DEL MAR, CA 92014				
1%	SOUTHERN BLEACHER COMPANY INC	PERMANENT GRANDSTAND	564497	A	1000001223
	GRAHAM, TX 76046				
1%	SCHINDLER ELEVATOR CORPORATION	HYDRAULIC ELEVATOR	375733	C11	1000012845
	SYLMAR, CA 91342				
1%	FIRE SAFE GROUP INC	FIRE SPRINKLERS	566913	C16	1000442879
	REDONDO BEACH, CA 90278				

~~Not more than _____%.~~

BID PROPOSAL

PROJECT NO. JN 978

DESIGNATION OF SUBCONTRACTORS

In compliance with the "Subletting and Subcontracting Fair Practices Act" being Sections 4100-4113 of the Public Contract Code of the State of California, and any amendments thereto, each bidder shall set forth below the name and location of the place of business of each subcontractor who will perform work or labor or render service to the prime contractor in or about the construction of the work or improvement in an amount in excess of one-half (1/2) of one percent (1%) of the prime contractor's total bid, and shall further set forth the portion of the work which will be done by each subcontractor. Only one subcontractor for each such portion shall be listed.

If the contractor fails to specify a subcontractor for any portion of the work to be performed under the contract, he shall be deemed to have agreed to perform such portion himself, and he shall not be permitted to subcontract that portion of the work except under the conditions hereinafter set forth.

Subletting or subcontracting of any portion of the work to which subcontractor was designated in the original bid shall only be permitted in cases of public emergency or necessity, and then only after a finding reduced to writing as a public record of the legislative body of the City.

This page may be duplicated, if needed.

Portion of Work %	Subcontractor's Name & Address	Type of Work	State License Number	Class	D.I.R. Number
5%	Kincaid Industries	PLUMBING	695797	C36, C16,	1000022960
	Thousand Palms, CA				
4%	Anderson Air Conditioning	HVAC	1075333	C10, C20, C38	1000765095
	Fullerton, CA				
5%	TRI Power Electric	ELECTRICAL	1050901	C10	1000422663
	Upland CA				
1%	ELECTRIC SERVICE & SUPPLY CO	PHOTOVOLTAIC (SOLAR) SYSTEM	169577	C10	1000000171
	PASADENA, CA 91107				
1%	Tri Power Electric	LOW VOLTAGE - COMMUNICATIONS	1050901	C10	1000422663
	Upland CA				

~~Not more than _____%.~~

BID PROPOSAL

PROJECT NO. JN 978

DESIGNATION OF SUBCONTRACTORS

In compliance with the "Subletting and Subcontracting Fair Practices Act" being Sections 4100-4113 of the Public Contract Code of the State of California, and any amendments thereto, each bidder shall set forth below the name and location of the place of business of each subcontractor who will perform work or labor or render service to the prime contractor in or about the construction of the work or improvement in an amount in excess of one-half (1/2) of one percent (1%) of the prime contractor's total bid, and shall further set forth the portion of the work which will be done by each subcontractor. Only one subcontractor for each such portion shall be listed.

If the contractor fails to specify a subcontractor for any portion of the work to be performed under the contract, he shall be deemed to have agreed to perform such portion himself, and he shall not be permitted to subcontract that portion of the work except under the conditions hereinafter set forth.

Subletting or subcontracting of any portion of the work to which subcontractor was designated in the original bid shall only be permitted in cases of public emergency or necessity, and then only after a finding reduced to writing as a public record of the legislative body of the City.

This page may be duplicated, if needed.

Portion of Work %	Subcontractor's Name & Address	Type of Work	State License Number	Class	D.I.R. Number
17.	HOWARD CONTRACTING INC	DEMO & EARTHWORK	466400	C12, C21	1000006979
	HAWAIIAN GARDENS, CA 90716				
47.	Taylor Underground Utility Contractor	SITE UTILITIES	859932	C34	1000007532
	San Jacinto, CA				
27.	MARINA LANDSCAPE INC	LANDSCAPING & IRRIGATION	492862	C27	1000000079
	ORANGE, CA 92868				

~~Not more than _____%.~~

BID PROPOSAL

PROJECT NO. JN 978

DESIGNATION OF SUBCONTRACTORS

In compliance with the "Subletting and Subcontracting Fair Practices Act" being Sections 4100-4113 of the Public Contract Code of the State of California, and any amendments thereto, each bidder shall set forth below the name and location of the place of business of each subcontractor who will perform work or labor or render service to the prime contractor in or about the construction of the work or improvement in an amount in excess of one-half (1/2) of one percent (1%) of the prime contractor's total bid, and shall further set forth the portion of the work which will be done by each subcontractor. Only one subcontractor for each such portion shall be listed.

If the contractor fails to specify a subcontractor for any portion of the work to be performed under the contract, he shall be deemed to have agreed to perform such portion himself, and he shall not be permitted to subcontract that portion of the work except under the conditions hereinafter set forth.

Subletting or subcontracting of any portion of the work to which subcontractor was designated in the original bid shall only be permitted in cases of public emergency or necessity, and then only after a finding reduced to writing as a public record of the legislative body of the City.

This page may be duplicated, if needed.

Portion of Work %	Subcontractor's Name & Address	Type of Work	State License Number	Class	D.I.R. Number

~~Not more than _____%.~~

TO BE SUBMITTED WITH PROPOSAL

BID PROPOSAL

PROJECT NO. JN 978

DESIGNATION OF SUBCONTRACTORS

In compliance with the "Subletting and Subcontracting Fair Practices Act" being Sections 4100-4113 of the Public Contract Code of the State of California, and any amendments thereto, each bidder shall set forth below the name and location of the place of business of each subcontractor who will perform work or labor or render service to the prime contractor in or about the construction of the work or improvement in an amount in excess of one-half (1/2) of one percent (1%) of the prime contractor's total bid, and shall further set forth the portion of the work which will be done by each subcontractor. Only one subcontractor for each such portion shall be listed.

If the contractor fails to specify a subcontractor for any portion of the work to be performed under the contract, he shall be deemed to have agreed to perform such portion himself, and he shall not be permitted to subcontract that portion of the work except under the conditions hereinafter set forth.

Subletting or subcontracting of any portion of the work to which subcontractor was designated in the original bid shall only be permitted in cases of public emergency or necessity, and then only after a finding reduced to writing as a public record of the legislative body of the City.

This page may be duplicated, if needed.

Portion of Work %	Subcontractor's Name & Address	Type of Work	State License Number	Class	D.I.R. Number

~~Not more than _____%.~~

TO BE SUBMITTED WITH PROPOSAL

BID PROPOSAL

PROJECT NO. JN 978

DESIGNATION OF SUBCONTRACTORS

In compliance with the "Subletting and Subcontracting Fair Practices Act" being Sections 4100-4113 of the Public Contract Code of the State of California, and any amendments thereto, each bidder shall set forth below the name and location of the place of business of each subcontractor who will perform work or labor or render service to the prime contractor in or about the construction of the work or improvement in an amount in excess of one-half (1/2) of one percent (1%) of the prime contractor's total bid, and shall further set forth the portion of the work which will be done by each subcontractor. Only one subcontractor for each such portion shall be listed.

If the contractor fails to specify a subcontractor for any portion of the work to be performed under the contract, he shall be deemed to have agreed to perform such portion himself, and he shall not be permitted to subcontract that portion of the work except under the conditions hereinafter set forth.

Subletting or subcontracting of any portion of the work to which subcontractor was designated in the original bid shall only be permitted in cases of public emergency or necessity, and then only after a finding reduced to writing as a public record of the legislative body of the City.

This page may be duplicated, if needed.

Portion of Work %	Subcontractor's Name & Address	Type of Work	State License Number	Class	D.I.R. Number

~~Not more than _____%.~~

BID PROPOSAL

PROJECT NO. JN 978

GENEAL CONTRACTOR EXPERIENCE REQUIREMENTS

Contractor/Bidder certifies that it meets the qualifications and experience requirements established in the project specifications, plans and as follows: (Contractor may be immediately disqualified at the discretion of the City if the following conditions are not met)

General Contractor has, in the last ten (10) years, constructed at least three (3) comparable projects. The qualified comparable projects are as follows:

- Comparable projects in value of at least $5,000,000.
- (2) of the project must be public use aquatic facilities and include all aspects of pool construction including excavation, shell construction, pool electrical, pool plumbing, pool mechanical, and pool deck construction.
- (2) of the projects must demonstrate minimum two-story structural steel construction, with deep pile foundation and/or mat slab foundation.

Number of years as a contractor in construction work of this type: 12 years

Three (3) comparable projects at minimum (may additionally attach qualifications/ experiences):

1. Name (Firm/Agency): Fullerton Joint Union High School District
   Address: 1051 W. Bastanchury Rd, Fullerton, CA 92833
   Contact Person: Andy Kim Telephone No.: office:714-626-4384 cell: 714-458-9994
   Project Title: La Habra Aquatic Facility
   Project Location: 801 Highlander Ave., La Habra CA 90631
   Project Scope: New construction of aquatic facility for high school
   Date of Completion: September 2022 Contract Amount: $6,308,434.00

2. Name (Firm/Agency): Fullerton Joint Union High School District
   Address: 1051 W. Bastanchury Rd, Fullerton, CA 92833
   Contact Person: Andy Kim Telephone No.: office:714-626-4384 cell: 714-458-9994
   Title of Project: Buena Park High School New Pool
   Project Location: 8833 Academy Drive, Buena Park CA 90621
   Project Scope: Construction of an aquatic pool for high school / facility improvements

Date of Completion: November 2020 Contract Amount: $6,879,916.00

3. Name (Firm/Agency): Capistrano Unified School District
Address: 33122 Valle Road San Juan Capistrano, CA 92675
Contact Person: Greg Smith Telephone No.: 714-541-2390
Title of Project: Aliso Viejo High School 2-Story STEM Building
Project Location: 28000 Wolverine Way, Aliso Viejo, CA 92656
Project Scope: Construction of a 2-story labratory classroom STEM building (Building F)

Date of Completion: October 2022 Contract Amount: $11,531,439.14

NOTE: If requested by the City, the bidder shall furnish a certified financial statement, references, and other information sufficiently comprehensive to permit an appraisal of his current financial condition.

Bidder's Signature 

BID PROPOSAL

PROJECT NO. JN 978

SWIMMING POOL SUBCONTRACTOR EXPERIENCE REQUIREMENTS

Contractor/Bidder certifies that it meets the qualifications and experience requirements established in the project specifications, plans and as follows: (Contractor may be immediately disqualified at the discretion of the City if the following conditions are not met)

- Subcontractor has, in the last ten (10) years, constructed at least three (3) commercially designed municipal and/or public-use swimming pools, each of which have incorporated a minimum size of 4,000 square feet of water surface area (200,000 Gallons) with a concrete and ceramic tile perimeter overflow gutter and self-modulating balance tank.

Subcontractor's Name: California Commercial Pools, Inc

1. Name (Firm/Agency): Chaffey Joint Union School District
   Address: 211 West Fifth Street, Ontario CA
   Contact Person: Bobby Slagle, Director of Operations Telephone No.: 909-988-8511
   Project Title: Chaffey High School
   Project Location: 1245 N. Euclid Ave. Ontario, CA
   Pool Area (SF or Gal) New 30 Meter Comp Pool complete with new pool deck, pool equipment & timing system
   Date of Completion: 12/14/2020 Contract Amount: $ 2,135,000.00

2. Name (Firm/Agency): Garden Grove Unified School District
   Address: 8211 Lampson Ave, Garden Grove CA
   Contact Person: Jeff Thrift, Project Manager Telephone No.: 714-663-6443
   Project Title: La Quinta HS/ Pacifica HS
   Project Location: 10372 McFadden Ave. Westminster, CA & 6851 Lampson Ave. Garden Grove, CA
   Pool Area (SF or Gal) New 25 meter X 25 yard comp/waterpolo pool. All New pool and mechanical equipment.
   Date of Completion: 03/01/2020 Contract Amount: $ 2,910,600.00

3. Name (Firm/Agency): Fresno United School District
   Address: 2309 Tulare Ave. Fresno, CA
   Contact Person: Mitch Gaasch, Project Manager Telephone No.: 559-457-6119
   Project Title: Roosevelt HS Pool Complex
   Project Location: 4250 E. Tulare Ave. Fresno, CA
   Pool Area (SF or Gal) 35M x 25Y Pool with Decks
   Date of Completion: 03/01/2019 Contract Amount: $ 1,945,600.00

NOTE: If requested by the City, the bidder shall furnish a certified financial statement, references, and other information sufficiently comprehensive to permit an appraisal of his current financial condition.

Bidder's Signature _____

Brett Smith, Vice President ***TO BE SUBMITTED WITH PROPOSAL***

BID PROPOSAL

PROJECT NO. JN 978

CONCRETE POOL DECK SUBCONTRACTOR EXPERIENCE REQUIREMENTS

Contractor/Bidder certifies that it meets the qualifications and experience requirements established in the project specifications and plans and as follows: (Contractor may be immediately disqualified at the discretion of the City if the following conditions are not met)

- Subcontract has, in the last ten (10) years, constructed at least three (3) commercially designed pool decks, each of which have had either a cantilevered deck over gutter system, or a perimeter "rim flow" pool gutters system. Each of which has incorporated a minimum size of 4,000 square feet of water surface area of the swimming pool.

Subcontractor's Name: California Commercial Pools, Inc

1. Name (Firm/Agency): Chaffey Joint Union School District
   Address: 211 West Fifth Street, Ontario CA
   Contact Person: Bobby Slagle, Director of Operations Telephone No.: 909-988-8511
   Project Title: Chaffey High School
   Project Location: 1245 N. Euclid Ave. Ontario, CA
   Water Surface Area(SF) New 30M Comp Pool with New Decks
   Date of Completion: 12/14/2020 Contract Amount: $ 2,135,000.00

2. Name (Firm/Agency): City of El Centro
   Address: 1275 W Main Street, El Centro CA
   Contact Person: Javy Luna, Associate Engineer Telephone No.: 760-337-9031
   Project Title: El Centro Aquatic Center
   Project Location: 400-500 Park Avenue , El Centro, CA
   Water Surface Area(SF) (1) 25Y x 59', (2) 25Y x 28', Lazy River & New Decks
   Date of Completion: 10/01/2019 Contract Amount: $ 4,340,500.00

3. Name (Firm/Agency): Fresno Unified School District
   Address: 2309 Tulare St. Fresno, CA
   Contact Person: Mitch Gaasch, Project Manager Telephone No.: 559-457-6119
   Project Title: Roosevelt HS Pool Complex
   Project Location: 4250 E. Tulare Ave. Fresno, CA
   Water Surface Area(SF) 35M x 25Y Pool with Decks
   Date of Completion: 03/01/2019 Contract Amount: $ 1,945,600.00

NOTE: If requested by the City, the bidder shall furnish a certified financial statement, references, and other information sufficiently comprehensive to permit an appraisal of his current financial condition.

Bidder's Signature _____

Brett Smith, Vice President ***TO BE SUBMITTED WITH PROPOSAL***

BID PROPOSAL

PROJECT NO. JN 978

CERTIFICATE OF NON-DISCRIMINATION BY CONTRACTORS

As suppliers of goods or services to the City, the firm listed below certifies that it does not discriminate in its employment with regard to race, color, religion, sex, or national origin; that it is in compliance with all applicable federal, state, and local directives, and executive orders regarding non-discrimination in employment; and that it agrees to pursue positively and aggressively the principle of equal opportunity in employment.

We agree specifically:

1. To establish or observe employment policies which affirmatively promote opportunities for minority persons at all job levels.

2. To communicate this policy to all persons concerned, including all company employees, outside recruiting services, especially those serving minority communities, and to the minority communities at large.

3. To take affirmative steps to hire minority employees within the company.

FIRM New Dynasty Construction Co.

TITLE OF PERSON SIGNING President

SIGNATURE

DATE 11-21-23

Please include any additional information available regarding equal opportunity employment programs now in effect within your company:

NA

BID PROPOSAL

PROJECT NO. JN 978

CERTIFICATION REGARDING DEBARMENT, SUSPENSION, INELIGIBILITY AND VOLUNTARY EXCLUSION – PRIMARY COVERED TRANSACTIONS

(BEFORE COMPLETING CERTIFICATION, READ INSTRUCTIONS ON NEXT PAGE)

The Contractor shall not perform Work with any Subcontractor that has been debarred or suspended pursuant to California Labor Code Section 1777.1 or any other federal or State law providing for the debarment of contractors from public works. The Contractor and Subcontractors shall not be debarred or suspended throughout the duration of the Contract pursuant to Labor Code Section 1777.1 or any other federal or State law providing for the debarment of contractors from public works. If the Contractor or any Subcontractor becomes debarred or suspended during the duration of the Project, the Contractor shall immediately notify the City.

1. The prospective primary participant certifies to the best of its knowledge and belief, that it and its principals:

    a. Are not presently debarred, suspended, proposed for debarment, declared ineligible, or voluntarily excluded from covered transactions by any Federal department or agency;

    b. Have not within a 5-year period preceding this proposal been convicted of or had a civil judgment rendered against them for commission of fraud or a criminal offense in connection with obtaining, attempting to obtain, or performing a public (Federal, State or local) transaction or contract under a public transaction; violation of Federal or State antitrust statutes or commission of embezzlement, theft, forgery, bribery, falsification or destruction of records, making false statement, or receiving stolen property;

    c. Are not presently indicted for or otherwise criminally or civilly charged by a governmental entity (Federal, State or local) with commission of any of the offenses enumerated in paragraph 1b of this certification; and

    d. Have not within a 5-year period preceding this application/proposal had one or more public transactions (Federal, State or local) terminated for cause or default.

2. Where the prospective primary participant is unable to certify to any of the statements in this certification, such prospective participant shall attach an explanation to this proposal.

Signature: _____ Name: Sherwin Chegini

Title: President Company: New Dynasty Construction Co.

CERTIFICATION REGARDING DEBARMENT, SUSPENSION, INELIGIBILITY AND VOLUNTARY EXCLUSION – PRIMARY COVERED TRANSACTIONS (Continued)

INSTRUCTIONS FOR CERTIFICATION

1. By signing and submitting this proposal, the prospective primary participant is providing the certification set out below.
2. The inability of a person to provide the certification required below will not necessarily result in denial of participation in this covered transaction. The prospective participant shall submit an explanation of why it cannot provide the certification set out below. The certification or explanation will be considered in connection with the department or agency's determination whether to enter into this transaction. However, failure of the prospective primary participant to furnish a certification or an explanation shall disqualify such person from participation in this transaction.
3. The certification in this clause is a material representation of fact upon which reliance was placed when the department or agency determined to enter into this transaction. If it is later determined that the prospective primary participant knowingly rendered an erroneous certification, in addition to other remedies available to the Federal Government, the department or agency may terminate this transaction for cause or default.
4. The prospective primary participant shall provide immediate written notice to the department or agency to which this proposal is submitted if at any time the prospective primary participant learns that its certification was erroneous when submitted or has become erroneous by reason of changed circumstances.
5. The terms "covered transaction," "debarred," "suspended," "ineligible," "lower tier covered transaction," "participant," "person," "primary covered transaction," "principal," "proposal," and "voluntarily excluded," as used in this clause, have the meanings set out in the Definitions and Coverage sections of the rules implementing Executive Order 12549. You may contact the department or agency to which this proposal is submitted for assistance in obtaining a copy of those regulations (13 CFR Part 145).
6. The prospective primary participant agrees by submitting this proposal that, should the proposed covered transaction be entered into, it shall not knowingly enter into any lower tier covered transaction with a person who is debarred, suspended, declared ineligible, or voluntarily excluded from participation in this covered transaction, unless authorized by the department or agency entering into this transaction.
7. The prospective primary participant further agrees by submitting this proposal that it will include the clause titled "Certification Regarding Debarment, Suspension, Ineligibility and Voluntary Exclusion--Lower Tier Covered Transactions," provided by the department or agency entering into this covered transaction, without modification, in all lower tier covered transactions and in all solicitations for lower tier covered transactions.
8. A participant in a covered transaction may rely upon a certification of a prospective participant in a lower tier covered transaction that it is not debarred, suspended, ineligible, or voluntarily excluded from the covered transaction, unless it knows that the certification is erroneous. A participant may decide the method and frequency by which it determines the ineligibility of its principals. Each participant may, but is not required to, check the Nonprocurement List.
9. Nothing contained in the foregoing shall be construed to require establishment of a system of records in order to render in good faith the certification required by this clause. The knowledge and information of a participant is not required to exceed that which is normally possessed by a prudent person in the ordinary course of business dealings.
10. Except for transactions authorized under paragraph 6 of these instructions, if a participant in a covered transaction knowingly enters into a lower tier covered transaction with a person who is suspended, debarred, ineligible, or voluntarily excluded from participation in this transaction, in addition to other remedies available to the Federal Government, the department or agency may terminate this transaction for cause or default.

31591 Camino Capistrano
San Juan Capistrano, CA 92675
www.RJMdesigngroup.com
[949] 493-2690 *fax*
[949] 493-2600 *phone*

Community Inspired Spaces
RJM DESIGN GROUP

September 23, 2022
Allan Rigg
City Engineer
City of Gardena, CA

Re: Proposal for Professional Design Services –Gardena Aquatics and Senior Community Center Preparation of Design-Build requirements for a Photovoltaic (PV) Generating system.

Dear Allan:

We are pleased to submit this scope of work and fee proposal for the Gardena Aquatics and Senior Community Center Project preparation of Design-Build requirements for a Photovoltaic (PV) Generating system.

1. Alternating Current (AC) Side Specification – this Scope of Work shall include Plans and Specifications for all components on AC side of inverter to include – AC cabling feeder, service disconnects, net metering equipment and tie into main electrical service assembly.
2. Direct Current (DC) Side Specification – this Scope of Work shall include Plans and Specifications for all components on DC side of inverter, including DC to AC inverter, DC cabling and collectors and PV panel array with racking system to connect to roof structure.
3. Structural calculations to the roof for bolt, penetration and embedment.
4. Project management of added scope.

This work requires additional scope from our electrical, structural, mechanical and architectural subconsultants. Compensation for the above professional services will be billed hourly not to exceed $**28,350.00**. When incurred, project reimbursable expenses will be billed at cost plus 15% administrative fee in addition to the professional services fee.

All other terms and conditions shall remain consistent with our original agreement.

Thank you for the opportunity to submit this proposal. We look forward to working with you on this exciting project.

.618034
1, 2, 3, 5, 8, 13, 21, 34, 55, 89, 144, 233
1, 2, 3, 5, 8, 13, 21, 34, 55, 89, 144, 233

Sincerely,
RJM DESIGN GROUP, INC.

Eric Chastain
Principal Landscape Architect

From: Eric Chastain
To: Kevin Kwak
Subject: FW: Gardena Aquatic & Senior Center Project - Potential Security Camera Locations for future
Date: Wednesday, August 2, 2023 8:10:16 AM
Attachments: image001.png
image002.png

Caution! This message was sent from outside your organization.

Hi Kevin, please see below from our electrical engineer and let me know your thoughts.

Also want to check on the add service fee request, it will be $6,325.00
Just shoot me back that you are good with the fees and I'll follow up with a letter, I recall we discussed billing this as a reimbursable, please let me know.



Eric Chastain
Principal Landscape Architect
Office: 949.493.2600
Email: eric@rjmdesigngroup.com
Website: www.RJMdesigngroup.com
Instagram | Facebook | YouTube | Map

From: Steve Roth <sroth@fbaengr.com>
Sent: Tuesday, August 1, 2023 2:49 PM
To: Eric Chastain <eric@rjmdesigngroup.com>
Subject: FW: Gardena Aquatic & Senior Center Project - Potential Security Camera Locations for future

Are we producing LV plans? I think we should produce the plans as discussed and remove any duplicated items that are on the bid instructions. I thought the allowances were going to be for LV, security, and AV equipment so that money could be captured in the budget and included in the funding of the project.

Do we have approval of the add service? I need to get started on this soon.

Best regards,
Steve Roth
Project Manager

FBA ENGINEERING
949.852.9995 | f 949.852.1657
sroth@fbaengr.com | www.fbaengr.com

From: Tim Shaw <tshaw@griffinstructures.com>
Sent: Tuesday, August 1, 2023 2:38 PM
To: Kevin Kwak <kkwak@cityofgardena.org>; Steve Roth <sroth@fbaengr.com>; Eric Chastain <eric@rjmdesigngroup.com>
Cc: Tyler Page <Tyler@rjmdesigngroup.com>
Subject: RE: Gardena Aquatic & Senior Center Project - Potential Security Camera Locations for future

Electrical subs always want to exclude the low voltage work, and Low-Voltage subs want to exclude the infrastructure for their devices. So, we definitely should include conduits, j-boxes, cables, and terminated connections for the A/V systems, and j-boxes with cover plates and any conduits needed for the future camera/security devices. Backing plates and any other misc. accoutrements should also be captured somewhere as well - Either by amending existing bid line items or adding new bid lines get added to the list.

Ninyo & Moore
Geotechnical & Environmental Sciences Consultants

November 20, 2023
Proposal No. 04-3850A

Mr. Jon Hughes
Griffin Structures
1 Technology Drive
Building I, Suite 829
Irvine, California 92618

Subject: Proposal for Specialty Inspection Services
Community Aquatics and Senior Center Project
Gardena, California

Dear Mr. Hughes:

Ninyo & Moore is pleased to submit this proposal for specialty inspection services during construction Community Aquatics and Senior Center project located at 1654 W. 160th Street in Gardena, California. Our proposal was prepared based on our review of the project RFP for Construction Management and Inspection services and project plans, and our discussions with you. We understand that the project will generally consist of a new 2-story senior center, a new swimming pool, shade structures, bleachers and a pool building. The new Senior Center Building will generally consist of concrete spread footings and slab on grade, masonry walls, steel framing, metal stud interior walls and concrete over metal decking. The Pool Building will generally consist of concrete foundations and masonry walls. The pool core and walls will be shotcrete. The shade structures will be structural steel framed supported on concrete caisson foundations. Other site improvements include a masonry site wall, underground utilities, outdoor fitness equipment, concrete low walls and concrete pavement.

SCOPE OF SERVICES

Based on our conversations with you, our understanding of the proposed construction, and our experience with similar projects, we propose to provide the following scope of services:

- Project coordination, management and technical support including review of the project plans and specifications, and liner related submittals, work scheduling and distribution of test data.
- Attendance at pre-construction meetings and as-requested field meetings.
- Special Inspector services during concrete, shotcrete and masonry including inspection of reinforcing steel type, grade, location, lap splices, anchors and formwork, as well as inspection during grout, shotcrete and concrete placement.

- Specialty Inspector services during structural steel welding and bolting at the site and at the fabrication plant. Non-destructive examination of welds will be performed in accordance with the approved project documents.
- Preparation of daily reports and test data sheets to document the items inspected.
- Preparation of a Final Inspection Report for project close-out with the Building Department.

ASSUMPTIONS

Based on our project understanding, the following assumptions have been made in the preparation of our scope of services:

- Our services will be coordinated and scheduled on an as-needed basis, as requested by our client's authorized field representative.
- Our services are subject to prevailing wage requirements.

ESTIMATED FEES

We propose to provide our services on a time-and-materials basis in accordance with the attached Schedule of Fees. Our estimated fee for the scope described herein is presented in the attached Table 1.

Ninyo & Moore appreciates the opportunity to provide this proposal and we look forward to working with you.

Respectfully submitted,
NINYO & MOORE



Alfredo "Tino" Rodriguez
Principal, Construction Services

AR/rad

Attachments: Table 1 – Breakdown of Estimated Fee
Schedule of Fees

Table 1 - Breakdown of Estimated Fee						
Field Services						
Specialty Inspector - Concrete, Shotcrete and Masonry	980	hours	@	$ 115.00	/hour	$ 112,700.00
Specialty Inspector - Steel Welding and Bolting	360	hours	@	$ 115.00	/hour	$ 41,400.00
Non-Destructive Examination (Welds)	60	hours	@	$ 125.00	/hour	$ 7,500.00
Field Vehicle and Equipment Usage	1400	hours	@	$ 15.00	/hour	$ 21,000.00
				Subtotal		**$ 182,600.00**
Project Coordination, Management and Technical Support						
Senior Project Engineer/Geologist/Environmental Scientist	48	hours	@	$ 195.00	/hour	$ 9,360.00
Field Operations Manager	10	hours	@	$ 130.00	/hour	$ 1,300.00
Geotechnical/Envirnomental/Laboratory Assistant	8	hours	@	$ 95.00	/hour	$ 760.00
				Subtotal		**$ 11,420.00**
Report Preparation						
Senior Project Engineer/Geologist/Environmental Scientist	6	hours	@	$ 195.00	/hour	$ 1,170.00
Data Processor	2	hours	@	$ 75.00	/hour	$ 150.00
				Subtotal		**$ 1,320.00**
TOTAL ESTIMATED FEE						**$ 195,340.00**

Schedule of Fees

Hourly Charges for Personnel

Professional Staff

Principal Engineer/Geologist/Environmental Scientist/Certified Industrial Hygienist	$ 210
Senior Engineer/Geologist/Environmental Scientist	$ 200
Senior Project Engineer/Geologist/Environmental Scientist	$ 195
Project Engineer/Geologist/Environmental Scientist	$ 185
Senior Staff Engineer/Geologist/Environmental Scientist	$ 170
Staff Engineer/Geologist/Environmental Scientist	$ 155
GIS Analyst	$ 130
Technical Illustrator/CAD Operator	$ 110

Field Staff

Certified Asbestos/Lead Technician	$ 195
Field Operations Manager	$ 130
Nondestructive Examination Technician (UT, MT, LP)	$ 125
Supervisory Technician	$ 120
Special Inspector (Concrete, Masonry, Structural Steel, Welding, and Fireproofing)	$ 115
Senior Technician	$ 110
Technician	$ 110

Administrative Staff

Information Specialist	$ 90
Geotechnical/Environmental/Laboratory Assistant	$ 95
Data Processor	$ 75

Other Charges

Concrete Coring Equipment (includes technician)	$ 190/hr
Anchor Load Test Equipment (includes technician)	$ 190/hr
GPR Equipment	$ 180/hr
Inclinometer	$ 100/hr
Hand Auger Equipment	$ 80/hr
Rebar Locator (Pachometer)	$ 25/hr
Vapor Emission Kit	$ 65/kit
Nuclear Density Gauge	$ 12/hr
X-Ray Fluorescence	$ 70/hr
PID/FID	$ 25/hr
Air Sampling Pump	$ 10/hr
Field Vehicle	$ 15/hr
Expert Witness Testimony	$ 450/hr
Direct Expenses	Cost plus 15 %

Special equipment charges will be provided upon request.

Notes

For field and laboratory technicians and special inspectors, overtime rates at 1.5 times the regular rates will be charged for work performed in excess of 8 hours in one day Monday through Friday and all day on Saturday. Rates at twice the regular rates will be charged for all work in excess of 12 hours in one day, all day Sunday and on holidays.

Field technician and special inspection hours are charged at a 4-hour minimum, and 8-hour minimum for hours exceeding 4 hours.

Invoices are payable upon receipt. A service charge of 1.5 percent per month may be charged on accounts not paid within 30 days.

Our rates will be adjusted in conjunction with the increase in the Prevailing Wage Determination during the life of the project, as applicable.

The terms and conditions are included in Ninyo & Moore's Work Authorization and Agreement form.

Schedule of Fees for Laboratory Testing

SOILS

Atterberg Limits, D 4318, CT 204	$ 170
California Bearing Ratio (CBR), D 1883	$ 550
Chloride and Sulfate Content, CT 417 & CT 422	$ 175
Consolidation, D 2435, CT 219	$ 300
Consolidation, Hydro-Collapse only, D 2435	$ 150
Consolidation – Time Rate, D 2435, CT 219	$ 200
Direct Shear – Remolded, D 3080	$ 350
Direct Shear – Undisturbed, D 3080	$ 300
Durability Index, CT 229	$ 175
Expansion Index, D 4829, IBC 18-3	$ 190
Expansion Potential (Method A), D 4546	$ 170
Geofabric Tensile and Elongation Test, D 4632	$ 200
Hydraulic Conductivity, D 5084	$ 350
Hydrometer Analysis, D 422, CT 203	$ 220
Moisture, Ash, & Organic Matter of Peat/Organic Soils	$ 120
Moisture Only, D 2216, CT 226	$ 35
Moisture and Density, D 2937	$ 45
Permeability, CH, D 2434, CT 220	$ 300
pH and Resistivity, CT 643	$ 175
Proctor Density D1557, D 698, CT 216, AASHTO T-180	$ 220
Proctor Density with Rock Correction D 1557	$ 340
R-value, D 2844, CT 301	$ 375
Sand Equivalent, D 2419, CT 217	$ 125
Sieve Analysis, D 422, CT 202	$ 145
Sieve Analysis, 200 Wash, D 1140, CT 202	$ 100
Specific Gravity, D 854	$ 125
Thermal Resistivity (ASTM 5334, IEEE 442)	$ 925
Triaxial Shear, C.D, D 4767, T 297	$ 550
Triaxial Shear, C.U., w/pore pressure, D 4767, T 2297 per pt	$ 450
Triaxial Shear, C.U., w/o pore pressure, D 4767, T 2297 per pt	$ 350
Triaxial Shear, U.U., D 2850	$ 250
Unconfined Compression, D 2166, T 208	$ 180

MASONRY

Brick Absorption, 24-hour submersion, 5-hr boiling, 7-day, C 67	$ 70
Brick Compression Test, C 67	$ 55
Brick Efflorescence, C 67	$ 55
Brick Modulus of Rupture, C 67	$ 50
Brick Moisture as received, C 67	$ 45
Brick Saturation Coefficient, C 67	$ 60
Concrete Block Compression Test, 8x8x16, C 140	$ 70
Concrete Block Conformance Package, C 90	$ 500
Concrete Block Linear Shrinkage, C 426	$ 200
Concrete Block Unit Weight and Absorption, C 140	$ 70
Cores, Compression or Shear Bond, CA Code	$ 70
Masonry Grout, 3x3x6 prism compression, C 39	$ 45
Masonry Mortar, 2x4 cylinder compression, C 109	$ 35
Masonry Prism, half size, compression, C 1019	$ 120
Masonry Prism, Full size, compression, C 1019	$ 200

REINFORCING AND STRUCTURAL STEEL

Chemical Analysis, A 36, A 615	$ 135
Fireproofing Density Test, UBC 7-6	$ 90
Hardness Test, Rockwell, A 370	$ 80
High Strength Bolt, Nut & Washer Conformance, per assembly, A 325	$ 150
Mechanically Spliced Reinforcing Tensile Test, ACI	$ 175
Pre-Stress Strand (7 wire), A 416	$ 170
Reinforcing Tensile or Bend up to No. 11, A 615 & A 706	$ 75
Structural Steel Tensile Test: Up to 200,000 lbs., A 370	$ 90
Welded Reinforcing Tensile Test: Up to No. 11 bars, ACI	$ 80

CONCRETE

Compression Tests, 6x12 Cylinder, C 39	$ 35
Concrete Mix Design Review, Job Spec	$ 300
Concrete Mix Design, per Trial Batch, 6 cylinder, ACI	$ 850
Concrete Cores, Compression (excludes sampling), C 42	$ 120
Drying Shrinkage, C 157	$ 400
Flexural Test, C 78	$ 85
Flexural Test, C 293	$ 85
Flexural Test, CT 523	$ 95
Gunite/Shotcrete, Panels, 3 cut cores per panel and test, ACI	$ 275
Lightweight Concrete Fill, Compression, C 495	$ 80
Petrographic Analysis, C 856	$ 2,000
Restrained Expansion of Shrinkage Compensation	$ 450
Splitting Tensile Strength, C 496	$ 100
3x6 Grout, (CLSM), C 39	$ 55
2x2x2 Non-Shrink Grout, C 109	$ 55

ASPHALT

Air Voids, T 269	$ 85
Asphalt Mix Design, Caltrans (incl. Aggregate Quality)	$ 4,500
Asphalt Mix Design Review, Job Spec	$ 180
Dust Proportioning, CT LP-4	$ 85
Extraction, % Asphalt, including Gradation, D 2172, CT 382	$ 250
Extraction, % Asphalt without Gradation, D 2172, CT 382	$ 150
Film Stripping, CT 302	$ 120
Hveem Stability and Unit Weight D 1560, T 246, CT 366	$ 225
Marshall Stability, Flow and Unit Weight, T 245	$ 240
Maximum Theoretical Unit Weight, D 2041, CT 309	$ 150
Moisture Content, CT 370	$ 95
Moisture Susceptibility and Tensile Stress Ratio, T 238, CT 371	$ 1,000
Slurry Wet Track Abrasion, D 3910	$ 150
Superpave, Asphalt Mix Verification (incl. Aggregate Quality)	$ 4,900
Superpave, Gyratory Unit Wt., T 312	$ 100
Superpave, Hamburg Wheel, 20,000 passes, T 324	$ 1,000
Unit Weight sample or core, D 2726, CT 308	$ 100
Voids in Mineral Aggregate, (VMA) CT LP-2	$ 90
Voids filled with Asphalt, (VFA) CT LP-3	$ 90
Wax Density, D 1188	$ 140

AGGREGATES

Clay Lumps and Friable Particles, C 142	$ 180
Cleanness Value, CT 227	$ 180
Crushed Particles, CT 205	$ 175
Durability, Coarse or Fine, CT 229	$ 205
Fine Aggregate Angularity, ASTM C 1252, T 304, CT 234	$ 180
Flat and Elongated Particle, D 4791	$ 220
Lightweight Particles, C 123	$ 180
Los Angeles Abrasion, C 131 or C 535	$ 200
Material Finer than No. 200 Sieve by Washing, C 117	$ 90
Organic Impurities, C 40	$ 90
Potential Alkali Reactivity, Mortar Bar Method, Coarse, C 1260	$ 1,250
Potential Alkali Reactivity, Mortar Bar Method, Fine, C 1260	$ 950
Potential Reactivity of Aggregate (Chemical Method), C 289	$ 475
Sand Equivalent, T 176, CT 217	$ 125
Sieve Analysis, Coarse Aggregate, T 27, C 136	$ 120
Sieve Analysis, Fine Aggregate (including wash), T 27, C 136	$ 145
Sodium Sulfate Soundness, C 88	$ 450
Specific Gravity and Absorption, Coarse, C 127, CT 206	$ 115
Specific Gravity and Absorption, Fine, C 128, CT 207	$ 175

ROOFING

Roofing Tile Absorption, (set of 5), C 67	$ 250
Roofing Tile Strength Test, (set of 5), C 67	$ 250

Special preparation of standard test specimens will be charged at the technician's hourly rate.
Ninyo & Moore is accredited to perform the AASHTO equivalent of many ASTM test procedures.

City of Gardena

Gardena City Council Meeting

AGENDA REPORT SUMMARY

Agenda Item No. 16.B
Section: DEPARTMENTAL ITEMS - PUBLIC WORKS
Meeting Date: December 12, 2023

TO: THE HONORABLE MAYOR AND MEMBERS OF THE GARDENA CITY COUNCIL

AGENDA TITLE: Award Construction Contract for the Storm Drain Debris Screen FY 2020/2021 and 2021/2022 Project, JN 998 and 999, to United Strom Water, Inc. in the amount of $243,793.00. Additionally, Approve the Project Plans & Specifications, $8,784 Construction Support Services Contract with Cannon, 10% of Project Contingency and Declare California Environmental Quality Act (CEQA) Exemption.

COUNCIL ACTION REQUIRED:

Staff Recommendations:

- **Award Construction Contract**
- **Approve Project Plans and Specifications**
- **Approve Construction Support Services**
- **Approve Project Contingency**
- **Declare CEQA Exemption**

RECOMMENDATION AND STAFF SUMMARY:

In response to the Los Angeles Reginal Water Quality Control and its Water Code Section 13383 Order, the City of Gardena Statewide Trash Provisions Implementation Plan was prepared and submitted in 2017.

The first two out of five phases of the implementation was completed by 2017 and installed 189 Connector Pipe Screens (CPS) and/or Automatic Retractable Screens (ARS) out of 795 total catch basins in the City of Gardena. Subsequently, staff has prepared this third phase of the implementation plan and will be required to complete the remaining two phases by the year 2025.

This Phase of Storm Drain Debris Screens Project will install 211 Connector Pipe Screens (CPS) in catch basins throughout the City. CPS units are designed to prevent trash from getting to the ocean by capturing them at each catch basins. 179 of the catch basins belong to Los Angeles County Department of Public Works. Therefore, a permit is required for the installation. The remaining 32 catch basins belong to the City. The 211 catch basins were identified based on the priority land use characterizations (density level) as required by the Statewide Trash Provisions.

In October 2023, a bid request was published in CR Planwell, Gardena Valley News and the

City website and the following one (1) bid was received on November 8, 2023:

1. United Storm Water, Inc. $243,793.00

The L.A. County Department of Public Works requires that only pre-qualified contractors are eligible to bid for and install the debris screens. Presently, there are eight (8) pre-qualified contractors/manufactures in the County, and our responsible bidder, United Storm Water contractor is one of them. They are licensed in the State of California and have good and verified records of construction projects with various Counties and municipalities throughout Southern California. They have also previously completed two (2) projects for the City of Gardena. They will be required to meet all bonding and financial standards. The project is anticipated to start construction in March 2024 and will be completed in May 2024.

Construction support services for the project will be amended to the Cannon Corporation consultant's existing design contract as an additional service agreement in the amount of $8,784.

Staff recommends that the City Council approve the award of the construction contract for the Storm Drain Debris Screen FY 2020/2021 and FY 2021/2022 project, JN 998 and 999 to United Strom Water, Inc. in the amount of $243,793 and additionally:

a. Approve the Plans and Specifications.
b. Approve the Construction Support Services to Cannon Corporation in the amount of $8,784.
c. Approve 10% on the construction award amount, $24,400 to be utilized for construction Contingency.
d. Declare this project to be Categorically exempt under CEQA, Class 1, Section 15301, as rehabilitation of existing facilities.

FINANCIAL IMPACT/COST:

Source of Funds

JN 998, FY 2020-2021 Budget - Measure W Funds	$130,000
JN 999, FY 2021-2022 Budget - Measure W Funds	$165,000
Total	$295,000

Estimated Expenditures

Remaining Design Phase Expenditures	$8,904
Construction Support Services and Job Cost	$14,302
Construction Contract Award	$243,793
10% Construction Contingency	$24,400
Total	$291,399

ATTACHMENTS:

Bid Documents.pdf
Plans and Specifications.pdf
Notice of Exemption.pdf
Construction Support Services - Cannon.pdf

APPROVED:



_____
Clint Osorio, City Manager

UNITED STORM WATER, Inc.
Protecting Our Water Resources
14000 E. Valley Blvd. • City of Industry, CA 91746-2801

'23 NOV 8AM 9:46
CITY CLERK'S OFC

#1

ATTENTION: CITY, c/o CITY CLERK

(Bidder's Name and Address) United Storm Water, Inc.
14000 E. Valley Blvd., Industry CA 91746-2801

(Number and title of this project) Storm Drain Debris Screen FY 2020/2021 & FY 2021/2022, Various Locations
Project No. JN 998 & 999

City of Gardena
1700 W. 162nd Street
Gardena, CA 90247-3778

BID ON PROJECT NO. JN 998 & 999

NOTICE INVITING BID

STORM DRAIN DEBRIS SCREEN FY 2020/2021 & FY 2021/2022, VARIOUS LOCATIONS PROJECT NO. JN 998 & 999

City of Gardena
1700 W. 162nd Street
Gardena, California 90247-3778
Attn: City Clerk

Submitted by

UNITED STORM WATER, INC.
Protecting Our Water Resources

14000 E. Valley Blvd.
City of Industry, CA 91746

Robert Hernandez
Sales Representative
626/ 961-9326 Office
626/ 434-6285 Fax
626/ 290-5372 Cell
rHernandez@unitedstormwater.com

Bid Due Date: November 8, 2023 @ 1:00 PM

UNITED STORM WATER, INC.
Protecting Our Water Resources

November 8, 2023

City of Gardena
1700 W. 162nd Street
Gardena, CA 90247-3778
Attn: City Clerk

Subject: Project No. JN 998 & 999, Storm Drain Debris Screen FY 2020/2021 & FY 2021/2022, Various Locations

To whom it may concern,

United Storm Water, Inc. (United) is pleased to submit the enclosed response to the bid for Storm Drain Debris Screens to be installed throughout the City of Gardena. United has vast experience providing the services relative to this request, and our firm and proposal meet all the qualifications and requirements of the bid.

Identification of Bidder

Contractor Information	
Legal Name	United Storm Water, Inc.
Address	14000 E. Valley Blvd., City of Industry, CA 91746
Legal Form of Company	S-Corporation
Year Incorporated	1999 (24 years)
California Corporation No.	C2155753
Tax Identification No.	95-4742126
DIR Registration No.	1000012438
Contractor License No.	768583 (A, HAZ, C21, C27, C31, C42)
Parent Company	N/A
DBE Designation	Minority Business Enterprise (MBE)
Contact Name/Title	Lydia Perry, Secretary/Treasurer
Contact Email/Telephone	lydia@unitedstormwater.com; (626) 890-7078

United Storm Water is a Class A MBE Contractor founded in 1999 having demonstrated experience and expertise in storm water maintenance and BMP fabrication and installation. United holds the licenses and permits required for fulfillment of the contract and have successfully provided these services to numerous public agencies for (24) years including the City of Gardena. United is the Contractor who fabricated and installed its Connector Pipe Screen (CPS) and Automatic Retractable Screen (ARS) devices within a total of approximately (125) catch basins for the City of Gardena in 2015 and 2017.

Scope of Work

United shall provide all materials, labor, and equipment required to install a total of approximately (225) CPS devices within (32) City owned and (179) County owned catch basins. Services include traffic control, pre-installation cleaning of the catch basins to be retrofitted, obtaining and paying for County flood construction permit, and the painting of staff gauges. This project is subject to compliance monitoring and enforcement by the Department of Industrial Relations and prevailing wage rates apply. Per Addendum 1, the work is to be completed within (35) work days after notice to proceed pending receipt and closeout of County construction permit.

Products to be Installed

For this project United Storm Water proposes installation of its own CPS devices. United Storm Water's CPS devices have been approved by the Water Board, the Mosquito and Vector Control Association of California (MVCAC), and Los Angeles County Department of Public Works. Product names are provided below, and technical drawings are attached:

- USW-2M1 Fixed Screen With Swivel Access Plate (Fact Sheet, Exhibit A2.1)
- USW-2M2 Fixed Screen With Hinged Deflector Access (Fact Sheet, Exhibit A2.2)

Please note that Los Angeles County only approves the installation of fixed CPS screens, and removeable screens are prohibited by any manufacturer. With this said drawings of United's removable CPS models USW-1M1 and USW-1M2 were included in the bid specifications by the City in error, and the listing of Los Angeles County approved products (Appendix C) takes precedence.

United Storm Water offers quality services that aid public agencies to remain in compliance with local and regional storm water regulations in a professional and workmanlike manner. United is a firm who is a leader in its industry and is always evolving to provide its customers with leading edge solutions. Thank you for your consideration of our proposal!

Sincerely,

Lydia Perry

Lydia Perry, Secretary

14000 E. Valley Blvd., City of Industry, CA 91746 | Tel 626-890-7078 | Fax 626-434-6994 www.unitedstormwater.com

ATTACHMENTS

- Bid Forms
- Addenda
- CPS Technical Drawings

BID PROPOSAL (BP)

STORM DRAIN DEBRIS SCREEN FY 2020/2021 & FY 2021/2022,

VARIOUS LOCATIONS

PROJECT NO. JN998 & JN999

Contractor:	United Storm Water, Inc.
Address:	14000 E. Valley Blvd., Industry, CA 91746-2801
Phone:	(626) 961-9326
Fax:	(626) 434-6285
License No.:	768583 (A, HAZ, C21, C31, C42, C27)
D.I.R. No.	1000012438
Email:	lydia@unitedstormwater.com

To Be Submitted

WITH

Bid Package

BID PROPOSAL

PROJECT NO. JN 998 & 999

BID SCHEDULE

The undersigned, having examined the proposed Contract Documents titled:

STORM DRAIN DEBRIS SCREEN FY 2020/2021 & FY 2021/2022,
VARIOUS LOCATIONS
JN 998 & 999

and having visited the site and examined the conditions affecting the work, hereby proposes and agrees to furnish all labor, materials, equipment, and appliances, and to perform operations necessary to complete the work as required by said proposed Contract Documents and itemized bid schedule below. All work shall be completed within **75** **Working Days** from the date the Notice of Proceed is issued by the Engineer.

Item No.	Item Description	Unit	Approx. Quantity	Unit Price in Figures	Item Total
1	Traffic Control	LS	1	$500.00	$500.00
2	Install Connector Pipe Screen (CPS) in Existing City Catch Basin	EA	32	$863.00	$27,616.00
3	Install Connector Pipe Screen (CPS) in Existing County Catch Basin	EA	179	$1,204.00	$215,516.00
4	Los Angeles County Flood Construction Permit Fee	LS	1	$ 161	$ 161

BID SCHEDULE (Continued)

TOTAL CONTRACT BID:

(Figures) $ 243,793.00

(Words) TWO HUNDRED FORTY-THREE THOUSAND, SEVEN HUNDRED NINETY-THREE DOLLARS AND ZERO CENTS

*** In case of error in extension of price into the total price column, the unit price will govern.**

All work required and shown on the construction plans and this specification for which no price or item is listed on this proposal, it shall be understood that such work, equipment, labor, tools and materials shall be provided without extra charge, allowance or direct payment of any kind. Payment for performing such work or furnishing such equipment, labor, tools and materials shall be included in the above lump sum or unit bid prices and no additional compensation will paid therefor.

If the City determines that any of the unit bid prices are significantly unbalanced to the potential detriment of the City, the bid will be replaced as non-responsive.

In case of any discrepancy between the words and the figures, the words shall prevail. If the unit price and the total amount for any item are not in agreement, the unit price alone shall be considered to represent the bidder's intention and all totals will be corrected to conform thereto.

Attached hereto is cash, a certified check, a cashier's check, or a bidder's bond in the amount of Ten Percent of the Amount Bid Dollars, said amount being not less than 10 percent of the amount bid. Pursuant to Public Contract Code Sections 20172 and 20174, it is agreed a portion equal to the difference between the low bid and second low bid shall be retained as a bid bond forfeiture by the City if the undersigned fails or refuses to execute the Contract and furnish the required bonds and certificates of insurance within the time provided.

United Storm Water, Inc.
Name of Bidder

Lydia Perry
Signature of Bidder Lydia Perry, Secretary/Treasurer

BID PROPOSAL

PROJECT NO. JN 998 & 999

ACKNOWLEDGEMENT OF ADDENDA RECEIVED

The Bidder shall acknowledge the receipt of addenda by number and date each addendum received.

Addendum No. 1 Date 10/31/2023 Addendum No. ____ Date _____

Addendum No. ____ Date _____ Addendum No. ____ Date _____

Addendum No. ____ Date _____ Addendum No. ____ Date _____

Addenda will be issued only through the ARC Document Solutions and access under their Public Planroom (www.crplanwell.com). It is the Bidder's sole responsibility to visit the Planroom to obtain and administer any Addendum related to this bid. **An Addendum must be acknowledged above by a bidder in its submitted form of Proposal.**

If an addendum or addenda have been issued by the City and not noted above as being received by the Bidder, the Bid Proposal may be rejected.

Lydia Perry

Bidder's Signature Lydia Perry, Secretary/Treasurer

11/06/2023

Date

BID PROPOSAL

PROJECT NO. JN 998 & 999

BIDDER'S DECLARATION

It is understood and agreed that:

1. The undersigned has carefully examined all documents which will form a part of the Contract; namely, the Notice Inviting Bids, the Instructions to Bidders, this Proposal, the Bid Bond, the Contract, the Faithful Performance Bond, the Payment Bond, the federal requirements, if any, the Plans and Specifications, the Special Provisions, and the Technical Provisions.

2. The undersigned has, by investigation at the site of the work and otherwise, satisfied himself as to the nature and location of the work and fully informed himself as to all conditions and matters, which can in any way affect the work or the cost thereof.

3. The undersigned fully understands the scope of work and has checked carefully all words and figures inserted in this Proposal and he further understands that the City will not be responsible for any errors or omissions in the preparation of the Proposal.

4. The undersigned agrees and acknowledges that he is aware of the provisions of Section 3700 of the Labor Code which requires every employer to be insured against liability for workers' compensation or to undertake self-insurance in accordance with the provisions of that Code, and that the undersigned will comply with such provisions before commencing the performance of the Contract if it is awarded to the undersigned.

The undersigned will execute the Contract and furnish the required statutory bonds and certificates of insurance within the period of time specified in the Contract Documents.

The undersigned will begin work after award of Contract and a Notice to Proceed has been given as herein specified and will complete said work within the time specified in the Bidding Schedule.

5. The undersigned certifies that this Proposal is genuine and not sham or collusive, or made in the interest or on behalf of a person not herein named, and the undersigned has not directly or indirectly induced or solicited any other bidder to put in a sham bid nor induced any other person, firm, or corporation to refrain from bidding. The undersigned has not in any manner sought by collusion to secure for himself any advantage over any other bidder.

6. The undersigned will accept an award and enter into a Contract for all work scheduled herein on which he puts in a bid. The awards for such work are to be entirely at the discretion of the City after evaluation of the bids as submitted. The undersigned agrees that the City shall recover or retain as a bid bond forfeiture an amount equal to the difference between the low bid and amount of the bid of the bidder with whom the City enters into a Contract, and the surplus, if any, shall be returned to the lowest bidder in accordance with the provisions of the Public Contract Code Sections 20172 and 20174 in the event of his failure to execute a Contract and furnish required bonds and insurance therefor within the time provided.

BIDDER'S DECLARATION (Continued)

7. The undersigned bidder stated under penalty of perjury that the representations made in submitting this bid are, to the best of his/her knowledge, true, accurate, and complete.

Respectfully submitted,

United Storm Water, Inc.	Lydia Perry
Contractor's Business Name	Contractor (Print) Title
14000 E. Valley Blvd.	Lydia Perry Secretary/Treasurer
Business Address: Street	Signature Title
Industry CA 91746-2801	768583 (A, HAZ, C21, C31, C42, C27)
City State Zip	Contractor's License No. and Classification
(626) 961-9326	(626) 434-6285
Business Phone Number	Business Fax Number
11/06/2023	
Date	
Lydia Perry Secretary/Treasurer	14000 E. Valley Blvd.
Name Title	Residence: Street
Industry CA 91746-2801	(626) 961-9326
City State Zip	Residence Phone Number

Note: If the bid is made by an individual, it must be signed with the full name of the bidder, whose address must be given: if it is made by a firm, it must be signed in the co-partnership's name by a general partner thereof, who shall also sign his or her own name, and the name and full address of each partner (general and/or limited) must be given; and if it is made by a corporation, it must be signed by a properly authorized officer, the corporate name shall be set forth, and the corporate seal shall be affixed.

BID PROPOSAL

PROJECT NO. JN 998 & 999

NON-COLLUSION AFFIDAVIT

(To be executed by Bidder and submitted with Bid)

State of California

County of Los Angeles

Lydia Perry being first duly sworn, deposes and says that he or she is Secretary/Treasurer of United Storm Water, Inc. the party making the foregoing bid, that the bid is not made in the interest of, or on the behalf of, any undisclosed person, partnership, company, association, organization, or corporation; that the bid is genuine and not collusive or sham; that the bidder has not directly or indirectly colluded, conspired, connived, or agreed with any bidder or anyone else to put in a sham bid, or that anyone shall refrain from bidding; that the bidder has not in any manner, directly or indirectly, sought by agreement, communication, or conference with anyone to fix the bid price of the bidder or any other bidder, or to fix any overhead, profit, or cost element of that of any other bidder, or to secure any advantage against the public body awarding the contract of anyone interested in the proposed contract; that all statements contained in the bid are true; and, further, that the bidder has not, directly or indirectly, submitted his or her bid price or any breakdown thereof, or the contents thereof, or divulged information or data relative thereto, or paid, and will not pay fee to any corporation, or agent thereof to effectuate a collusive or sham bid.

United Storm Water, Inc.
NAME OF BIDDER

Lydia Perry
SIGNATURE OF BIDDER Lydia Perry. Secretary/Treasurer

14000 E. Valley Blvd.
ADDRESS OF BIDDER

Industry	CA	91746-2801
CITY	STATE	ZIP

ALL SIGNATURES MUST BE WITNESSED BY NOTARY
(attach appropriate jurats)

ACKNOWLEDGMENT

A notary public or other officer completing this certificate verifies only the identity of the individual who signed the document to which this certificate is attached, and not the truthfulness, accuracy, or validity of that document.

State of California
County of Los Angeles)

On November 7th, 2023 before me, Lillian Valdivieso, Notary Public
(insert name and title of the officer)

personally appeared Lydia Perry,
who proved to me on the basis of satisfactory evidence to be the person(s) whose name(s) is/~~are~~ subscribed to the within instrument and acknowledged to me that ~~he~~/she/~~they~~ executed the same in ~~his~~/her/~~their~~ authorized capacity(~~ies~~), and that by ~~his~~/her/~~their~~ signature(s) on the instrument the person(s), or the entity upon behalf of which the person(s) acted, executed the instrument.

I certify under PENALTY OF PERJURY under the laws of the State of California that the foregoing paragraph is true and correct.

WITNESS my hand and official seal.

Signature Lillian Valdivieso (Seal)

LILLIAN VALDIVIESO
Notary Public - California
Los Angeles County
Commission # 2329332
My Comm. Expires May 31, 2024

BID PROPOSAL

PROJECT NO. JN 998 & 999

DECLARATION OF ELIGIBILITY TO CONTRACT

[Labor Code Section 1777.1; Public Contract Code Section 6109]

The undersigned, a duly authorized representative of the contractor, certifies and declares that:

1. The undersigned contractor is aware of Sections 1777.1 and 1777.7 of the California Labor Code, which prohibit a contractor or subcontractor who has been found by the Labor Commissioner or the Director of Industrial Relations to be in violation of certain provisions of the Labor Code, from bidding on, being awarded, or performing work as a subcontractor on a public works project for specified periods of time.

2. The undersigned contractor is not ineligible to bid on, be awarded or perform work as a subcontractor on a public works project by virtue of Sections 1771.1 or 1777.7 of the California Labor Code or any other provision of law.

3. The undersigned contractor is aware of California Public Contract Code Section 6109, which states:

> "(a) A public entity, as defined in Section 1100 [of the Public Contract Code], may not permit a contractor or subcontractor who is ineligible to bid or work on, or be awarded, a public works project pursuant to Section 1777.1 or 1777.7 of the Labor Code to bid on, be awarded, or perform work as a subcontractor on, a public works project. Every public works project shall contain a provision prohibiting a contractor from performing work on a public works project with a subcontractor who is ineligible to perform work on the public works project pursuant to Section 1771.1 or 1777.7 of the Labor Code."
>
> "(b) Any contract on a public works project entered into between a contractor and a debarred subcontractor is void as a matter of law. A debarred subcontractor may not receive any public money for performing work as a subcontractor on a public works contract, and any public money that may have been paid to a debarred subcontractor by a contractor on the project shall be returned to the awarding body. The contractor shall be responsible for the payment of wages to workers of a debarred subcontractor who has been allowed to work on the project."

4. The undersigned contractor has investigated the eligibility of each and every subcontractor the undersigned contractor intends to use on this public works project, and has determined that none of them is ineligible to perform work as a subcontractor on a public works project by virtue of the foregoing provisions of the Public Contract Code, Sections 1771.1 or 1777.7 of the Labor Code, or any other provision of law.

I declare under penalty of perjury under the laws of the State of California that the foregoing is true and correct. Executed this 6th day of November, 2023, at Industry _____ *(place of execution)*, California_____.

Signature: Lydia Perry Name: Lydia Perry

Title: Secretary/Treasurer Company: United Storm Water, Inc.

Bond No. CSBA-25382

BID PROPOSAL

PROJECT NO. JN 998 & 999

BID BOND

KNOW ALL MEN BY THESE PRESENTS:

THAT United Storm Water, Inc., as Principal, and Arch Insurance Company, as Surety, are held firmly bound unto the City of Gardena in the sum of $10% ; Ten Percent of the Amount Bid DOLLARS, (not less than ten percent of total amount of bid) for the payment of which sum well and truly to be made, we bind ourselves, our heirs, executors, administrators, successors, and assigns, jointly and severally, firmly by these presents.

WHEREAS, said Principal has submitted a bid to the City to perform all work required under the following:

PROJECT: STORM DRAIN DEBRIS SCREEN FY 2020/2021 & FY 2021/2022,
VARIOUS LOCATIONS
JN 998 & 999

NOW, THEREFORE, if said Principal is awarded a Contract by the City and, within the time and in the manner required in the Specifications for said project, enters into the written form of Contract bound with said Specifications and furnishes the required bonds, one to guarantee faithful performance and the other to guarantee payment for labor and materials, then this obligation shall be null and void, otherwise it shall remain in full force and effect. In the event suit is brought upon this bond by the City and judgment is recovered, said Surety shall pay all costs incurred by the City in such suit, including a reasonable attorneys' fee to be fixed by the court. Surety hereby waives the provisions of California Civil Code §2845.

SIGNED AND SEALED, this* day of November, 2023.

*2nd

United Storm Water, Inc. (SEAL)
Principal

BY: Lydia Perez
Signature

Arch Insurance Company (SEAL)
Surety

BY:
Signature Shaunna Rozelle Ostrom, Attorney-in-Fact

Note: This bond must be dated, all signatures must be notarized, and evidence of the authority of any person signing as attorney–in-fact must be attached.

ACKNOWLEDGMENT

A notary public or other officer completing this certificate verifies only the identity of the individual who signed the document to which this certificate is attached, and not the truthfulness, accuracy, or validity of that document.

State of California
County of Los Angeles)

On November 7th, 2023 before me, Lillian Valdivieso, Notary Public
(insert name and title of the officer)

personally appeared Lydia Perry,
who proved to me on the basis of satisfactory evidence to be the person(s) whose name(s) is/~~are~~ subscribed to the within instrument and acknowledged to me that ~~he~~/she/~~they~~ executed the same in ~~his~~/her/~~their~~ authorized capacity(~~ies~~), and that by ~~his~~/her/~~their~~ signature(s) on the instrument the person(~~s~~), or the entity upon behalf of which the person(~~s~~) acted, executed the instrument.

I certify under PENALTY OF PERJURY under the laws of the State of California that the foregoing paragraph is true and correct.

WITNESS my hand and official seal.

Signature Lillian Valdivieso (Seal)

LILLIAN VALDIVIESO
Notary Public - California
Los Angeles County
Commission # 2329332
My Comm. Expires May 31, 2024

ACKNOWLEDGMENT

A notary public or other officer completing this certificate verifies only the identity of the individual who signed the document to which this certificate is attached, and not the truthfulness, accuracy, or validity of that document.

State of California
County of Orange)

On 11/02/2023 before me, Melissa Ann Vaccaro, Notary Public
(insert name and title of the officer)

personally appeared Shaunna Rozelle Ostrom,
who proved to me on the basis of satisfactory evidence to be the person(s) whose name(s) is/are subscribed to the within instrument and acknowledged to me that he/she/they executed the same in his/her/their authorized capacity(ies), and that by his/her/their signature(s) on the instrument the person(s), or the entity upon behalf of which the person(s) acted, executed the instrument.

I certify under PENALTY OF PERJURY under the laws of the State of California that the foregoing paragraph is true and correct.

WITNESS my hand and official seal.

MELISSA ANN VACCARO
COMM. #2401942
Notary Public-California
ORANGE COUNTY
My Comm. Expires May 12, 2026

Signature _____ (Seal)
Melissa Ann Vaccaro

This Power of Attorney limits the acts of those named herein, and they have no authority to bind the Company except in the manner and to the extent herein stated. Not valid for Note, Loan, Letter of Credit, Currency Rate, Interest Rate or Residential Value Guarantees.

POWER OF ATTORNEY

Know All Persons By These Presents:
That the Arch Insurance Company, a corporation organized and existing under the laws of the State of Missouri, having its principal administrative office in Jersey City, New Jersey (hereinafter referred to as the "Company") does hereby appoint:

Ben Stong, Michael D. Stong and R. Nappi of Riverside, CA (EACH) Benjamin Wolfe, Chelsea Liberatore of Sacramento, CA (EACH) Adrian Langrell, Arturo Ayala, Daniel Huckabay, Dwight Reilly, Frank Morones and Shaunna Rozelle Ostrom of Orange, CA (EACH)

its true and lawful Attorney(s)in-Fact, to make, execute, seal, and deliver from the date of issuance of this power for and on its behalf as surety, and as its act and deed: Any and all bonds, undertakings, recognizances and other surety obligations, in the penal sum not exceeding One Hundred Fifty Million Dollars ($150,000,000.00). This authority does not permit the same obligation to be split into two or more bonds In order to bring each such bond within the dollar limit of authority as set forth herein.

The execution of such bonds, undertakings, recognizances and other surety obligations in pursuance of these presents shall be as binding upon the said Company as fully and amply to all intents and purposes, as if the same had been duly executed and acknowledged by its regularly elected officers at its principal administrative office in Jersey City, New Jersey.

This Power of Attorney is executed by authority of resolutions adopted by unanimous consent of the Board of Directors of the Company on August 31, 2022, true and accurate copies of which are hereinafter set forth and are hereby certified to by the undersigned Secretary as being in full force and effect:
"**VOTED**, That the Chairman of the Board, the President, or the Executive Vice President, or any Senior Vice President, of the Surety Business Division, or their appointees designated in writing and filed with the Secretary, or the Secretary shall have the power and authority to appoint agents and attorneys-in-fact, and to authorize them subject to the limitations set forth in their respective powers of attorney, to execute on behalf of the Company, and attach the seal of the Company thereto, bonds, undertakings, recognizances and other surety obligations obligatory in the nature thereof, and any such officers of the Company may appoint agents for acceptance of process."

This Power of Attorney is signed, sealed and certified by facsimile under and by authority of the following resolution adopted by the unanimous consent of the Board of Directors of the Company on August 31, 2022:

VOTED, That the signature of the Chairman of the Board, the President, or the Executive Vice President, or any Senior Vice President, of the Surety Business Division, or their appointees designated in writing and filed with the Secretary, and the signature of the Secretary, the seal of the Company, and certifications by the Secretary, may be affixed by facsimile on any power of attorney or bond executed pursuant to the resolution adopted by the Board of Directors on August 31, 2022, and any such power so executed, sealed and certified with respect to any bond or undertaking to which it is attached, shall continue to be valid and binding upon the Company. **In Testimony Whereof**, the Company has caused this instrument to be signed and its corporate seal to be affixed by their authorized officers, this **10th day of February, 2023**.

Attested and Certified

Regan A. Shulman, Secretary

Arch Insurance Company
CORPORATE SEAL 1971 Missouri

Arch Insurance Company

Stephen C. Ruschak, Executive Vice President

STATE OF PENNSYLVANIA SS
COUNTY OF PHILADELPHIA SS

I, **Michele Tripodi**, a Notary Public, do hereby certify that Regan A. Shulman and Stephen C. Ruschak personally known to me to be the same persons whose names are respectively as Secretary and Executive Vice President of the Arch Insurance Company, a Corporation organized and existing under the laws of the State of Missouri, subscribed to the foregoing instrument, appeared before me this day in person and severally acknowledged that they being thereunto duly authorized signed, sealed with the corporate seal and delivered the said instrument as the free and voluntary act of said corporation and as their own free and voluntary acts for the uses and purposes therein set forth.

Commonwealth of Pennsylvania - Notary Seal
MICHELE TRIPODI, Notary Public
Philadelphia County
My Commission Expires July 31, 2025
Commission Number 1168622

Michele Tripodi, Notary Public
My commission expires 07/31/2025

CERTIFICATION

I, **Regan A. Shulman**, Secretary of the Arch Insurance Company, do hereby certify that the attached **Power of Attorney dated February 10, 2023** on behalf of the person(s) as listed above is a true and correct copy and that the same has been in full force and effect since the date thereof and is in full force and effect on the date of this certificate; and I do further certify that the said Stephen C. Ruschak, who executed the Power of Attorney as Executive Vice President, was on the date of execution of the attached Power of Attorney the duly elected Executive Vice President of the Arch Insurance Company.

IN TESTIMONY WHEREOF, I have hereunto subscribed my name and affixed the corporate seal of the Arch Insurance Company on this 2nd **day of** November, 2023

Regan A. Shulman, Secretary

This Power of Attorney limits the acts of those named therein to the bonds and undertakings specifically named therein and they have no authority to bind the Company except in the manner and to the extent herein stated.

PLEASE SEND ALL CLAIM INQUIRIES RELATING TO THIS BOND TO THE FOLLOWING ADDRESS:
Arch Insurance – Surety Division
3 Parkway, Suite 1500
Philadelphia, PA 19102

Arch Insurance Company
CORPORATE SEAL 1971 Missouri

***To verify the authenticity of this Power of Attorney, please contact Arch Insurance Company at* SuretyAuthentic@archinsurance.com**
Please refer to the above named Attorney-in-Fact and the details of the bond to which the power is attached.

BID PROPOSAL

PROJECT NO. JN 998 & 999

DESIGNATION OF SUBCONTRACTORS

In compliance with the "Subletting and Subcontracting Fair Practices Act" being Sections 4100-4113 of the Public Contract Code of the State of California, and any amendments thereto, each bidder shall set forth below the name and location of the place of business of each subcontractor who will perform work or labor or render service to the prime contractor in or about the construction of the work or improvement in an amount in excess of one-half (1/2) of one percent (1%) of the prime contractor's total bid, and shall further set forth the portion of the work which will be done by each subcontractor. Only one subcontractor for each such portion shall be listed.

If the contractor fails to specify a subcontractor for any portion of the work to be performed under the contract, he shall be deemed to have agreed to perform such portion himself, and he shall not be permitted to subcontract that portion of the work except under the conditions hereinafter set forth.

Subletting or subcontracting of any portion of the work to which subcontractor was designated in the original bid shall only be permitted in cases of public emergency or necessity, and then only after a finding reduced to writing as a public record of the legislative body of the City.

Portion of Work %	Subcontractor's Name & Address	Type of Work	State License Number	Class	D.I.R. Number
2%	United Pumping Service, Inc. 14000 E. Valley Blvd., Industry, CA 91746-2801	Transportation and Disposal	617639	A, HAZ, C21, C31, C42, ASB	1000006212

Not more than 5 %.

TO BE SUBMITTED WITH PROPOSAL

BID PROPOSAL

PROJECT NO. JN 998 & 999

CONSTRUCTION PROJECT REFERENCE

In order to more fully evaluate your background and experience for the project herein proposed, please submit a list of Public Works and/or similar construction projects completed or in progress within the last three (3) years. Failure to provide this information may constitute grounds for rejection of your bid as non-responsive.

Number of years as a contractor in construction work of this type: 24 years

Three projects of this type recently completed:

1. Name (Firm/Agency): City of Inglewood
   Address: 1 West Manchester Blvd., Inglewood, CA 90301
   Contact Person: Thomas Lee Telephone No.: (310) 412-5611
   Title of Project: FY 2021-22 Storm Drain Catch Basin Inserts in the City of Inglewood (Bid No. CB-22-04)
   Project Location: Various locations throughout the City of Inglewood
   Date of Completion: November 2023 Contract Amount: $401,178.50

2. Name (Firm/Agency): City of Hawthorne
   Address: 4455 W. 126th Street, Hawthorne, CA 90250
   Contact Person: Heecheol Kwon Telephone No.: (310) 349-2984
   Title of Project: Screen Inlet Improvement Phase 2; Project #20-07
   Project Location: Various locations throughout the City of Hawthorne
   Date of Completion: May 2022 Contract Amount: $374,432

3. Name (Firm/Agency): City of Santa Clarita
   Address: 23920 Valencia Blvd., Santa Clarita, CA 91355
   Contact Person: Lisa Campos Telephone No.: (661) 857-2066
   Title of Project: Trash Excluders Project FY 21-22; City Project No. R0029
   Project Location: Various locations throughout the City of Santa Clarita
   Date of Completion: February 2023 Contract Amount: $108,380

NOTE: If requested by the City, the bidder shall furnish a certified financial statement, references, and other information sufficiently comprehensive to permit an appraisal of his current financial condition.

Bidder's Signature Lydia Perry
Lydia Perry, Secretary/Treasurer

TO BE SUBMITTED WITH PROPOSAL

BID PROPOSAL

PROJECT NO. JN 998 & 999

CERTIFICATE OF NON-DISCRIMINATION BY CONTRACTORS

As suppliers of goods or services to the City, the firm listed below certifies that it does not discriminate in its employment with regard to race, color, religion, sex, or national origin; that it is in compliance with all applicable federal, state, and local directives, and executive orders regarding non-discrimination in employment; and that it agrees to pursue positively and aggressively the principle of equal opportunity in employment.

We agree specifically:

1. To establish or observe employment policies which affirmatively promote opportunities for minority persons at all job levels.

2. To communicate this policy to all persons concerned, including all company employees, outside recruiting services, especially those serving minority communities, and to the minority communities at large.

3. To take affirmative steps to hire minority employees within the company.

FIRM United Storm Water, Inc.

TITLE OF PERSON SIGNING Lydia Perry, Secretary/Treasurer

SIGNATURE Lydia Perry

DATE 11/06/2023

Please include any additional information available regarding equal opportunity employment programs now in effect within your company:

No additional information

BID PROPOSAL

PROJECT NO. JN 998 & 999

CERTIFICATION REGARDING DEBARMENT, SUSPENSION, INELIGIBILITY AND VOLUNTARY EXCLUSION – PRIMARY COVERED TRANSACTIONS

(BEFORE COMPLETING CERTIFICATION, READ INSTRUCTIONS ON NEXT PAGE)

The Contractor shall not perform Work with any Subcontractor that has been debarred or suspended pursuant to California Labor Code Section 1777.1 or any other federal or State law providing for the debarment of contractors from public works. The Contractor and Subcontractors shall not be debarred or suspended throughout the duration of the Contract pursuant to Labor Code Section 1777.1 or any other federal or State law providing for the debarment of contractors from public works. If the Contractor or any Subcontractor becomes debarred or suspended during the duration of the Project, the Contractor shall immediately notify the City.

1. The prospective primary participant certifies to the best of its knowledge and belief, that it and its principals:

    a. Are not presently debarred, suspended, proposed for debarment, declared ineligible, or voluntarily excluded from covered transactions by any Federal department or agency;

    b. Have not within a 5-year period preceding this proposal been convicted of or had a civil judgment rendered against them for commission of fraud or a criminal offense in connection with obtaining, attempting to obtain, or performing a public (Federal, State or local) transaction or contract under a public transaction; violation of Federal or State antitrust statutes or commission of embezzlement, theft, forgery, bribery, falsification or destruction of records, making false statement, or receiving stolen property;

    c. Are not presently indicted for or otherwise criminally or civilly charged by a governmental entity (Federal, State or local) with commission of any of the offenses enumerated in paragraph 1b of this certification; and

    d. Have not within a 5-year period preceding this application/proposal had one or more public transactions (Federal, State or local) terminated for cause or default.

2. Where the prospective primary participant is unable to certify to any of the statements in this certification, such prospective participant shall attach an explanation to this proposal.

Signature: Lydia Perry Name: Lydia Perry

Title: Secretary/Treasurer Company: United Storm Water, Inc.

CERTIFICATION REGARDING DEBARMENT, SUSPENSION, INELIGIBILITY AND VOLUNTARY EXCLUSION – PRIMARY COVERED TRANSACTIONS (Continued)

INSTRUCTIONS FOR CERTIFICATION

1. By signing and submitting this proposal, the prospective primary participant is providing the certification set out below.
2. The inability of a person to provide the certification required below will not necessarily result in denial of participation in this covered transaction. The prospective participant shall submit an explanation of why it cannot provide the certification set out below. The certification or explanation will be considered in connection with the department or agency's determination whether to enter into this transaction. However, failure of the prospective primary participant to furnish a certification or an explanation shall disqualify such person from participation in this transaction.
3. The certification in this clause is a material representation of fact upon which reliance was placed when the department or agency determined to enter into this transaction. If it is later determined that the prospective primary participant knowingly rendered an erroneous certification, in addition to other remedies available to the Federal Government, the department or agency may terminate this transaction for cause or default.
4. The prospective primary participant shall provide immediate written notice to the department or agency to which this proposal is submitted if at any time the prospective primary participant learns that its certification was erroneous when submitted or has become erroneous by reason of changed circumstances.
5. The terms "covered transaction," "debarred," "suspended," "ineligible," "lower tier covered transaction," "participant," "person," "primary covered transaction," "principal," "proposal," and "voluntarily excluded," as used in this clause, have the meanings set out in the Definitions and Coverage sections of the rules implementing Executive Order 12549. You may contact the department or agency to which this proposal is submitted for assistance in obtaining a copy of those regulations (13 CFR Part 145).
6. The prospective primary participant agrees by submitting this proposal that, should the proposed covered transaction be entered into, it shall not knowingly enter into any lower tier covered transaction with a person who is debarred, suspended, declared ineligible, or voluntarily excluded from participation in this covered transaction, unless authorized by the department or agency entering into this transaction.
7. The prospective primary participant further agrees by submitting this proposal that it will include the clause titled "Certification Regarding Debarment, Suspension, Ineligibility and Voluntary Exclusion--Lower Tier Covered Transactions," provided by the department or agency entering into this covered transaction, without modification, in all lower tier covered transactions and in all solicitations for lower tier covered transactions.
8. A participant in a covered transaction may rely upon a certification of a prospective participant in a lower tier covered transaction that it is not debarred, suspended, ineligible, or voluntarily excluded from the covered transaction, unless it knows that the certification is erroneous. A participant may decide the method and frequency by which it determines the ineligibility of its principals. Each participant may, but is not required to, check the Nonprocurement List.
9. Nothing contained in the foregoing shall be construed to require establishment of a system of records in order to render in good faith the certification required by this clause. The knowledge and information of a participant is not required to exceed that which is normally possessed by a prudent person in the ordinary course of business dealings.
10. Except for transactions authorized under paragraph 6 of these instructions, if a participant in a covered transaction knowingly enters into a lower tier covered transaction with a person who is suspended, debarred, ineligible, or voluntarily excluded from participation in this transaction, in addition to other remedies available to the Federal Government, the department or agency may terminate this transaction for cause or default.

DEPARTMENT of PUBLIC WORKS
1717 WEST 162nd STREET / GARDENA, CALIFORNIA 90247-3731 / WWW.CITYOFGARDENA.ORG / PHONE (310) 217-9568

Oct. 31, 2023

Storm Drain Debris Screen FY 20/21 and FY 21/22 (JN 998/999)

ADDENDUM NO. 1

TO: ALL SPECIFICATION HOLDERS

ADDENDUM NO. 1, AS DECRIBED BELOW, IS FOR USE OF CONTRACTORS AND SUBCONTRACTORS SUBMITTING BIDS ON THIS PROJECT. ALL BIDDERS SHALL INDICATE ON THE BID PROPOSAL FORM, "ACKNOWLEDGEMENT OF ADDENDA RECEIVED", THAT THEY HAVE RECEIVED THIS ADDENDUM NO. 1.

REVISIONS TO CONTRACT DOCUMENTS AND SPECIFICATIONS:

1. **Notice Inviting Bids, the Bid Schedule (BP-2), and the General Provisions (Section 6-1.2 Commencement of the Work):**

   The contract time of completion shall be revised to **35 working days**, excluding the period of material procurement. The contractor is required to order the materials within 21 calendar days after the City Council awards the contract and must submit a copy of the order receipt to the Engineer. The Notice to Proceed shall be issued only after all materials and LA County Public Works permit have been secured.

END OF ADDENDUM NO. 1

TASHA CERDA, Mayor / MARK E. HENDERSON, Mayor Pro Tem
RODNEY G. TANAKA, Councilmember / PAULETTE C. FRANCIS, Councilmember / WANDA LOVE, Councilmember
MINA SEMENZA, City Clerk / GUY MATO, City Treasurer / CLINT OSORIO, City Manager / CARMEN VASQUEZ, City Attorney

UNITED STORM WATER, Inc.
Protecting Our Water Resources

14000 E. VALLEY BLVD
CITY OF INDUSTRY CA 91746
RAMON MENJIVAR
OFFICE (626)961-9326 FAX (626)-434-6994
DIRECT (626)890-7104
Email: ramonm@unitedstormwater.com

CONNECTOR PIPE SCREEN (CPS)
MODEL USW-2M1 FIXED SCREEN WITH SWIVEL ACCESS PLATE

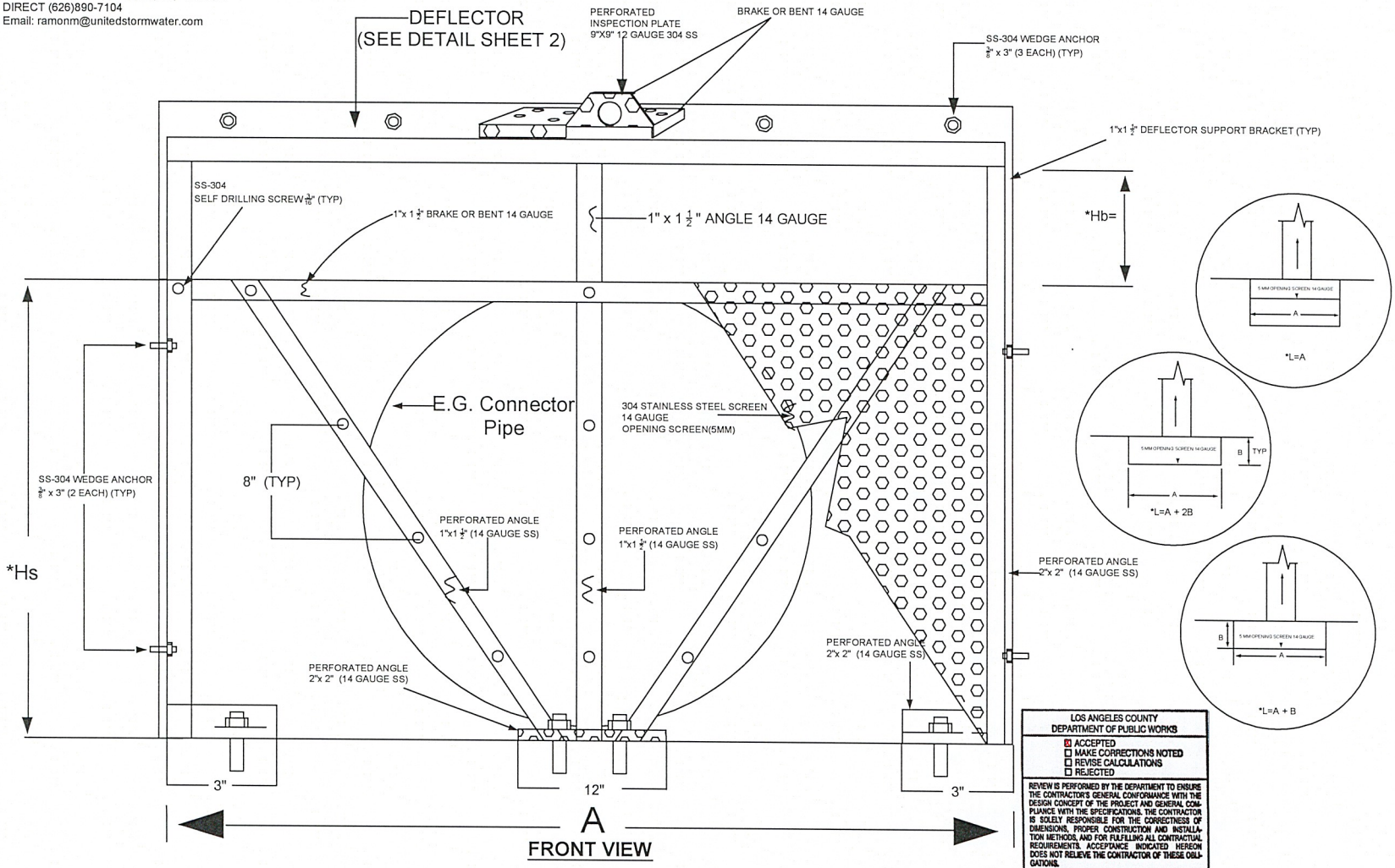

LOS ANGELES COUNTY
DEPARTMENT OF PUBLIC WORKS

- [x] ACCEPTED
- [ ] MAKE CORRECTIONS NOTED
- [ ] REVISE CALCULATIONS
- [ ] REJECTED

REVIEW IS PERFORMED BY THE DEPARTMENT TO ENSURE THE CONTRACTOR'S GENERAL CONFORMANCE WITH THE DESIGN CONCEPT OF THE PROJECT AND GENERAL COMPLIANCE WITH THE SPECIFICATIONS. THE CONTRACTOR IS SOLELY RESPONSIBLE FOR THE CORRECTNESS OF DIMENSIONS, PROPER CONSTRUCTION AND INSTALLATION METHODS, AND FOR FULFILLING ALL CONTRACTUAL REQUIREMENTS. ACCEPTANCE INDICATED HEREON DOES NOT RELIEVE THE CONTRACTOR OF THESE OBLIGATIONS.

BY Steven Dickson DATE 03-01-22

General Notes

*SEE APPENDIX A-1
AND CPS SIZING TABLE 1&2

**INSPECTION COVER CAN BE MOVED TO EITHER SIDE (WITH TOOL) TO ALLOW MOSQUITO VECTOR CONTROL TECHNICIAN TO INSERT TEST MATERIALS

THIS MODEL FOR USE IN SHALLOW CATCH BASINS WHERE CLEARANCE FROM BOTTOM OF TRAFFIC GRATE, OR CATCH BASIN DECK, TO TOP OF DEFLECTOR IS 9" OR LESS. ALLOWS ACCESS FOR MOSQUITO ABATEMENT ACTIVITIES.

No.	Revision/Issue	Date

Firm Name and Address

UNITED STORM WATER, Inc.
14000 E. VALLEY BLVD
CITY OF INDUSTRY CA 91746

Project	Sheet
USW-2M1	1 OF 4
Date: 7/6/2022	
Scale: NOT TO SCALE	

UNITED STORM WATER, Inc.
Protecting Our Water Resources

14000 E. VALLEY BLVD
CITY OF INDUSTRY, CA 91746
RAMON MENJIVAR
OFFICE (626)961-9326 EXT 243
DIRECT (626)890-7104

CONNECTOR PIPE SCREEN (CPS)
MODEL USW-2M1 FIXED SCREEN WITH SWIVEL ACCESS PLATE

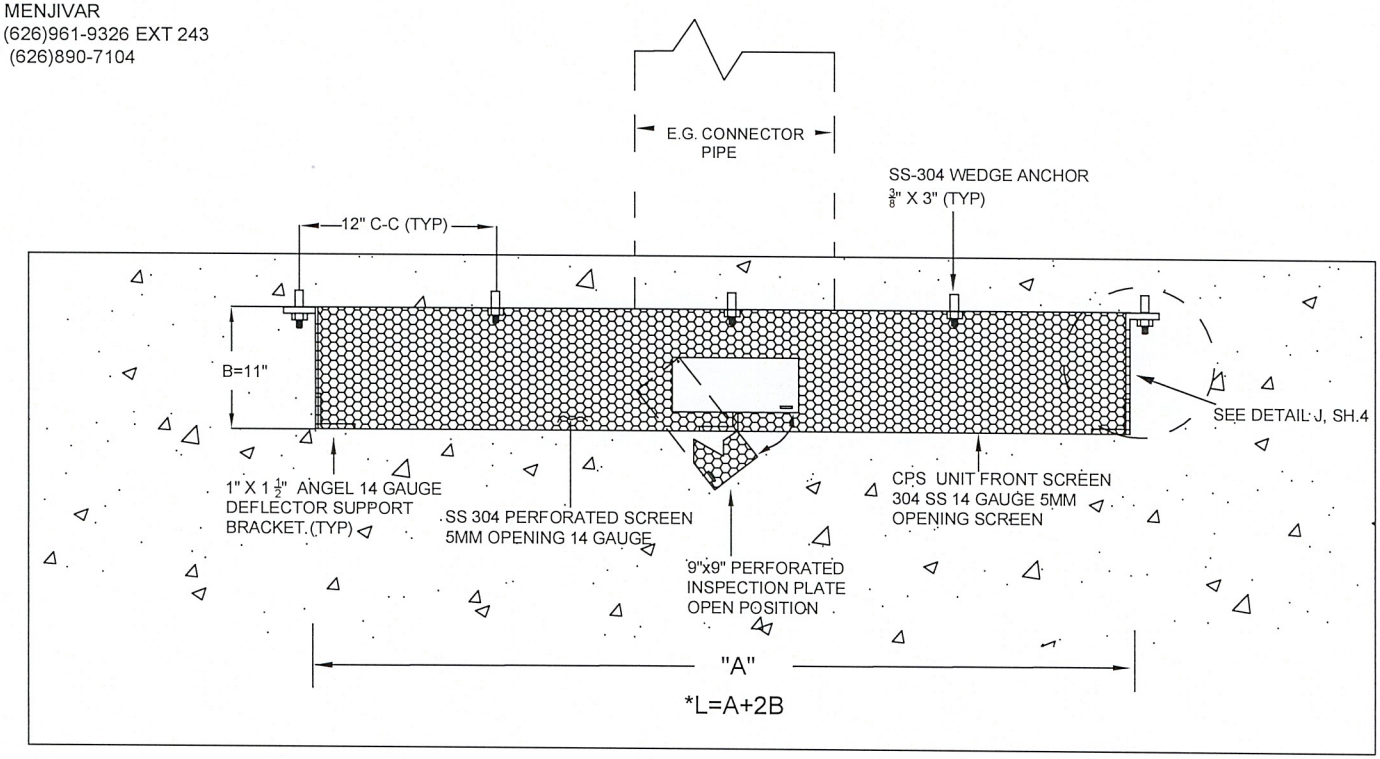

DEFLECTOR DETAIL
PLAIN VIEW (SHEET 1)

LOS ANGELES COUNTY
DEPARTMENT OF PUBLIC WORKS

- [x] ACCEPTED
- [ ] MAKE CORRECTIONS NOTED
- [ ] REVISE CALCULATIONS
- [ ] REJECTED

REVIEW IS PERFORMED BY THE DEPARTMENT TO ENSURE THE CONTRACTOR'S GENERAL CONFORMANCE WITH THE DESIGN CONCEPT OF THE PROJECT AND GENERAL COMPLIANCE WITH THE SPECIFICATIONS. THE CONTRACTOR IS SOLELY RESPONSIBLE FOR THE CORRECTNESS OF DIMENSIONS, PROPER CONSTRUCTION AND INSTALLATION METHODS, AND FOR FULFILLING ALL CONTRACTUAL REQUIREMENTS. ACCEPTANCE INDICATED HEREON DOES NOT RELIEVE THE CONTRACTOR OF THESE OBLIGATIONS.

BY Steven Dickson DATE 03-01-22

General Notes

* SEE APPENDIX A-1 AND CPS SIZING TABLES 1 &2

** INSPECTION COVER CAN BE MOVED TO EITHER SIDE (WITH TOOL) TO ALLOW MOSQUITO VECTOR CONTROL TECHNICIAN TO INSERT TEST MATERIAL.

No.	Revision/Issue	Date

Firm Name and Address
UNITED STORM WATER, Inc.
14000 E. VALLEY BLVD
CITY OF INDUSTRY CA 91746

Project Name and Address

Project: USW- 2M1
Date: 7/6/2022
Scale: NOT TO SCALE
Sheet: 2 OF 4

UNITED STORM WATER, Inc.
Protecting Our Water Resources

14000 E. VALLEY BLVD
CITY OF INDUSTRY, CA 91746
RAMON MENJIVAR
OFFICE (626)961-9326 EXT 243 FAX (626)434-6994
DIRECT (626)890-7104
EMAIL:ramonm@unitedstormwater.com

CONNECTOR PIPE SCREEN (CPS)
MODEL USW-2M1 FIXED SCREEN WITH SWIVEL ACCESS PLATE

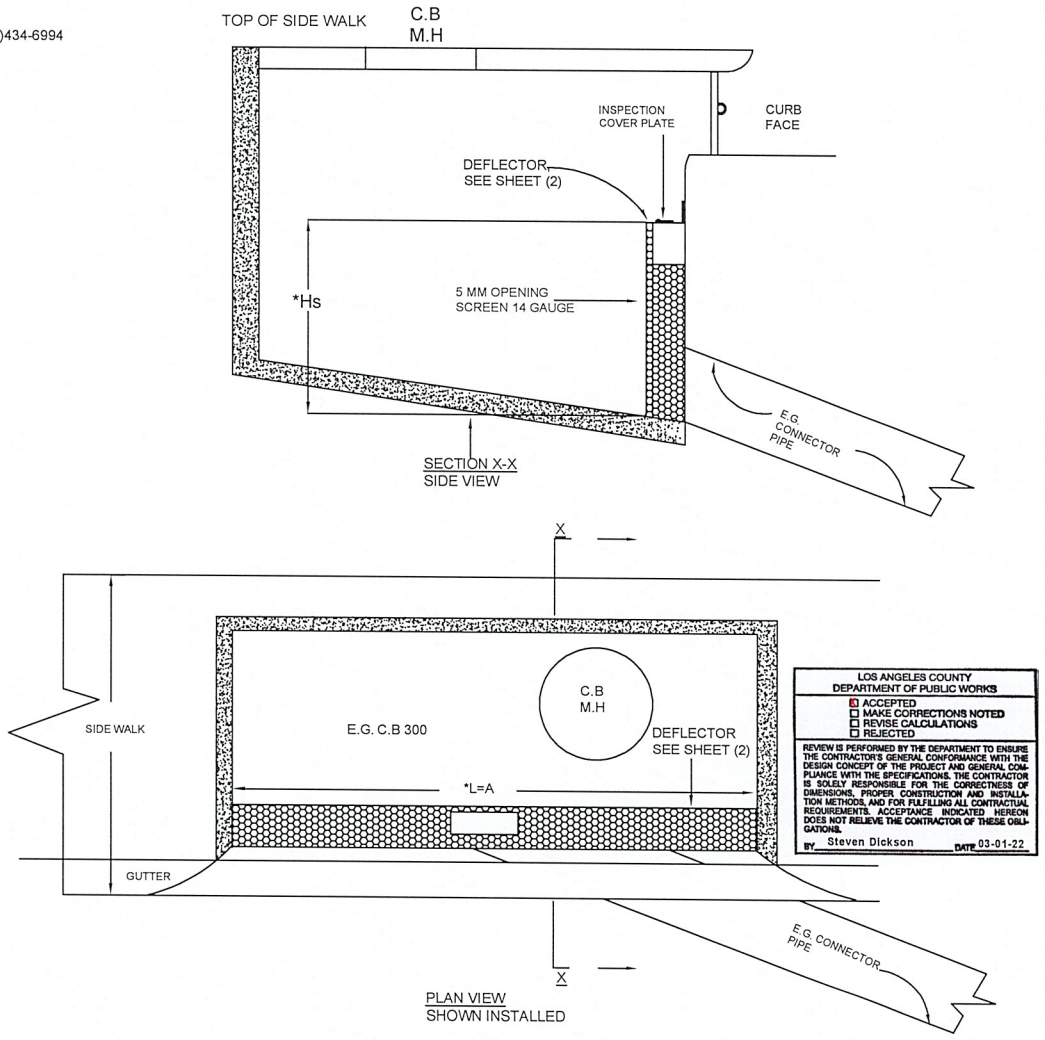

LOS ANGELES COUNTY
DEPARTMENT OF PUBLIC WORKS

- ☒ ACCEPTED
- ☐ MAKE CORRECTIONS NOTED
- ☐ REVISE CALCULATIONS
- ☐ REJECTED

REVIEW IS PERFORMED BY THE DEPARTMENT TO ENSURE THE CONTRACTOR'S GENERAL CONFORMANCE WITH THE DESIGN CONCEPT OF THE PROJECT AND GENERAL COMPLIANCE WITH THE SPECIFICATIONS. THE CONTRACTOR IS SOLELY RESPONSIBLE FOR THE CORRECTNESS OF DIMENSIONS, PROPER CONSTRUCTION AND INSTALLATION METHODS, AND FOR FULFILLING ALL CONTRACTUAL REQUIREMENTS. ACCEPTANCE INDICATED HEREON DOES NOT RELIEVE THE CONTRACTOR OF THESE OBLIGATIONS.

BY Steven Dickson DATE 03-01-22

General Notes

- * SEE APPENDIX A-1 AND APPENDIX B CPS SIZING TABLE 1 & 2

THIS MODEL FOR USE IN SHALLOW CATCH BASINS WHERE CLEARANCE FROM BOTTOM OF TRAFFIC GRATE, OR CATCH BASIN DECK, TO TOP OF DEFLECTOR IS 9½" OR LESS. ALLOWS ACCESS FOR MOSQUITO ABATEMENT ACTIVITIES.

No.	Revision/Issue	Date

Firm Name and Address

UNITED STORM WATER, Inc.
14000 E. VALLEY BLVD
CITY OF INDUSTRY CA 91746

Project Name and Address

Project	USW-2M1
Date	10/25/2021
Scale	NOT TO SCALE
Sheet	3 OF 4

UNITED STORM WATER, Inc.
Protecting Our Water Resources

CONNECTOR PIPE SCREEN (CPS)
MODEL USW-2M1 FIXED SCREEN WITH SWIVEL ACCESS PLATE

14000 E. VALLEY BLVD
CITY OF INDUSTRY,CA 91746
RAMON MENJIVAR
OFFICE (626)961-9326 EXT 243
DIRECT (626) 890-7104
EMAIL:ramonm@unitedstormwater.com

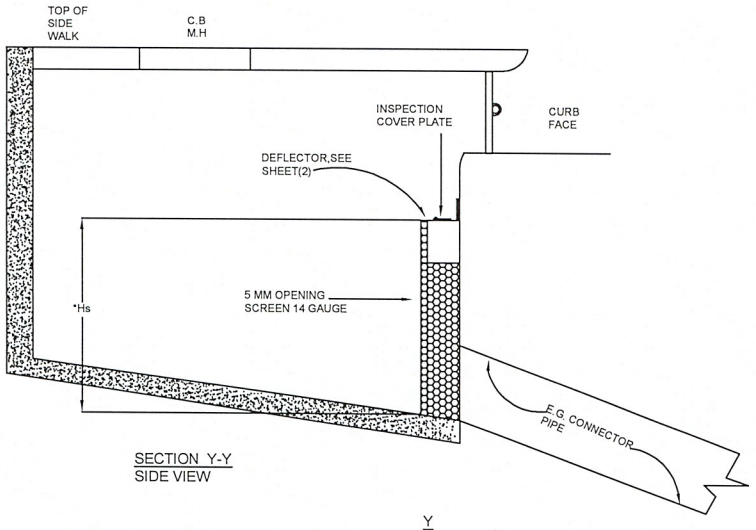

SECTION Y-Y
SIDE VIEW

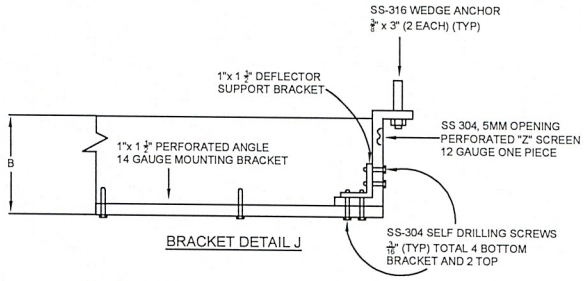

BRACKET DETAIL J

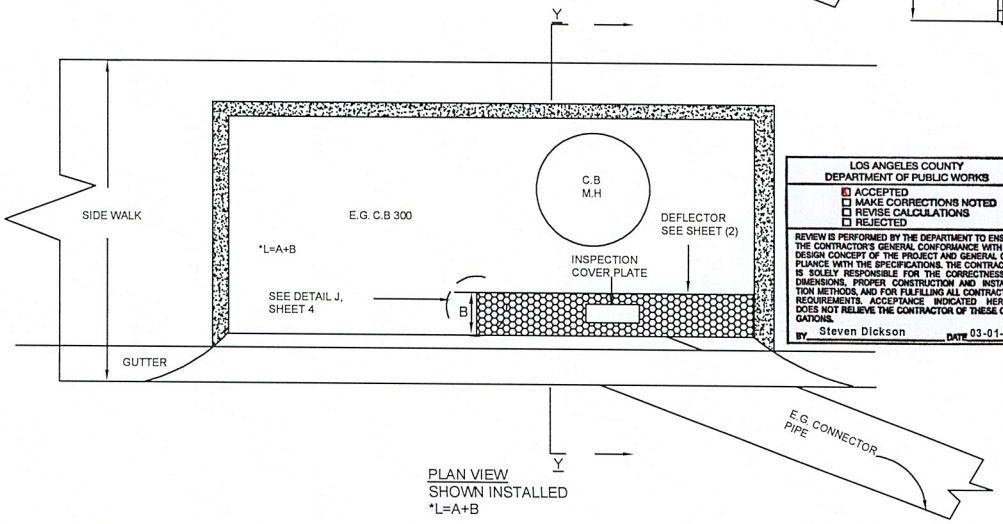

PLAN VIEW
SHOWN INSTALLED
*L=A+B

LOS ANGELES COUNTY
DEPARTMENT OF PUBLIC WORKS
- [x] ACCEPTED
- [ ] MAKE CORRECTIONS NOTED
- [ ] REVISE CALCULATIONS
- [ ] REJECTED

REVIEW IS PERFORMED BY THE DEPARTMENT TO ENSURE THE CONTRACTOR'S GENERAL CONFORMANCE WITH THE DESIGN CONCEPT OF THE PROJECT AND GENERAL COMPLIANCE WITH THE SPECIFICATIONS. THE CONTRACTOR IS SOLELY RESPONSIBLE FOR THE CORRECTNESS OF DIMENSIONS, PROPER CONSTRUCTION AND INSTALLATION METHODS, AND FOR FULFILLING ALL CONTRACTUAL REQUIREMENTS. ACCEPTANCE INDICATED HEREON DOES NOT RELIEVE THE CONTRACTOR OF THESE OBLIGATIONS.

BY Steven Dickson DATE 03-01-22

General Notes

* SEE APPENDIX A-1 AND APPENDIX B CPS SIZING TABLE 1 & 2

THIS MODEL FOR USE IN CATCH BASINS WHERE CLEARANCE FROM BOTTOM OF TRAFFIC GRATE, OR CATCH BASIN DECK, TO TOP OF DEFLECTOR IS 9 3/4" OR LESS. ALLOWS ACCESS FOR MOSQUITO ABATEMENT ACTIVITIES.

No.	Revision/Issue	Date

Firm Name and Address
UNITED STORM WATER, Inc.
Protecting Our Water Resources
14000 E. VALLEY BLVD
CITY OF INDUSTRY CA 91746

Project Name and Address

Project: USW-2M1	Sheet: 4 OF 4
Date: 10/25/2021	
Scale: NOT TO SCALE	

UNITED STORM WATER INC.
Protecting Our Water Resources

14000 E. VALLEY BLVD
CITY OF INDUSTRY, CA 91746
RAMON MENJIVAR
OFFICE (626)961-9326 FAX (626)-434-6994
DIRECT (626)890-7104
Email: ramonm@unitedstormwater.com

CONNECTOR PIPE SCREEN (CPS)
MODEL USW-2M2 FIXED SCREEN WITH HINGED DEFLECTOR ACCESS

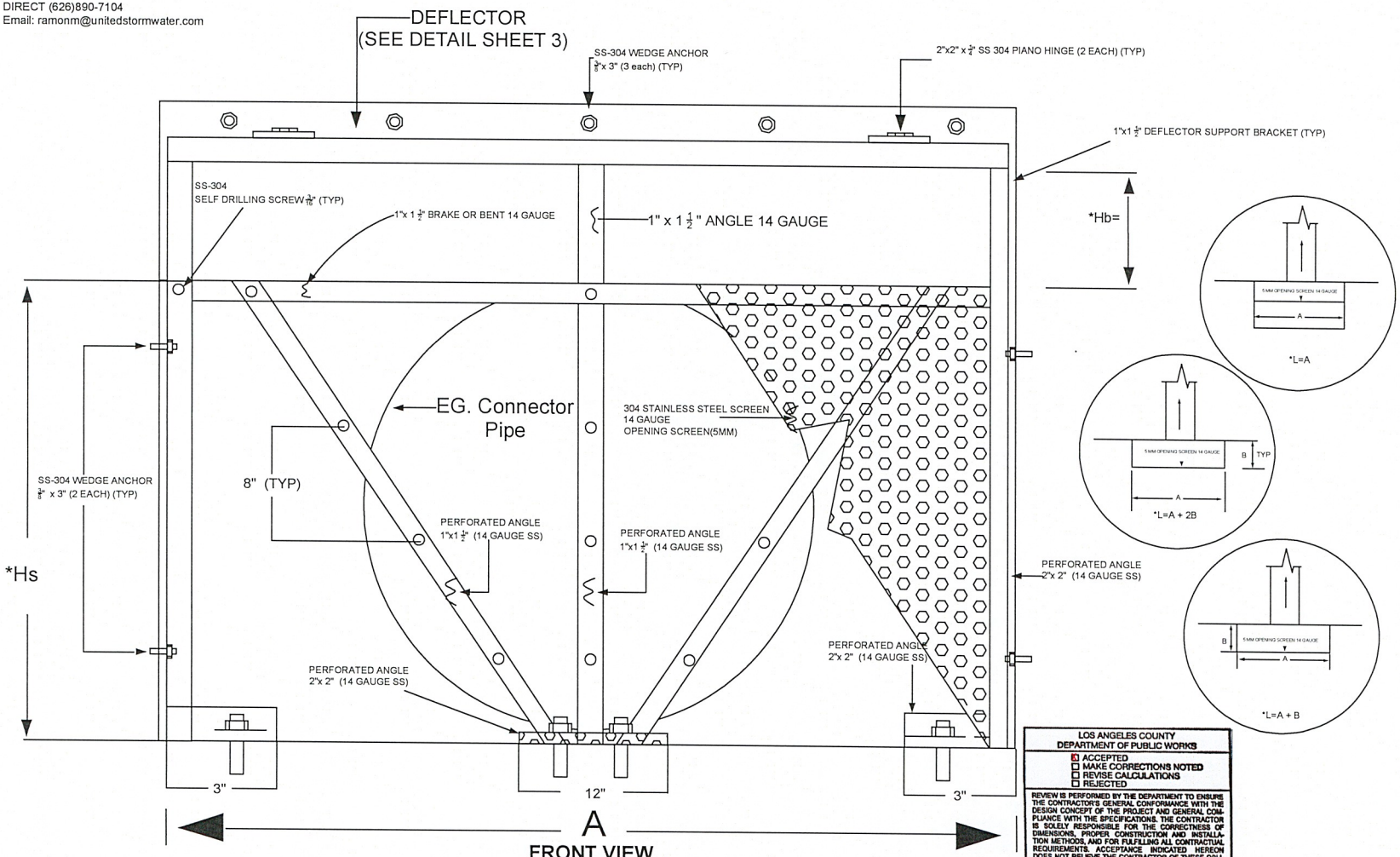

LOS ANGELES COUNTY
DEPARTMENT OF PUBLIC WORKS
☒ ACCEPTED
☐ MAKE CORRECTIONS NOTED
☐ REVISE CALCULATIONS
☐ REJECTED
REVIEW IS PERFORMED BY THE DEPARTMENT TO ENSURE THE CONTRACTOR'S GENERAL CONFORMANCE WITH THE DESIGN CONCEPT OF THE PROJECT AND GENERAL COMPLIANCE WITH THE SPECIFICATIONS. THE CONTRACTOR IS SOLELY RESPONSIBLE FOR THE CORRECTNESS OF DIMENSIONS, PROPER CONSTRUCTION AND INSTALLATION METHODS, AND FOR FULFILLING ALL CONTRACTUAL REQUIREMENTS. ACCEPTANCE INDICATED HEREON DOES NOT RELIEVE THE CONTRACTOR OF THESE OBLIGATIONS.
BY: Steven Dickson DATE: 03-01-22

General Notes

* SEE APPENDIX A-1
AND CPS SIZING TABLE 1&2

THIS MODEL FOR USE IN CATCH BASINS WHERE THERE IS 10" OR MORE CLEARANCE FROM BOTTOM OF TRAFFIC GRATE, OR CATCH BASIN DECK, TO TOP OF DEFLECTOR FOR MOSQUITO ABATEMENT ACTIVITIES.

No.	Revision/Issue	Date

Firm Name and Address
UNITED STORM WATER INC.
14000 E. Valley Blvd
City of Industry CA.91746

Project Name and Address

Project	Sheet
USW-2M2	1 of 5
Date: 10/10/2021	
Scale: NOT TO SCALE	

UNITED STORM WATER, Inc.
Protecting Our Water Resources

14000 E. VALLEY BLVD
CITY OF INDUSTRY, CA 91746
RAMON MENJIVAR
OFFICE (626) 961-9326 FAX (626)434-6994
DIRECT (626) 890-7104
EMAIL: ramonm@unitedstormwater.com

CONNECTOR PIPE SCREEN (CPS)
MODEL USW-2M2 FIXED SCREEN WITH HINGED DEFLECTOR ACCESS

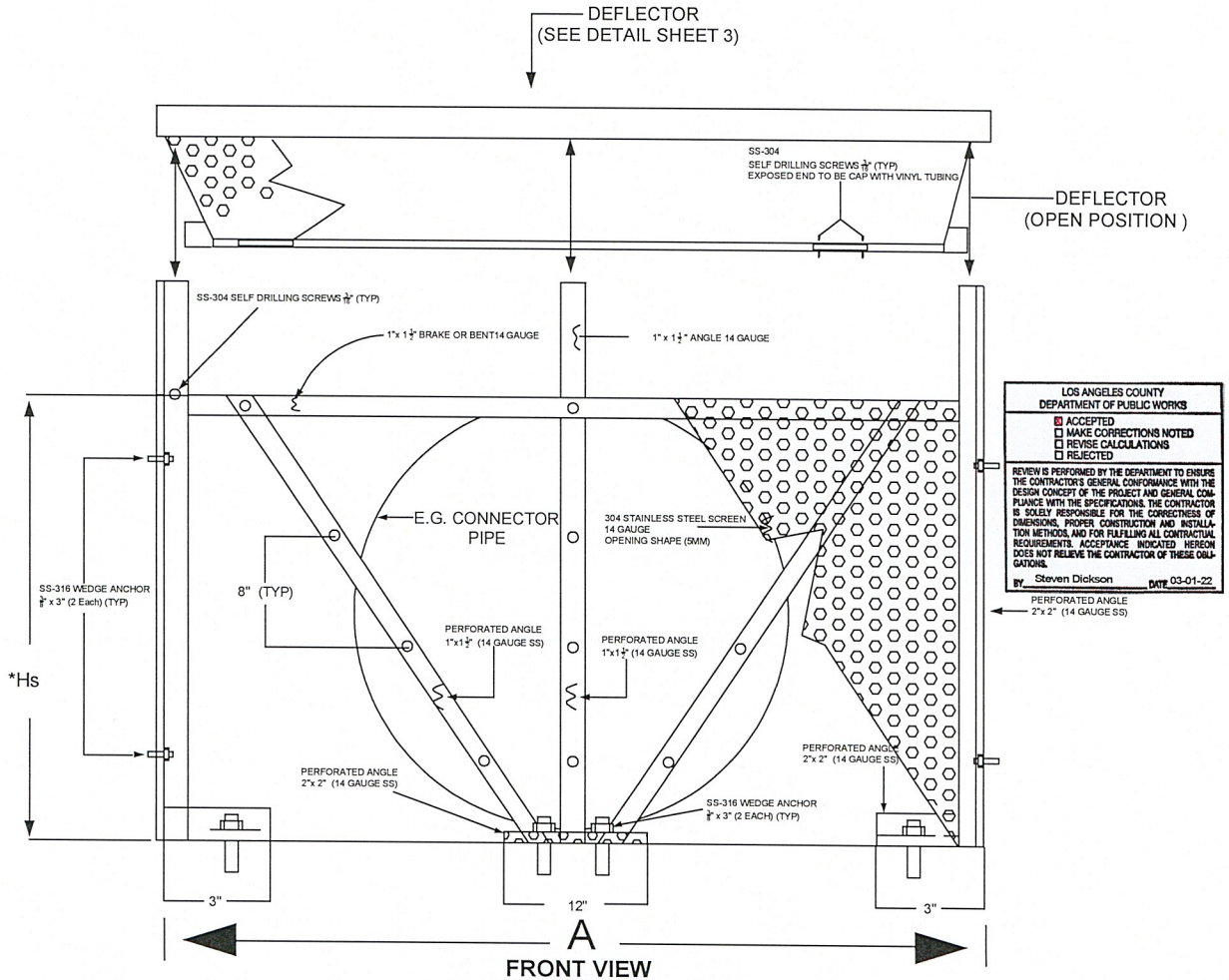

FRONT VIEW
SHOWN WITH DEFLECTOR OPEN

LOS ANGELES COUNTY
DEPARTMENT OF PUBLIC WORKS

- [X] ACCEPTED
- [ ] MAKE CORRECTIONS NOTED
- [ ] REVISE CALCULATIONS
- [ ] REJECTED

REVIEW IS PERFORMED BY THE DEPARTMENT TO ENSURE THE CONTRACTOR'S GENERAL CONFORMANCE WITH THE DESIGN CONCEPT OF THE PROJECT AND GENERAL COMPLIANCE WITH THE SPECIFICATIONS. THE CONTRACTOR IS SOLELY RESPONSIBLE FOR THE CORRECTNESS OF DIMENSIONS, PROPER CONSTRUCTION AND INSTALLATION METHODS, AND FOR FULFILLING ALL CONTRACTUAL REQUIREMENTS. ACCEPTANCE INDICATED HEREON DOES NOT RELIEVE THE CONTRACTOR OF THESE OBLIGATIONS.

BY Steven Dickson DATE 03-01-22

General Notes

* SEE APPENDIX A-1
AND CPS SIZING TABLE 1&2

THIS MODEL FOR USE IN CATCH BASINS WHERE THERE IS 10' OR MORE CLEARANCE FROM BOTTOM OF TRAFFIC GRATE, OR CATCH BASIN DECK, TO TOP OF DEFLECTOR FOR MOSQUITO ABATEMENT ACTIVITIES.

No.	Revision/Issue	Date

Firm Name and Address
UNITED STORM WATER, Inc.
14000 E. VALLEY BLVD
CITY OF INDUSTRY CA.91746

Project Name and Address

Project	Sheet
USW-2M2	2 of 5
Date: 7/7/2022	
Scale: NOT TO SCALE	

UNITED STORM WATER INC.
Protecting Our Water Resources

CONNECTOR PIPE SCREEN (CPS)
MODEL USW-2M2 FIXED SCREEN WITH HINGED DEFLECTOR ACCESS

14000 E. VALLEY BLVD
CITY OF INDUSTRY, CA 91746
RAMON MENJIVAR
OFFICE (626)961-9326 FAX (626)434-6994
DIRECT (626)890-7104
EMAIL: ramonm@unitedstormwater.com

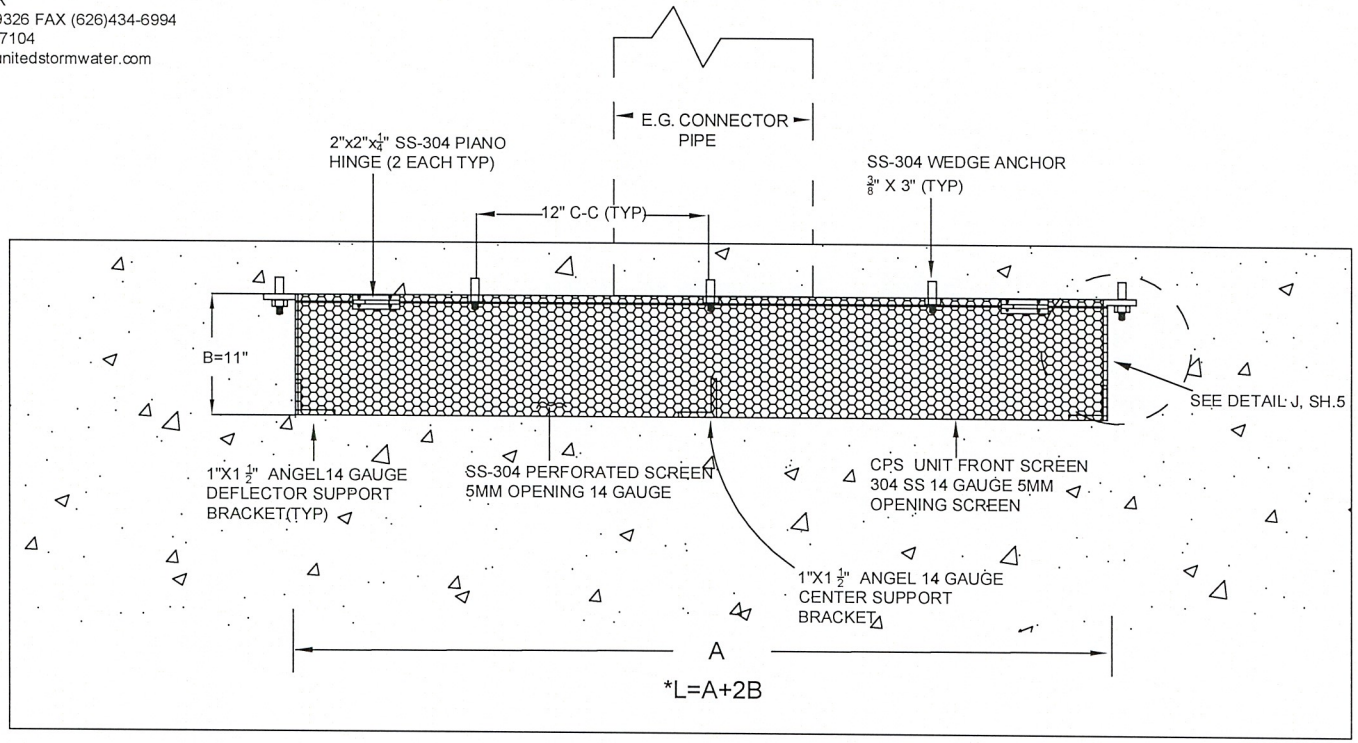

DEFLECTOR DETAIL
PLAN VIEW (SHEET 1)

LOS ANGELES COUNTY
DEPARTMENT OF PUBLIC WORKS

- [x] ACCEPTED
- [ ] MAKE CORRECTIONS NOTED
- [ ] REVISE CALCULATIONS
- [ ] REJECTED

REVIEW IS PERFORMED BY THE DEPARTMENT TO ENSURE THE CONTRACTOR'S GENERAL CONFORMANCE WITH THE DESIGN CONCEPT OF THE PROJECT AND GENERAL COMPLIANCE WITH THE SPECIFICATIONS. THE CONTRACTOR IS SOLELY RESPONSIBLE FOR THE CORRECTNESS OF DIMENSIONS, PROPER CONSTRUCTION AND INSTALLATION METHODS, AND FOR FULFILLING ALL CONTRACTUAL REQUIREMENTS. ACCEPTANCE INDICATED HEREON DOES NOT RELIEVE THE CONTRACTOR OF THESE OBLIGATIONS.

BY Steven Dickson DATE 03-01-22

General Notes

- SEE APPENDIX A-1 AND CPS SIZING TABLE 1 & 2

THIS MODEL FOR USE IN CATCH BASINS WHERE THERE IS 10" OR MORE CLEARANCE FROM BOTTOM OF TRAFFIC GRATE, OR CATCH BASIN DECK, TO TOP OF DEFLECTOR FOR MOSQUITO ABATEMENT ACTIVITIES.

No.	Revision/Issue	Date

Firm Name and Address

UNITED STORM WATER INC.
14000 E. VALLEY BLVD
CITY OF INDUSTRY, CA 91746

Project Name and Address

Project	Sheet
USW-2M2	3 of 5
Date: 10/10/2021	
Scale: NOT TO SCALE	

UNITED STORM WATER INC.
Protecting Our Water Resources

14000 E. VALLEY BLVD
CITY OF INDUSTRY, CA 91746
RAMON MENJIVAR
OFFICE (626)961-9326 EXT 243 FAX (626)434-6994
DIRECT (626)890-7104
EMAIL:ramonm@unitedstormwater.com

CONNECTOR PIPE SCREEN (CPS)
MODEL USW-2M2 FIXED SCREEN WITH HINGED DEFLECTOR ACCESS

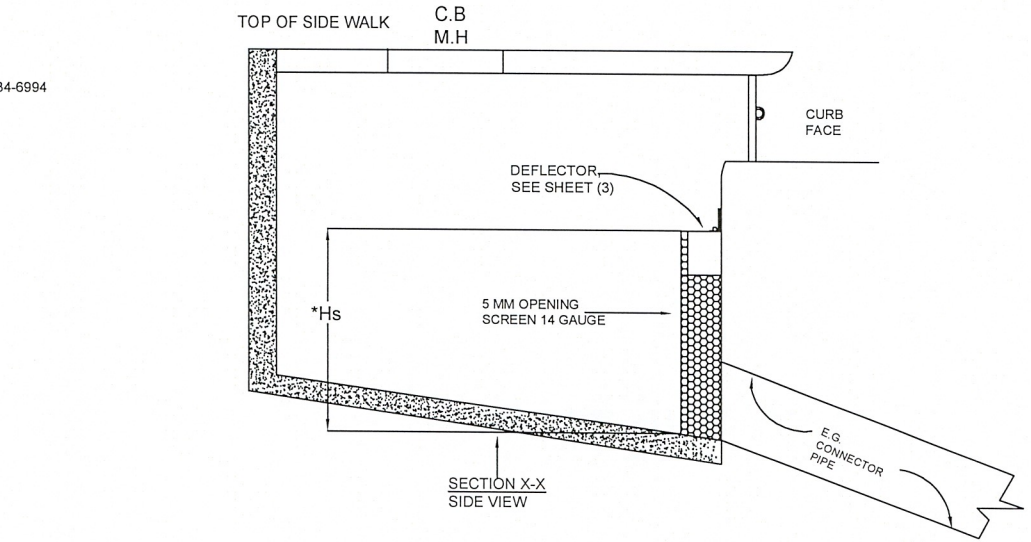

SECTION X-X
SIDE VIEW

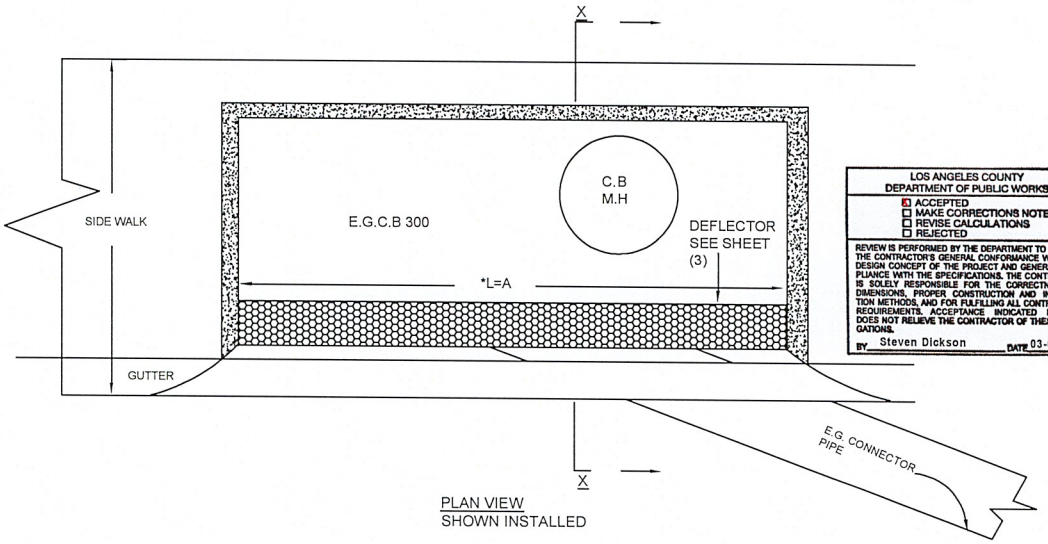

PLAN VIEW
SHOWN INSTALLED

*L=A

LOS ANGELES COUNTY
DEPARTMENT OF PUBLIC WORKS

- [x] ACCEPTED
- [ ] MAKE CORRECTIONS NOTED
- [ ] REVISE CALCULATIONS
- [ ] REJECTED

REVIEW IS PERFORMED BY THE DEPARTMENT TO ENSURE THE CONTRACTOR'S GENERAL CONFORMANCE WITH THE DESIGN CONCEPT OF THE PROJECT AND GENERAL COMPLIANCE WITH THE SPECIFICATIONS. THE CONTRACTOR IS SOLELY RESPONSIBLE FOR THE CORRECTNESS OF DIMENSIONS, PROPER CONSTRUCTION AND INSTALLATION METHODS, AND FOR FULFILLING ALL CONTRACTUAL REQUIREMENTS. ACCEPTANCE INDICATED HEREON DOES NOT RELIEVE THE CONTRACTOR OF THESE OBLIGATIONS.

BY Steven Dickson DATE 03-01-22

General Notes

* SEE APPENDIX A-1 AND APPENDIX B CPS SIZING TABLE1&2

THIS MODEL FOR USE IN CATCH BASINS WHERE THERE IS 10" OR MORE CLEARANCE FROM BOTTOM OF TRAFFIC GRATE, OR CATCH BASINS DECK, TO TOP OF DEFLECTOR FOR MOSQUITO ABATEMENT ACTIVITIES.

No.	Revision/Issue	Date

Firm Name and Address

Project Name and Address

UNITED STORM WATER INC.
14000 E. VALLEY BLVD
CITY OF INDUSTRY CA 91746

Project	Sheet
USW-2M2	4 of 5
Date: 10/10/2021	
Scale: NOT TO SCALE	

CONNECTOR PIPE SCREEN (CPS)
MODEL USW-2M2 FIXED SCREEN WITH HINGED DEFLECTOR ACCESS

UNITED STORM WATER INC.
Protecting Our Water Resources

14000 E. VALLEY BLVD
CITY OF INDUSTRY,CA 91746
RAMON MENJIVAR
OFFICE (626)961-9326 Ext 243
DIRECT (626) 890-7104
EMAIL:ramonm@unitedstormwater.com

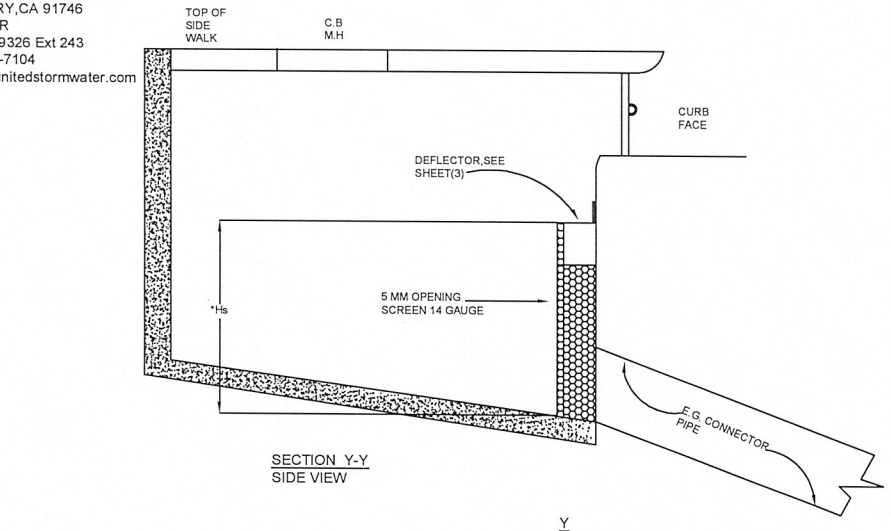

SECTION Y-Y
SIDE VIEW

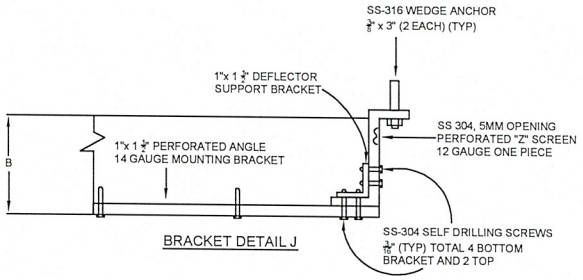

BRACKET DETAIL J

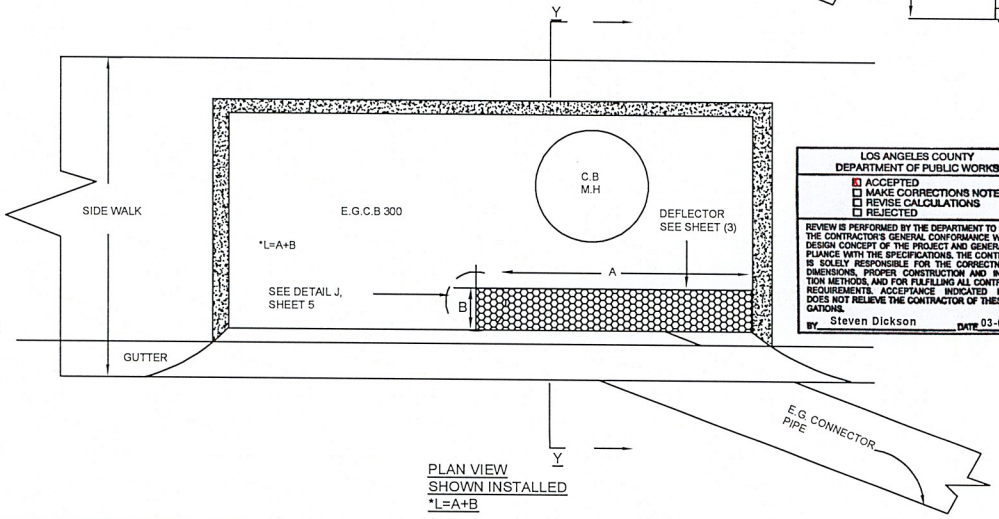

PLAN VIEW
SHOWN INSTALLED
*L=A+B

LOS ANGELES COUNTY
DEPARTMENT OF PUBLIC WORKS

- [x] ACCEPTED
- [ ] MAKE CORRECTIONS NOTED
- [ ] REVISE CALCULATIONS
- [ ] REJECTED

REVIEW IS PERFORMED BY THE DEPARTMENT TO ENSURE THE CONTRACTOR'S GENERAL CONFORMANCE WITH THE DESIGN CONCEPT OF THE PROJECT AND GENERAL COMPLIANCE WITH THE SPECIFICATIONS. THE CONTRACTOR IS SOLELY RESPONSIBLE FOR THE CORRECTNESS OF DIMENSIONS, PROPER CONSTRUCTION AND INSTALLATION METHODS, AND FOR FULFILLING ALL CONTRACTUAL REQUIREMENTS. ACCEPTANCE INDICATED HEREON DOES NOT RELIEVE THE CONTRACTOR OF THESE OBLIGATIONS.

BY Steven Dickson DATE 03-01-22

General Notes

* SEE APPENDIX A-1 AND APPENDIX B CPS SIZING TABLE

** BOTH LEGS OF DEFLECTOR SUPPORT BRACKET MUST EXTEND TO THE TOP OF THE DEFLECTOR AND ALSO EXTEND AT LEAST TO THE BOTTOM OF THE MOUNTING BRACKET

THIS MODEL FOR USE IN CATCH BASINS WHERE THERE IS 10" OR MORE CLEARANCE FROM BOTTOM OF TRAFFIC GRATE, OR CATCH BASIN DECK, TO TOP OF DEFLECTOR FOR MOSQUITO ABATEMENT ACTIVITIES.

No.	Revision/Issue	Date

Firm Name and Address

UNITED STORM WATER INC.
14000 E. VALLEY BLVD
CITY OF INDUSTRY, CA 91746

Project Name and Address

Project	Sheet
USW-2M2	5 OF 5
Date: 10/10/2021	
Scale: Not to Scale	

CITY OF GARDENA

CONTRACT DOCUMENTS AND SPECIFICATIONS

FOR

STORM DRAIN DEBRIS SCREEN FY 2020/2021 & FY 2021/2022, VARIOUS LOCATIONS

JN 998 & 999

OCTOBER 2023

CITY OF GARDENA

CONTRACT DOCUMENTS AND SPECIFICATIONS

FOR

STORM DRAIN DEBRIS SCREEN FY 2020/2021 & FY 2021/2022, VARIOUS LOCATIONS

JN 998 & 999

Plans & Specifications prepared by:



Gary Essex A. Solsona, PE

Cannon Corporation
16842 Von Karman Avenue, Suite 150
Irvine, CA 92606

Memoranda:

Plans and specifications are available at Planwell Administrator, 562.436.9761 or https://www.e-arc.com/location/costa-mesa/ (Go to Planrooms/Order From Planwell/Public Planroom and select City of Gardena under pulldown menu)

Bid Results: https://www.cityofgardena.org/public-contracts/

City of Gardena Public Works Engineering Division: 310.217.9568

CITY OF GARDENA
NOTICE INVITING BIDS
for
STORM DRAIN DEBRIS SCREEN FY 2020/2021 & FY 2021/2022, VARIOUS LOCATIONS
PROJECT NO. JN 998 & 999

Plans and Specifications are available through ARC Document Solutions. Please be advised that there is an additional charge for delivery. Upon payment of the purchase price, they become the property of the purchaser and may not be returned for refund.

You may access the plans through the following website under Public Planroom:

www.e-arc.com/location/costa-mesa/

For help accessing and ordering, please contact a Planwell Administrator at 562.436.9761.

Notice is hereby given that the City of Gardena will receive sealed bids at the office of the City Clerk, City Hall, 1700 W. 162nd Street, Gardena, California, until **1:00 pm** on **Nov. 8, 2023,** and shortly thereafter on this same day, they will be publicly opened and read in the City Clerk's office in-person and via Zoom.

The information to join the bid opening via ZOOM is the following:

Topic: Bid Opening
Time: 1:00 pm on Nov. 8, 2023 (Shortly thereafter the deadline)
Join ZOOM Meeting

https://us02web.zoom.us/j/82565139395
Meeting ID: 825 6513 9395
Dial by phone: +1 669 900 9128 US

Should you have any questions or concern in delivering a bid or joining the ZOOM Meeting, please contact City Clerk's office at (310) 217-9565 or via email at cityclerk@cityofgardena.org.

All bids must be in writing, must be sealed, and must be plainly marked on the outside: **"BID ON PROJECT NO. JN 998 & 999.** Any bid received after the hour stated above for any reason whatsoever, will not be considered for any purpose but will be returned unopened to the bidder.

Bids are required for the entire work as described below:

Install 225 connector pipe screens in existing catch basins around the City of Gardena.

All bidders for this project shall be included in the Los Angeles County Department of Public Works prequalified list of manufacturers/installers listed on Appendix C of these specifications. No bid will be accepted from a Contractor that does not comply with this requirement.

ENGINEER'S ESTIMATE: $ 240,000

The time of completion of contract including material procurement and construction shall be **75 working days** as defined in the latest Standard Specifications for Public Works ("Greenbook"). Liquidated Damages, as defined in Section 6-9, shall be **$800 per each consecutive calendar day**.

Each bidder must submit a proposal to the City, c/o City Clerk in accordance with the Plans and Specifications. Said proposal is to be accompanied by a cash deposit, a certified or cashier's check, or a bidder's bond, made payable to the City of Gardena, in an amount not less than 10 percent of the total bid submitted.

The envelope enclosing the proposal shall be sealed and addressed to the City of Gardena c/o City Clerk, and delivered or mailed to the City at 1700 W. 162nd Street, Gardena, California 90247-3778. The envelope shall be plainly marked in the upper left-hand corner as follows:

ATTENTION: CITY, c/o CITY CLERK
(Bidder's Name and Address) _____

(Number and title of this project) _____

The successful bidder will be required to furnish a faithful performance bond in the amount of 100 percent of the contract price, and a payment bond in the amount of 100 percent of the contract price, both in a form satisfactory to the City Attorney.

The contractor shall have an active **Class "A"** license from the Contractor's State License Board at the time of submitting bid.

Pursuant to Public Contract Code Section 22300, the Contractor may, at Contractor's sole cost and expense, substitute securities equivalent to any monies withheld by the City to insured performance under the contract unless applicable federal regulations or policies do not allow such substitution. Such security shall be deposited with the City, or a state or federally chartered bank as escrow agent, who shall pay such monies to the Contractor upon satisfactory completion of the Contract. The Contractor shall be the beneficial owner of any security substituted for monies withheld and shall receive any accrued interest thereon. Securities eligible for investment shall include those listed in Government Code Section 16430 or bank or savings and loan certificates of deposit. No such substitution shall be accepted until the escrow agreement, letter of credit, form of security and any other document related to said substitution is reviewed and found acceptable by the City Attorney.

The City reserves the right to reject any or all bids and to waive any informality or irregularity in any bid received and to be the sole judge of the merits of the respective bids received. The award, if made, will be made to the lowest responsive responsible bidder.

Bidders are advised that this Project is a public work for purposes of the California Labor Code, which requires payment of prevailing wages. Accordingly, the bidder awarded the Contract and all subcontractors shall be required to pay not less than the prevailing rate of per diem wages, as determined by the Director of the California Department of Industrial Relations, and otherwise comply with the provisions of Section 1770 et seq. of the California Labor Code, California Code of Regulations, Title 8, Section 16000 et seq., and any other applicable laws, rules and regulations adopted with respect thereto ("California Prevailing Wage Laws"). Copies of such prevailing rates of per diem wages are on file at the Gardena City Clerk's office and the office of the City Engineer, and copies shall be made available to any interested party on request. The prevailing rates of per diem wages referred to herein are hereby made a part of this Notice by reference.

Attention is directed to the provisions of Sections 1777.5 and 1777.6 of the Labor Code concerning the employment of apprentices by Contractor or any Subcontractor under it. Contractor and any Subcontractor under if shall comply with the requirements of said sections in the employment of apprentices.

The Contractor is prohibited from performing work on this project with a subcontractor who is ineligible to perform work on the project pursuant to Section 1777.1 or 1777.7 of the Labor Code.
This project is subject to compliance monitoring and enforcement by the Department of Industrial Relations. All contractors and subcontractors must furnish electronic certified payroll records directly to the Labor Commissioner (aka Division of Labor Standards Enforcement) in a format prescribed by the Labor Commissioner no less than monthly.

As of **January 1, 2016**, the requirement to furnish electronic certified payroll records to the Labor Commissioner will apply to all public works projects, whether new or ongoing.

Exceptions: The Labor Commissioner may (but is not required to) excuse contractors and subcontractors from furnishing electronic certified payroll records to the Labor Commissioner on a project that is under the jurisdiction of one of the four legacy DIR-approved labor compliance programs (Caltrans, City of Los Angeles, Los Angeles Unified School District, and County of Sacramento) or that is covered by a qualifying project labor agreement.

These requirements will apply to all public works projects that are subject to the prevailing wage requirements of the Labor Code without regard to funding source.

The State General Prevailing Wage Determination is as established by the California Department of Industrial Relations (available at http://www.dir.ca.gov/DLSR/PWD/index.htm).

Skilled and Trained Workforce: This project is subject to Skilled and Trained Workforce Requirements per Sections 2600 through 2603 of the Public Contract Code.

Award of Contract: The following are conditions to the award of the contract:

I. Each contractor and subcontractor listed on the bid must be registered with the Department of Industrial Relations pursuant to Labor Code Section 1725.5. subject to the limited exceptions set forth in Labor Code Section 1771.1(a) (regarding the submission of a bid as authorized by Business & Professions Code Section 7029.1 or Public Contract Code Section 10164 or 20103.5 provided the contractor is registered to perform public work pursuant to Section 1725.5 at the time the contract was awarded): and
II. No contractor or subcontractor may be awarded this contract unless the contractor and each subcontractor listed on the bid is registered with the Department of Industrial Relations pursuant to Section 17265.5.

Any questions regarding this bid package may be referred to Jun De Castro, Public Works Engineering Division at 310.217.9642.

STORM DRAIN DEBRIS SCREEN VARIOUS LOCATIONS 2020/2021 & 2021/2022, JN 998 & JN 999

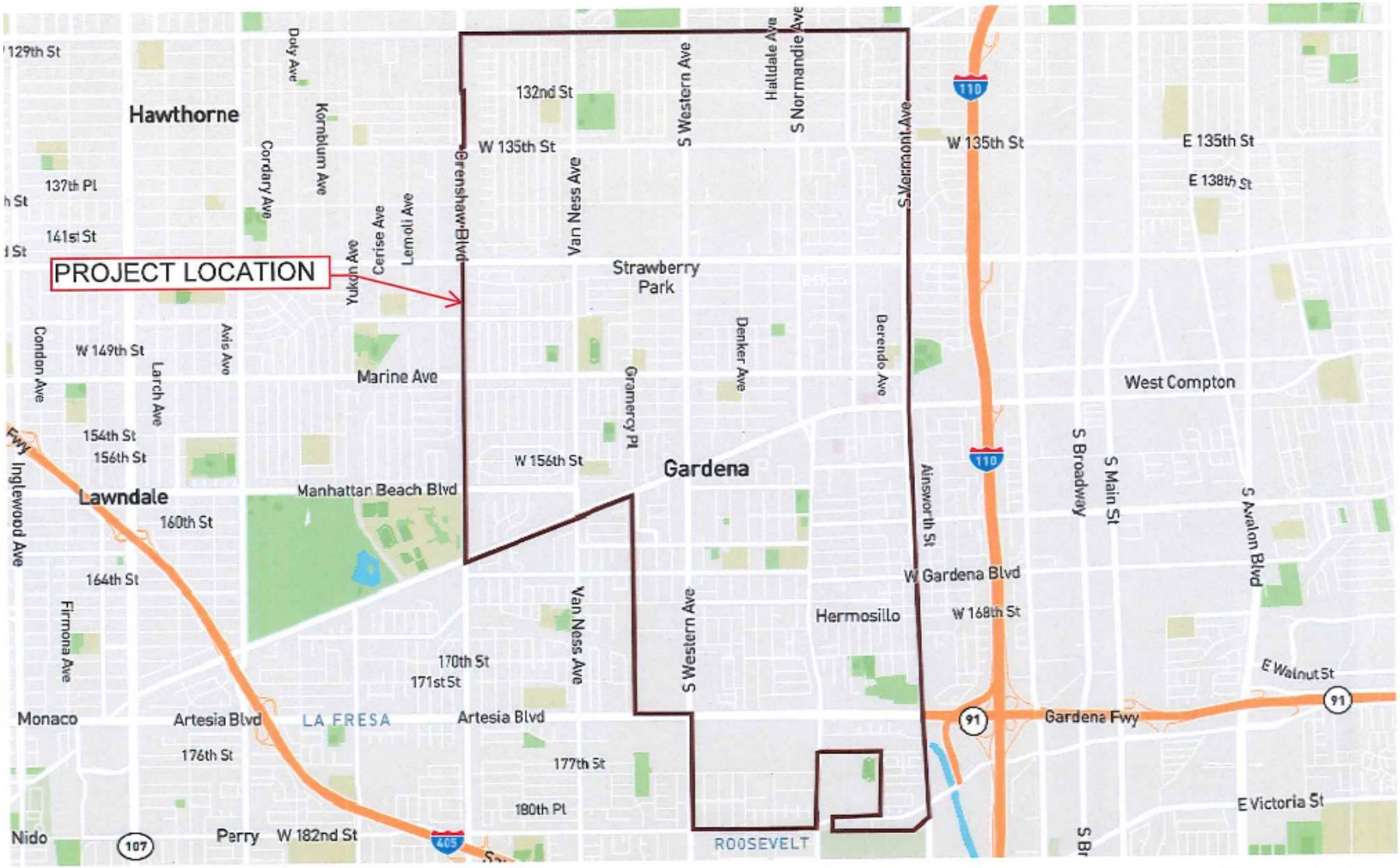

1" = 3800 ft	PROJECT LOCATION MAP	04/26/2022	

This map may represents a visual display of related geographic information. Data provided here on is not guarantee of acutual field conditions. To be sure of complete accuracy, please contact the responsible staff for most up-to-date information.

T A B L E OF C O N T E N T S

STORM DRAIN DEBRIS SCREEN FY 2020/2021 & FY 2021/2022, VARIOUS LOCATIONS JN 998 & 999

DESCRIPTION	PAGE
Title Page	
Notice Inviting Bids	
Location Map	
Table of Contents	i
Instructions to Bidders	ii-iv
BID PROPOSAL (To Be Submitted with Proposal)	
Bid Schedule	BP-2
Acknowledgement of Addenda Received	BP-4
Bidder's Declaration	BP-5
Non-collision Affidavit	BP-7
Declaration of Eligibility to Contract	BP-8
Bid Bond	BP-9
Designation of Subcontractors	BP-10
Construction Project Reference	BP-11
Certificate of Non-Discrimination by Contractors	BP-12
Certification Regarding Debarment, Suspension, Ineligibility and Voluntary Exclusion – Primary Covered Transactions	BP-13
CONTRACT DOCUMENTS (To Be Submitted after Award)	
Agreement	CD-2
Faithful Performance Bond	CD-4
Payment Bond	CD-6
Workers' Compensation Insurance Certificate	CD-8
Indemnification and Hold Harmless Agreement Of Subrogation and Contribution	CD-9
Insurance	CD-10

DESCRIPTION	PAGE
GENERAL PROVISIONS	
PART 1 – GENERAL PROVISIONS	GP-1
Section 1 – General	GP-1
Section 2 – Scope of the Work	GP-4
Section 3 – Control of the Work	GP-7
Section 4 – Control of Material	GP-9
Section 5 – Legal Relations and Responsibilities	GP-10
Section 6 – Prosecution and Progress of the Work	GP-11
Section 7 – Measurement and Payment	GP-13
Section 8 – Facilities for Agency Personnel	GP-14
TECHNICAL PROVISIONS	
PART 1 – MOBILIZATION	TP-1
PART 2 – CONSTRUCTION MATERIALS	TP-2
Section 218 – Connector Pipe Screen	TP-2
PART 3 – CONSTRUCTION METHODS	TP-2
Section 318 – Connector Pipe Screen Installation	TP-2
PART 6 – TEMPORARY TRAFFIC CONTROL	TP-2
Section 600 – Access	TP-2
Section 601 – Temporary Traffic Control for Construction and Maintenance Work Zones	TP-4
APPENDIX	
APPENDIX A: CPS REQUIREMENTS	
APPENDIX B: CPS DRAWINGS	
APPENDIX C: APPROVED CPS VENDORS	
APPENDIX D: SITE PLAN	
APPENDIX E: LIST OF LOCATIONS	

INSTRUCTIONS TO BIDDERS

FORM OF PROPOSAL

The Proposal shall be fully executed and submitted on the forms in the project specifications and shall be enclosed in a sealed envelope marked and addressed as directed in the Notice Inviting Bids.

PRPOSAL / BID DOCUMENTS

All Proposals shall include the following executed documents to be submitted with each bid:

Bidding Schedule

Acknowledgement of Addenda Received

Bidder's Declaration

Non-Collusion Affidavit

Declaration of Eligibility of Contract

Bid Bond

Designation of Subcontractors

Construction Project Reference

Certificate of Non-Discrimination by Contractors

Certification of Regarding Debarment, Suspension, Ineligibility and Voluntary Exclusion – Primary Covered Transitions

DELIVERY OF PROPOSAL

The Proposal shall be delivered by the time and to the place stipulated in the Notice Inviting Bids. It is the bidder's sole responsibility to see that its Proposal is received as stipulated. Any Proposal received after the scheduled closing time for receipt of proposals will be returned to the bidder unopened.

WITHDRAWAL OF PROPOSAL

The Proposal may be withdrawn by the bidder by means of a written request, signed by the bidder or its properly authorized representative. Such written request must be delivered to the place stipulated in the Notice Inviting Bids for receipt of proposals prior to the scheduled closing time for receipt of proposals. No Proposal may be withdrawn after the hour fixed for opening bids.

MODIFICATIONS AND ALTERNATIVE PROPOSALS

Unauthorized conditions, limitations, or provisions attached to the Proposal will render it informal and may be grounds for its rejection as non-responsive. The completed Proposal forms shall be without interlineations, alterations, or erasures. Alternative proposals will not be considered unless specifically requested. Oral, telegraphic, or telephonic proposals or modifications will not be considered.

DISCREPANCIES IN PROPOSALS

In the event there is more than one bid item in a Bidding Schedule, the bidder shall furnish a price for all bid items in the Schedule, and failure to do so will render the Proposal informal and may be grounds for its rejection as non-responsive. The bidder shall state in words and figures the unit prices or the specific sums as the case may be, for which it proposes to supply the labor, materials, supplies, or machinery, and completely perform the Contract. The total amount of each item bid and the total amount of the bid shall be stated in words and figures.

In case of any discrepancy between the words and the figures, the words shall prevail. If the unit price and the total amount named by a bidder for any items are not in agreement, the unit price alone will be considered as representing the bidder's intention and the total will be corrected to conform thereto.

PROPOSAL GUARANTEE – BIDDER'S SECURITY

Each bidder shall submit with his Proposal cash, an unconditional certified or cashier's check, or a bidder's bond, in the sum of the percentage of the bid stated in the Notice Inviting Bids, payable to the City as a guarantee that the bidder will, if its Proposal is accepted, execute the Contract and furnish a satisfactory Faithful Performance Bond, a satisfactory Payment Bond and insurance certificates as specified herein.

If a bidder to whom an award is made, fails or refuses to sign the Contract or furnish the required bonds and certificates, all within the time stated in Section 2-1.5 of the Special Provisions herein, the funds represented by said cash, check or bidder's bond shall be forfeited and become and remain the property of the City; the amount thereof being agreed to by the bidder and the surety as a bid bond forfeiture due the City because of the delay in the execution of the Contract and in the performance of work thereunder, resulting from such failure or refusal, except that if the City awards the contract to the next lowest responsive responsible bidder, only that portion of the bidder's security equal to the difference between the two bids will be forfeited.

A Bid Bond must be obtained from a corporate surety authorized to do business as such in the State of California as an "admitted surety insurer" and shall be on the form furnished by the City or one substantially in conformance with it. Certified or cashier's checks must be drawn on a solvent state or nationally chartered bank or branch thereof in the State of California. The liability of the City in connection with the checks shall be limited to the return of the checks (without interest) as provided in Section 2-1.6 of the Special Provisions bound herein.

DISQUALIFICATION OF BIDDERS

A person, firm, or corporation shall NOT be allowed to make or file, or to be interested in, more than one bid, except an alternative bid when specifically requested; provided, however, a person, firm, or corporation who has submitted a sub-proposal to a bidder submitting a Proposal, or who has quoted prices on materials to such bidders, is not thereby disqualified from submitting a sub-proposal or from quoting prices to other bidders submitting proposals, or from submitting a Proposal as a prime contractor. Similarly, failure to comply with the registration requirements of Labor Code Section 1725.5, as further described in the Notice Inviting Bids, will disqualify a bidder.

ADDITIONAL REQUIREMENTS

The bidder's attention is directed to the Special Provisions and Technical Provisions bound herein for additional requirements of the Proposal and Contract Documents.

CONTRACT DOCUMENTS

Contract Documents are to be submitted within twenty-one (21) calendar days AFTER award of contract. Unless extended by agreement of the City, failure to timely submit executed Contract Documents may be grounds for rejecting the bid award and forfeiture of the bid security. See enclosed documents commencing on page CD-1.

BID PROPOSAL (BP)

STORM DRAIN DEBRIS SCREEN FY 2020/2021 & FY 2021/2022,

VARIOUS LOCATIONS

PROJECT NO. JN998 & JN999

Contractor: _____

Address: _____

Phone: _____

Fax: _____

License No.: _____

D.I.R. No. _____

Email: _____

To Be Submitted

WITH

Bid Package

BID PROPOSAL

PROJECT NO. JN 998 & 999

BID SCHEDULE

The undersigned, having examined the proposed Contract Documents titled:

STORM DRAIN DEBRIS SCREEN FY 2020/2021 & FY 2021/2022,
VARIOUS LOCATIONS
JN 998 & 999

and having visited the site and examined the conditions affecting the work, hereby proposes and agrees to furnish all labor, materials, equipment, and appliances, and to perform operations necessary to complete the work as required by said proposed Contract Documents and itemized bid schedule below. All work shall be completed within **75** **Working Days** from the date the Notice of Proceed is issued by the Engineer.

Item No.	Item Description	Unit	Approx. Quantity	Unit Price in Figures	Item Total
1	Traffic Control	LS	1	$	$
2	Install Connector Pipe Screen (CPS) in Existing City Catch Basin	EA	32	$	$
3	Install Connector Pipe Screen (CPS) in Existing County Catch Basin	EA	179	$	$
4	Los Angeles County Flood Construction Permit Fee	LS	1	$ 161	$ 161

BID SCHEDULE (Continued)

TOTAL CONTRACT BID:

(Figures) $ _____

(Words) _____

*** In case of error in extension of price into the total price column, the unit price will govern.**

All work required and shown on the construction plans and this specification for which no price or item is listed on this proposal, it shall be understood that such work, equipment, labor, tools and materials shall be provided without extra charge, allowance or direct payment of any kind. Payment for performing such work or furnishing such equipment, labor, tools and materials shall be included in the above lump sum or unit bid prices and no additional compensation will paid therefor.

If the City determines that any of the unit bid prices are significantly unbalanced to the potential detriment of the City, the bid will be replaced as non-responsive.

In case of any discrepancy between the words and the figures, the words shall prevail. If the unit price and the total amount for any item are not in agreement, the unit price alone shall be considered to represent the bidder's intention and all totals will be corrected to conform thereto.

Attached hereto is cash, a certified check, a cashier's check, or a bidder's bond in the amount of _____Dollar
s, said amount being not less than 10 percent of the amount bid. Pursuant to Public Contract Code Sections 20172 and 20174, it is agreed a portion equal to the difference between the low bid and second low bid shall be retained as a bid bond forfeiture by the City if the undersigned fails or refuses to execute the Contract and furnish the required bonds and certificates of insurance within the time provided.

_____
Name of Bidder

_____
Signature of Bidder

BID PROPOSAL

PROJECT NO. JN 998 & 999

ACKNOWLEDGEMENT OF ADDENDA RECEIVED

The Bidder shall acknowledge the receipt of addenda by number and date each addendum received.

Addendum No. ____ Date _____ Addendum No. ____ Date _____

Addendum No. ____ Date _____ Addendum No. ____ Date _____

Addendum No. ____ Date _____ Addendum No. ____ Date _____

Addenda will be issued only through the ARC Document Solutions and access under their Public Planroom (www.crplanwell.com). It is the Bidder's sole responsibility to visit the Planroom to obtain and administer any Addendum related to this bid. **An Addendum must be acknowledged above by a bidder in its submitted form of Proposal.**

If an addendum or addenda have been issued by the City and not noted above as being received by the Bidder, the Bid Proposal may be rejected.

_____ _____

Bidder's Signature Date

BID PROPOSAL

PROJECT NO. JN 998 & 999

BIDDER'S DECLARATION

It is understood and agreed that:

1. The undersigned has carefully examined all documents which will form a part of the Contract; namely, the Notice Inviting Bids, the Instructions to Bidders, this Proposal, the Bid Bond, the Contract, the Faithful Performance Bond, the Payment Bond, the federal requirements, if any, the Plans and Specifications, the Special Provisions, and the Technical Provisions.

2. The undersigned has, by investigation at the site of the work and otherwise, satisfied himself as to the nature and location of the work and fully informed himself as to all conditions and matters, which can in any way affect the work or the cost thereof.

3. The undersigned fully understands the scope of work and has checked carefully all words and figures inserted in this Proposal and he further understands that the City will not be responsible for any errors or omissions in the preparation of the Proposal.

4. The undersigned agrees and acknowledges that he is aware of the provisions of Section 3700 of the Labor Code which requires every employer to be insured against liability for workers' compensation or to undertake self-insurance in accordance with the provisions of that Code, and that the undersigned will comply with such provisions before commencing the performance of the Contract if it is awarded to the undersigned.

The undersigned will execute the Contract and furnish the required statutory bonds and certificates of insurance within the period of time specified in the Contract Documents.

The undersigned will begin work after award of Contract and a Notice to Proceed has been given as herein specified and will complete said work within the time specified in the Bidding Schedule.

5. The undersigned certifies that this Proposal is genuine and not sham or collusive, or made in the interest or on behalf of a person not herein named, and the undersigned has not directly or indirectly induced or solicited any other bidder to put in a sham bid nor induced any other person, firm, or corporation to refrain from bidding. The undersigned has not in any manner sought by collusion to secure for himself any advantage over any other bidder.

6. The undersigned will accept an award and enter into a Contract for all work scheduled herein on which he puts in a bid. The awards for such work are to be entirely at the discretion of the City after evaluation of the bids as submitted. The undersigned agrees that the City shall recover or retain as a bid bond forfeiture an amount equal to the difference between the low bid and amount of the bid of the bidder with whom the City enters into a Contract, and the surplus, if any, shall be returned to the lowest bidder in accordance with the provisions of the Public Contract Code Sections 20172 and 20174 in the event of his failure to execute a Contract and furnish required bonds and insurance therefor within the time provided.

BIDDER'S DECLARATION (Continued)

7. The undersigned bidder stated under penalty of perjury that the representations made in submitting this bid are, to the best of his/her knowledge, true, accurate, and complete.

Respectfully submitted,

Contractor's Business Name	Contractor (Print) Title
Business Address: Street	Signature Title
City State Zip	Contractor's License No. and Classification
Business Phone Number	Business Fax Number
Date	
Name Title	Residence: Street
City State Zip	Residence Phone Number

Note: If the bid is made by an individual, it must be signed with the full name of the bidder, whose address must be given: if it is made by a firm, it must be signed in the co-partnership's name by a general partner thereof, who shall also sign his or her own name, and the name and full address of each partner (general and/or limited) must be given; and if it is made by a corporation, it must be signed by a properly authorized officer, the corporate name shall be set forth, and the corporate seal shall be affixed.

BID PROPOSAL

PROJECT NO. JN 998 & 999

NON-COLLUSION AFFIDAVIT

(To be executed by Bidder and submitted with Bid)

State of California

County of Los Angeles

_____ being first duly sworn, deposes and says that he or she is _____ of _____ _____ the party making the foregoing bid, that the bid is not made in the interest of, or on the behalf of, any undisclosed person, partnership, company, association, organization, or corporation; that the bid is genuine and not collusive or sham; that the bidder has not directly or indirectly colluded, conspired, connived, or agreed with any bidder or anyone else to put in a sham bid, or that anyone shall refrain from bidding; that the bidder has not in any manner, directly or indirectly, sought by agreement, communication, or conference with anyone to fix the bid price of the bidder or any other bidder, or to fix any overhead, profit, or cost element of that of any other bidder, or to secure any advantage against the public body awarding the contract of anyone interested in the proposed contract; that all statements contained in the bid are true; and, further, that the bidder has not, directly or indirectly, submitted his or her bid price or any breakdown thereof, or the contents thereof, or divulged information or data relative thereto, or paid, and will not pay fee to any corporation, or agent thereof to effectuate a collusive or sham bid.

_____
NAME OF BIDDER

_____
SIGNATURE OF BIDDER

_____
ADDRESS OF BIDDER

_____
CITY STATE ZIP

ALL SIGNATURES MUST BE WITNESSED BY NOTARY
(attach appropriate jurats)

BID PROPOSAL

PROJECT NO. JN 998 & 999

DECLARATION OF ELIGIBILITY TO CONTRACT

[Labor Code Section 1777.1; Public Contract Code Section 6109]

The undersigned, a duly authorized representative of the contractor, certifies and declares that:

1. The undersigned contractor is aware of Sections 1777.1 and 1777.7 of the California Labor Code, which prohibit a contractor or subcontractor who has been found by the Labor Commissioner or the Director of Industrial Relations to be in violation of certain provisions of the Labor Code, from bidding on, being awarded, or performing work as a subcontractor on a public works project for specified periods of time.

2. The undersigned contractor is not ineligible to bid on, be awarded or perform work as a subcontractor on a public works project by virtue of Sections 1771.1 or 1777.7 of the California Labor Code or any other provision of law.

3. The undersigned contractor is aware of California Public Contract Code Section 6109, which states:

> "(a) A public entity, as defined in Section 1100 [of the Public Contract Code], may not permit a contractor or subcontractor who is ineligible to bid or work on, or be awarded, a public works project pursuant to Section 1777.1 or 1777.7 of the Labor Code to bid on, be awarded, or perform work as a subcontractor on, a public works project. Every public works project shall contain a provision prohibiting a contractor from performing work on a public works project with a subcontractor who is ineligible to perform work on the public works project pursuant to Section 1771.1 or 1777.7 of the Labor Code."
>
> "(b) Any contract on a public works project entered into between a contractor and a debarred subcontractor is void as a matter of law. A debarred subcontractor may not receive any public money for performing work as a subcontractor on a public works contract, and any public money that may have been paid to a debarred subcontractor by a contractor on the project shall be returned to the awarding body. The contractor shall be responsible for the payment of wages to workers of a debarred subcontractor who has been allowed to work on the project."

4. The undersigned contractor has investigated the eligibility of each and every subcontractor the undersigned contractor intends to use on this public works project, and has determined that none of them is ineligible to perform work as a subcontractor on a public works project by virtue of the foregoing provisions of the Public Contract Code, Sections 1771.1 or 1777.7 of the Labor Code, or any other provision of law.

I declare under penalty of perjury under the laws of the State of California that the foregoing is true and correct. Executed this _____ day of _____, 20___, at _____ _____ *(place of execution)*, California_____.

Signature: _____ Name: _____

Title: _____ Company: _____

BID PROPOSAL

PROJECT NO. JN 998 & 999

BID BOND

KNOW ALL MEN BY THESE PRESENTS:

THAT _____, as Principal,
and _____, as Surety,
are held firmly bound unto the City of Gardena in the sum of $_____;
_____DOLLARS,
(not less than ten percent of total amount of bid)
for the payment of which sum well and truly to be made, we bind ourselves, our heirs, executors, administrators, successors, and assigns, jointly and severally, firmly by these presents.

WHEREAS, said Principal has submitted a bid to the City to perform all work required under the following:

PROJECT: STORM DRAIN DEBRIS SCREEN FY 2020/2021 & FY 2021/2022,
VARIOUS LOCATIONS
JN 998 & 999

NOW, THEREFORE, if said Principal is awarded a Contract by the City and, within the time and in the manner required in the Specifications for said project, enters into the written form of Contract bound with said Specifications and furnishes the required bonds, one to guarantee faithful performance and the other to guarantee payment for labor and materials, then this obligation shall be null and void, otherwise it shall remain in full force and effect. In the event suit is brought upon this bond by the City and judgment is recovered, said Surety shall pay all costs incurred by the City in such suit, including a reasonable attorneys' fee to be fixed by the court. Surety hereby waives the provisions of California Civil Code §2845.

SIGNED AND SEALED, this day of _____, 20_____.

_____(SEAL) _____(SEAL)
Principal Surety

BY:_____ BY:_____
Signature Signature

Note: This bond must be dated, all signatures must be notarized, and evidence of the authority of any person signing as attorney–in-fact must be attached.

BID PROPOSAL

PROJECT NO. JN 998 & 999

DESIGNATION OF SUBCONTRACTORS

In compliance with the "Subletting and Subcontracting Fair Practices Act" being Sections 4100-4113 of the Public Contract Code of the State of California, and any amendments thereto, each bidder shall set forth below the name and location of the place of business of each subcontractor who will perform work or labor or render service to the prime contractor in or about the construction of the work or improvement in an amount in excess of one-half (1/2) of one percent (1%) of the prime contractor's total bid, and shall further set forth the portion of the work which will be done by each subcontractor. Only one subcontractor for each such portion shall be listed.

If the contractor fails to specify a subcontractor for any portion of the work to be performed under the contract, he shall be deemed to have agreed to perform such portion himself, and he shall not be permitted to subcontract that portion of the work except under the conditions hereinafter set forth.

Subletting or subcontracting of any portion of the work to which subcontractor was designated in the original bid shall only be permitted in cases of public emergency or necessity, and then only after a finding reduced to writing as a public record of the legislative body of the City.

Portion of Work %	Subcontractor's Name & Address	Type of Work	State License Number	Class	D.I.R. Number

Not more than _____%.

BID PROPOSAL

PROJECT NO. JN 998 & 999

CONSTRUCTION PROJECT REFERENCE

In order to more fully evaluate your background and experience for the project herein proposed, please submit a list of Public Works and/or similar construction projects completed or in progress within the last three (3) years. Failure to provide this information may constitute grounds for rejection of your bid as non-responsive.

Number of years as a contractor in construction work of this type: _____

Three projects of this type recently completed:

1. Name (Firm/Agency): _____
   Address: _____
   Contact Person: _____ Telephone No.: _____
   Title of Project: _____
   Project Location: _____
   Date of Completion: _____ Contract Amount: $ _____

2. Name (Firm/Agency): _____
   Address: _____
   Contact Person: _____ Telephone No.: _____
   Title of Project: _____
   Project Location: _____
   Date of Completion: _____ Contract Amount: $ _____

3. Name (Firm/Agency): _____
   Address: _____
   Contact Person: _____ Telephone No.: _____
   Title of Project: _____
   Project Location: _____
   Date of Completion: _____ Contract Amount: $ _____

NOTE: If requested by the City, the bidder shall furnish a certified financial statement, references, and other information sufficiently comprehensive to permit an appraisal of his current financial condition.

Bidder's Signature _____

BID PROPOSAL

PROJECT NO. JN 998 & 999

CERTIFICATE OF NON-DISCRIMINATION BY CONTRACTORS

As suppliers of goods or services to the City, the firm listed below certifies that it does not discriminate in its employment with regard to race, color, religion, sex, or national origin; that it is in compliance with all applicable federal, state, and local directives, and executive orders regarding non-discrimination in employment; and that it agrees to pursue positively and aggressively the principle of equal opportunity in employment.

We agree specifically:

1. To establish or observe employment policies which affirmatively promote opportunities for minority persons at all job levels.

2. To communicate this policy to all persons concerned, including all company employees, outside recruiting services, especially those serving minority communities, and to the minority communities at large.

3. To take affirmative steps to hire minority employees within the company.

FIRM_____

TITLE OF PERSON SIGNING_____

SIGNATURE_____

DATE_____

Please include any additional information available regarding equal opportunity employment programs now in effect within your company:

_____

_____

_____

_____

_____

_____

BID PROPOSAL

PROJECT NO. JN 998 & 999

CERTIFICATION REGARDING DEBARMENT, SUSPENSION, INELIGIBILITY AND VOLUNTARY EXCLUSION – PRIMARY COVERED TRANSACTIONS

(BEFORE COMPLETING CERTIFICATION, READ INSTRUCTIONS ON NEXT PAGE)

The Contractor shall not perform Work with any Subcontractor that has been debarred or suspended pursuant to California Labor Code Section 1777.1 or any other federal or State law providing for the debarment of contractors from public works. The Contractor and Subcontractors shall not be debarred or suspended throughout the duration of the Contract pursuant to Labor Code Section 1777.1 or any other federal or State law providing for the debarment of contractors from public works. If the Contractor or any Subcontractor becomes debarred or suspended during the duration of the Project, the Contractor shall immediately notify the City.

1. The prospective primary participant certifies to the best of its knowledge and belief, that it and its principals:

    a. Are not presently debarred, suspended, proposed for debarment, declared ineligible, or voluntarily excluded from covered transactions by any Federal department or agency;

    b. Have not within a 5-year period preceding this proposal been convicted of or had a civil judgment rendered against them for commission of fraud or a criminal offense in connection with obtaining, attempting to obtain, or performing a public (Federal, State or local) transaction or contract under a public transaction; violation of Federal or State antitrust statutes or commission of embezzlement, theft, forgery, bribery, falsification or destruction of records, making false statement, or receiving stolen property;

    c. Are not presently indicted for or otherwise criminally or civilly charged by a governmental entity (Federal, State or local) with commission of any of the offenses enumerated in paragraph 1b of this certification; and

    d. Have not within a 5-year period preceding this application/proposal had one or more public transactions (Federal, State or local) terminated for cause or default.

2. Where the prospective primary participant is unable to certify to any of the statements in this certification, such prospective participant shall attach an explanation to this proposal.

Signature: _____ Name: _____

Title: _____ Company: _____

CERTIFICATION REGARDING DEBARMENT, SUSPENSION, INELIGIBILITY AND VOLUNTARY EXCLUSION – PRIMARY COVERED TRANSACTIONS (Continued)

INSTRUCTIONS FOR CERTIFICATION

1. By signing and submitting this proposal, the prospective primary participant is providing the certification set out below.
2. The inability of a person to provide the certification required below will not necessarily result in denial of participation in this covered transaction. The prospective participant shall submit an explanation of why it cannot provide the certification set out below. The certification or explanation will be considered in connection with the department or agency's determination whether to enter into this transaction. However, failure of the prospective primary participant to furnish a certification or an explanation shall disqualify such person from participation in this transaction.
3. The certification in this clause is a material representation of fact upon which reliance was placed when the department or agency determined to enter into this transaction. If it is later determined that the prospective primary participant knowingly rendered an erroneous certification, in addition to other remedies available to the Federal Government, the department or agency may terminate this transaction for cause or default.
4. The prospective primary participant shall provide immediate written notice to the department or agency to which this proposal is submitted if at any time the prospective primary participant learns that its certification was erroneous when submitted or has become erroneous by reason of changed circumstances.
5. The terms "covered transaction," "debarred," "suspended," "ineligible," "lower tier covered transaction," "participant," "person," "primary covered transaction," "principal," "proposal," and "voluntarily excluded," as used in this clause, have the meanings set out in the Definitions and Coverage sections of the rules implementing Executive Order 12549. You may contact the department or agency to which this proposal is submitted for assistance in obtaining a copy of those regulations (13 CFR Part 145).
6. The prospective primary participant agrees by submitting this proposal that, should the proposed covered transaction be entered into, it shall not knowingly enter into any lower tier covered transaction with a person who is debarred, suspended, declared ineligible, or voluntarily excluded from participation in this covered transaction, unless authorized by the department or agency entering into this transaction.
7. The prospective primary participant further agrees by submitting this proposal that it will include the clause titled "Certification Regarding Debarment, Suspension, Ineligibility and Voluntary Exclusion--Lower Tier Covered Transactions," provided by the department or agency entering into this covered transaction, without modification, in all lower tier covered transactions and in all solicitations for lower tier covered transactions.
8. A participant in a covered transaction may rely upon a certification of a prospective participant in a lower tier covered transaction that it is not debarred, suspended, ineligible, or voluntarily excluded from the covered transaction, unless it knows that the certification is erroneous. A participant may decide the method and frequency by which it determines the ineligibility of its principals. Each participant may, but is not required to, check the Nonprocurement List.
9. Nothing contained in the foregoing shall be construed to require establishment of a system of records in order to render in good faith the certification required by this clause. The knowledge and information of a participant is not required to exceed that which is normally possessed by a prudent person in the ordinary course of business dealings.
10. Except for transactions authorized under paragraph 6 of these instructions, if a participant in a covered transaction knowingly enters into a lower tier covered transaction with a person who is suspended, debarred, ineligible, or voluntarily excluded from participation in this transaction, in addition to other remedies available to the Federal Government, the department or agency may terminate this transaction for cause or default.

CONTRACT DOCUMENTS (CD)

STORM DRAIN DEBRIS SCREEN FY 2020/2021 & FY 2021/2022, VARIOUS LOCATIONS

PROJECT NO. JN 998 & 999

To be Submitted within twenty-one (21) calendar days

AFTER Award of Contract

CONTRACT DOCUMENT

PROJECT NO. JN 998 & 999

AGREEMENT

THIS AGREEMENT, made and entered into this _____ day of _____, 20_____, by and between CITY OF GARDENA in the State of California, hereinafter referred to as "CITY" and_____, hereinafter referred to as "CONTRACTOR."

The City and the Contractor mutually agree as follows:

ARTICLE I.

THE PROJECT

For and in consideration of the mutual promises set forth herein, Contractor agrees to perform and complete in a good and workmanlike manner all work required by the Contract Documents for City Project No. JN 998/999, which is described as follows:

Title: STORM DRAIN DEBRIS SCREEN FY 2020/2021 & FY 2021/2022, VARIOUS LOCATIONS
JN 998 & 999

Said work shall be performed in accordance with the Plans, Specifications and other Contract Documents, all of which are referenced in Article III hereof and incorporated herein as though fully set forth. Contractor shall furnish at its own expense all labor, materials, equipment and services necessary therefor, except such labor, materials, equipment and services as are provided in the Contract Documents to be furnished by City.

This project is subject to Skilled and Trained Workforce Requirements per Sections 2600 through 2603 of the Public Contract Code.

ARTICLE II.

CONTRACT SUM AND PAYMENT

For performing and completing the work in accordance with the Contract Documents, City shall pay Contractor, in full compensation therefor, the contract sum set forth in the Bidding Schedule. Said sum shall constitute payment in full for all work performed hereunder, including, without limitation, all labor, materials, equipment, tools and services used or incorporated in the work, supervision, administration, overhead, expenses and any and all other things required, furnished or incurred for completion of the work as specified in the Contract Documents. City shall make payments to Contractor on account of the contract sum at the time, in the manner, and upon the conditions specified in the Contract Documents.

ARTICLE III.

CONTRACT DOCUMENTS

The Contract Documents, which constitute the entire agreement between the City and the Contractor, are enumerated as follows: Proposal Documents, including the Notice Inviting Bids, Instructions to Bidders, Bidding Schedule, Bidder's Declaration, Designation of Subcontractors, Bidder's Assurance, and Fair Employment Practices documents; this Agreement; Standard Specifications; Special Provisions; Technical Provisions; Drawings; Plans; and all addenda issued prior to and all modifications issued after the execution of this Agreement. These form

the Contract, and all are as fully a part of the Contract as if attached to this Agreement or repeated herein.

ARTICLE IV.

EFFECTIVE DATE

This Agreement shall become effective and commence as of the date set forth below on which the last of the parties, whether City or Contractor, executes said Agreement.

IN WITNESS WHEREOF, the parties hereto have caused this Agreement to be executed and attested by their proper officers thereunto duly authorized.

CITY

By:_____
MAYOR (Sign)

Date: _____

SEAL

Attest:
By: _____
CITY CLERK (Sign)

Date:_____

CONTRACTOR

By:_____
Sign / Title

Date: _____

Attest: (Contractor)

By:_____
Sign / Title

Date: _____

APPROVED AS TO FORM:

By:_____
CITY ATTORNEY (Sign)

Date: 10-13-2023

CONTRACT DOCUMENT

PROJECT NO. JN 998 & 999

FAITHFUL PERFORMANCE BOND

WHEREAS, the City of Gardena has awarded to _____, hereinafter designated as the "Principal", a Contract for:

PROJECT: STORM DRAIN DEBRIS SCREEN FY 2020/2021 & FY 2021/2022,
VARIOUS LOCATIONS
JN 998 & 999

WHEREAS, said Principal is required under the terms of said Contract to furnish a bond for the faithful performance of said Contract;

NOW, THEREFORE, we,_____
as Principal, and_____
as Surety, are held and firmly bound unto the City in the sum of_____
_____
Dollars ($_____), this amount being not less than one hundred percent (100%) of the total Contract price, lawful money of the United States of America, for payment of which sum well and truly to be made we bind ourselves, our heirs, executors, administrators, and successors, jointly and severally, firmly by these presents. In case suit is brought upon this bond, the Surety will pay all court costs and reasonable attorneys' fees to the City of Gardena in an amount to be fixed by the court.

THE CONDITION OF THIS OBLIGATION IS SUCH THAT, if the hereby bounded Principal, his or its heirs, executors, administrators, successors, or assigns, shall in all things stand to and abide by, well and truly keep and perform all the undertakings, terms, covenants, conditions and agreements in the said Contract and any alteration thereof, made as therein provided, all within the time and in the manner therein designated and in all respects according to their true intent and meaning, then this obligation shall become null and void; otherwise, it shall be and remain in full force and effect.

FURTHER, the Surety, for value received, hereby stipulates and agrees that no change, extension of time, alteration, addition, or modification to the terms of the Contract, or of the work to be performed thereunder, or the specifications for the same, shall in any way affect its obligations under this bond, and it does hereby waive notice of any such change, extension of time, alteration, addition, or modification to the terms of the Contract or to the work or to the specifications thereunder. Surety hereby waives the provisions of California Civil Code §§ 2845 and 2849. The City is the principal beneficiary of this bond and has all rights of a party hereto.

This bond shall remain in full force and effect for a warranty period of one full year after acceptance of the job by the City.

IN WITNESS WHEREOF, three (3) identical counterparts of this instrument, each of which shall for all purposes be deemed an original thereof, have been duly executed by the Principal and

Surety named herein, on the_____ day of_____, 20___, the name and corporate seal of each corporate party being hereto affixed and these presents duly signed by its undersigned representative pursuant to authority of its governing body.

[PRINCIPAL]

By _____

Title _____

_____

Signature

[SURETY]

By _____

Title _____

Address _____

_____

Phone No. _____

_____

Signature

All signatures must be notarized.

Appropriate modifications shall be made to this form if the bond is being furnished for the performance of an act not provided for by agreement.

Corporations must affix corporate seal.

CONTRACT DOCUMENT

PROJECT NO. JN 998 & 999

PAYMENT BOND

WHEREAS, the City of Gardena has awarded to _____, as Contractor, a contract for the work described as follows:

PROJECT: STORM DRAIN DEBRIS SCREEN FY 2020/2021 & FY 2021/2022,
VARIOUS LOCATIONS
JN 998 & 999

AND WHEREAS, said Contractor is required to furnish a bond in connection with said contract, to secure the payment of claims of laborers, mechanics, materialmen and other persons, as provided by law;

NOW, THEREFORE, we, the undersigned Contractor and Surety, are held firmly bound unto the City in the sum of _____, Dollars ($_____) this amount being not less than one hundred percent (100%) of the total Contract price, for which payment well and truly to be made we bind ourselves, our heirs, executors and administrators, successors and assigns, jointly and severally, firmly by these presents.

THE CONDITION OF THIS OBLIGATION IS SUCH THAT, if said Contractor, its heirs, executors, administrators, successors, assigns, or subcontractors shall fail to pay any of the persons named in Civil Code Section 3181, or amounts due under the Unemployment Insurance Code with respect to work or labor performed under the contract, or any amounts required to be deducted, withheld, and paid over to the Employment Development Department from the wages of employees of the Contractor and its subcontractors pursuant to Section 13020 of the Unemployment Insurance Code, or any other amounts due to persons under any applicable project contract or law, with respect to such work and labor, then the Surety or Sureties herein will pay for the same in an amount not exceeding the sum specified in this bond, otherwise the above obligation shall be void. In case suit is brought upon this bond, the said Surety will pay all court costs and reasonable attorneys' fees to the plaintiff(s) and City in an amount to be fixed by the court.

This bond shall inure to the benefit of any of the persons named in Civil Code Section 3181 as to give a right of action to such persons or their assigns in any suit brought upon this bond.

Further, the Surety, for value received, hereby stipulates and agrees that no change, extension of time, alteration, addition, or modification to the terms of the Contract, or of the work to be performed thereunder, or the specifications for the same, shall in any way affect its obligations under this bond, and it does hereby waive notice of such change, extension of time, alteration, addition, or modification to the terms of the Contract or to the work or to the specifications thereunder. Surety hereby waives the provisions of California Civil Code §§ 2845 and 2849.

This bond shall remain in full force and effect for six full months after the period in which verified claims may be filed as provided for in Section 3184 of the California Civil Code.

IN WITNESS WHEREOF, we have hereunto set our hands and seals on this_____day of _____20_____.

[PRINCIPAL]

By _____

Title _____

_____

Signature

[SURETY]

By _____

Title _____

Address _____

_____

Phone No. _____

_____

Signature

All signatures must be notarized.

Appropriate modifications shall be made to this form if the bond is being furnished for the performance of an act not provided for by agreement.

Corporations must affix corporate seal.

CONTRACT DOCUMENT

PROJECT NO. JN 998 & 999

WORKER'S COMPENSATION INSURANCE CERTIFICATE

The Contractor shall execute the following form as required by the California Labor Code, Sections 1860 and 1861:

> I am aware of the provisions of Section 3700 of the Labor Code which require every employer to be insured against liability for workers' compensation or to undertake self-insurance in accordance with the provisions of that Code, and I will comply with such provisions before commencing the performance of the work of the Contract.

DATED:_____

_____
CONTRACTOR

By_____
Signature

_____
Title

ATTEST:

By_____
Signature

_____
Title

CONTRACT DOCUMENT

PROJECT NO. JN 998 & 999

INDEMNIFICATION AND HOLD HARMLESS AGREEMENT AND WAIVER OF SUBROGATION AND CONTRIBUTION

STORM DRAIN DEBRIS SCREEN FY 2020/2021 & FY 2021/2022,
VARIOUS LOCATIONS
JN 998 & 999

To the fullest extent permitted by law, Indemnitor hereby agrees, at its sole cost and expense, to defend, protect, indemnify, and hold harmless the City of Gardena and its respective elected officials, officers, attorneys, agents, employees, volunteers, successors, and assigns (collectively "Indemnitees") from and against any and all damages, costs, expenses, liabilities, claims, demands, causes of action, proceedings, expenses, judgments, penalties, liens, and losses of any nature whatsoever, including fees of accountants, attorneys, or other professionals and all costs associated therewith (collectively "Liabilities"), arising or claimed to arise, directly or indirectly, out of, in connection with, resulting from, or related to any act, failure to act, error, or omission of Indemnitor or any of its officers, agents, servants, employees, subcontractors, materialmen, suppliers or their officers, agents, servants or employees, arising or claimed to arise, directly or indirectly, out of, in connection with, resulting from, or related to the above-referenced contract, agreement, license, or permit (the "Agreement") or the performance or failure to perform any term, provision, covenant, or condition of the Agreement, including this indemnity provision. This indemnity provision is effective regardless of any prior, concurrent, or subsequent active or passive negligence by Indemnitees and shall operate to fully indemnify Indemnitees against any such negligence. This indemnity provision shall survive the termination of the Agreement and is in addition to any other rights or remedies which Indemnitees may have under the law. Payment is not required as a condition precedent to an Indemnitee's right to recover under this indemnity provision, and an entry of judgment against an Indemnitee shall be conclusive in favor of the Indemnitee's right to recover under this indemnity provision. Indemnitor shall pay Indemnitees for any attorney fees and costs incurred in enforcing this indemnification provision. Notwithstanding the foregoing, nothing in this instrument shall be construed to encompass (a) Indemnitees' sole negligence or willful misconduct to the limited extent that the underlying Agreement is subject to Civil Code 2782(a), or (b) the contracting public agency's active negligence to the limited extent that the underlying Agreement is subject to Civil Code 2782(b). This indemnity is effective without reference to the existence or applicability of any insurance coverages which may have been required under the Agreement or any additional insured endorsements which may extend to Indemnitees.

Indemnitor, on behalf of itself and all parties claiming under or through it, hereby waives all rights of subrogation and contribution against the Indemnitees, while acting within the scope of their duties, from all claims, losses and liabilities arising out of or incident to activities or operations performed by or on behalf of the Indemnitor regardless of any prior, concurrent, or subsequent active or passive negligence by the Indemnitees. Accountants, attorneys, or other professionals employed by Indemnitor to defend Indemnitees shall be selected by Indemnitees.

In the event there is more than one person or entity named in the Agreement as an Indemnitor, then all obligations, liabilities, covenants and conditions under this instrument shall be joint and several.

"Indemnitor"

Company/Contractor _____

Name & Title _____

Signature & Date _____

CONTRACT DOCUMENT

PROJECT NO. JN 998 & 999

INSURANCE

CERTIFICATION OF INSURANCE (COI) SHALL BE SUBMITTED BY THE CONTRACTOR

1. **COMMENCEMENT OF WORK**. Contractor shall not be authorized to commence Work under this Contract until it has obtained approved insurance. Before beginning Work hereunder, during the entire period of this Contract, for any extensions hereto, and for periods after the end of this Contract as may be indicated below, Contractor must have and maintain in place not less than the insurance coverages required in this Section at his sole cost and expense. Contractor's insurance shall comply with all items specified by this Contract. Any subcontractors shall be subject to all of the requirements of this Section and Contractor shall be responsible to obtain evidence of insurance from each subcontractor and provide it to City before the subcontractor commences work. Alternatively, Contractor's insurance may cover all subcontractors. The insurance requirements are not intended to and shall not in any manner limit or qualify the liabilities and obligations assumed by Contractor under this Contract.

2. **INSURANCE COMPANY REQUIREMENTS.** All insurance policies used to satisfy the requirements imposed hereunder shall be issued by insurers admitted to do business in the State of California. Insurers shall have a current Best's rating of not less than A-:VII, unless otherwise approved by City.

3. **COVERAGES, LIMITS AND POLICY REQUIREMENTS**. Contractor shall maintain the types of coverages indicated below:

4. **COMPREHENSIVE GENERAL LIABILITY INSURANCE.** A policy of comprehensive general liability insurance written on a per occurrence basis in an amount not less than either one million dollars ($1,000,000) per occurrence or two million dollars ($2,000,000) aggregate.

5. **COMMERCIAL AUTO LIABILITY INSURANCE**. A policy including all coverages provided by and to the extent afforded by Insurance Services Office form CA 0001, ed. 12/93, including Symbol 1 (any auto) with no special limitations affecting City. The minimum auto insurance coverage shall be one million dollars ($1,000,000) combined single limit per accident.

6. **WORKER'S COMPENSATION AND EMPLOYER'S LIABILITY INSURANCE**. A policy which meets all statutory benefit requirements of the Labor Code, or other applicable law, of the State of California. The minimum coverage limits for said insurance shall be no less than one million dollars ($1,000,000) per claim. The policy shall be issued by an insurance company which is admitted to do business in the State of California and shall contain a clause that the policy may not be canceled without thirty (30) days prior written notice, return receipt requested, is mailed to City.

   In accordance with the provisions of section 1860 of the California Labor Code, Contractor's attention is directed to the requirement that in accordance with the provisions of section 3700 of the California Labor Code, Contractor and every subcontractor will be required to secure the payment of compensation of his or her employees, or obtain a certificate of consent to self-insurance by the Director of Industrial Relations in accordance with the requirements of Section 3700 of the California Labor Code.

In accordance with the provisions of section 1861 of the California Labor Code, Contractor shall sign and file with the awarding body the following certification prior to performing any work on the Project:

> "I am aware of the provisions of section 3700 of the Labor Code which require every employer to be insured against liability for worker's compensation or to undertake self-insurance in accordance with the provisions of that code, and I will comply with such provisions before commencing the performance of the work of this contract."

7. **POLICY REQUIREMENTS.** The policies set forth above shall comply with the following, as evidenced by the policies or endorsements to the policies:

   (i) City and its appointed and elected officers, employees, agents and volunteers shall be added as additional insured to the policy as respects liabilities arising out of the performance of any work done under the Contract.

   (ii) The insurer shall agree to provide City with thirty (30) days prior written notice, return receipt requested, of any cancellation, non-renewal or material change in coverage.

   (iii) For any claims with respect to the Project covered by this Contract, Contractor's insurance coverage shall be primary insurance as respects City and its elected and appointed officers, employees, agents and volunteers. Any insurance or self-insurance maintained by City and its elected and appointed officers, employees, agents and volunteers shall be excess of Contractor's insurance and shall not contribute with it.

   (iv) The policy shall apply separately to each insured against whom claim is made or suit is brought except with respect to the limits of the company's liability.

8. **COURSE OF CONSTRUCTION INSURANCE.** Contractor shall provide course of construction insurance covering for "all risks" of loss in the amount of the completed value of the Work. The City shall be named as a loss payee and the insurer shall waive all rights of subrogation against the City. This policy shall be issued by an insurance company which is admitted to do business in the State of California and shall contain a clause that the policy may not be canceled until thirty (30) days written notice, return receipt requested, is mailed to the City. Course of Construction Insurance may be provided for each separate Phase.

9. **ADDITIONAL REQUIREMENTS.** The procuring of required insurance shall not be construed to limit Contractor's liability hereunder nor to fulfill the indemnification provisions and requirements of this Contract. City shall notify Contractor in writing of changes in the insurance requirements. If Contractor does not deposit copies of acceptable insurance policies or endorsements with City incorporating such changes within sixty (60) days of receipt of such notice, Contractor shall be deemed in default hereunder.

10. **DEDUCTIBLES.** Any deductible or self-insured retentions must be declared to and approved by City. Contractor shall guarantee that, at the option of the City, either: the insurer shall eliminate or reduce such deductibles or self-insured retentions with respect to City, its officers, employees, agents and volunteers (with additional premium, if any, to be paid by Contractor); or Contractor shall provide satisfactory financial guarantee for payment of losses and related investigations, claim administration and defense expenses in the amount of any deductibles or self-insured retentions.

11. **VERIFICATION OF COMPLIANCE.** Contractor shall furnish City with the required endorsements attached hereto. All documents are to be received and approved by City before Work commences. Not less than fifteen (15) days prior to the expiration date of any policy of insurance required by this Contract, Contractor shall deliver to City a binder or certificate of insurance with respect to each renewal policy, bearing a notation evidencing payment of the premium therefore, or accompanied by other proof of payment satisfactory to City. Contractor shall provide full copies of any requested policies to City within three (3) days of any such request by City.

12. **TERMINATION FOR LACK OF REQUIRED COVERAGE.** If Contractor, for any reason, fails to have in place, at all times during the term of this Contract, including any extension hereto, all required insurance and coverage, City may immediately obtain such coverage at Contractor's expense and/or terminate this Contract. Contractor shall indemnify, defend and hold harmless City and its elected and appointed officers, employees, agents and volunteers from any claim resulting from failure of either Contractor or any subcontractor to take out or maintain any insurance required by this Contract.

13. **EQUIPMENT COVERAGE**. Any policy or policies of insurance Contractor or his subcontractors elect to carry as insurance against loss or damage to construction equipment and tools or other personal property shall include a provision waiving the insurer's right of subrogation against City.

GENERAL PROVISIONS

STORM DRAIN DEBRIS SCREEN FY 2020/2021 & FY 2021/2022, VARIOUS LOCATIONS JN 998 & 999

PART 1 – GENERAL PROVISIONS

SECTION 1 – GENERAL

1-1 GENERAL. The Standard Specifications for Public Works Construction ("Greenbook") written and promulgated by the Southern California Chapter of the American Public Works Association and the Southern California Districts of the Associated General Contractors of California shall be the Standard Specifications of the City. All work shall conform to the 2021 edition, including supplements of the Standard Specifications, the Special Provisions which supplement or modify the Standard Specifications, and the Standard Drawings as issued by the City (defined herein as "Agency") available at the time bids are opened unless otherwise specified in the Contract Documents.

The above referenced Standard Specifications, Special Provisions and Standard Drawings are hereby made a part of the Contract Documents.

For the convenience of the Contractor, the section and subsection numbering system used in these Special Provisions corresponds to that used in the Standard Specifications.

1-2 TERMS AND DEFINITIONS. Whenever in the Standard Specification the following terms are used, they shall be understood to mean and refer to the following:

(a)	AGENCY	The City of Gardena, a California municipal corporation.
(b)	BOARD	The City Council of the City of Gardena
(c)	CONTRACT DOCUMENTS	Documents including but not limited to the proposal forms, Standard "Greenbook" Specifications, Special Provisions, Technical Provisions, Notice Inviting Bids, Instructions to Bidders, Bonds, Insurance, Contract and all Addenda setting forth any modifications of the documents.
(d)	ENGINEER	The City of Gardena Director of Public Works/City Engineer or his authorized representative.
(e)	BIDDER	An individual, co-partnership, association or corporation submitting a proposal for the work contemplated, acting directly or through a duly authorized representative.
(f)	LEGAL ADDRESS OF CONTRACTOR	The legal address of the Contractor to be the address given on the Contractor's bid and is hereby designated as the place to which all notices, letters or other communications to the Contractor shall be mailed or delivered.
(g)	LABORATORY	An established laboratory approved and authorized by the Engineer for testing materials and work involved in the contract.

1-7 AWARD AND EXECUTION OF THE CONTRACT.

1-7.1 General. The proposal shall be fully executed and submitted on the forms provided by the Agency and shall be enclosed in a sealed envelope marked and addressed as directed in the "Notice Inviting Bids".

If the proposal is made by an individual, it shall be signed and his or her full name and address shall be given; if it is made by a firm it shall be signed with co-partnership name by a general partner thereof, who shall also sign his or her known name, and the name and address of each member of such co-partnership shall be given; if made by a corporation, the name of the corporation shall be signed by its duly authorized officers and attested by the corporate seal.

Bidders are warned against making erasures or alterations of any kind on their Proposal. Proposals which contain omissions, erasures, alterations, conditions or additions not called for may be rejected.

At the time the Contract is awarded by the Agency, the Contractor shall be licensed under the provisions of Chapter 9, Division 3, of the Business and Professions Code of the State of California to do the type of work contemplated in the Contract and shall be skilled and regularly engaged in the general class or type of work required by this Contract.

1-7.2 Contract Bonds. The "Performance Bond" is equivalent to City's "Faithful Performance Bond".

1-7.3 Examination of Plans, Specifications and Project Site. Bidders shall read the specifications, review the drawings and examine the existing facilities to fully understand the project in order to plan for the improvements as shown in the contract, including local condition, uncertainty of weather and all other contingencies.

Bidders shall satisfy themselves by personal examination of the proposed work sites, and by such other means as they may choose as to actual conditions and requirements and as to the accuracy of the quantities stated in the Proposal forms. Information derived from the maps, plans, specifications, profiles, drawings, or from the Engineer/Architect of the record, shall not relieve the bidder of this responsibility, and the interpretation of the data disclosed by borings or other preliminary investigations is not guaranteed nor is any liability assumed by the Agency.

1-7.4 Interpretation of Drawings and Documents. If a prospective bidder is in doubt as to the true meaning or intent of any part of the Contract Documents including the Specifications, or discovers discrepancies in, or omissions from, the Specifications or Drawings, he may submit to the Engineer a written request for an interpretation or a correction thereof. Interpretations or corrections of the Contract Documents including the Specifications and Drawings, shall be made only by addendum duly issued by the Engineer, and a copy of such addendum will be sent by certified mail, postage prepaid, or delivered to each person receiving a set of the Contract Documents whose address is known to the Engineer and such addendum shall be considered a part of and incorporated in the Contract Documents.

1-7.5 Award of Contract. After the Proposals have been publicly opened and read aloud, they will be checked for accuracy and compliance with all provisions as specified herein.

The Agency reserves the right to reject any or all bids and to waive any informality or irregularity in any bid received and to be the sole judge of the merits of the respective bids received.

Bids subsequently shown to be mathematically unbalanced would be rejected as

nonresponsive.

A mathematically unbalanced bid is one containing lump sum or unit bid items which do not reflect reasonable actual costs plus a reasonable proportionate share of the bidder's anticipated profit, overhead costs, and other indirect costs, which he/she anticipates for the performance of the items in question.

"A bid is mathematically unbalanced if the bid is structured on the basis of nominal prices for some work and inflated prices for other work; that is, each element of the bid must carry its proportionate share of the total cost of the work plus profits."

"A bid is materially unbalanced if there is a reasonable doubt that award to the bidder submitting the mathematically unbalanced bid will result in the lowest ultimate cost to the Government. Consequently, a materially unbalanced bid may not be accepted."

Award of the Contract, if it be awarded, will ordinarily be made by the Agency within 30 days after opening of the bids. Award will be made to the lowest responsive responsible bidder.

In selecting the lowest responsive responsible bidder, consideration will be given to the general competency of the bidder for the performance of the work covered by the proposal. To receive favorable consideration, a bidder may be required to present evidence that he has successfully performed similar work of comparable magnitude or submit other evidence satisfactory to the Agency that he or his associates are competent to manage the proposed undertaking and to carry it forward to a successful conclusion. Professional integrity and honesty of purpose shall be essential requirements. A showing of adequate financial resources may be required but will not alone determine whether a bidder is competent to undertake the proposed work.

Only manufacturers or contractors of established reputation, or their duly authorized dealers or agency, having proper facilities for the manufacture of the materials or equipment and for servicing same, or for proper execution of the work called for in the contract, will be considered in making the award.

1-7.6 Execution of Contract. A bidder whose proposal is accepted shall properly sign a written contract with the Agency on the form attached hereto and return said contract together with good and approved bonds and insurance certificates as required by the Contract Documents **within twenty-one (21) calendar days** from the date of the mailing of a notice from the Agency to the bidder, according to the address given by him, of acceptance of his proposal.

Contract bonds and certificates of insurance, if required, shall be filed in all instances before delivering any equipment, materials, or performing any work under the contract; also before any purchase order shall be issued. An executed Power of Attorney form shall be submitted with all contract bonds herein specified.

If a bidder whose proposal is accepted fails or refuses to enter into a contract as herein provided, or to conform to any stipulated requirement in connection therewith, the money represented by his check or bidder's bond shall be refunded less the difference between the low bid and the bid of the bidder with whom the Agency enters into an agreement in accordance with the provisions of the Public Contracts Code Section 20174. At the discretion of the Agency, an award may be made to the bidder whose proposal is next most acceptable to the Agency, and such bidder and his surety shall fulfill every stipulation embraced herein as if he were the party to whom the first award was made.

A corporation to which an award is made may be required before the contract is finally signed to furnish evidence of its corporate existence, of its right to do business in California and of the authority of the officer signing the contract and bonds for the corporation to so sign.

1-7.7 Return of Proposal and Guarantee. The check or bond of a bidder to whom the contract has been awarded will be returned to him after all of the acts, for the performance of which said security is required, have been fully performed. The checks or bid bonds of the second and third lowest bidders will be returned when the bidder to whom the contract has been awarded has properly executed all of the required Contract Documents. Check or bid bonds of other bidders will be returned when their proposals are rejected or in any event at the expiration of forty-five (45) days from the date of opening bids.

1-7.8 Precedence of Contract Documents. The order of precedence of contract document shall be:

FIRST	Requirements of law, including the Code and Ordinances of the City of Gardena.
SECOND	Permits from other agencies as may be required by law.
THIRD	Permits from City of Gardena Departments as may be required by law or ordinance.
FOURTH	The Contract.
FIFTH	The Bid Proposal.
SIXTH	Addenda.
SEVENTH	Notice Inviting Bids.
EIGHTH	Instructions to Bidders.
NINTH	Technical Provisions.
TENTH	Plans.
ELEVENTH	General Provisions of the Standard Specifications.
TWELFTH	Standard Plans.
THIRTEENTH	Standard Specifications for Public Works Construction (current edition).
FOURTEENTH	Caltrans Standard Plans and Specifications.
FIFTEENTH	Reference Specifications.

Change orders, supplemental agreements and approved revisions to Plans and Specifications will take precedence over documents listed above, except those listed as FIRST, SECOND and THIRD. Detailed plans shall have precedence over general plans.

SECTION 2 – SCOPE OF THE WORK

2-2 PERMITS. The Contractor will obtain, at no cost to the Agency, all permits necessary to perform the work on streets, highways, railways or other rights-of-ways. The Contractor shall obtain and pay for all costs incurred for permits necessitated by its operations such as, but not

limited to those permits required for night work, overload, blasting and demolition. For private contracts, the Contractor shall obtain all permits incidental to the work or made necessary by its operations, and pay all costs incurred by the permit requirements.

Contractor shall be required to obtain and pay for the Los Angeles County Flood Construction Permit (Case #FCDP2022000237/Invoice #00345129). Los Angeles County permit contacts are listed below.

Name	Phone Number	Email Address
Eda P. Garcia	(626) 458-4937	egarcia@dpw.lacounty.gov
Joseph Min	(626) 979-5414	jomin@dpw.lacounty.gov

The Contractor and each subcontractor employed upon the work must have or obtain a valid City of Gardena Business License in accordance with the provisions of the Gardena Municipal Code.

2.10 DISPUTED WORK.

2.10.1 Retention of Imperfect Work. If any portion of the work done or materials furnished under the contract proves defective or not in accordance with the specifications and contract drawings, and if the imperfection in the same is not of sufficient magnitude or importance to make the work dangerous or undesirable, or if the removal of such work is impracticable or will create conditions which are dangerous or undesirable in the opinion of the Engineer, the Engineer shall have the right and authority to retain the work instead of requiring it to be removed and reconstructed, but he shall make deductions therefor in the payment of the contract item due Contractor as may be just and reasonable.

2-11. DISPUTE RESOLUTION.

2-11.1 Requests for Contract Adjustments and Relief. If either Contractor or the Agency believes that it is entitled to relief against the other for any event arising out of or related to the work or Project, such party shall provide written notice to the other party of the basis for its claim for relief. Such notice shall, if possible, be made prior to incurring any cost or expense and in accordance with any specific notice requirements contained in the applicable sections of this Contract.

In the absence of any specific notice requirement, written notice shall be given within a reasonable time, not to exceed fourteen (14) days, after the occurrence giving rise to the claim for relief or after the claiming party reasonably should have recognized the event or condition giving rise to the request, whichever is later. Such notice shall include sufficient information to advise the other party of the circumstances giving rise to the claim for relief, the specific contractual adjustment or relief requested and the basis of such request.

2-11.2 Dispute Avoidance and Resolution. The parties are fully committed to working with each other throughout the Project and agree to communicate regularly with each other at all times so as to avoid or minimize disputes or disagreements. If disputes or disagreements do arise, Contractor and the Agency each commit to resolving such disputes or disagreements in an amicable, professional and expeditious manner so as to avoid unnecessary losses, delays and disruptions to the work under the Contract.

Contractor and the Agency will first attempt to resolve disputes or disagreements at the field level through discussions between Contractor's Representative and the Engineer.

If a dispute or disagreement cannot be resolved through the Contractor's Representative and

the Engineer, Contractor's Chief Executive Officer or similar senior representative and the Gardena City Manager, or designee, upon the request of the other party, shall meet as soon as conveniently possible, but in no case later than twenty (20) days after such a request is made, to attempt to resolve such dispute or disagreement. Prior to any meeting between the parties' senior representatives, the parties will exchange relevant information that will assist the parties in resolving their dispute or disagreement.

If, after meeting, the senior representatives determine that the dispute or disagreement cannot be resolved on terms satisfactory to both parties, the parties may submit the dispute to binding or non-binding mediation. The mediation shall be conducted in any manner and by any person or mediation association mutually acceptable to the parties.

2-11.3 Arbitration. Any claims, disputes or controversies between the parties arising out of or relating to the Contract, or the breach thereof, which have not been resolved in accordance with the procedures set forth in Section 9-4.2 above may be decided by binding or non-binding arbitration. The arbitration shall be conducted in any manner and by any person or arbitration association mutually acceptable to the parties.

2-11.4 Claims Disputes. Any claims of Contractor, as "claims" are defined in California Public Contract Code Section 9204 shall be processed in accordance with that section. Section 9204 provides in relevant part that upon receiving a claim from a contractor, together with reasonable documentation to support the claim, a contracting public entity shall conduct a reasonable review of the claim and, within a period not to exceed 45 days [except as otherwise provided in Section 9204], shall provide the claimant a written statement identifying what portion of the claim is disputed and what portion is undisputed.

Any payment due on an undisputed portion of the claim shall be processed and made within 60 days after the public entity issues its written statement. If the public entity fails to issue a written statement, Section 9-4.3 shall apply. If the contractor disputes the public entity's written response, or if the public entity fails to respond to a claim within the time prescribed, the contractor may demand in writing an informal conference to meet and confer for settlement of the issues in dispute.

Upon receipt of a demand in writing sent by registered mail or certified mail, return receipt requested, the public entity shall schedule a meet and confer conference within 30 days for settlement of the dispute. Within 10 business days following the conclusion of the meet and confer conference, if the claim or any portion of the claim remains in dispute, the public entity shall provide the claimant a written statement identifying the portion of the claim that remains in dispute and the portion that is undisputed.

Any payment due on an undisputed portion of the claim shall be processed and made within 60 days after the public entity issues its written statement. Any disputed portion of the claim of the claim, as identified by the contractor in writing, shall be submitted to nonbinding mediation, with the public entity and the contractor sharing the associated costs equally. The public entity and contractor shall mutually agree to a mediator within 10 business days after the disputed portion of the claim has been identified in writing. If the parties cannot agree upon a mediator, each party shall select a mediator and those mediators shall select a qualified neutral third party to mediate with regard to the disputed portion of the claim. Each party shall bear the fees and costs charged by its respective mediator in connection with the selection of the neutral mediator. If mediation is unsuccessful, the parts of the claim remaining in dispute shall be subject to other applicable procedures.

2-13 DRAWINGS AND SPECIFICATIONS ("RECORD" DRAWINGS). At all times, the Contractor shall maintain at the project a "Record" set of Drawings and Specifications to include all executed addenda, change orders, and field orders.

Prior to each progress payment the Contractor shall deliver to the Engineer, a set of contract drawings with all applicable “as constructed” notes placed/recorded thereon. Failure to provide “as constructed” plans will cause progress payment to be withheld until information is provided to City.

After completion of the work and before final payment, the Contractor shall deliver to the Engineer a complete set of contract drawings with all applicable “as constructed” noted placed/record thereon. The final form and detail of these as constructed plans are subject to the acceptance of the Engineer.

2-14 MARKING REMOVAL. All markings placed by the Contractor, City, and Underground Service Alert (USA) during construction shall be removed at the completion of the work. These markings shall include, but not limited to, paint, stakes, and metal tags.

All cost associated with removal of markings shall be included in the bid prices for the applicable bid items. Failure of the Contractor to remove these markings shall be cause for the City to do the work and withhold the costs from the Contractor’s final payment.

SECTION 3 – CONTROL OF THE WORK

3-5 INSPECTION. Inspection shall be made once a day for areas ready for inspection. Areas or items that fail inspection or that are not ready for inspection shall be rescheduled by the contractor.

Inspection of the work shall not relieve the contractor of the obligation to fulfill all conditions and requirements of the contract.

3-6 THE CONTRACTOR’S REPRESENTATIVE. The Contractor shall furnish the Engineer with the name, address and cell/ business/home telephone numbers of the person responsible for the maintenance of barricades, traffic control signs, lights and other safety devices.

3-10 SURVEYING.

3-10.3 Line and Grade. Unless otherwise provided in the Technical Provisions, establishing lines and grades for construction shall be the responsibility of the Contractor, with the following provisions:

All work under this contract shall be built in accordance with the lines and grades shown on the plans. Field survey for establishing these, and for the control of construction, shall be the responsibility of the Contractor. All such surveys, including construction staking, shall be performed on all items ordinarily requiring grade and alignment, at intervals normally accepted by the agencies and trade involved.

The Contractor shall provide a copy of the office calculations and grade sheets to the Agency’s Inspector. The Contractor shall be responsible for any error in the finished work, and shall notify the Engineer within 24 hours of any discrepancies or design errors discovered during staking.

Unless a separate bid item is provided, the payment for surveying, construction staking, professional services, office calculations, furnishing all labor, materials, equipment, tools and incidentals, and for doing all work involved shall be considered as included in the various items of work, and no additional compensation will be allowed therefor.

3-10.4 Permanent Survey Markers. The Contractor is required to locate and tie out survey

monuments in the project area prior to construction involving street and highways, or City public right of way and to file with the County Surveyor a Corner Record of any such work. Prior to final payment and the issuance of a completion certificate, the Contractor is required to file a Corner Record for survey monumentation that is replaced. All such survey work shall be performed under the supervision of a California licensed Land Surveyor or a Civil Engineer authorized to perform such work.

The Contractor shall provide the Agency a copy of the office calculations and documents submitted to the County for filing in connection with the aforementioned work.

The payment for surveying, related professional services, office calculation, furnishing all labor, materials, equipment, tools and incidentals, and for doing all work involved shall be considered as included in the various items of work, and no additional compensation will be allowed therefor.

3-12 WORK SITE MAINTENANCE.

3-12.1 General. The Contractor shall keep the work site clean and free from rubbish and debris. The Contractor shall abate dust nuisance by cleaning, sweeping and sprinkling with water in keeping with the AQMD and NPDES requirements. Debris, soil or other matter shall not be washed into storm drains but shall be collected and disposed of in a legal, responsible manner. The construction area shall be cleaned with a power sweeper at the end of every workday and when deemed necessary by the Engineer.

The Contractor shall maintain drainage within and through the work areas. Earth dams will not be permitted in paved areas. Use temporary sandbags to control the site perimeter. At the completion of the project sandbags shall become the property of the City of Gardena and shall be remain in place.

The Contractor shall not spill on haul routes. Any such spillage shall be removed immediately and the area cleaned.

Stockpiling of construction materials or debris on City right-of-way shall be in accordance with the NPDES permit and shall be approved by the inspector. At the completion of work, the Contractor shall thoroughly clean all work areas.

3-12.2 Air Pollution and Surface Maintenance Control. The Contractor shall obtain a construction water meter from Golden State Water including required deposit and fees. The Contractor shall pay for the water used, at the current water rates. All arrangements for construction water shall be made by contractor with Golden State Water at Contractor expense.

3-12.4. Storage of Equipment and Material.

3-12.4.1 General. All costs associated with the disposal of all excavated or demolition materials, including any gate fees, shall be paid by the Contractor. These costs shall be included in the bid price for the applicable bid items.

Prior to any excavated or demolition material being removed from the construction site the Contractor shall notify the City as to the hauling route and destination for disposal. If the location for disposal is other than a county landfill then the Contractor shall provide the City with written permission and release of liability for the City from the owner of the property where the material will be deposited.

<u>The City has an exclusive agreement with Waste Resources, Inc. and no other firm may provide bulk trash bins in the event the work requires this service</u>.

3-12.4.2 Storage in Public Streets. Construction equipment shall not be stored at the construction site, any public street or publicly owned facilities without approval of the City. Contractor shall store equipment at a contractor's rental yard.

All excavated material that is to be hauled to and disposed of at a County landfill site by the Contractor is subject to a County gate fee based on tonnage.

3-12.5.4 Protection and Restoration of Existing Improvements. Any facilities, structures, water lines, landscaping, surfaces, signs, pavement markings, painted curbs, house numbers, etc., which are damaged during construction shall be restored to the satisfaction of the City. Damaged water lines shall be repaired immediately at no additional cost to the city.

3-12.5.5 Access to Private Property. The Contractor shall be aware that business and residential access must be maintained at all times. The Contractor shall schedule operations to minimize interference with access to private property.

The main access way to any business or home shall not be completely blocked for more than one four-hour period a day except blockage shall be limited to one twenty-four (24) hour period when concrete is poured.

Temporary access ways shall be provided from the street to the main access way of all businesses and homes by use of traffic rated steel plates or any other method approved by the city.

Payment for this item shall be included in the applicable contract work item.

3-13 COMPLETION, ACEPTANCE, AND WARRANTY.

3-13.3 Warranty. In addition to the guarantees as required in Section 1-7.2 and 3-13.3 of the Standard Specifications, the Faithful Performance Bond shall remain in full force and effect for a period of one year after acceptance of the work by the Agency to insure that defects, which may appear within said period, will be repaired, replaced, or corrected by the Contractor, at his own cost and expense, to the satisfaction of the Engineer within thirty (30) days after written notice thereof by the Agency.

SECTION 4 – CONTROL OF MATERIAL

4-1 GENERAL.

4-1.1 Warranty of Title. No materials, supplies or equipment for the work under this Contract shall be purchased subject to any chattel mortgage or under a conditional sale contract or other agreement by which an interest therein or any part thereof is retained by the seller or supplier.

The Contractor warrants clear and good title to all materials, supplies and equipment installed and incorporated in the work, and agrees upon completion of all work to deliver the premises, together with all improvements and appurtenances constructed or placed thereon by him to the Agency free from any claims, liens, encumbrances or charges, and further agrees that neither he nor any person, firm or corporation furnishing any material or labor for work covered by the Contract shall have any right to a lien upon the premises or any improvement or appurtenance thereon; provided, that this shall not preclude the Contractor from installing metering devices or other equipment of utility companies the title of which is commonly retained by the utility company. Nothing contained in this section, however, shall defeat or impair the right of such persons furnishing materials or labor under any bond given by the Contractor for their

protection, or any right under any law permitting such persons to look to funds due the Contractor, which are in the hands of the Agency.

The provisions of this section shall be inserted in all subcontractor's and material contracts, and notice of its provisions shall be given to all persons furnishing materials for the work when no formal contract is entered into regarding such materials.

SECTION 5 – LEGAL RELATIONS AND RESPONSIBLITIES

5-4 INSURANCE. In lieu of Section 5-4 of the Standard Specifications, refer to the City Contract Documents Section, CD-10, for detail requirements.

5-5 ANTITRUST CLAIMS. By entry into this Contract, Contractor hereby acknowledges the terms of Section 7103.5 of the Public Contract Code and hereby offers and agrees to assign to the Agency all rights, title and interest in all causes of action it may have as outlined above.

5-7 SAFETY.

5-7.4 Hazardous Substances. As required by Public Contract Code Section 7104, if this Contract involves digging trenches or other excavations that extend deeper than four (4) feet below the surface, Contractor shall promptly, and prior to disturbance of any conditions, notify the Agency of: (1) any material discovered in excavation that Contractor believes to be a hazardous waste that is required to be removed to a Class I, Class II or Class III disposal site; (2) subsurface or latent physical conditions at the site differing from those indicated by the Agency; and (3) unknown physical conditions of an unusual nature at the site, significantly different from those ordinarily encountered in such contract work. Upon notification, the Agency shall promptly investigate the conditions to determine whether a change order is appropriate. In the event of a dispute, Contractor shall not be excused from any scheduled completion date and shall proceed with all work to be performed under the Contract but shall retain all rights provided by the Contract and by law for making protests and resolving the dispute.

5-7.4.1 Edison Energized Conductors. Contractor hereby promises and agrees that in the performance of the work specified in this Contract, it will employ and utilized only qualified persons, as hereinafter defined, to work in proximity to Edison's secondary, primary and transmission facilities. The term "qualified person" is defined in Title 8, California Administrative Code, Section 2700, as follows:

> "Qualified Person: A person who by reason of experience or instruction is familiar with the operation to be performed and the hazards involved."
>
> Contractor further promises and agrees that the provisions of this section shall be and are binding upon any subcontractor or subcontractors that may be retained by it, and that Contractor shall take such steps as are necessary to assure compliance by said subcontractor or subcontractors with the requirements of this section.

5-7.4.2 Emergency Provisions. Unusual conditions may arise on the work which will require that immediate and unusual provision be made to protect the public from danger or loss or damage to life and property, due directly or indirectly to the prosecution of the work, and it is part of the service required of the Contractor to make such provisions and to furnish such protection.

Whenever, in the opinion of the Agency, an emergency exists of which the Agency is aware and against which the Contractor has not taken sufficient precaution for the safety of the public or the protection of utilities or of adjacent structures or property which may be injured by the

progress of construction; and whenever, in the opinion of the Agency, immediate action shall be considered necessary in order to protect public or private personnel or property interests, or prevent likely loss of human life or damage on account of the operations under the Contract, then in that event the Agency may provide suitable protection to said interests by causing such work to be done and material to be furnished, as in the opinion of the Agency may seem reasonable and necessary, all at the expense of the Contractor.

SECTION 6 – PROSECUTION AND PROGRESS OF THE WORK

6-1 CONSTRUCTION SCHEDULE AND COMMENCEMENT OF THE WORK

6-1.1 Construction Schedule. The Contractor's proposed construction schedule shall be submitted to the Engineer within fourteen (14) calendar days after the date of the contract execution. The schedule shall be supported by written statements from each supplier of materials or equipment indicating that all orders have been placed and acknowledged and setting forth the dates that each item will be delivered.

The Contractor shall include in his bid all costs to perform the work under this contract in stages. The Contractor shall begin and complete work in each stage prior to starting work in subsequent stages unless previous permission is obtained from the Engineer. The contractor shall stage the work to allow parking on the next adjacent streets. Restricting parking on multiple adjoining streets shall require approval of the engineer.

6-1.2 Commencement of the Work. City may establish a Notice to Proceed (NTP) date no later than thirty (30) calendar days after the date of the contract execution. Prior to issuing the Notice to Proceed, the Engineer will schedule a preconstruction meeting with the Contractor to review the proposed construction schedule and delivery dates, arrange utility coordination, discuss construction methods and clarify inspection procedures.

The names, addresses and telephone numbers of the Contractor and subcontractors, or their representatives, shall be filed with the Public Works Manager and the County Sheriff's Department or the City Police Department prior to beginning work.

The Contractor shall also notify the City of Gardena and the owners of all utilities and substructures within the Project area not less than 48 hours prior to starting construction. The following utility companies list of names and telephone numbers is intended for the convenience of the contractor and is not guaranteed to be complete or correct:

COMPANY	***CONTACT***	***TELEPHONE NO.***
Southern California Edison	Tricia Miller	626.533.0640
Southern California Gas	Melissa Fukunaga: Tech Services Planning: Attn - Lead Planner	213.231.7281
AT&T	Terence Little	626.817.4252
	Raymond Dover	310.515.4257
Gardena Police	Dispatch	310.3237911
L.A. County Fire Dept.		310.323.7911
Time Warner Communications	Arturo Fernandez	310.750.9099
Crown Castle	Hector Aguilera	951.454.5111
Waste Resources of Gardena	Lorena Rodriguez	310.366.7600
Golden State Water Co.	Conde Ventura	310.436.6950 x107

	Joseph Salcido	310.660.0320 x101
L.A. County Flood Control	Daryll Chenoweth	626.458.3129
L.A. Sanitation District	Jon Ganz	562.908.4288
Metropolitan Water District	Civil Eng. Substructures Section	213.217.7059
Chevron Pipeline	Dave Zerler	310.669.4014
Underground Service Alert		800.422.4133

The Contractor shall submit periodic Progress reports to the Engineer by the tenth day of each month. The report shall include an updated Construction Schedule. Any deviations from the original schedule shall be explained. Progress payments will be withheld pending receipt of any outstanding reports.

6-1.3 Working Day. The Contractor's working hours shall be limited to the hours between 7:30 A.M. and 4:30 P.M., Monday through Friday except holidays. Work which will cause loud or disruptive noise to adjacent residents and "No Parking" enforcement shall not begin prior to 8:00 a.m. Deviation from normal working hours will not be allowed unless written permission has been duly obtained beforehand from the office of the City Engineer. The Contractor shall provide adequate light for proper prosecution of the work, for the safety of the workmen and the public, and for proper inspection.

If the Contractor works beyond the allowed working hours without prior written approval from the Engineer, the Contractor may be charged Five Hundred ($500) for each occurrence as required by the Engineer. The amount will be deducted from a progress payment or bond.

Contractor hereby acknowledges and shall be required to comply with the provisions of California Labor Code Section 1810 et seq. According to those sections, eight (8) hours of labor shall constitute a legal day's work. Contractor shall pay to the Agency a penalty of Twenty-Five Dollars ($25.00) for each worker employed in the execution of this Contract by Contractor, or by any Subcontractor, for each calendar day during which such worker is required or permitted to work more than eight (8) hours in any calendar day or forty (40) hours in any one (1) calendar week, except when payment for overtime is made at not less than one and one-half (1-1/2) times the basic rate for that worker.

In the event of either a requested or emergency deviation, inspection service fees will be charged against the Contractor. The service fees will be calculated at overtime rates including benefits, overhead and travel time. The service fees will be deducted from any amounts due to the Contractor.

6-1.4 Notice and Service Thereof. Any notice required or given by one party to the other under the contract shall be in writing and shall be dated and signed by the party giving such notice or by a duly authorized representative of such party. Any such notice shall not be effective for any purpose whatever unless served in the following manner:

Notice shall be given to the Agency by personal delivery thereof to the City of Gardena Engineer or by depositing the same in the United States mail enclosed in a sealed envelope, registered and with postage prepaid, addressed to:

Public Works Department
City of Gardena
1717 W. 162nd Street
Gardena, CA 90247-3778

Notice shall be given to the Contractor by personal delivery thereof to said Contractor or to his authorized representative at the site of the project, or by depositing the same in the United States mail, enclosed in a sealed envelope addressed to said Contractor at the address established for the conduct of the work under this Contract, postage prepaid and registered.

Notice shall be given to the Surety, or any other person, by personal delivery to said Surety or other person, or by depositing the same in the United States Mail, enclosed in a sealed envelope addressed to such Surety or persons at the address of said Surety or persons last communicated to the party giving the notice, postage prepaid and registered.

Notification of Property Owners and Tenants - The Contractor shall notify each property owner and/or tenant in the project area in writing five (5) working days prior to the start of construction. If pedestrian or vehicular access to private property is to be blocked, the Contractor shall again notify each property owner and/or tenant in writing five (5) working days prior to construction activities. The Contractor shall provide additional notices when a lapse time occurs during each phase/segment work.

The written notice shall be submitted to the Engineer for approval prior to being delivered.

6-2 PROSECUTION OF THE WORK.

6-2.1 Contractor's Responsibility for Work. Until the formal acceptance of the work by the Agency, the Contractor shall have the charge and care thereof and shall, subject to the insurance protection furnished in accordance with the Section 1-7.6 and 5-4 hereof, bear the risk of accident, loss or damage to any part thereof by action of the elements or from any other cause, whether arising from the execution or from the non-execution of the work. The Contractor shall rebuild, repair, restore and otherwise correct damages to any portion of the work occasioned by any of the above causes before its acceptance.

In case of suspension of work from any cause whatever, the Contractor shall be responsible for all materials and the proper temporary storage thereof.

6-3 TIME OF COMPLETION.

6-3.1 General. The contract time shall begin per the City's written notification. Work must be completed within working days specified for the project. In addition, the Contractor shall notify the City 24 hours in advance of the actual commencement of work.

No work shall be undertaken during the City's holiday closures. It is the Contractor's responsibility to determine the City's closure dates.

6-9 LIQUDATED DAMAGES. The amount of liquidated damages is hereby amended to **$800** for each consecutive calendar day.

SECTION 7 – MEASUREMENT AND PAYMENT

7-1 MEASUREMENT OF QUANTITIES FOR UNIT PRICE WORK.

7-1.2 Method of Measure. The quantities shown on the Bid Schedule are approximate only. The Contractor will be paid for the actual quantities of work based on approved field measurements as provided for in these Specifications. The City reserves the right to increase or decrease the amount of any item or portion of work to be performed or materials furnished, or to delete any item, in

accordance with the Specifications. Additional bid item work shall be completed within the total working days in these specifications. Additional working days maybe allowed with the approval of the engineer.

7-3 PAYMENT.

7-3.2 Partial and Final Payment. The closure date for periodic progress payments will be the twenty-fifth day of each month. Authorization to pay is commonly received on the tenth day of the following month. However, payments will be withheld pending receipt of any outstanding reports required by the Contract Documents.

7-3.3 Delivered Materials. The City will NOT honor or make any progress payments for materials ordered and delivered to the job site by the Contractor unless prior approval is obtained from the Engineer.

7-4 PAYMENT FOR EXTRA WORK.

7-4.3 EXTRA WORK. When work is performed on a "time and materials" basis, the following percentages shall be added to the Contractor's cost and shall constitute the markup for all overhead and profits:

1) Labor 20
2) Materials 15
3) Equipment Rental.....15
4) Other Items and Expenditures.....15

To the sum of the costs and markups provided for in this section, 1 percent shall be added as compensation for bonding.

When all or any part of the extra work is performed by a Subcontractor, the markup established above shall be applied to the Subcontractor's actual cost of such work. A markup of 10 percent on the first $5,000 of the subcontracted portion of the extra work and a markup of 5 percent on work added in excess of $5,000 of the subcontracted portion of the extra work may be added by the Contractor.

SECTION 8 – FACILITIES FOR AGENCY PERSONNEL

8-2 FIELD OFFICE FACILITIES. The Contractor shall provide the class of field office indicated below:

□ Class "A" □ Class "B" □ Class "C"

In the event none of the boxes are marked above, no specific field office will be required, and the use therefor of any field office will be at the Contractor's discretion. The location of any field office shall be as provided on the plans, in these Specifications or as designated by the Engineer.

END OF GENERAL PROVISIONS

TECHNICAL PROVISIONS

PREFACE: All work and materials shall conform to the "Standard Specification for Public Works Construction", 2021 edition, except as modified by the contract and these Technical Provisions.

Incidental Work - All work and materials required by the plans and specifications, and not specifically listed in the bid schedule items of work, shall be considered incidental and no additional payment shall be made therefore. Incidental items shall include, but not be limited to, mobilization; implementation of the SWPPP and Best Management Practices for the protection of storm drain structures; adjusting utility access covers to grade; saw cutting; excavation and disposal of materials; survey; traffic control and coordination of utilities.

PART 1 – GENERAL PROVISIONS

Section 9 “Mobilization,” is hereby added to the Standard Specifications.

SECTION 9 – MOBILIZATION

9-1. MOBILIZATION

9-1.1 General. Subsection 7-3.4 “Mobilization,” of the Standard Specifications is hereby deleted.

Mobilization shall consist of preparatory work and operations, including but not limited to, those necessary for the movement of personnel, equipment, supplies, and incidentals to the project site; for the establishment of all offices, buildings, construction yards, sanitary facilities, and any other facilities necessary for work on the project; pulling of all required permits including Los Angeles County Department of Public Works permit for the installation of connector pipe screens; providing required insurance coverages, and for all other work and operations which must be performed or costs incurred prior to beginning work on the various contract items on the project site.

Demobilization shall consist of all work and operations necessary to perform final clean-up, including but not limited to, those necessary for the movement of personnel, equipment, supplies, and incidentals from the project site, remove all offices, and other facilities that were necessary for work on the project, and for other work that must be performed or costs incurred prior to final acceptance of the work.

Mobilization is deemed to include all aspects of mobilization and demobilization work occurring during the life of the project for any reason.

The Contractor shall furnish equipment sufficient to execute the work within the period allowed in the approved schedule.

The Contractor shall promptly demobilize equipment no longer needed to perform the work.

All facilities required for Contractor’s use shall be furnished and maintained by the Contractor at the locations designated on the Contract Drawings or as directed by the Engineer.

The Contractor shall furnish and maintain adequate number of portable sanitary facilities throughout the project duration for use by their own personnel and Subcontractors.

The security of all materials and equipment in the Contractor storage area shall be the responsibility of the Contractor. The City of Gardena is not liable for any theft or damage to materials or equipment in Contractor's storage area.

9-1.2 Payment.

Payment for MOBILIZATION, cost of all bonds and insurance policies, and all costs incurred prior to beginning work shall be included under other items of work.

PART 2 – CONSTRUCTION MATERIALS

SECTION 218 – CONNECTOR PIPE SCREEN

218-1 GENERAL.

Connector pipe screen shall be Model USW-1M1 and USW-1M2 manufactured by United Storm Water, Inc. (626) 961-9326, unitedstormwater.com or approved equal and meet the requirements as shown in Appendices A & B. Manufacturer shall be limited to the Los Angeles County approved vendor list. See Appendix C.

PART 3 – CONSTRUCTION METHODS

SECTION 318 – CONNECTOR PIPE SCREEN INSTALLATION

318-1 GENERAL.

Connector pipe screen installation shall meet the requirements as shown in Appendices A & B.

318-2 PAYMENT.

Payment for INSTALL CONNECTOR PIPE SCREEN IN EXISTING CATCH BASIN shall be made at the contract unit price bid per EACH and shall include full compensation for furnishing all labor, materials, tools, equipment, incidentals, protecting existing improvements within and adjacent to the work, appurtenant work required to complete the work and no additional compensation will be allowed therefore.

PART 6 - TEMPORARY TRAFFIC CONTROL

SECTION 600 - ACCESS

600-1 GENERAL.

600-1.1 Public Convenience and Safety Access. The Contractor shall provide temporary "No Parking" and all other signs which are necessary for the safe and orderly conduct of vehicular traffic as directed by the Engineer and as specified herein. Contractor shall also provide an approval barricaded area in the parking lane for pedestrian traffic during such time as the parkway is unfit to be used for pedestrian traffic.

At such times as driveways are inaccessible due to the Contractor's work, they shall be blocked by two (2) Class II barricades or one (1) Class II barricade and two (2) delineators. Driveways that are ramped or planked for temporary access shall be provided with a barricade or delineator at each side. The Contractor shall give 24-hour notice to affected property owners prior to blocking any driveway.

The Contractor shall provide access for refuse collection on the regularly scheduled days. He shall also facilitate or assist in the collection where such work is hampered by his operations.

600-1.2 Street Closures, Detours, and Barricades. The Contractor shall not close any street within the City of Gardena without first obtaining the approval of the Engineer. Barricading, traffic control and detour diagrams in connection with street closures shall be submitted by the contractor as required by the Engineer.

The Contractor shall provide and install barricades, delineators, warning devices and construction signs in accordance with the California Manual of Temporary Traffic Controls or W.A.T.C.H. Handbook. During adverse weather or unusual traffic or working conditions additional traffic devices shall be placed as directed by the Engineer. All traffic signs and devices shall also conform to the California Manual of Temporary Traffic Controls or W.A.T.C.H. Handbook.

The Contractor shall provide and maintain Type II barricades along excavation edges parallel to the flow of traffic at a maximum spacing of twenty-five feet. Type II barricades mounted with flashers shall be installed around work areas in parkways. Type II barricades shall have alternating reflective orange and reflective white stripes at an angle of 45 degrees. The strip width shall be in accordance with Table 5-1 "Barricade Characteristics" "Manual of Traffic Controls for Construction and Maintenance Work Zones".

During paving operations, barricades may be supplemented with minimum size eighteen-inch high traffic cones and delineators such that spacing between barricades and/or cones or delineators is no greater than twenty feet. Traffic cones and delineators used within State right-of-way shall be a minimum size of twenty-eight inches high. At all access points such as intersecting streets, alleys and driveways, barricades and/or cones shall be provided at five-foot intervals so as to prevent vehicular access to the paving area. Where access from an intersecting street is prohibited, a "Road Closed" sign shall be provided at the nearest prior intersection. "No Left Turn" signs shall be provided wherever required by the Engineer.

When one-way access from a side street or alley is permitted, barricades and cones shall be provided at five-foot intervals for a distance of fifty feet on either side of the centerline of the intersecting street, or alley.

Should the Contractor fail to furnish a sufficient number of traffic and/or pedestrian safety devices, the Agency will place such necessary items and the Contractor shall be liable to the Agency for providing such devices in accordance with the following provisions:

1. For placing of barricades: $5.00 per barricade for the first day or any part thereof and $2.00 per barricade, per day, for each day thereafter or any part thereof. For flashers: $2.50 per flasher for the first day or any part thereof and $1.00 per flasher, per day, for each day thereafter or any part thereof. For traffic cones: $1.00 per cone for each day or any part thereof.

2. In the event that the services of the Agency are required between the hours of 5:00 P.M. and 8:00 A.M., during the normal week or at any time on Saturday,

Sunday or a Agency holiday, there shall be an additional charge to the above set forth minimums of $188.00 for each service trip required.

Contractor shall relocate, preserve and maintain the visibility of all existing signs within the project limits which affect the flow of traffic, as directed by the Engineer. Any signs which are damaged or found to be missing during the course of construction shall be replaced by the Contractor at his expense as directed by the Engineer. All other signs that interfere with the course of work and are not necessary for the safe flow of traffic will be removed and replaced by the Agency. Traffic control signs include Stop Signs, Speed Limit, Parking Restrictions and other regulatory signs.

SECTION 601 – TEMPORARY TRAFFIC CONTROL FOR CONSTRUCTION AND MAINTENANCE WORK ZONES

601-1 GENERAL. A minimum of two (2) lanes (one lane in each direction) shall be maintained at all times for a continuous flow of traffic, except as otherwise approved by the Engineer.

Lane closures shall be allowed between 8:00a.m. and 4:00p.m. only. No traveled lane shall be closed overnight without prior City approval. Access to private property shall be maintained at all times.

"Temporary No Parking" signs shall be posted no more than 100 feet apart at least 72 hours prior to work. The signs shall be mounted on either 1” x 2” X 3’ high wood stakes, Type II barricades, or 39-inch high delineators. Signs shall not be po sted on trees, traffic signal poles, utility poles, streetlights, or any other street furniture. Signs shall be professionally made of moisture-resistant, heavy duty cardboard or other approved material. "Temporary No Parking" signs shall be maintained by the contractor at all times and shall be approved by the Engineer prior to posting. Cover existing street signs as directed by the Engineer.

"Temporary No Parking" signs shall be implemented for one week only (M-F) at a time. Signs shall be removed and reposted each week as needed and approved by the City.

DURING PAVING OPERATIONS, THE CONTRACTOR SHALL PROVIDE INDIVIDUALS AND EQUIPMENT DESIGNATED TO PERFORM AND MAINTAIN TRAFFIC CONTROL ONLY. The Contractor shall furnish, place and maintain all temporary traffic control devices required for the safe and orderly flow of vehicular and pedestrian traffic during construction. All Traffic control shall conform to the California Manual of Temporary Traffic Controls (California M.U.T.C.D.) or Work Area Traffic Control Handbook (W.A.T.C.H. Handbook).

If traffic control measures are not in conformance with these provisions, the project shall be stopped until conformance is attained to the satisfaction of the Engineer.

At locations where excavations are left open overnight, flashing barricades shall be placed along the excavation at a maximum spacing of 20 feet. A minimum of 3 flashing barricades shall be placed at any one excavation.

Temporary striping will be permitted only on base course and pavement to be overlaid. Temporary pavement markings to be placed on new asphalt shall be spaced at 25 ft maximum and shall be removable without damage to the new overlay. Method of temporary markings shall be submitted to the Engineer for approval at the preconstruction meeting.

The Contractor shall submit and obtain written approval of traffic control plans from the Engineer five (5) working days prior to implementing.

Temporary lane closures shall be allowed during working hours specified in these Technical Provisions. Temporary lane closures maintained beyond the normal working hours may have a negative economic effect on the local residential, commercial/industrial business, and traveling public. Unless the Contractor secures prior written approval from the Engineer to maintain temporary lane closures beyond the working hours allowed, the Engineer may deduct a fee from a progress payment or bond for each temporary lane closure maintained beyond the allowed working hours. The fee will be accessed at a rate of Five Hundred ($500) per each travel lane per each thirty (30) minute interval, or fraction thereof as required by the Engineer. In no event will work be allowed past 5 p.m.

600-2 PAYMENT. Payment for TRAFFIC CONTROL shall be made at the contract LUMP SUM price bid and shall include full compensation for furnishing all labor, materials, tools, equipment, incidentals, and appurtenant work required to complete the work and no additional compensation will be allowed therefore.

All costs of preparing and obtaining approval of Temporary Traffic Control Plans, shall be included in the bid price for the various contract items of work, and no additional compensation shall be allowed therefore.

END OF TECHNICAL PROVISIONS

APPENDIX A

CPS REQUIREMENTS

STORM DRAIN DEBRIS SCREEN FY 2020/2021 & FY 2021/2022,

VARIOUS LOCATIONS

JN 998 & 999

Attachment A (cont.)

Connector Pipe Screen (CPS) Requirements

The CPS unit prevents trash and debris from entering the storm drain system during dry weather and moderate storm flows by keeping the trash and debris inside the CB. CPS units are not allowed in CBs at locations where sump conditions exist.

The CPS unit shall be designed to retain all trash larger than 5 mm (0.197 inch) in the CB, and shall comply with the following items:

1. The CPS shall be sized, fabricated, and installed conforming to the configurations shown in the CPS Sizing Table 1, Appendices A-1, A-2, A-3, and A-4.
2. The CPS shall not interfere with the operation of an existing or proposed ARS.
3. The CPS unit shall have a sufficient structural integrity to withstand a lateral force of standing water (62.4 lb/ft^3) within the CB area when the screen becomes 100% clogged. CPS units shall be bolted to the CB walls.
4. CPS units shall be configured with deflector plates or screens preventing trash from falling between the screen and connector pipe. The deflector plate shall be designed to withstand a vertical load of 10 lbs per square foot.
5. The gap at the bottom, sides, and joints of CPS units shall not exceed 5 mm (0.197 inch).
6. The perimeter of CPS units shall include a structural frame for stiffness, a bolting surface for fastening to the CB wall, and support for the opening referred to as the "bypass (H_b)" (see Appendix A-1).
7. All CPS parts/components must be sized to fit through the CB's manhole opening and/or CB curb opening.
8. The CPS unit may encroach into the manhole opening no more than 4 inches.
9. The CPS frame shall be fabricated from S-304 stainless steel, or an Agency approved equal stainless steel alloy. The Structural members shall have a minimum thickness of 3/16 inches.
10. The CPS screen shall be fabricated from perforated metal of Type S-304 stainless steel, or an Agency approved equal stainless steel alloy. The screen shall have a minimum thickness of fourteen (14) gauge (0.0781 inch) The geometrical opening shape shall have a diameter of 5 mm (0.197 inch).
11. The screen material used shall have at least 45% open area.
12. Any edge of the CPS that is not flush with the wall or floor of the CB shall be smooth with no prongs or jagged edges.
13. The assembly bolts, screws, nuts, and washers shall be fabricated entirely from S-316 stainless steel. The concrete anchor bolts shall use a Red Head Multi-Set II drop-in anchor, SSRM-38, with Type S-316 stainless steel threaded rods, nuts and washers, or Agency approved equal.

Attachment A (cont.)

Preliminary Measurements. The Contractor shall make detailed measurements of each CB's location, dimension, configuration, and operational condition, including the size and location of the connector pipe, for the proper fabrication of the devices. The Contractor shall submit written records of this information to the District for review and approval prior to fabrication of the CPS units. Improper fabrication of devices due to errors in the measurements shall be corrected at the Contractor's expense.

Cleaning of Existing Catch Basins. The Contractor shall furnish all materials, equipment, tools and labor to cleanout (i.e. remove and dispose of all debris from within and around) all CBs in which CPS units will be installed under this Contract to the maintenance standards specified. Cleanout shall also include the CB connector pipe openings and the first 6 feet thereof. The CB shall be clean at the time of the CPS installation. Any trash and debris that accumulates between the dates the CB is cleaned and the date the device is installed shall be removed prior to installation of the device at the Contractor's expense.

Maintenance Conditions and Maintenance Standards. Following are deficiencies in maintenance conditions and their corresponding maintenance standards which shall apply to this Contract. The cleanout of each CB shall meet the maintenance standards listed as follows:

	Description of Maintenance Condition Deficiency	Description of Maintenance Standard
1.	Trash and debris located immediately in front of curb opening or side opening of CB, and on top or between metal grates of grated CB.	No trash and debris located immediately in front of CB opening, and on top or between metal grates.
2.	Vegetation growing across and/or blocking the basin opening.	No vegetation blocking CB opening.
3.	Trash and debris in the CB.	No trash and debris within the CB.
4.	Trash and debris in the connector pipe opening, upstream or downstream.	No trash and debris in connector pipe opening and/or in the connector pipe for a distance of 6 feet from the opening.

Attachment A (cont.)

Trash and debris shall include, but is not limited to, mud, vegetation, and garbage.

Upon completion of a cleanout operation at a CB and before leaving it, the Contractor shall sweep the top surface of the CB and the area 2 feet around the CB, and shall remove any trash and debris resulting from the cleanout operations. No debris is to be left at a CB for future pick-up.

Method of Removal. All trash and debris required to be removed from the CBs shall be removed in a manner to be determined by the Contractor. The Contractor shall not allow any trash or debris to enter the connector pipe or main line as a result of the cleanout operations.

Debris Disposal. All trash and debris removed under this Contract shall become the property of the Contractor and shall be legally disposed of away from the CB sites. The Contractor is responsible for proper disposal of the trash and debris, including obtaining approvals from all jurisdictional agencies, as applicable. The contractor shall be responsible for contacting and coordinating with LA County Animal Care and Control for pickup and disposal of dead animals. However, the Contractor shall be responsible for removing any dead animal from inside a CB. A list of local Animal Care and Control offices may be obtained at:
http://animalcare.lacounty.gov/wps/portal/acc/aboutus/care_centers.

Staff Gauge. The contractor shall paint a staff gauge per Appendix A-4. The staff gauge shall be located such that it is visible through the CB curb opening or grating.

APPENDIX A-1: CPS CONFIGURATION

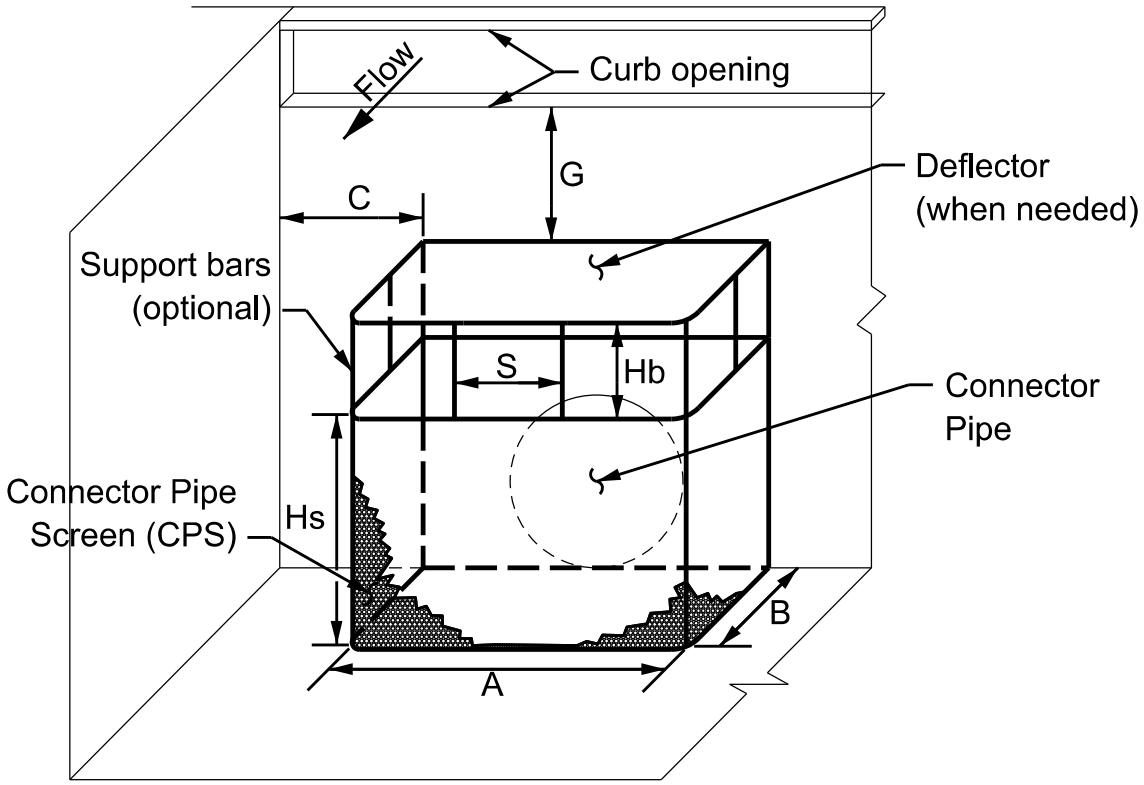

CATCH BASIN INTERIOR VIEW
(Not to scale)

CPS Length	L = A + 2B
CPS Height	Hs
Bypass Height	Hb
Minimum Wall Clearance	C > = 4"
Minimum Bar Spacing	S > = 6"
Minimum Interior Spacing	B > = 10"
Minimum Distance from Street Flow Line	G > = 4"

NOTES

1. The CPS shown above is for illustrative purposes only. The catch basin connector pipe location and the shape and design of the CPS may significantly deviate from the above example.
2. For grated catch basins, "G" shall be measured from the bottom of the grate to the top of the deflector plate.

COUNTY OF LOS ANGELES
DEPARTMENT OF PUBLIC WORKS

APPENDIX A-2: CATCH BASIN

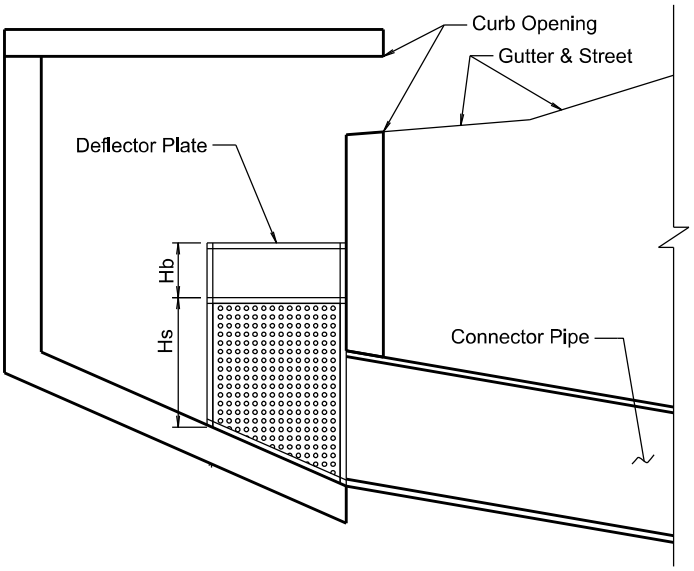

ELEVATION VIEW
NTS

NOTES

1. The CPS shown above is for illustrative purposed only.
2. CPS shall be flush with catch basin walls and invert. Contractor to verify dimensions prior to fabrication.

APPENDIX A-3: EXAMPLE CPS LAYOUTS

CURB OPENING CATCH BASINS (TYPES 300, 306)

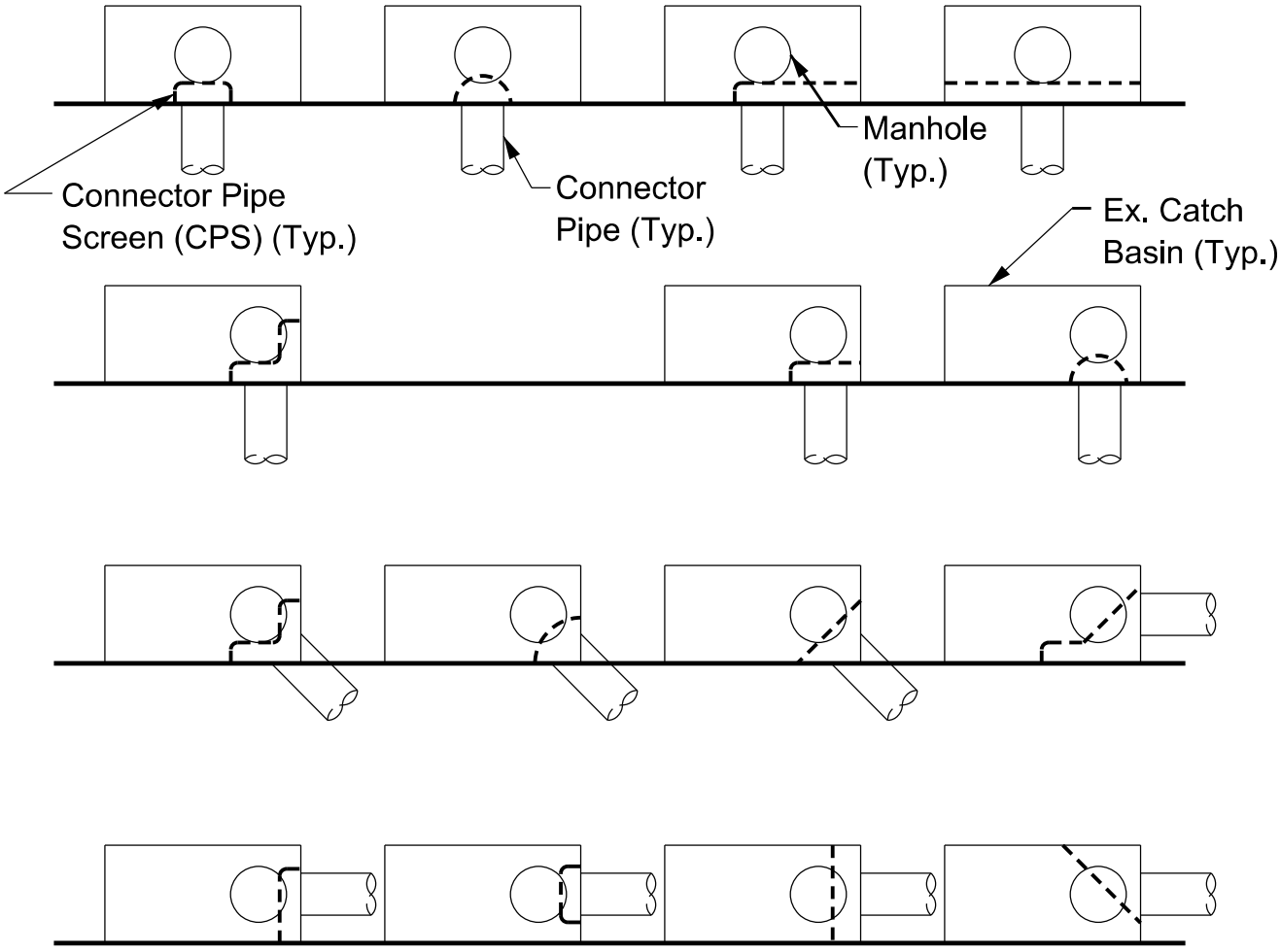

CURB OPENING CATCH BASINS WITH GRATES (TYPES 301, 302)

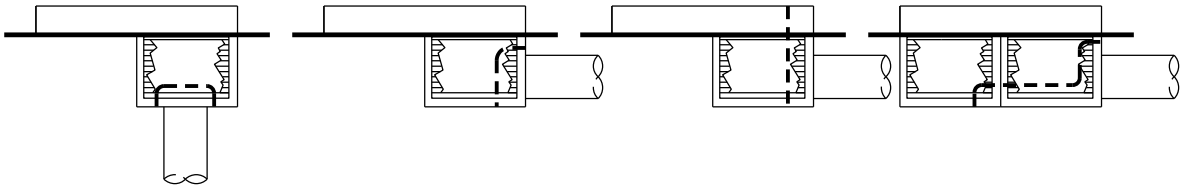

APPENDIX A-3: EXAMPLE CPS LAYOUTS (CONT.)

CURB OPENING CATCH BASINS (TYPES 300)

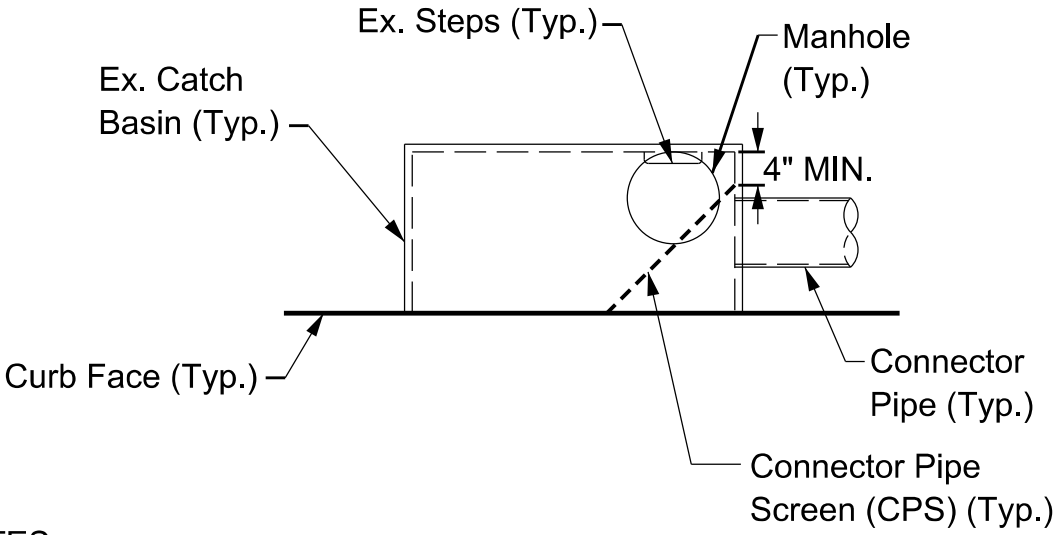

NOTES:

1. The CPS configurations shown above are for illustrative purposes only. This is not a comprehensive list.

2. The CPS unit may encroach into the manhole opening no more than 4 inches.

APPENDIX A-4: STAFF GAUGE

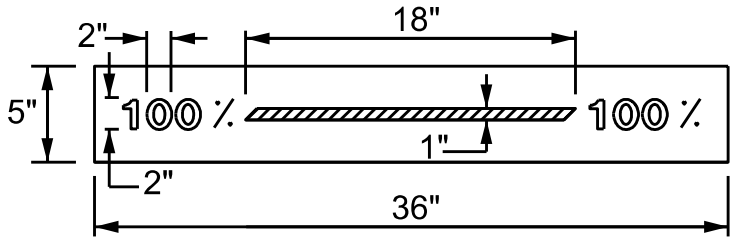

100% STRIPE
(Red Stripe and Numbers on White Background)

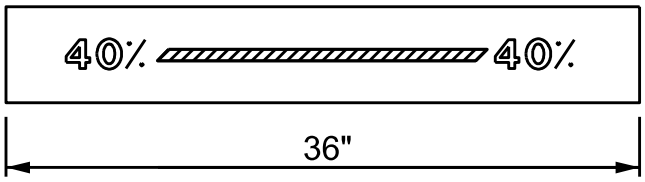

40% STRIPE
(Red Stripe and Numbers on White Background)

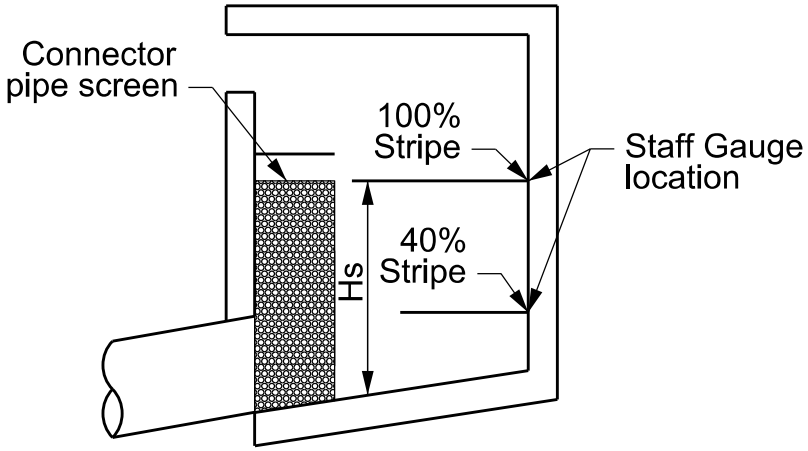

EXAMPLE LAYOUT

"THE PAINT TYPE AND SPECIFICATIONS MUST BE SUBMITTED TO THE DISTRICT FOR REVIEW AND APPROVAL PRIOR TO USE."

1. The Contractor shall paint a staff gauge as shown on an externally visible interior wall of each catch basin.

2. The Contractor shall paint red stripes and numbers on white background labeling 40% and 100% screen height (Hs) as shown above.

3. Surfaces must be clean, dry and free from all contaminants including rust that may impair adhesion.

Revised 07/21/2010

APPENDIX B - CPS SIZING TABLE

Revised 5/4/2016

TABLE 1

CPS SIZING TABLE FOR NON-SUMP CONDITIONS

Catch Basin Type	*V-depth (ft)	CB Width (ft)	No. Grates	** Bypass Height H_b (in)	**Screen Height H_s (in)	**Screen Length L (ft)	**G (in)
300	2.5 (30 inch)	3.5	-	8	8	3.0	4
		7				4.0	
		10				6.0	
		14				7.0	
	2.67 (32 inch)	3.5	-	8	10	3.0	4
		7				4.0	
		10				6.0	
		14				7.0	
	2.83 (34 inch)	3.5	-	8	12	3.0	4
		7				4.0	
		10				6.0	
		14				6.0	
		21				7.0	
	3.0	3.5	-	8	12	3.0	6
		7				4.0	
		10				6.0	
		14		8	14	6.0	4
		21				7.0	
		28				8.0	
	3.5	3.5	-	8	18	3.0	6
		7				4.0	
		10				6.0	
		14				6.0	
		21		10	16	7.0	
		28				8.0	
	4.0	3.5	-	12	20	3.0	6
		7				4.0	
		10				6.0	
		14				6.0	
		21				7.0	
		28				8.0	
	4.5 or greater	3.5	-	12	24	3.0	≥ 8
		7				4.0	
		10				6.0	
		14				6.0	
		21				7.0	
		28				8.0	

* CB's with V-depth values less than given above, the CB must be removed from the project.

** Hb, Hs, L, and G values given above are minimum values.

APPENDIX B - CPS SIZING TABLE

Revised 5/4/2016

TABLE 1

CPS SIZING TABLE FOR NON-SUMP CONDITIONS

Catch Basin Type	*V-depth (ft)	CB Width (ft)	No. Grates	** Bypass Height H_b (in)	**Screen Height H_s (in)	**Screen Length L (ft)	**G (in)
301	3.0 (36 inch)	7	1	8	10	4.0	10
		10	2			5.0	
		14	1			4.0	
		14	2			5.0	
	3.5	7	1	10	12	4.0	12
		10	2			5.0	
		14	1			4.0	
		14	2			5.0	
	4.0	7	1	12	15	4.0	13
		10	2			5.0	
		14	1			4.0	
		14	2			5.0	
	4.5 or greater	7	1	12	18	4.0	≥ 16
		10	2			5.0	
		14	1			4.0	
		14	2			5.0	
302	3.0 (36 inch)	-	1	9	9	2.5	10
		-	2			4.0	
		-	3			5.0	
	3.5	-	1	10	12	2.5	12
		-	2			4.0	
		-	3			5.0	
	4.0 or greater	-	1	10	18	2.5	≥ 12
		-	2			4.0	
		-	3			5.0	
303	3.0 (36 inch)	-	1	9	9	2.5	10
		-	2			4.0	
		-	3			5.0	
	3.5	-	1	10	12	2.5	12
		-	2			4.0	
		-	3			5.0	
	4.0	-	1	12	16	2.5	12
		-	2			4.0	
		-	3			5.0	
	4.5 or greater	-	1	12	22	2.5	≥ 12
		-	2			4.0	
		-	3			5.0	

* CB's with V-depth values less than given above, the CB must be removed from the project.

** Hb, Hs, L, and G values given above are minimum values.

APPENDIX B

CPS DRAWINGS

STORM DRAIN DEBRIS SCREEN FY 2020/2021 & FY 2021/2022,

VARIOUS LOCATIONS

JN 998 & 999

CONNECTOR PIPE SCREEN (CPS)
MODEL USW-1M1 REMOVABLE SCREEN WITH SWIVEL ACCESS PLATE

UNITED STORM WATER, Inc.
Protecting Our Water Resources

USW-1M1

NOTE: THIS MODEL FOR USE IN SHALLOW CATCH BASINS WHERE CLEARANCE FROM BOTTOM OF TRAFFIC GRATE, OR CATCH BASIN DECK, TO TOP OF DEFLECTOR IS 9 1/2" OR LESS. ALLOWS ACCESS FOR MOSQUITO ABATEMENT ACTIVITIES.

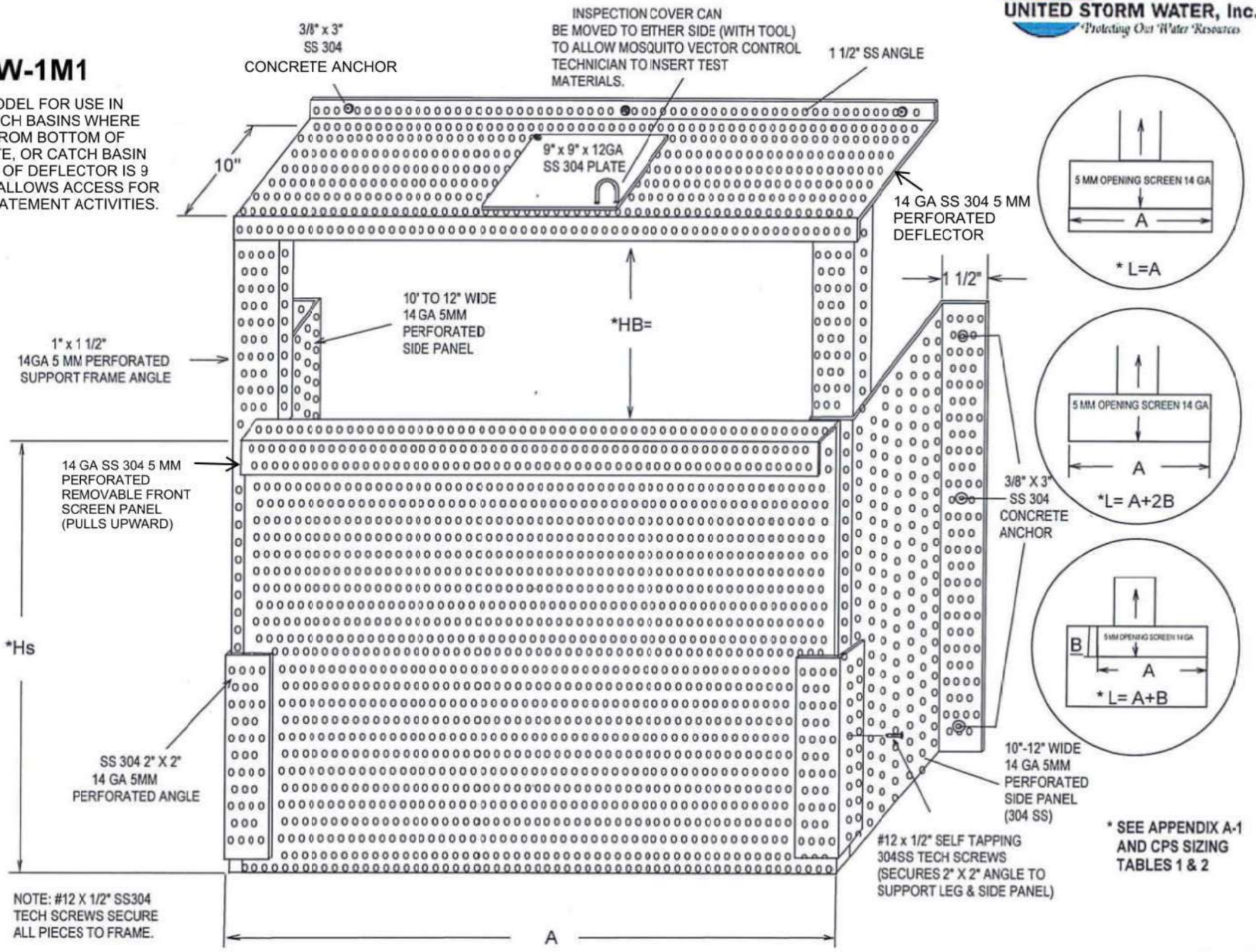

* SEE APPENDIX A-1 AND CPS SIZING TABLES 1 & 2

CONNECTOR PIPE SCREEN (CPS)
MODEL USW-1M2 REMOVABLE SCREEN WITH HINGED DEFLECTOR ACCESS

UNITED STORM WATER, Inc.
Protecting Our Water Resources

USW-1M2

NOTE: THIS MODEL FOR USE IN CATCH BASINS WHERE THERE IS 10" OR MORE CLEARANCE FROM BOTTOM OF TRAFFIC GRATE, OR CATCH BASIN DECK, TO TOP OF DEFLECTOR FOR MOSQUITO ABATEMENT ACTIVITIES.

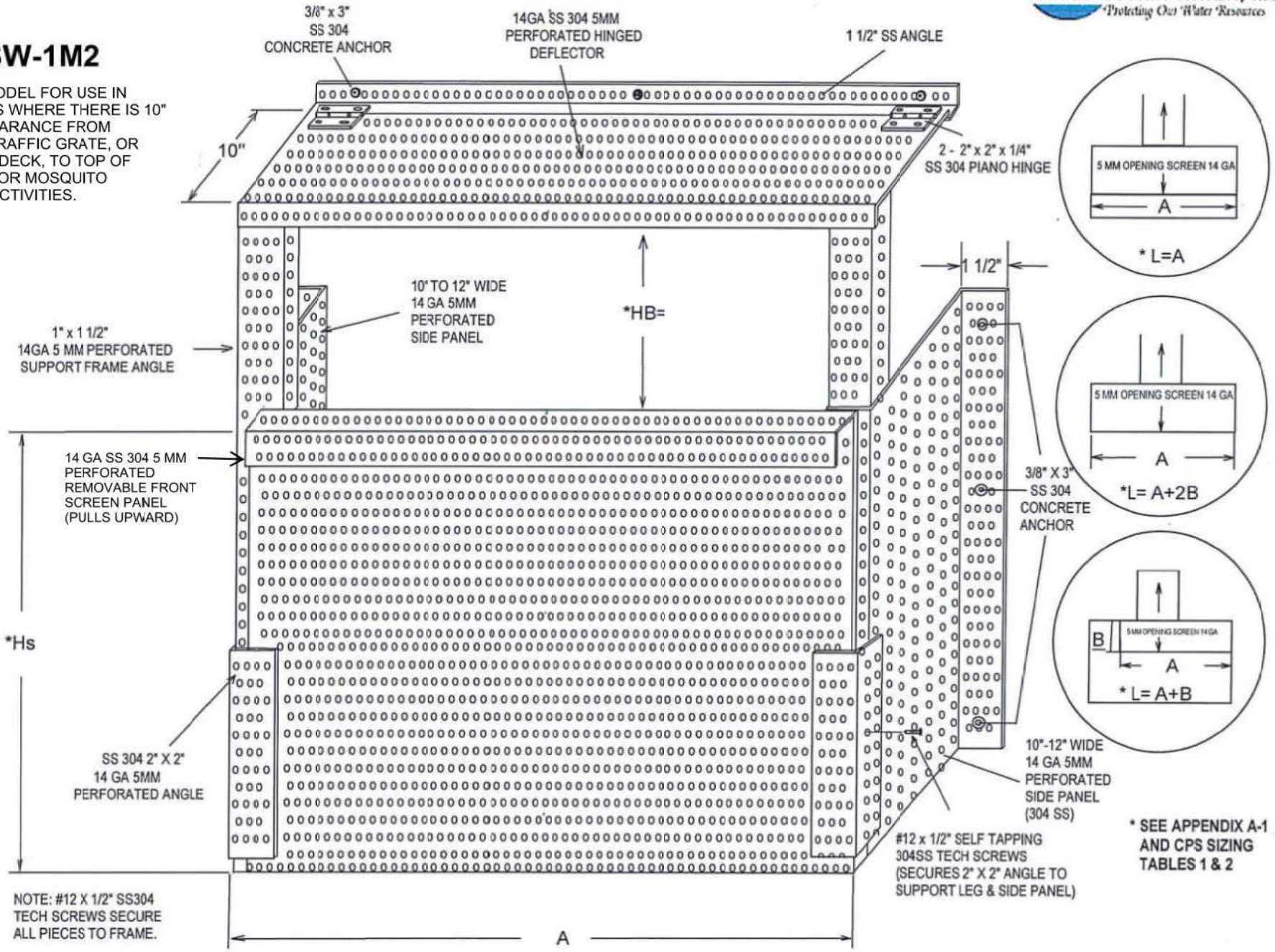

* SEE APPENDIX A-1 AND CPS SIZING TABLES 1 & 2

APPENDIX C

APPROVED CPS VENDORS

STORM DRAIN DEBRIS SCREEN FY 2020/2021 & FY 2021/2022,

VARIOUS LOCATIONS

JN 998 & 999

COUNTY OF LOS ANGELES

DEPARTMENT OF PUBLIC WORKS

AUTOMATIC RETRACTABLE SCREEN (ARS) AND CONNECTOR PIPE SCREEN (CPS) CATCH BASINS ACCEPTED FOR MINIMUM REDUCTION IN CATCH BASIN HYDRAULIC CAPACITY

1. Manufacturer: **American Storm Water Inc.**
Model(s): Surf-Gate (ARS)
20846 S Normandie Ave.
Torrance, CA 90502
Contact: Todd Waters
(310) 354-9999, Ext. 284
twaters@AmericanStormWater.com
http://www.americanstormwater.com/

2. Manufacturer: **G2 Construction Inc.**
Model(s): CL12 (ARS), CPS Modular, EDC13-A (FBI)
1352 E Borchard Ave
Santa Ana, CA 92705
Contact: John R. Alvarado
(714) 748-4242
info@g2construction.com
http://www.g2construction.com/

3. Manufacturer: **Orange Precision Metal Fabrication**
Supplier: **West Coast Storm Inc**
Model(s): ARS, CPS
654 South Lincoln Ave
San Bernardino, CA 92408
(909) 890-5700
Contact: Ralph Padilla

4. Manufacturer: **Hydra TMDL Systems Inc.**
Model(s): Bio Clean CPS
77851 Las Montanas Rd, Suite A
Palm Desert, CA 92111

5. Manufacturer: **United Storm Water Inc.**
Model(s): Clean Screen Model #3 (ARS), Wing-Gate (ARS), USW-2M1 (CPS), USW-2M2 (CPS), Connector Pipe Screen (CPS)
14000 E Valley Blvd.
City of Industry, CA 91746
Contact: Lydia Perry
(877) 717-8676
lydia@unitedstormwater.com
http://unitedstormwater.com/

6. Manufacturer: **Advanced Drainage Systems (ADS)**
Model(s): CPS-L, CPS-U, CPS-U-EXT
(800) 821-6710
https://www.adspipe.com/

7. Manufacturer: **Stormwater Treatment Systems/ EnviroEnergy Inc.**
Model(s): ARS (STS-1 Assembly), CPS

8. Manufacturer: **Waterway Solutions, LLC**
Model(s): CPS Guardian

APPENDIX D

SITE PLAN

STORM DRAIN DEBRIS SCREEN FY 2020/2021 & FY 2021/2022,

VARIOUS LOCATIONS

JN 998 & 999

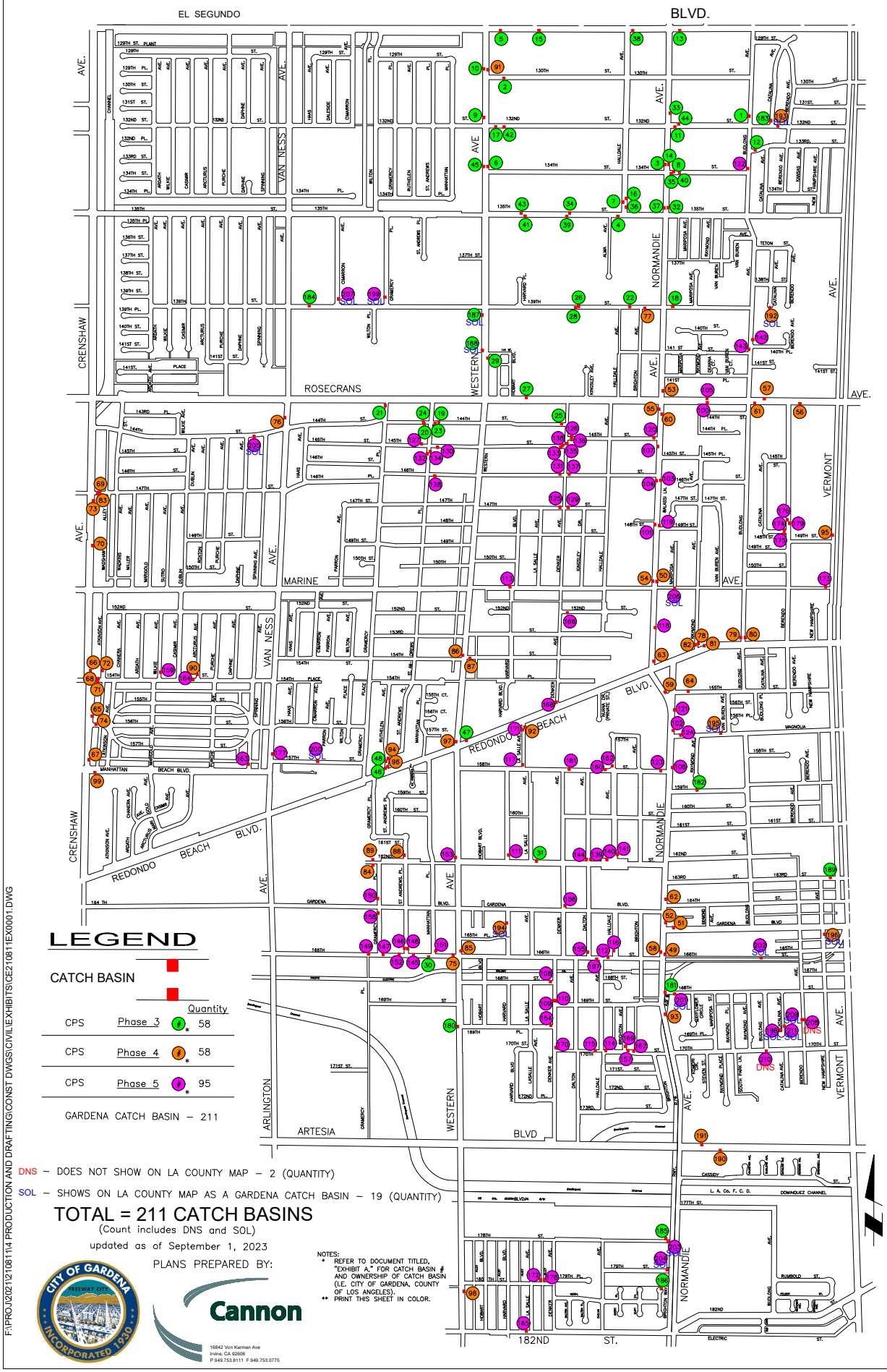

LEGEND

CATCH BASIN

		Quantity
CPS	Phase 3	# * 58
CPS	Phase 4	# * 58
CPS	Phase 5	# * 95

GARDENA CATCH BASIN – 211

DNS – DOES NOT SHOW ON LA COUNTY MAP – 2 (QUANTITY)

SOL – SHOWS ON LA COUNTY MAP AS A GARDENA CATCH BASIN – 19 (QUANTITY)

TOTAL = 211 CATCH BASINS

(Count includes DNS and SOL)

updated as of September 1, 2023

NOTES:
* REFER TO DOCUMENT TITLED, "EXHIBIT A," FOR CATCH BASIN # AND OWNERSHIP OF CATCH BASIN (I.E. CITY OF GARDENA, COUNTY OF LOS ANGELES).
** PRINT THIS SHEET IN COLOR.

PLANS PREPARED BY:

Cannon
16842 Von Karman Ave
Irvine, CA 92606
P 949.753.8111 F 949.753.0775

F:\PROJ\2021\21081\4 PRODUCTION AND DRAFTING\CONST DWGS\CIVIL\EXHIBITS\CE21081EX0001.DWG

APPENDIX E

LIST OF LOCATIONS

STORM DRAIN DEBRIS SCREEN FY 2020/2021 & FY 2021/2022,

VARIOUS LOCATIONS

JN 998 & 999

Cannon

CITY OF GARDENA
STORM DRAIN DEBRIS SCREEN FY 2020/2021 & FY 2021/2022, VARIOUS LOCATIONS
JN 998 & 999

8/31/2023

EXHIBIT A: CITY PROVIDES THE FOLLOWING INFORMATION																
		http://dpw.lacounty.gov/fcd/stormdrain/disclaimer.cfm						Field Data								
No.	Device To Be Installed	LACFCD CB ID No.	Ownership	Drain Name	Street Name	Nearest Cross Street	Side of Street	CB Type (SPPWC Std. 2021)	Number of Grates	Sump (Y/N)	CB Width "W" (ft)	Curb Face Height "X" (in)	"Y" (V-X) (in)	V Depth (in)	Notes	Northing	Easting
1	CPS	1701122	LACFCD	BI 0537 - U2 LINE A	BUDLONG AVE	W 132ND ST	WEST	300-4	0	N	21	12	50	62		1790769.23	6468002.44
2	CPS	1646059	LACFCD	BI 0537 - U2 LINE C	S WESTERN AVE	W 130TH ST	EAST	300-4	0	N	10	12	36	48		1789746.76	6466374.85
3	CPS	1646223	LACFCD	BI 0537 - U2 LINE B	S NORMANDIE AVE	W 134TH ST	WEST	300-4	0	N	7	12	38	50		1790823.32	6471718.79
4	CPS	1646217	LACFCD	BI 0537 - U2 LINE A	W 135TH ST	ALMA AVE	SOUTH	300-4	0	N	7	12	38	50		1789756.16	6465343.57
5	CPS	1646039	LACFCD	BI 0537 - U2 LINE C	EL SEGUNDO BLVD	S WESTERN AVE	SOUTH	300-4	0	N	10	8	45	53		1786930.59	6469884.13
6	CPS	1646203	LACFCD	BI 0537 - U2 LINE C	S WESTERN AVE	W 134TH ST	EAST	300-4	0	N	10	9	27	36		1788183.95	6466890.02
7	CPS	1646218	LACFCD	BI 0537 - U2 LINE A	HALLDALE AVE	W 135TH ST	WEST	300-4	0	N	14	12	41	53		1788218.19	6466568.03
8	CPS	1701137	LACFCD	BI 0537 - U2 LINE B	W 134TH ST	S NORMANDIE AVE	NORTH	300-4	0	N	10	12	38	50		1782543.35	6469143.94
9	CPS	1646058	LACFCD	BI 0537 - U2 LINE C	S WESTERN AVE	132ND ST	WEST	300-4	0	N	7	9	43	52		1788187.33	6466061.22
10	CPS	1646063	LACFCD	BI 0537 - U2 LINE C	S WESTERN AVE	W 130TH ST	WEST	300-4	0	N	7	10	80.5	90		1774218.96	6470587.42
11	CPS	1701120	LACFCD	BI 0537 - U2 LINE B	W 132ND ST	S NORMANDIE AVE	SOUTH	300-4	0	N	10	12	62	74		1783241.61	6469146.67
12	CPS	1701134	LACFCD	BI 0537 - U2 LINE A	W 133RD ST	S BUDLONG AV	NORTH	300-4	0	N	3.5	12	30	42		1777630.71	6470146.23
13	CPS	1701106	LACFCD	BI 0537 - U2 LINE C	EL SEGUNDO BLVD	S NORMANDIE AVE	SOUTH	300-4	0	N	7	8	42	50		1777633.51	6469816.71
14	CPS	1646298	LACFCD	BI 0537 - U2 LINE B	NORMANDIE AVE	W 134TH ST	EAST	300-4	0	N	10	12	37	49		1785276.12	6469125.97
15	CPS	1646035	LACFCD	BI 0537 - U2 LINE C	EL SEGUNDO BLVD	S HARVARD BLVD	SOUTH	300-4	0	N	10	8	44	52		1788220.73	6465858.02
16	CPS	1646220	LACFCD	BI 0537 - U2 LINE A	HALLDALE AVE	W 135TH ST	EAST	300-4	0	N	14	12	44	56		1786867.33	6470251.49
17	CPS	1646053	LACFCD	BI 0537 - U2 LINE C	W 132ND ST	S WESTERN AVE	SOUTH	300-4	0	N	10	12	56	68		1786868.24	6469905.51
18	CPS	1701171	LACFCD	BI 3501 - LINE A	W 139TH ST	S NORMANDIE AVE	NORTH	300-4	0	N	10	11	43	54		1780312.71	6468472.98
19	CPS	1647097	LACFCD	BI 0011	W 144TH ST	SAINT ANDREWS PL	NORTH	300-4	0	N	3.5	10	69	79		1786904.36	6470475.13
20	CPS	1647099	LACFCD	BI 0011	W 144TH ST	SAINT ANDREWS PL	SOUTH	300-4	0	N	3.5	10	55	65		1780307.54	6468513.98
21	CPS	1646260	LACFCD	BI 0011	ROSECRANS AVE	GRAMERCY PL	SOUTH	300-4	0	N	3.5	13	54	67	EXISTING CURB INLET TRASH SCREEN	1787647.45	6471852.40
22	CPS	1646229	LACFCD	BI 3501 - LINE A	W 139TH ST	HALLDALE AVE	NORTH	300-4	0	N	21	9	45	54		1782373.10	6470856.27
23	CPS	1647098	LACFCD	BI 0011	W 144TH ST	SAINT ANDREWS PL	SOUTH	300-4	0	N	3.5	10	46	56		1786778.20	6470609.52
24	CPS	1647100	LACFCD	BI 0011	W 144TH ST	SAINT ANDREWS PL	NORTH	300-4	0	N	3.5	10	34	44		1786711.80	6470537.43
25	CPS	1647096	LACFCD	BI 3501 - LINE B	W 144TH ST	DENKER AVE	NORTH	300-4	0	N	7	10	59	69		1789580.52	6469899.17
26	CPS	1646230	LACFCD	BI 3501 - LINE A	W 139TH ST	HALLDALE AVE	NORTH	300-4	0	N	21	9	37	46		1792066.79	6470614.10
27	CPS	1646246	LACFCD	BI 3501 - LINE B	ROSECRANS AVE	DENKER AVE	NORTH	300-4	0	N	3.5	9	34	43		1782006.45	6470869.18
28	CPS	1646231	LACFCD	BI 3501 - LINE A	W 139TH ST	HALLDALE AVE	SOUTH	300-4	0	N	21	9	44	53		1786884.29	6471848.55
29	CPS	1646238	LACFCD	BI 0011	S WESTERN AVE	ROSECRANS	EAST	300-4	0	N	10	12	32	44		1782906.97	6462660.24
30	CPS	1648156	LACFCD	BI 3501 - LINE H	W 166TH ST	MANHATTAN PL	SOUTH	300-4	0	N	7	11	34	45		1784188.86	6473001.95
31	CPS	1647351	LACFCD	BI 0432 - LINE A	W 162ND ST	LA SALLE AVE	NORTH	300-4	0	N	3.5	10	32	42		1791783.60	6471390.99
32	CPS	1646311	LACFCD	BI 0537 - U2 LINE B - GARDENA	S NORMANDIE AVE	W 135TH ST	EAST	300-4	0	N	10	12	40	52		1785062.52	6467207.63
33	CPS	1646305	LACFCD	BI 0537 - U2 LINE B	S NORMANDIE AVE	W 132ND ST	EAST	300-4	0	N	14	12	63	75		1782248.16	6466457.34
34	CPS	1646216	LACFCD	BI 0537 - U2 LINE A	W 135TH ST	S WESTERN AVE	NORTH	300-4	0	N	14	12	27	39		1789466.01	6463559.62
35	CPS	1701136	LACFCD	BI 0537 - U2 LINE B	S NORMANDIE AVE	W 134th ST	EAST	300-4	0	N	10	12	48	60	COORDINATES NOT IN AVAILABLE INFO		
36	CPS	1646219	LACFCD	BI 0537 - U2 LINE A	HALLDALE AVE	W 135TH ST	EAST	300-4	0	N	14	12	42	54		1786327.36	6464025.85
37	CPS	1646222	LACFCD	BI 0537 - U2 LINE B	S NORMANDIE AVE	W 135TH ST	WEST	300-4	0	N	10	12	39	51		1786287.82	6464028.34
38	CPS	1646027	LACFCD	BI 0537 - U2 LINE C	EL SEGUNDO BLVD	HALLDALE AVE	SOUTH	300-4	0	N	10	8	43	51		1786326.38	6464286.89
39	CPS	1646215	LACFCD	BI 0537 - U2 LINE A	W 135TH ST	S WESTERN AVE	SOUTH	300-4	0	N	3.5	12	29	41		1786326.12	6464543.42
40	CPS	1701138	LACFCD	BI 0537 - U2 LINE B	S NORMANDIE AVE	W 134TH ST	EAST	300-4	0	N	10	12	41	53		1789526.85	6464566.74
41	CPS	1646214	LACFCD	BI 0537 - U2 LINE A	W 135TH ST	S WESTERN AVE	SOUTH	300-4	0	N	3.5	11	27	38		1786286.48	6464544.70
42	CPS	1646054	LACFCD	BI 0537 - U2 LINE C	S WESTERN AVE	W 132ND ST	EAST	300-4	0	N	14	12	40	52		1786331.34	6464810.84
43	CPS	1646213	LACFCD	BI 0537 - U2 LINE A	W 135TH ST	S WESTERN AVE	NORTH	300-4	0	N	14	12	29	41		1779326.12	6468152.04
44	CPS	1701121	LACFCD	BI 0537 - U2 LINE B	S NORMANDIE AVE	W 132ND ST	EAST	300-4	0	N	21	12	50	62		1789514.82	6465593.77
45	CPS	1646202	LACFCD	BI 0537 - U2 LINE C	S WESTERN AVE	W 134TH ST	WEST	300-4	0	N	7	9	40	49		1789540.77	6472030.24
46	CPS	1647382	LACFCD	BI 0306	RUTHELEN AVE	REDONDO BEACH BLVD	WEST	300-4	0	N	7	12	56	68	EXISTING CURB INLET TRASH SCREEN	1790754.84	6463373.93
47	CPS	1647377	LACFCD	BI 0619 - LINE F	REDONDO BEACH BLVD	S WESTERN AVE	NORTH	300-4	0	N	10	10	35	45		1789426.39	6470902.42
48	CPS	1647386	LACFCD	BI 0306	RUTHELEN AVE	REDONDO BEACH BLVD	WEST	300-4	0	N	7	10	32	42	EXISTING CURB INLET TRASH SCREEN	1789427.42	6470637.08
49	CPS	1703086	LACFCD	BI 0010	S NORMANDIE AVE	W 166TH ST	EAST	300-4	0	N	7	13	43	56		1786875.19	6466604.88
50	CPS	1647435	LACFCD	BI 0010	S NORMANDIE AVE	MARINE AVE	EAST	300-4	0	N	3.5	12	33	45		1789535.58	6470489.03

Cannon

CITY OF GARDENA
STORM DRAIN DEBRIS SCREEN FY 2020/2021 & FY 2021/2022, VARIOUS LOCATIONS
JN 998 & 999

8/31/2023

EXHIBIT A: CITY PROVIDES THE FOLLOWING INFORMATION																	
		http://dpw.lacounty.gov/fcd/stormdrain/disclaimer.cfm						Field Data									
No.	Device To Be Installed	LACFCD CB ID No.	Ownership	Drain Name	Street Name	Nearest Cross Street	Side of Street	CB Type (SPPWC Std. 2021)	Number of Grates	Sump (Y/N)	CB Width "W" (ft)	Curb Face Height "X" (in)	"Y" (V-X) (in)	V Depth (in)	Notes	Northing	Easting
51	CPS	1702203	LACFCD	BI 0010	W GARDENA BLVD	S NORMANDIE AVE	NORTH	302-4	3	N	10	11	35	46	EACH GRATE = 3' 5" X 2' 2"	1786491.51	6469132.30
52	CPS	1702202	LACFCD	BI 0010	S NORMANDIE AVE	W GARDENA BLVD	EAST	300-4	0	N	7	12	40	52		1786804.94	6463959.86
53	CPS	1646313	LACFCD	BI 0010	S NORMANDIE AVE	ROSECRANS AVE	EAST	300-4	0	N	10	12	93	105		1785896.16	6465243.36
54	CPS	1647042	LACFCD	BI 0010	S NORMANDIE AVE	MARINE AVE	WEST	300-4	0	N	3.5	12	38	50		1786885.36	6464553.70
55	CPS	1646255	LACFCD	BI 0010	S NORMANDIE AVE	ROSECRANS AVE	WEST	300-4	0	N	7	12	32	44		1786752.76	6469166.13
56	CPS	1701232	LACFCD	BI 0010	ROSECRANS AVE	BERENDO AVE	SOUTH	300-4	0	N	3.5	9	41	50	EXISTING CURB INLET TRASH SCREEN	1791479.82	6467924.05
57	CPS	1701229	LACFCD	BI 0010	ROSECRANS AVE	S BUDLONG AVE	NORTH	300-4	0	N	3.5	9	39	48	EXISTING CURB INLET TRASH SCREEN	1782252.65	6466071.89
58	CPS	1703072	LACFCD	BI 0010	S NORMANDIE AVE	W 166TH ST	WEST	300-4	0	N	7	12	54	66		1785308.36	6471181.64
59	CPS	1702146	LACFCD	BI 0010	S NORMANDIE AVE	W 155TH ST	EAST	300-4	0	N	3.5	12	35	47		1784952.90	6471140.82
60	CPS	1646302	LACFCD	BI 0010	S NORMANDIE AVE	ROSECRANS AVE	EAST	300-4	0	N	14	12	39	51		1788124.31	6469315.30
61	CPS	1701230	LACFCD	BI 0010	ROSECRANS AVE	S BUDLONG AV	SOUTH	300-4	0	N	3.5	9	45	54	EXISTING CURB INLET TRASH SCREEN	1780904.43	6469317.92
62	CPS	1702200	LACFCD	BI 0010	S NORMANDIE AVE	W 164TH ST	EAST	300-4	0	N	3.5	12	37	49		1785379.00	6471211.39
63	CPS	1702139	LACFCD	BI 0010	S NORMANDIE AVE	W REDONDO BEACH BLVD	EAST	300-4	0	N	3.5	12	42	54		1785026.01	6471108.91
64	CPS	1702150	LACFCD	BI 3550 - U3 LINE B	W 155TH ST	NORMANDIE WAY	NORTH	300-4	0	N	6.5	9	55	64		1780253.57	6470061.29
65	CPS	1647264	LACFCD	CRENDENA DRAIN - LINE B	CRENSHAW BLVD	W 156TH ST	EAST	300-4	0	N	7	10	39	49		1779600.82	6470666.86
66	CPS	1647222	LACFCD	CRENDENA DRAIN - LINE B	CRENSHAW BLVD	W 154TH ST	EAST	300-4	0	N	7	10	48	58		1786775.50	6471218.35
67	CPS	1647266	LACFCD	CRENDENA DRAIN - LINE B	CRENSHAW BLVD	MANHATTAN BEACH BLVD	EAST	306-4	0	N	21	12	18	30	CURB OPENING AROUND CURVE	1785085.66	6470467.14
68	CPS	1647223	LACFCD	CRENDENA DRAIN - LATERAL G	W 154TH ST	CRENSHAW BLVD	NORTH	300-4	0	N	3.5	9	51	60		1786855.21	6472501.72
69	CPS	1647161	LACFCD	CRENDENA DRAIN - LATERAL B	W 147TH ST	CRENSHAW BLVD	NORTH	300-4	0	N	7	10	36	46		1780274.60	6469980.83
70	CPS	1647218	LACFCD	CRENDENA DRAIN - LINE A	CRENSHAW BLVD	MARINE AVE	EAST	300-4	0	N	7	11	39	50		1786915.97	6471808.33
71	CPS	1647263	LACFCD	CRENDENA DRAIN - LATERAL G	W 154TH ST	CRENSHAW BLVD	SOUTH	300-4	0	N	7	10	47	57		1780053.60	6470754.27
72	CPS	1647224	LACFCD	CRENDENA DRAIN - LATERAL G	ATKINSON AVE	W 154TH ST	WEST	300-4	0	N	3.5	10	44	54		1779369.09	6470753.33
73	CPS	1647164	LACFCD	CRENDENA DRAIN - LINE A	CRENSHAW BLVD	W 147TH ST	EAST	300-4	0	N	7	11	34	45		1780025.59	6470781.98
74	CPS	1647265	LACFCD	CRENDENA DRAIN - LINE B	W 156TH ST	CRENSHAW BLVD	NORTH	300-4	0	N	10	9	45	54		1786900.49	6470540.89
75	CPS	1648159	LACFCD	BI 3501 - Line H	W 166TH ST	S WESTERN AVE	NORTH	300-4	0	N	14	12	23	35		1783582.12	6468486.75
76	CPS	1646306	LACFCD	BI 0432 - LINE D	VAN NESS AVE	ROSECRANS AVE	WEST	300-4	0	N	10	12	36	48		1780253.81	6469957.08
77	CPS	1646226	LACFCD	BI 3501 - LINE A	W 139TH ST	BRIGHTON AVE	SOUTH	300-4	0	N	10	9	40	49		1790771.21	6464899.62
78	CPS	1702142	LACFCD	BI 3550 - U3 LINE B	RAYMOND AVE	W REDONDO BEACH BLVD	EAST	300-4	0	N	21	8	40	48		1785310.45	6471442.72
79	CPS	1702144	LACFCD	BI 3550 - U3 LINE B	S BUDLONG AVE	W REDONDO BEACH BLVD	WEST	300-4	0	N	14	8	68	76		1783322.05	6471173.19
80	CPS	1702145	LACFCD	BI 3550 - U3 LINE B	S BUDLONG AVE	W REDONDO BEACH BLVD	EAST	300-4	0	N	14	9	41.5	50		1786598.81	6463693.99
81	CPS	1702143	LACFCD	BI 3550 - U3 LINE B	W REDONDO BEACH BLVD	S RAYMOND AVE	NORTH	300-4	0	N	10	9	59	68		1789790.96	6464962.34
82	CPS	1702141	LACFCD	BI 3550 - U3 LINE B	S RAYMOND AVE	W REDONDO BEACH BLVD	WEST	300-4	0	N	14	9	36	45		1783136.78	6470789.94
83	CPS	1647163	LACFCD	CRENDENA DRAIN - LATERAL B	W 147TH ST	CRENSHAW BLVD	SOUTH	300-4	0	N	14	10	50	60		1782904.94	6462844.83
84	CPS	1647313	LACFCD	BI 3501 - LINE G	W 162ND ST	GRAMERCY PL	SOUTH	300-4	0	N	14	11	39	50		1784175.52	6462675.30
85	CPS	1648161	LACFCD	BI 3501 - LINE H	S WESTERN AVE	W 166TH ST	EAST	300-4	0	N	3.5	12	29	41		1784129.50	6473087.90
86	CPS	1647036	LACFCD	BI 0432 - LINE B	S WESTERN AVE	W 154TH ST	WEST	302-4	2	N	7	8	36	44	EACH GRATE = 3'-6" X 2'-2"	1785508.57	6462644.05
87	CPS	1647038	LACFCD	BI 0432 - LINE B	W 154TH ST	S WESTERN AVE	SOUTH	300-4	0	N	3.5	10	31	41		1786802.53	6464553.35
88	CPS	1647317	LACFCD	BI 3501 - LINE F	SAINT ANDREWS PL	W 162ND ST	WEST	300-4	0	N	7	10	67	77		1785483.65	6465183.00
89	CPS	1647314	LACFCD	BI 3501 - LINE G	W 162ND ST	GRAMERCY PL	NORTH	300-4	0	N	7	10	33	43		1785491.97	6463430.11
90	CPS	1647231	LACFCD	BI 9819	ARCTURUS AVE	W 154TH ST	WEST	300-4	0	N	14	10	63	73		1786192.68	6467209.97
91	CPS	1646062	LACFCD	BI 0537 - U2 LINE C	S WESTERN AVE	W 130TH ST	EAST	300-4	0	N	10	9	39	48		1789536.43	6471969.47
92	CPS	1647372	LACFCD	BI 0432 - LINE A	LA SALLE AVE	W REDONDO BEACH BLVD	EAST	300-4	0	N	7	10	56	66	EXISTING CURB INLET TRASH SCREEN	1778277.71	6470583.40
93	CPS	1703079	LACFCD	BI 0010	S NORMANDIE AVE	W 169TH	EAST	300-4	0	N	3.5	12	38	50		1778955.47	6467479.92
94	CPS	1647383	LACFCD	BI 0306	RUTHELEN AVE	W REDONDO BEACH BLVD	EAST	300-4	0	N	7	13	67	80	EXISTING CURB INLET TRASH SCREEN	1778078.87	6472490.12
95	CPS	1702307	LACFCD	BI 0490 - LINE C	S VERMONT AVE	W 149TH ST	WEST	300-4	0	N	21	9	56	65		1780260.19	6467506.59
96	CPS	1647380	LACFCD	BI 0306	W REDONDO BEACH BLVD	RUTHELEN AVE	NORTH	300-4	0	N	7	13	67	80	EXISTING CURB INLET TRASH SCREEN	1789492.91	6470879.41
97	CPS	1647378	LACFCD	BI 0619 - LINE F	S WESTERN AVE	W REDONDO BEACH BLVD	WEST	300-4	0	N	10	10	43	53		1789426.81	6471230.13
98	CPS	1648228	LACFCD	WESTGRAD DRAIN - UNIT 1	S WESTERN AVE	W 180TH ST	EAST	300-4	0	N	7	8	45	53	COORDINATES NOT IN AVAILABLE INFO		
99	CPS	1647267	LACFCD	BI 1250 - U1 LINE B	MANHATTAN BEACH BLVD	CRENSHAW BLVD	SOUTH	300-4	0	N	3.5	12	52	64		1785471.49	6463878.02
100	CPS	1701222	LACFCD	BI 0010	ROSECRANS AVE	S BUDLONG AVE	SOUTH	300-4	0	N	7	9	41	50	EXISTING CURB INLET TRASH SCREEN	1790033.93	6470590.19
101	CPS	1647079	LACFCD	BI 0010	S NORMANDIE AVE	148TH ST	WEST	300-4	0	N	3.5	12	42	54		1791406.00	6467951.12

EXHIBIT A: CITY PROVIDES THE FOLLOWING INFORMATION																	
		http://dpw.lacounty.gov/fcd/stormdrain/disclaimer.cfm						Field Data									
No.	Device To Be Installed	LACFCD CB ID No.	Ownership	Drain Name	Street Name	Nearest Cross Street	Side of Street	CB Type (SPPWC Std. 2021)	Number of Grates	Sump (Y/N)	CB Width "W" (ft)	Curb Face Height "X" (in)	"Y" (V-X) (in)	V Depth (in)	Notes	Northing	Easting
102	CPS	1702152	LACFCD	BI 0010	S NORMANDIE AVE	MAGNOLIA AVE	EAST	300-4	0	N	7	13	41	54		1786768.19	6467144.46
103	CPS	1647430	LACFCD	BI 0010	S NORMANDIE AVE	W 146TH ST	EAST	300-4	0	N	7	12	37	49		1789436.04	6469078.41
104	CPS	1647078	LACFCD	BI 0010	S NORMANDIE AVE	W 146TH ST	WEST	300-4	0	N	3.5	13	27	40		1787290.28	6471882.70
105	CPS	1701223	LACFCD	BI 0010	ROSECRANS AVE	S BUDLONG AVE	NORTH	300-4	0	N	7	9	32	41	EXISTING CURB INLET TRASH SCREEN	1789422.59	6471796.08
106	CPS	1702164	LACFCD	BI 0010	S NORMANDIE AVE	W 158TH ST	EAST	300-4	0	N	3.5	12	42	54		1786125.47	6467175.86
107	CPS	1647076	LACFCD	BI 0010	S NORMANDIE AVE	W 145TH ST	WEST	300-4	0	N	7	12	39	51		1790033.46	6470620.20
108	CPS	1648179	LACFCD	BI 0619 - LINE D	W 168TH ST	DENKER AVE	NORTH	300-4	0	N	3.5	10	33	43		1790785.45	6470555.23
109	CPS	1648182	LACFCD	BI 0619 - LINE D	DENKER AVE	W 169TH ST	WEST	300-4	0	N	3.5	11	37	48		1791351.96	6472072.33
110	CPS	1648181	LACFCD	BI 0619 - LINE D	DENKER AVE	W 169TH ST	EAST	300-4	0	N	3.5	10	43	53		1789439.65	6468558.07
111	CPS	1647354	LACFCD	BI 0432 - LINE A - GARDENA	S HARVARD BLVD	W 162ND ST	EAST	300-4	0	N	14	12	38	50		1790706.26	6468007.47
112	CPS	1648173	LACFCD	BI 0432 - LINE A - GARDENA	W 166TH ST	HALLDALE AVE	NORTH	300-4	0	N	3.5	12	33	45		1790044.03	6467958.45
113	CPS	1647074	LACFCD	BI 3501 - LINE I	MARINE AVE	S HARVARD BLVD	NORTH	300-4	0	N	7	9	68	77		1785750.52	6469227.24
114	CPS	1648193	LACFCD	BI 0432 - LINE E - GARDENA	W 170TH ST	HALLDALE AVE	NORTH	300-4	0	N	7	10	37	47		1790735.88	6463482.51
115	CPS	1648190	LACFCD	BI 0432 - LINE E - GARDENA	W 170TH ST	HALLDALE AVE	NORTH	300-4	0	N	7	10	40	50		1789504.82	6468454.90
116	CPS	1648174	LACFCD	BI 0432 - LINE A - GARDENA	HALLDALE AVE	W 166TH	WEST	300-4	0	N	3.5	12	30	42		1789496.52	6469995.32
117	CPS	1647371	LACFCD	BI 0432 - LINE A - GARDENA	LA SALLE AVE	W 158TH ST	WEST	300-4	0	N	3.5	10	39	49		1790759.00	6470579.28
118	CPS	1647434	LACFCD	BI 0010	S NORMANDIE AVE	W REDONDO BEACH BLVD	EAST	300-4	0	N	3.5	12	34	46		1777598.65	6470260.70
119	CPS	1647432	LACFCD	BI 0010	S NORMANDIE AVE	W 149TH ST	EAST	300-4	0	N	0	1	40	41	GRATE ON DRIVEWAY = 3'-6" X 2'-2"	1780854.52	6469252.59
120	CPS	1647075	LACFCD	BI 0010	W 145TH ST	S NORMANDIE AVE	NORTH	300-4	0	N	7	14	30	44		1786222.69	6469195.86
121	CPS	1702151	LACFCD	BI 0010	S NORMANDIE AVE	NORMANDIE AVE	EAST	300-4	0	N	7	12	50	62		1785780.44	6469227.75
122	CPS	1701139	LACFCD	BI 0537 - U2 LINE A - GARDENA	S BUDLONG AVE	W 134TH ST	WEST	300-4	0	N	10	12	38	50		1783221.58	6469127.08
123	CPS	1702162	LACFCD	BI 0010	W 158TH ST	S NORMANDIE AVE	NORTH	300-4	0	N	7	12	43	55	EXISTING CURB INLET TRASH SCREEN	1786183.16	6469130.15
124	CPS	1702153	LACFCD	BI 0010	MAGNOLIA AVE	S NORMANDIE AVE	NORTH	300-4	0	N	10	12	38	50		1788189.42	6470546.46
125	CPS	1647081	LACFCD	BI 3501 - LINE B	W 147TH ST	DENKER AVE	NORTH	300-4	0	N	3.5	12	64	76		1782049.07	6470782.39
126	CPS	1647094	LACFCD	BI 3501 - LINE B	W 145TH ST	DENKER AVE	NORTH	300-4	0	N	3.5	10	62	72		1785693.06	6470535.41
127	CPS	1647101	LACFCD	BI 3501 - LINE C	W 145TH ST	SAINT ANDREWS PL	NORTH	300-4	0	N	3.5	10	52	62		1778554.14	6469088.48
128	CPS	1647111	LACFCD	BI 3501 - LINE C	W 146TH ST	SAINT ANDREWS PL	SOUTH	300-4	0	N	3.5	10	48	58		1778924.88	6469957.90
129	CPS	1647082	LACFCD	BI 3501 - LINE B	W 147TH ST	DENKER AVE	NORTH	300-4	0	N	3.5	10	69	79		1786912.45	6473044.35
130	CPS	1647105	LACFCD	BI 3501 - LINE C	W 145TH ST	SAINT ANDREWS PL	SOUTH	300-4	0	N	3.5	10	40	50		1783609.39	6470523.00
131	CPS	1647086	LACFCD	BI 3501 - LINE B	W 146TH ST	DENKER AVE	NORTH	300-4	0	N	3.5	10	51	61		1787345.45	6473051.69
132	CPS	1647103	LACFCD	BI 3501 - LINE C	ST ANDREWS PL	W 145TH ST	WEST	300-4	0	N	3.5	10	36	46		1790418.57	6471756.52
133	CPS	1647090	LACFCD	BI 3501 - LINE B	W 145TH ST	DENKER AVE	SOUTH	300-4	0	N	7	10	56	66		1790800.94	6464933.26
134	CPS	1647104	LACFCD	BI 3501 - LINE C	ST ANDREWS PL	W 145TH ST	EAST	300-4	0	N	3.5	10	33	43		1790089.05	6467948.88
135	CPS	1647092	LACFCD	BI 3501 - LINE B	DENKER AVE	W 145TH ST	SOUTH	300-4	0	N	7	10	38	48		1780383.89	6470768.85
136	CPS	1647093	LACFCD	BI 3501 - LINE B	W 145TH ST	DENKER AVE	SOUTH	300-4	0	N	3.5	10	54	64		1780716.51	6470784.07
137	CPS	1647088	LACFCD	BI 3501 - LINE B	W 146TH ST	DENKER AVE	NORTH	300-4	0	N	3.5	10	65	75		1779727.27	6470737.45
138	CPS	1647091	LACFCD	BI 3501 - LINE B	W 145TH ST	DENKER AVE	NORTH	300-4	0	N	3.5	10	63	73		1782676.81	6470925.33
139	CPS	1647344	LACFCD	162TH ST DRAIN	DALTON AVE	W 162ND ST	EAST	300-4	0	N	14	9	73	82		1783570.42	6469148.03
140	CPS	1647341	LACFCD	162TH ST DRAIN	W 162ND ST	HALLDALE AVE	NORTH	300-4	0	N	3.5	10	26	36		1783551.59	6468559.85
141	CPS	1647339	LACFCD	162TH ST DRAIN	HALLDALE AVE	W 162ND ST	EAST	300-4	0	N	7	9	27	36		1778924.79	6469588.26
142	CPS	1701210	LACFCD	BI 3501 - LINE D	S BUDLONG AVE	140TH PL	EAST	300-4	0	N	7	10	47	57		1783551.90	6468464.25
143	CPS	1701213	LACFCD	BI 3501 - LINE D	S BUDLONG AVE	W 141ST ST	WEST	300-4	0	N	3.5	10	44	54		1782923.89	6469186.26
144	CPS	1647345	LACFCD	162TH ST DRAIN	DALTON AVE	W 162ND ST	NORTH	300-4	0	N	14	9	71	80		1784808.92	6472898.47
145	CPS	1648251	LACFCD	BI 3501 - LINE H	W 166TH ST	SAINT ANDREWS PL	NORTH	300-4	0	N	3.5	12	40	52		1784122.50	6473024.87
146	CPS	1648153	LACFCD	BI 3501 - LINE H	ST ANDREWS PL	W 166TH ST	WEST	300-4	0	N	10	10	51	61		1784672.45	6473132.27
147	CPS	1648151	LACFCD	BI 3501 - LINE H	W 166TH ST	GRAMERCY PL	NORTH	300-4	0	N	3.5	12	33	45		1780104.77	6462622.32
148	CPS	1648154	LACFCD	BI 3501 - LINE H	ST ANDREWS PL	W 166TH ST	EAST	300-4	0	N	10	10	60	70		1781634.54	6466839.39
149	CPS	1648148	LACFCD	BI 3501 - LINE F	W 166TH ST	GRAMERCY PL	NORTH	300-4	0	N	12	12	61	73	COORDINATES NOT IN AVAILABLE INFO		
150	CPS	1647311	LACFCD	BI 3501 - LINE F	GRAMERCY PL	W GARDENA BLVD	WEST	300-4	0	N	3.5	10	34	44		1782941.81	6462766.14
151	CPS	1648158	LACFCD	BI 3501 - LINE H	W 166TH ST	MANHATTAN PL	NORTH	300-4	0	N	7	9	48	57		1781848.42	6467366.28
152	CPS	1648152	LACFCD	BI 3501 - LINE H	W 166TH ST	SAINT ANDREWS PL	NORTH	300-4	0	N	3.5	11	50	61		1781859.26	6467465.95

Cannon

CITY OF GARDENA
STORM DRAIN DEBRIS SCREEN FY 2020/2021 & FY 2021/2022, VARIOUS LOCATIONS
JN 998 & 999

8/31/2023

EXHIBIT A: CITY PROVIDES THE FOLLOWING INFORMATION																	
		http://dpw.lacounty.gov/fcd/stormdrain/disclaimer.cfm						Field Data									
No.	Device To Be Installed	LACFCD CB ID No.	Ownership	Drain Name	Street Name	Nearest Cross Street	Side of Street	CB Type (SPPWC Std. 2021)	Number of Grates	Sump (Y/N)	CB Width "W" (ft)	Curb Face Height "X" (in)	"Y" (V-X) (in)	V Depth (in)	Notes	Northing	Easting
153	CPS	1647324	LACFCD	BI 3501 - LINE F	S WESTERN AVE	W 162ND ST	WEST	300-4	0	N	21	9	62	71		1785470.97	6462616.92
154	CPS	1648185	LACFCD	BI 0432 - LINE E - GARDENA	DENKER AVE	W 169TH PL	WEST	300-4	0	N	7	10	53	63		1784885.81	6472499.86
155	CPS	1648171	LACFCD	BI 0432 - LINE A - GARDENA	DALTON AVE	W 166TH	WEST	300-4	0	N	3.5	12	30	42		1784863.13	6472458.95
156	CPS	1647334	LACFCD	BI 0432 - LINE A	DENKER AVE	W GARDENA BLVD	EAST	300-4	0	N	3.5	12	30	42	EXISTING CURB INLET TRASH SCREEN	1786787.63	6468718.42
157	CPS	1648197	LACFCD	BI 0432 - LINE E - GARDENA	W 170TH ST	BRIGHTON AVE	NORTH	300-4	0	N	3.5	10	34	44		1785022.98	6472459.56
158	CPS	1647308	LACFCD	BI 3501 - LINE F	GRAMERCY PL	W GARDENA BLVD	WEST	300-4	0	N	3.5	10	56	66		1785388.84	6467208.64
159	CPS	1647229	LACFCD	BI 9819	W 154TH ST	S WILIKIE AVE	NORTH	300-4	0	N	21	10	38.5	48		1785790.25	6467109.44
160	CPS	1647364	LACFCD	BI 0619 - LINE B	W 158TH ST	HALLDALE AVE	NORTH	300-4	0	N	3.5	10	44	54		1781668.74	6466880.27
161	CPS	1647367	LACFCD	BI 0619 - LINE B	W 158TH ST	MERIT PARK DR	NORTH	300-4	0	N	7	10	62	72		1780881.64	6462603.82
162	CPS	1647363	LACFCD	BI 0619 - LINE B	HALLDALE AVE	W 158TH ST	WEST	300-4	0	N	7	10	46	56		1782012.86	6467793.06
163	CPS	1647253	LACFCD	BI 9819	SPINNING AVE	MANHATTAN BEACH BLVD	WEST	300-4	0	N	14	9	55	64		1786194.14	6467109.58
164	CPS	1647232	LACFCD	BI 9819	W 154TH ST	ARCTURUS AVE	NORTH	300-4	0	N	7	10	56	66		1785755.28	6467108.93
165	CPS	1648218	LACFCD	BI 0432 - LINE C	W 182ND ST	HOBART	NORTH	300-4	0	N	7	9	55	64	COORDINATES NOT IN AVAILABLE INFO		
166	CPS	1647057	LACFCD	BI 0619 - LINE A	W 152ND ST	DENKER AVE	SOUTH	300-4	0	N	3.5	10	45	55		1783170.69	6467165.43
167	CPS	1648196	LACFCD	BI 0432 - LINE E - GARDENA	BRIGHTON WAY	W 170TH ST	WEST	300-4	0	N	3.5	10	34	44	COORDINATES NOT IN AVAILABLE INFO		
168	CPS	1647359	LACFCD	BI 0432 - LINE A	DENKER AVE	W REDONDO BEACH BLVD	WEST	300-4	0	N	7	12	43	55	EXISTING CURB INLET TRASH SCREEN	1776337.01	6471685.51
169	CPS	1648198	LACFCD	BI 0432 - LINE E - GARDENA	BRIGHTON AVE	W 170TH ST	EAST	300-4	0	N	3.5	10	42	52		1776202.46	6470596.10
170	CPS	1648186	LACFCD	BI 0432 - LINE E	DENKER AVE	W 170TH ST	EAST	300-4	0	N	3.5	10	32	42	COORDINATES NOT IN AVAILABLE INFO		
171	CPS	1647373	LACFCD	BI 0432 - LINE A	LA SALLE AVE	W REDONDO BEACH BLVD	WEST	300-4	0	N	7	12	32	44		1776172.08	6471963.28
172	CPS	1648211	LACFCD	BI 0432 - LINE C	W 180TH ST	DENKER AVE	NORTH	300-4	0	N	21	10	43	53		1776297.95	6473035.33
173	CPS	1702132	LACFCD	BI 0490 - LINE C	MARINE AVE	S VERMONT AVE	NORTH	300-4	0	N	10	9	38	47		1778883.50	6469760.18
174	CPS	1702105	LACFCD	BI 3501 - LINE E	148TH ST	BERENDO AVE	SOUTH	300-4	0	N	7	10	66	76		1791449.48	6468033.32
175	CPS	1702106	LACFCD	BI 3501 - LINE E	148TH ST	BERENDO AVE	NORTH	300-4	0	N	7	10	53	63		1781235.26	6471101.90
176	CPS	1702107	LACFCD	BI 3501 - LINE E	BERENDO AVE	148TH ST	WEST	300-4	0	N	7	10	54	64		1779838.23	6470677.70
177	CPS	1647245	LACFCD	BI 9819	VAN NESS	W 157TH ST	EAST	300-4	0	N	14	10	59	69		1786484.28	6467106.09
178	CPS	1648213	LACFCD	BI 0432 - LINE C	W 180TH ST	DENKER AVE	NORTH	300-4	0	N	14	10	34	44		1776124.34	6473217.63
179	CPS	1702108	LACFCD	BI 3501 - LINE E	BERENDO AVE	148TH ST	EAST	300-4	0	N	7	10	42	52		1782361.15	6472731.20
180	CPS	1648167	Gardena	DATA NOT AVAILABLE	S WESTERN AVE	W 169TH ST	WEST	300-4	0	Y	3.5	11	31	42	EXISTING CURB INLET TRASH SCREEN	1787500.91	6467823.61
181	CPS	1703081	Gardena	BI 0010	NORMANDIE AVE	W 168TH	EAST	300-4	0	Y	3.5	12	56	68		1782182.16	6466244.29
182	CPS	1702168	Gardena	DATA NOT AVAILABLE	W 159TH ST	NORMANDIE AVE	NORTH	300-4	0	Y	7	10	44	54	EXISTING CURB INLET TRASH SCREEN	1782953.12	6463601.91
183	CPS	1701125	Gardena	BI 0537 - U2 LINE A	S CATALINA AVE	132ND ST	WEST	302-4	3	Y	22	12	41	53		1792047.22	6463729.22
184	CPS	1646275	Gardena	DATA NOT AVAILABLE	139TH ST	CIMARRON AVE	NORTH	300-4	0	N	10	10	47.5	57		1778944.49	6469607.09
185	CPS	1703150	Gardena	DATA NOT AVAILABLE	W 178TH ST	NORMANDIE AVE	WEST	303-4	1	Y	0	0	37	37	NO CURB OPENING, GRATE IN DRIVEWAY	1785486.24	6464657.78
186	CPS	1703155	Gardena	DATA NOT AVAILABLE	BRIGHTON WAY	180TH ST	EAST	300-4	0	Y	3.5	10	36	46		1786517.07	6467110.68
187	CPS	1646235	Gardena	BI 0011	W 139TH ST	S WESTERN AVE	SOUTH	300-4	0	Y	7	12	36	48	EXISTING CURB INLET TRASH SCREEN	1785508.96	6462970.30
188	CPS	1646239	Gardena	BI 0011	WESTERN AVE	ROSECRANS	WEST	302-4	2	Y	7.5	11	33	44		1786256.50	6463878.70
189	CPS	1702197	Gardena	DATA NOT AVAILABLE	S VERMONT AVE	163RD ST	WEST	300-4	0	N	7	10	35	45	EXISTING CURB INLET TRASH SCREEN	1781637.05	6464880.15
190	CPS		Gardena	MISC. DRAINAGE CONNECTIONS PLANS - HARBOR FWY.	ARTESIA BLVD	NORMANDIE AVE		300-4	0	N	3.5	11	39.5	50.5	EXISTING CURB INLET TRASH SCREEN, COORDINATES NOT IN AVAILABLE INFO		
191	CPS		Gardena	MISC. DRAINAGE CONNECTIONS PLANS - HARBOR FWY.	ARTESIA BLVD	S NORMANDIE AVE		300-4	0	N	4	10	86	96	NO LA COUNTY ID, FOUND WITH ADDRESS FROM CITY OF GARDENA CATCH BASIN INVENTORY, EXISTING CURB INLET TRASH SCREEN, COORDINATES NOT IN AVAILABLE INFO		
192	CPS	1701175	Gardena	BI 3501 - LINE D	S BUDLONG AVE	S CATALINA AVE	EAST	300-4	0	Y	3.5	12	12	24	EXISTING CURB INLET TRASH SCREEN	1789091.12	6463313.65
193	CPS	1701127	Gardena	BI 0537 - U2 LINE A - GARDENA	S CATALINA AVE	132ND ST	EAST	300-4	0	Y	15	10	16	26		1789794.64	6463396.97
194	CPS	1647329	Gardena	DATA NOT AVAILABLE	HARVARD BLVD	W 165TH PL	WEST	300-4	0	Y	3.5	10	30	40		1786769.11	6466552.97
195	CPS	1702156	Gardena	BI 0010	MAGNOLIA AVE	VAN BUREN AVE	NORTH	300-4	0	N	7	10	53	63	EXISTING CURB INLET TRASH SCREEN	1782902.35	6464711.03
196	CPS	1702210	Gardena	DATA NOT AVAILABLE	W GARDENA BLVD	NEW HAMPSHIRE AVE	SOUTH	300-4	0	N	3.5	10	46	56	EXISTING CURB INLET TRASH SCREEN	1781819.05	6465233.67
197	CPS		Gardena	BI 0432 - LINE A	166TH ST	HALLDALE AVE		303-4	1	Y	0	9	31	40	GRATE = 3' 5" X 2' 2", COORDINATES NOT IN AVAILABLE INFO		
198	CPS	1703091	Gardena	DATA NOT AVAILABLE	S CATALINA AVE	170TH ST	WEST	300-4	0	Y	3.5	7	30	37	EXISTING CURB INLET TRASH SCREEN	1790809.34	6467921.71
199	CPS	1646274	Gardena	DATA NOT AVAILABLE	GRAMERCY PL	139TH ST	WEST	300-4	0	Y	10	11	47	58	EXISTING CURB INLET TRASH SCREEN	1778924.06	6470327.94
200	CPS	1647406	Gardena	DATA NOT AVAILABLE	W 157TH ST	VAN NESS AVE	NORTH	300-4	0	Y	3.5	7	30	37	EXISTING CURB INLET TRASH SCREEN	1789719.95	6467325.80
201	CPS	1703080	Gardena	DATA NOT AVAILABLE	W 168TH ST	NORMANDIE AVE	SOUTH	300-4	0	N	3.5	8	30	38		1782211.28	6466065.96

EXHIBIT A: CITY PROVIDES THE FOLLOWING INFORMATION																	
		http://dpw.lacounty.gov/fcd/stormdrain/disclaimer.cfm						Field Data									
No.	Device To Be Installed	LACFCD CB ID No.	Ownership	Drain Name	Street Name	Nearest Cross Street	Side of Street	CB Type (SPPWC Std. 2021)	Number of Grates	Sump (Y/N)	CB Width "W" (ft)	Curb Face Height "X" (in)	"Y" (V-X) (in)	V Depth (in)	Notes	Northing	Easting
202	CPS	1703089	Gardena	DATA NOT AVAILABLE	166TH ST	W 165TH PL	NORTH	300-4	0	Y	13	10	41	51		1780257.41	6468872.92
203	CPS	1703151	Gardena	DATA NOT AVAILABLE	W 178TH ST	NORMANDIE AVE	SOUTH	300-4	0	Y	14	12	52	64	EXISTING CURB INLET TRASH SCREEN OVER HALF	1789802.75	6464165.14
204	CPS	1703152	Gardena	DATA NOT AVAILABLE	179TH ST	N DICKASON DR	NORTH	300-4	0	Y	7	12	49	61		1789718.03	6464210.18
205	CPS	1647131	Gardena	BI 1250 - U2 LINE A & C	W 144TH ST	SPINNING AVE	SOUTH	300-4	0	N	7	13	26	39		1786794.78	6466457.26
206	CPS	1702137	Gardena	BI 0010	MARINE AVE	MARIPOSA AVE	SOUTH	302-4	2	Y	7	11	12	23	EACH GRATE = 3'-6" X 1'-6"	1780261.54	6466654.30
207	CPS	1646273	Gardena	DATA NOT AVAILABLE	139TH ST	GRAMERCY PL	EAST	300-4	0	Y	14	11	47	58	EXISTING CURB INLET TRASH SCREEN	1777963.94	6469125.61
208	CPS			DATA NOT AVAILABLE	BERENDO AVE	168TH ST	EAST	300-4	0	Y	3.5	8	24	32	NO LA COUNTY ID, FOUND WITH AS-BUILTS PLANS PROVIDED BY CITY OF GARDENA, EXISTING CURB INLET TRASH SCREEN, COORDINATES NOT IN AVAILABLE INFO		
209	CPS	1703093	Gardena	DATA NOT AVAILABLE	BERENDO AVE	168TH ST	WEST	300-4	0	Y	3.5	8	27	35	EXISTING CURB INLET TRASH SCREEN	1790726.22	6462981.97
210	CPS			3550 GARDENA PROJECT NO. 3550 GARDENA	W 170TH ST	BUDLONG AVE	SOUTH	300-4	0	Y	28	12	99	111	NO LA COUNTY ID, FOUND WITH AS-BUILTS PLANS PROVIDED BY CITY OF GARDENA. CURB OPENING HAS SCREEN, COORDINATES NOT IN AVAILABLE INFO		
211	CPS	1703092	Gardena	DATA NOT AVAILABLE	CATALINA AVE	168TH ST	EAST	300-4	0	Y	2.5	8	42	50	EXISTING CURB INLET TRASH SCREEN	1777621.58	6469775.11

DEPARTMENT of PUBLIC WORKS
1717 WEST 162nd STREET / GARDENA, CALIFORNIA 90247-3731 / WWW.CITYOFGARDENA.ORG / PHONE (310) 217-9568

NOTICE OF EXEMPTION

TO: ☐ Office of Planning & Research
1400 Tenth Street
Sacramento, CA 95814

☐ County Clerk / Registrar Recorder
ATTN: Environmental Filings Clerk
12400 East Imperial Highway, Room 1101
Norwalk, CA 90650

Project Title: Storm Drain Debris Screen FY 2020/2021 and FY 2021/2022, JN 998 & 999
Project Location (Specific): Various Locations
Project Location (City): Gardena **Location (County):** Los Angeles County
Description of nature, purpose and beneficiaries of project: This project will install Connector Pipe Screens at various storm drains within the City
Name of public agency approving project: City of Gardena

Name of person or agency carrying out project: City of Gardena

Exempt Status: (Check One)

☐ Ministerial: (P.R.C. Sec. 21080[b][1]; Guidelines Sec. 15268)
☐ Declared Emergency: (P.R.C. Sec. 21080[b][3]; Guidelines Sec. 15269[a])
☐ Emergency Project (P.R.C. Sec. 21080[b][4]; Guidelines Sec. 15269[b][c])
x Categorical Exemption: Section 15301 Class 1, Existing Facilities
☐Other: Guidelines Sec. 15061):

Reason why project is exempt: This project consists of minor alteration of existing public facilities and involves negligible or no expansion of use beyond that previously existing.

Contact person: Jun De Castro **Telephone:** 310-217-9642

If filed by applicant:
1. Attach certified document of exempting finding.
2. Has a notice of exemption been filed by the public agency approving the project? ☐ Yes ☐ No

Date received for filing:

11/8/23

CLINT OSORIO Date
Environmental Quality Officer

NOTE: Exempt from Dept. of Fish & Game Wildlife Fee in accordance with de minimis impact finding (735.5[c])

TASHA CERDA, Mayor / MARK E. HENDERSON, Mayor Pro Tem
RODNEY G. TANAKA, Councilmember / PAULETTE C. FRANCIS, Councilmember / WANDA LOVE, Councilmember
MINA SEMENZA, City Clerk / GUY MATO, City Treasurer / CLINT OSORIO, City Manager / CARMEN VASQUEZ, City Attorney

Cannon

December 5, 2023

Jun De Castro
Associate Engineer
City of Gardena
1717 West 162nd Street
Gardena, CA 90247

Sent via email: jdecastro@cityofgardena.org

SUBJECT: **ADDITIONAL SERVICES AGREEMENT 01 – STORM DRAIN DEBRIS SCREEN FY 2020/2021 & 2021/2022, VARIOUS LOCATIONS (JN 998 & 999)**
SCOPE AMENDMENT FOR ADDITIONAL CONSTRUCTION SUPPORT SERVICES

Dear Mr. De Castro

Based on our discussions, this is a scope amendment proposal for additional construction support services. Our team is committed to the success of this project, and the following sections detail our project discussion, scope of services, and fees.

The fees quoted in this proposal are valid for 60 days from the date of this submittal and are based upon current California Prevailing Wages. Please contact me at GaryS@CannonCorp.us or 949-777-1580 with any questions regarding this proposal, or to further discuss project details.

Sincerely,

Gary Essex A. Solsona, PE, QSD
Public Works Manager
C 68420

MC/emd

Cannon

ADDITIONAL SERVICES AGREEMENT

Project Client:	City of Gardena	Date:	December 5, 2023
Project Name:	SD Debris Screen project (JN 998 & 999)	Project Number:	210811

Scope of Additional Services

Task 6000 Construction Support Services

We will provide periodic construction observation services for the Storm Drain Debris Screen FY 2020/2021 & FY 2021/2022 project (JN 998 & 999) at various locations to verify materials incorporated into the work generally conform to the approved project plans, specifications, and material submittals. We have included 6 site visits to perform this observation work and will coordinate the timing of each visit with the contractor and City staff. We will note any material deficiencies and provide photographs as requested by the City.

Assumptions and Exclusions

- Scope excludes inspection services and preparing daily reports

Fee:

Task 6000 Construction Support Services

(*Project Manager: 2 hrs; Asst. Resident Engineer: 48 hrs; Project Admin: 4 hrs)* $ 8,784

T&M Not to Exceed Fee ..... $ 8,784

Authorization:

In witness whereof, the parties hereto have caused this agreement consisting of the Request for Additional Services, and the original signed proposal letter dated October 25, 2021, and any other necessary and applicable documents to be executed and effective as of the date and year first above written. Payment is due within 15 days of completion of work.

Any additions and/or corrections to this agreement will be addressed in a separate agreement.

City of Gardena	Cannon
Allan Rigg, PE, AICP Director of Public Works	Larry Kraemer, PE Director, Public Infrastructure
Date	Date November 30, 2023

City of Gardena

Gardena City Council Meeting

AGENDA REPORT SUMMARY

Agenda Item No. 18.A
Section: DEPARTMENTAL ITEMS - TRANSPORTATION
Meeting Date: December 12, 2023

TO: THE HONORABLE MAYOR AND MEMBERS OF THE GARDENA CITY COUNCIL

AGENDA TITLE: Approve Microtransit Pilot Service Concept

COUNCIL ACTION REQUIRED:
Staff Recommendation: Approve Pilot

RECOMMENDATION AND STAFF SUMMARY:
In 2017 GTrans hired Stantec Consulting Service, Inc. to conduct a comprehensive Line by Line Analysis of fixed route and Special Transit (Paratransit) Service. The purpose was to provide an in-depth study of GTrans' system, evaluating the overall structure and delivery of transit services. The analysis considered the performance of the current transit network and provided an assessment of areas where GTrans could make improvements and efficiencies that would benefit the overall network and its customers. Stantec provided recommendations designed to be implemented in a phased approach, in an effort to improve the system and maintain a more cost effective, sustainable operation.

Out of this study came a series of phased recommendations, including the recommendation to consider software-as-a-service and Microtransit on-demand service for its Paratransit service, to provide a short distance transit option with greater flexibility and convenience for the rider. The study also discussed the need for further evaluation of Line 4, and whether improvements and/or significant changes should be made to better serve our community. Recommendations for Line 4 included incorporating smaller vehicles to access residential areas and shopping plazas, and to target the senior population and major points of interest. Both of these recommendations can be accomplished through the deployment of a new Microtransit service, a flexible, demand-responsive transportation service that integrates technology enabled software for on-demand trip planning on smaller vehicles, similar to Uber and Lyft, in order to provide customers with greater accessibility and connectivity throughout the city.

After researching and soliciting a final bid, GTrans awarded a contract to RideCo for on-demand Microtransit software as approved by the City Council on June 27, 2023. This new software will allow GTrans to comingle the on-demand Microtransit service with its current Paratransit service and transform the current service using a fully automated scheduling and dispatching solution and providing additional features such as booking via website and smartphone applications.

GTrans proposed plan for the pilot is discussed in more detail in the attached Agenda Staff Report.

Therefore, GTrans Staff respectfully recommends that Council approves this 18-month pilot service.

FINANCIAL IMPACT/COST:

The additional costs, estimated at $638,492 were included in the FY24 operating budget previously approved by City Council. Subsequent years of the pilot will be included in the proposed budget for consideration. There is no impact to the General Fund.

ATTACHMENTS:

Approve Microtransit Pilot Staff Report 12_12_2023.pdf
Attachment - Booking Application Examples.pdf

APPROVED:



_____
Clint Osorio, City Manager

City of Gardena
City Council Meeting

AGENDA STAFF REPORT

AGENDA TITLE:

Approve Microtransit Service Pilot Concept

RECOMMENDATION:

Staff respectfully recommends that Council approve proposal for GTrans' 18-month Pilot for Microtransit Service Concept.

BACKGROUND:

In 2017 GTrans hired Stantec Consulting Service, Inc. to conduct a comprehensive Line by Line Analysis of fixed route and Special Transit (Paratransit) Service. The purpose was to provide an in-depth study of GTrans' system, evaluating the overall structure and delivery of transit services. The analysis considered the performance of the current transit network and provided an assessment of areas where GTrans could make improvements and efficiencies that would benefit the overall network and its customers. Stantec provided recommendations designed to be implemented in a phased approach, in an effort to improve the system and maintain a more cost effective, sustainable operation. Their work included outreach to the public, surveys, and on-board ride counts.

Out of this study came a series of phased recommendations, including the recommendation to consider software-as-a-service and Microtransit on-demand service for its Paratransit service, to provide a short distance transit option with greater flexibility and convenience for the rider. The study also discussed the need for further evaluation of Line 4, and whether improvements and/or significant changes should be made to better serve our community. Recommendations for Line 4 included incorporating smaller vehicles to access residential areas and shopping plazas, and to target the senior population and major points of interest. Both of these recommendations can be accomplished through the deployment of a new Microtransit service, a flexible, demand-responsive transportation service that integrates technology enabled software for on-demand trip planning on smaller vehicles, similar to Uber and Lyft, in order to provide customers with greater accessibility and connectivity throughout the city. This review and consideration included GTrans' own trip counts and performance data.

After researching and soliciting a final bid, GTrans awarded a contract to RideCo for on-demand Microtransit software as approved by the City Council on June 27, 2023. This new software will allow GTrans to comingle the on-demand Microtransit service with its current Paratransit service and transform the current service using a fully automated scheduling and dispatching solution and providing additional features such as booking via website and smartphone applications.

Below is a summary of the current service, proposed service, and the next steps in implementing a Microtransit Pilot Service.

Current Paratransit Service

GTrans currently provides special curb-to-curb transportation services for eligible customers within the Gardena, Hawthorne, and adjacent unincorporated areas of Los Angeles County, including Alondra Park and Del Aire, using a fleet of 100% wheelchair-accessible vehicles. Current service is provided by advanced reservation only, and eligible customers must call at least one day in advance (no same-day service). Below is a summary of the current Paratransit service.

Service Hours

- Monday – Friday: 7:00am-4:30pm
- Every other Saturday: 8:00am-2:00pm

Cost/Fares

- $0.75 each way

Eligibility Requirements

Residents within the city limits of Gardena and Hawthorne as well as unincorporated areas of Los Angeles County (Alondra Park and Del Aire) must fall within at least one of the following categories:

1. Must be ages 60 years or above and/or;
2. Certified as eligible under these rules;
3. Persons whose disability makes it impossible for them to travel to or from the nearest bus stop;
4. Any qualifying condition listed in the eligibility application.

GTrans adheres to the Los Angeles County Transit Operators Association (LACTOA) guidelines for passenger requirements to use paratransit services. Applicants are considered eligible if one of the following criteria applies to the applicant:

1. Medicare card
2. Valid California DMV placard receipt
3. Receive supplemental security income or Social Security disability insurance.

Residents of Gardena and Los Angeles County (Alondra Park and Del Aire) must register for the service by visiting the Gardena Senior Citizens Bureau. Residents of Hawthorne must register for service at the Hawthorne Memorial Center.

Current Service Ridership	
Year	**Passengers**
FY19	24,634
FY20	17,215
FY21	5,968
FY22	6,838
FY23	10,393

Current Service Statistics					
	2019	**2020**	**2021**	**2022**	**2023**
Total Hours	9,600	7,706	9,937	4,289	5,890
Service Hours	8,982	7,009	3,500	3,729	5,142
Passengers	22,567	16,949	5,968	6,838	10,357
National Transit Database (NTD) Operating Costs	$ 896,849	$ 880,125	$ 596,416	$ 612,625	$ 639,008
Cost Per Service Hour	$ 99.85	$ 125.57	$ 170.40	$ 164.29	$ 124.27
Cost Per Passenger	$ 39.74	$ 51.93	$ 99.94	$ 89.59	$ 61.70

With the drastic reduction in riders due to the pandemic and high operating costs for the service, GTrans sees Microtransit as way to increase the ridership for the paratransit service as well as maintain/improve the service for our customers and other potential Paratransit-eligible residents in qualifying areas. In addition, there would be a benefit to combining the Microtransit service with both Paratransit and general public customers, increasing mobility in and around the City of Gardena.

Fixed Route – Line 4

As part of Stantec's analysis of GTrans service and their recommendations to improve service and efficiencies, Line 4 was identified as a low performing and costly route. Prior to the pandemic, Line 4 operated on weekdays at approximately 45-minute frequencies. Line 4 served local destinations along Normandie Ave between 135th St and 182nd St, as well as school tripper service and the northern end of El Camino College at Crenshaw Blvd and Manhattan Beach Blvd. Line 4 received an average boarding of about 450 passengers per day and an average of 20 boardings per hour, pre-pandemic. Most trips throughout the day ranged around 14 total boardings, with a few peak-hour trips operating with high ridership around school start and dismissal times. By comparison, GTrans' most productive route pre-pandemic, Line 2, had an average of 6,241 daily passengers, an average of 35 boardings per hour, and a peak load of 65 passengers on weekdays.

Since the pandemic began in 2020, service on Line 4 was temporarily suspended. This modified schedule continues to remain effective due to continuing manpower shortages being experienced nationwide across multiple transit agencies. GTrans has been increasing its recruiting efforts and reevaluating Line 4's ridership trends to find ways to restore service given the current demand and available resources. Line 4 service accounts for only 3% of the systemwide ridership. Although Line 4's role was envisioned to a community circulator route that provides access to local destinations, this route's popularity is limited by its service frequency, indirect routing, and lack of connections to neighboring cities and transit agencies. By providing on-demand mobility through a new Microtransit service, GTrans will be able to provide coverage solutions, and allow access to major points of interest, while elevating the passenger experience. GTrans will further study Line 4 to determine if, in fact, the mobility needs of the community are provided through this new, flexible Microtransit service.

Proposed Service Concept

The Microtransit Pilot Service branded “Flexi, Powered by GTrans”, will focus on the use of on-demand Microtransit software and service as an effective alternative transportation method in geographies served by underperforming Line 4 and Paratransit service. By implementing Flexi, GTrans envisions a new service that will enable an efficient, fully automated scheduling, dispatching and reservation system that would comingle with its current paratransit service, as well as provide an alternate to riders who used Line 4. All Flexi customers will be able to book a reservation via the website, smart phone application or by calling GTrans customer service.

An added benefit to using the automatic dispatching software is that GTrans will be able to offer same day booking for both On-Demand and Paratransit passengers. We often have customers calling for same day services, and we cannot currently accommodate them. By utilizing this new system, we will be able to accommodate those same day requests and in a timely manner.

GTrans anticipates launching this service with a fleet of five Paratransit vehicles, some of which will be newly purchased. These new vehicles will replace already existing vehicles in our fleet that have far surpassed the end of their useful life of eight years. All vehicles will be ADA accessible and will be equipped to facilitate the use of TAP and cash payments.

Service Details

Between April and July of 2018, as part of the Stantec analysis of our services, GTrans held several community meetings to meet with current riders and get their feedback and opinion, this included our current Paratransit riders. In addition to these meetings, Stantec performed onboard surveys with our customers. The results of these conversations and surveys were that there was 95 percent overall satisfaction with the service. When asked about ways to improve the service, the two factors mentioned were wanting longer service hours and more service into Torrance.

As a result of this feedback, Flexi will be operating a total of 106 more hours a month than our current Paratransit service, the new service hours and fares are listed below.

Service Hours		
Type of Service	**Days of Service**	**Hours of Service**
On-Demand (Within Gardena Only)	Monday – Friday	7:00 AM – 9:00 PM
Paratransit (Hawthorne/LA County)	Monday – Friday	7:00 AM – 5:00 PM
Gardena (Paratransit and On-Demand) / Hawthorne / LA County (Del Aire & Alondra Park)	Saturday	10:00 AM – 5:00 PM
Sunday and Holidays	No Service	No Service

Fares	
Type of Service	**Fare One-Way**
On-Demand	$2.00
Paratransit	$0.75

In terms of our service area, the existing Paratransit service does travel outside the service area to a limited number of satellite locations on specific days. During the pandemic, GTrans eliminated or reduced frequency traveled to some of these locations due to a lack of drivers or customer demand. As we designed the Flexi service, we also received feedback from customers that there was a need to visit Torrance satellite locations more frequently, including the Del Amo Mall. This will be accomplished by providing service to the Del Amo mall on Tuesdays and Thursdays, as well as adding a Torrance location to our every Saturday service. Flexi service for on-demand, non-paratransit customers will be limited to locations within the City of Gardena.

Flexi Service Characteristics	
Flexi On-Demand	Within the City of Gardena city limits only
	Pick up and drop off locations will be at existing bus stops and virtual stops within Gardena: • Specific locations are still under consideration. • Stops will include businesses, key City locations and certain bus stops
Paratransit	Curb to Curb service
	Service will include any locations within the cities of Gardena, Hawthorne and unincorporated Los Angeles County areas of Del Aire and Alondra Park
	Service will include satellite locations on certain days

Flexi Satellite Locations		
Days	**Area**	**Location**
Mon	Redondo Beach	South Bay Galleria
Mon/Wed/Fri	Inglewood	Centinela Hospital
		Centinela Freeman Medical Center
		Inglewood Civic Area
		Inglewood Social Security Office
Tue/Thurs	Torrance/South Bay	Little Company of Mary
		Torrance Memorial
		Torrance Social Security Office
		UCLA/Harbor General Hospital
		Torrance Promenade
Saturday	Torrance	Torrance Promenade

Goals and Metrics

The primary goals for the new service are to provide a safe, reliable more cost-effective service for our current Paratransit users as well as better community access for residents and visitors to the City of Gardena, including those customers who used GTrans Line 4. This includes accommodating both scheduled and spontaneous passenger boarding in lower demand areas.

In an effort to streamline how we schedule and dispatch rides we will integrate on-demand trip planning and technology into GTrans service delivery.

To alleviate cost and help reduce the amount of vehicles on the roads we hope to replace short-distanced, local, single-occupancy vehicle trips with alternative transit or shared vehicle options for riders.

We are also looking to provide an updated and efficient paratransit service for our senior and disabled community.

<u>Service Metrics for Evaluation</u>

The pilot will be conducted over 18 months. After a year of data, GTrans will evaluate the effectiveness of the new service, using several transit industry benchmarks. These metrics include the efficiency of the service and the effectiveness and quality of service we are providing. Below are some examples of how we will track those areas:

1. Service Efficiency
    a. Percent of Total Shared Rides
    b. Vehicle Cost per Hour
    c. Ridership – Hourly, Daily, Monthly
2. Service Effectiveness
    a. Overall Passengers per Vehicle Hour (PVH)
    b. Total Completed Rides
3. Service Quality
    a. Average Ride Rating

Outreach

The introduction of any new service constitutes a change for our customers, which can be a challenge. Especially for our Paratransit passengers, we understand that adapting to new features, vehicles and drivers can be difficult to navigate. In anticipation of this, we have developed a comprehensive plan to not only announce the service to the general public, but also to contact our current Paratransit users and the Senior population of Gardena to make sure they understand these changes.

GTrans engaged Arellano and Associates to lead our outreach efforts to make this transition as smooth as possible. Outreach meetings will include an introduction to the service, information on how to create profiles in the new system, introduction to the new vehicles, and general questions and answers. To make the transition easier, we intend to deploy the service first to only the Paratransit customers before we introduce the general public, providing ample time and assistance to our customers who may need some additional help.

Meetings with our Paratransit riders and Paratransit eligible members of the community are already underway and detailed below. Once the service is introduced to our Flexi Paratransit customers, we will deploy our marketing and outreach campaign for the Flexi On-Demand customers as well. These meetings were designed to both provide information and education to both existing customers and non-customers. For existing customers, GTrans provides transportation to and from the meetings. To date we have held four meetings with our Paratransit customers and senior population, with another eight meetings planned before launch. Future meetings will include locations in Hawthorne, as well additional meetings at Gardena's Rowley Park and Nakaoka Center, etc.

- November 28th customer meeting at Nakaoka Community Center
- December 4th meeting with the seniors of the Second Time Around Senior Club at Rowley Park.
- December 4th customer meeting at Nakaoka Community Center.
- December 5th Senior Lunch at Nakaoka, including customers and non-customers.

During these meetings we heard that many customers were concerned that they would no longer be able to call to reserve their ride, but we assured them that this option will not be eliminated. There was also concern over having to share a ride with the general public, and we assured them that all of the same safety precautions our operators take on our fixed route service would be in effect for Flexi service. We heard that customers are looking forward to the added service hours and same day booking options. We will continue to meet with the senior populations to ease any worries on how to utilize the new Flexi service.

In terms of outreach for the on-demand customers, the plan includes additional community meetings that partner with the City's established Neighborhood Watch meetings and take advantage of the many City events in which GTrans already participates. The campaign will also include, print and digital advertising, advertising on social media, collateral on the (Take-Ones and Car Cards), meetings and outreach to local partners and businesses, on our website, and through two videos developed by our software vendor, RideCo.

Next Steps

1. Work with the City of Hawthorne and LA County to renegotiate service contracts to reflect the new service parameters.
2. Receive our first two new vehicles and will outfit them with the new Flexi livery.
3. Hire new Flexi Dispatcher and new Flexi Operator positions to cover extended service hours.

4. Conduct training (software and operational) with new Flexi team beginning in February 2024.
5. Deploy a partial launch of Flexi with our Paratransit customers in late February.
6. Deploy full launch of service to all parties at the end of April 2024.
7. Evaluate the success of service following 12 months of the 18-month pilot.
8. Provide results to Council in the Spring of 2025 to determine the future of the service.

Service and Cost Comparison

The pilot period for the Flexi Microtranist service is 18 months. Flexi service will nearly triple the service hours provided under the current Paratransit service, as it will now be available for customers with a greater daily service span and on Saturdays. With the additional service hours provided, an increase in cost of $638,492 is estimated, or 67 percent. Despite the increased cost, the combining of both Paratransit and On-Demand trips results in a lower estimated cost per passenger, from $61.70 to $52.50, or roughly 18 percent. A comparison of the existing and proposed service is shown below.

Cost Comparison – Over 18 Months		
	Current Paratransit Service	**Flexi Powered by GTrans***
Total Cost	$958,512	$1,597,004
Service Hours	7,713	20,436
Cost Per Service Hour	$124.27	$78.14
Passengers	15,536	30,420
Cost Per Passenger	$61.70	$52.50
Paratransit Service Comparison		
	Current Paratransit Service	**Flexi Powered by GTrans***
Fare	$0.75	$0.75 for Paratransit and $2.00 for General.
Citizens Eligible	60+ and disabled individuals	60+, disabled individuals and anyone traveling within Gardena city limits.
Reservation Timing	24 hours in advance	Same day bookings available

*Flexi performance numbers are estimates based on educated predictions during the 18-month pilot period.

IN CONCLUSION,

Flexi service will provide solutions for two areas of operations that have had high operating costs and low performance for GTrans. We also believe that this new service will be beneficial to our current Paratransit customers as it will provide more hours of service and the opportunity for same day bookings, providing more options for events, outings, and appointments. Our goal is to provide our customers of Paratransit, those who utilize Line 4, as well as new customers, with a convenient, safe and fast way to travel within our City. This service may not only increase our ridership but also increase the ways citizens access our City and its many businesses and activities.

Staff respectfully recommends that Council approves 18-month Microtransit Service Pilot Concept

Submitted by: *Ernie Crespo, Director of Transportation* Date: December 6, 2023

Attachment

Examples of RideCo Booking Application

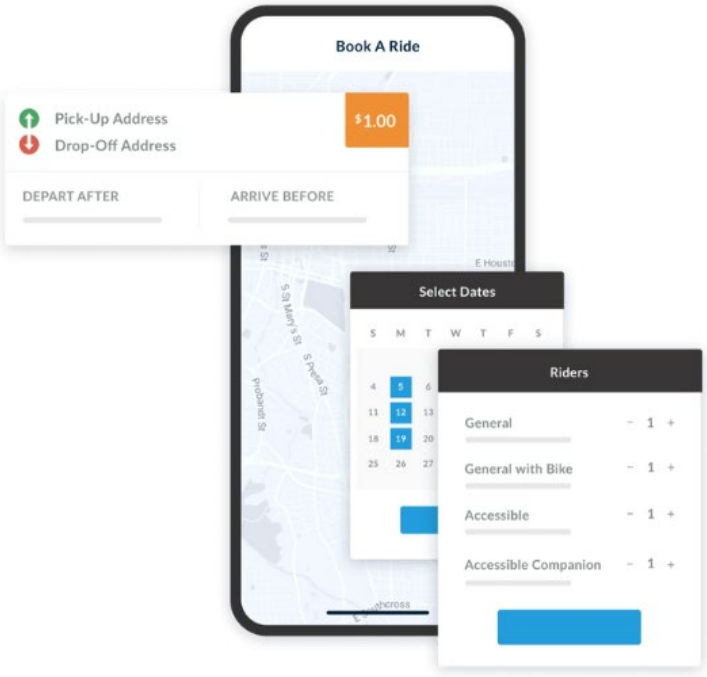

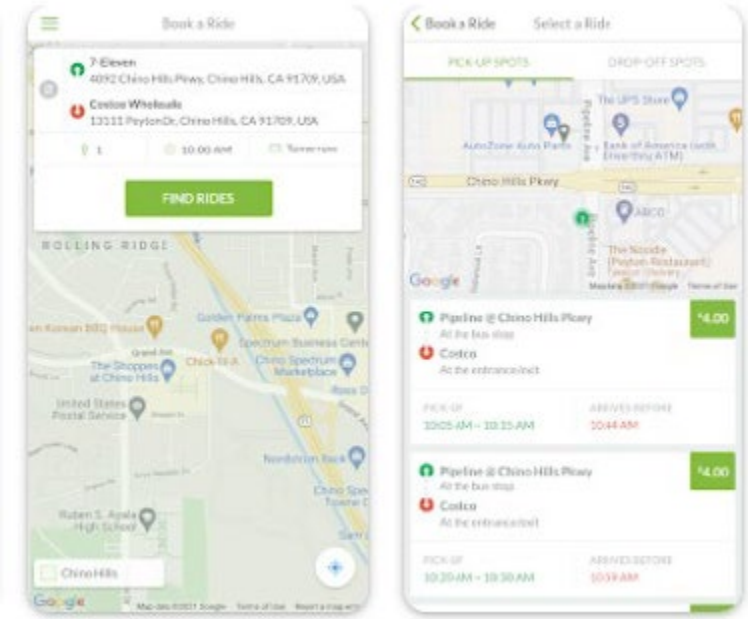

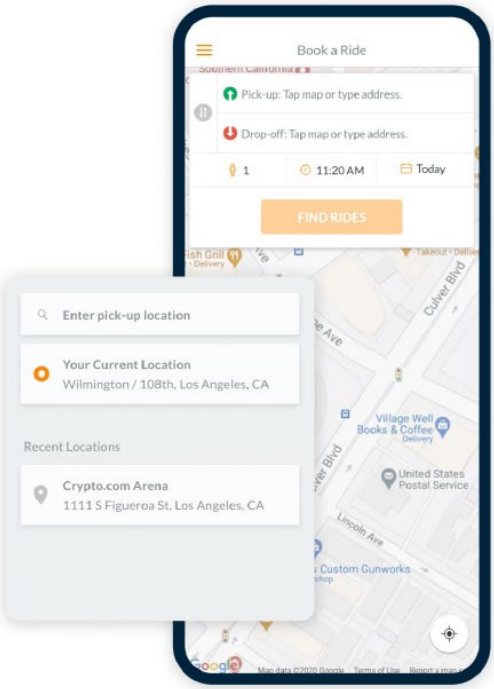

1

Type in pick-up or drop-off location

Or, choose locations from recent locations.

Or, drop pins on the map to select pick-up and drop-off location.

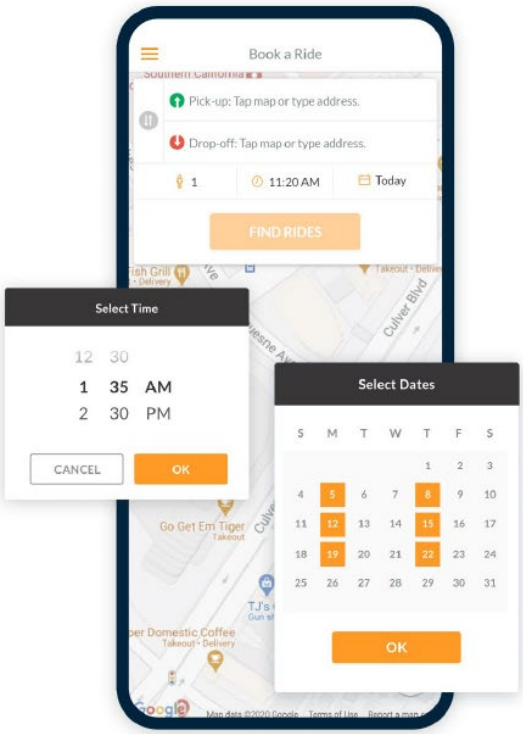

2

Select the time and date of the trip

To schedule single or multiple trips in the future, select the pick-up and drop-off times and dates.

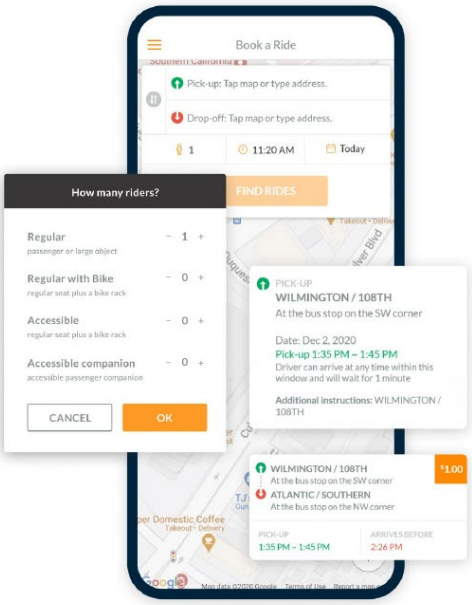

3

Select seat type

Seat type fields and supporting text are customizable to the mobility options you support. Different fares can be set-up for each rider type.

Each search result includes both a "pick-up" and "arrives before" time. This is our promise to pick-up and get riders to their destinations on time.

Additional instructions confirm origin and destination as well as remind the rider about the pick-up window.

RideCo's platform incorporates real-time inputs and analyses such as traffic data, current and pre-booked demand, vehicle locations and more in its dynamic routing engine. The out put is an on-time service that ensures riders know their pick-up and drop-off times across trip options in real time.

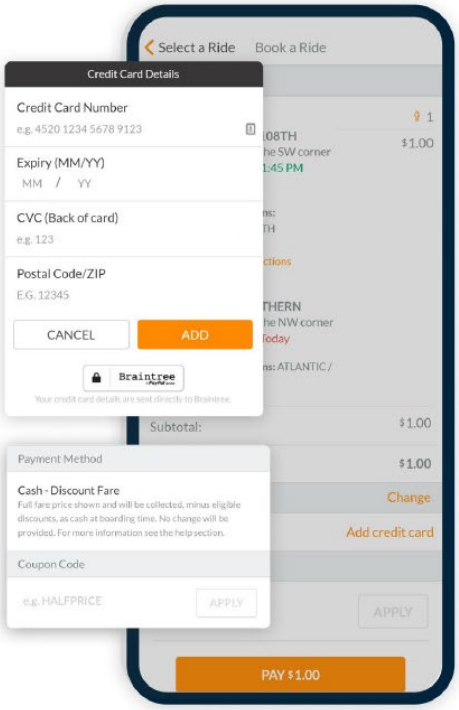

4

Select fare type and confirm trip

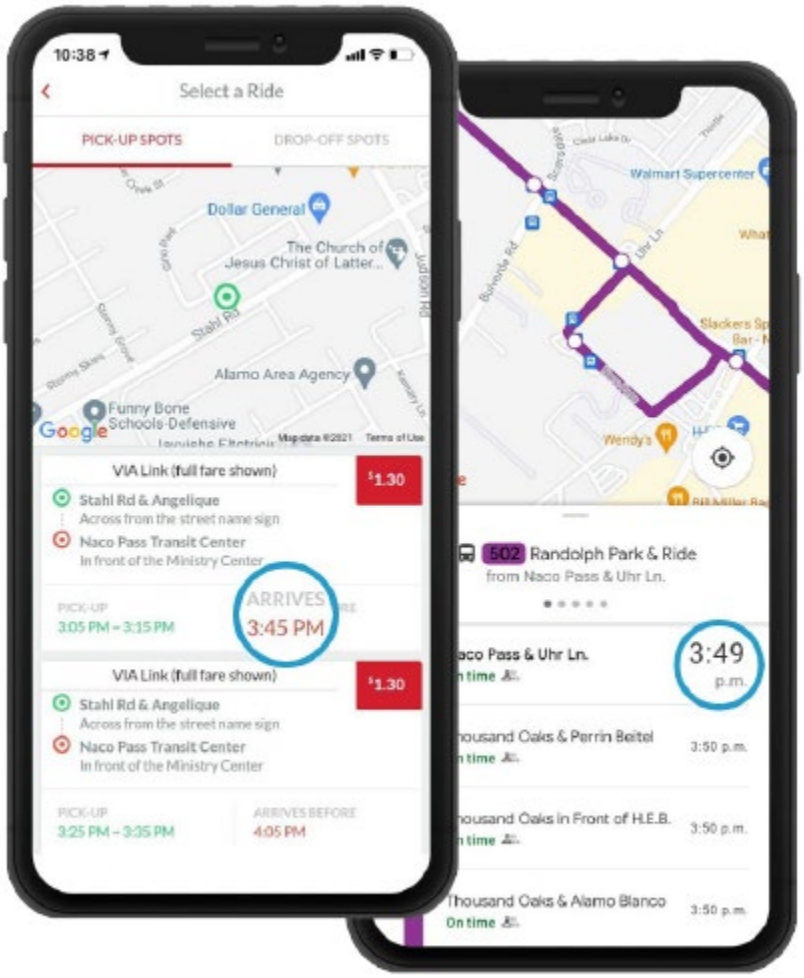
10:38
Select a Ride
PICK-UP SPOTS
DROP-OFF SPOTS
Dollar General
The Church of Jesus Christ of Latter...
Stahl Rd
Alamo Area Agency
Funny Bone Schools-Defensive
Google
VIA Link (full fare shown)
$1.30
Stahl Rd & Angelique
Across from the street name sign
Naco Pass Transit Center
In front of the Ministry Center
PICK-UP
3:05 PM – 3:15 PM
ARRIVES
3:45 PM
VIA Link (full fare shown)
$1.30
Stahl Rd & Angelique
Across from the street name sign
Naco Pass Transit Center
In front of the Ministry Center
PICK-UP
3:25 PM – 3:35 PM
ARRIVES BEFORE
4:05 PM
Walmart Supercenter
Wendy's
502 Randolph Park & Ride
from Naco Pass & Uhr Ln.
3:49
p.m.
3:50 p.m.
3:50 p.m.
Thousand Oaks & Alamo Blanco
On time
3:50 p.m.

City of Gardena

Gardena City Council Meeting

AGENDA REPORT SUMMARY

Agenda Item No. 18.B
Section: DEPARTMENTAL ITEMS - TRANSPORTATION
Meeting Date: December 12, 2023

TO: THE HONORABLE MAYOR AND MEMBERS OF THE GARDENA CITY COUNCIL

AGENDA TITLE: Approve Purchase of Two Electric Microtransit Vans for a Total of $301,904 and a Program Total of $332,094

COUNCIL ACTION REQUIRED:
Staff Recommendation: Approve Purchase

RECOMMENDATION AND STAFF SUMMARY:
In preparation for GTrans' new On-Demand, Microtransit service, GTrans wishes to purchase new, ADA accessible vans that will replace aging minivan vehicles in the fleet. To operate this service, GTrans intends to replace four of its existing vans with new vehicles. In July of 2023, Council approved the purchase of two Braun Ability ProMaster 3500 gasoline vans, which are scheduled to arrive by the end of the year. GTrans is now ready to purchase two (2) battery-electric vans, in keeping with GTrans desire to eventually transition to a fully electric fleet.

Staff brought several types of these vehicles on-site to allow GTrans' operations, maintenance and administrative staff an opportunity to sit in the seats, inspect the engine, and test wheelchair accessibility and access, etc. Ultimately, staff settled on two types of vehicles: the Braun Ability ProMaster 3500 gasoline van, and the Ford E-Transit Electric passenger van. The E-Transit vans are now available for purchase.

GTrans will purchase two, Class Z1- Ford E-Transit Gamechanger vans. The E-Transit Gamechanger van is a modified Ford OEM chassis with an electric motor and rear wheel drive. The vehicle has a 68 kWh battery pack under the floor, can seat between six and eight passengers and allows up to two wheelchair positions, depending on the seating configuration. These vehicles provide more seating and space than the current minivans now used in GTrans' Special Transit service. The purchase will include installation of a nine-camera, on-board surveillance system, which will be connected with GTrans' current system on the rest of the fleet of buses, vans and trolleys. Among many of the new features, the vehicles will include backup cameras and a Seat Link system. Once purchased, GTrans will arrange for the installation of a new livery and GTrans-specific signage and decals.

GTrans is a member of the California Association for Coordinated Transportation (CALACT) and thus able to participate under an assignment clause with options authorized by CALACT/Morongo Basin Transit Authority (MBTA) under their joint procurement for Accessible

Transit/Paratransit Vehicles Contract No. 20-01 Class Z from Creative Bus Sales (d.b.a. Model1). For two vehicles and associated equipment, the cost is $301,904 inclusive of sales tax and fees. GTrans also wishes to include a 10 percent contingency, or $30,190, to account for any unforeseen changes, only to be approved in advance by GTrans staff.

Therefore, staff respectfully recommends that Council authorize the purchase of two vehicles from Creative Bus Sales (d.b.a. Model1) for the cost of $301,904, and a program total of $332,094 which includes a 10 percent contingency.

FINANCIAL IMPACT/COST:

GTrans has local capital funds available and designated for the purchase of these vehicles, and included in FY24 capital budget previously approved by the City Council. There is no impact to the General Fund.

ATTACHMENTS:

Model1 Quote - Class Z Electric Vans (CalACT Quote - GTrans).pdf
CALACT Letter of Assignment 20-01.pdf
ETransit Gamechanger Demo Photos 12_12_2023.pdf

APPROVED:



_____
Clint Osorio, City Manager

MODEL 1 COMMERCIAL VEHICLES

Creative Bus Sales
The Nation's Largest Bus Dealership

CalACT MBTA RFP #20-01 - Class Z - Quote Sheet *(Rev 2023)*

Vehicle Type:	**Class Z1 - Z-1 E-Transit**	**Date:**	**12/1/2023**
Contact:	**Dana Pynn**	**Type of Lift:**	☑ Braun ☐ Side ☑ Rear
Agency:	**City of Gardena G-Trans**	**Seat Material Level:**	**Level 4**
Address:	**13999 S Western Ave.**	**Seat Color:**	**Black**
City, State, Zip:	**Gardena, CA 90249**	**Floor Color :**	**Grey Altro Floor**
Phone:	**310-965-8811**	**Salesperson:**	**Jon Fink - 909-241-0424**
E-Mail:	dpynn@gardenabus.com	**Salesperson Email:**	Jfink@Model1.com
NOTE:	***PER THE PURCHASING COOPERATIVE, PRICING SUBJECT TO CHANGE DUE TO PPI (PRODUCER PRICE INDEX) ESCALATION AND/OR MANUFACTURER PRICE INCREASES. PLEASE CONTACT YOUR SALES REPRESENTATIVE TO CONFIRM QUOTED PRICING IS STILL VALID PRIOR TO ISSUANCE OF PURCHASE ORDER.***		

Quantity:	Description	Price	Ext. Price	ADA
1	Class Z1 - Z-1 E-Transit (Basic) 109" Hiroof EL W3X 148" WB 6+copilot, driver and WC	$99,092.00	$99,092.00	$9,800.00
1	2 - Modular Track Floor System	Std	Std	
1	27 - Delivery Zone 1	800.00	800.00	800.00
8	59 - Freedman Seat Link System (per seat) battery version	540.00	4,320.00	4,320.00
1	77 - Front passenger seat delete+ add equipment tower	1,800.00	1,800.00	1,800.00
1	84 - WC Lift installed behind curbside rear axle	9,500.00	9,500.00	9,500.00
.	**Non-Published Options**			
1	Luminator Camera System per quote	17,563.00	17,563.00	
2	Additional Single Seat	747.00	1,494.00	
1	Add Qstraint Walker Storage - Location TBD	750.00	750.00	
1	Add additional Stanchion by entry door to accommodate fare collection	650.00	650.00	
100	L Track covering installed (except in WC area) - Per foot	5.00	500.00	
1	Modification of Co-Pilot Area to accommodate DVR	800.00	800.00	
.				

NOTE:
PER THE PURCHASING COOPERATIVE, PRICING SUBJECT TO CHANGE DUE TO PPI (PRODUCER PRICE INDEX) ESCALATION AND/OR MANUFACTURER PRICE INCREASES. PLEASE CONTACT YOUR SALES REPRESENTATIVE TO CONFIRM QUOTED PRICING IS STILL VALID PRIOR TO ISSUANCE

Class V - Base Price	$99,092.00	
Published Options	$16,420.00	
Non-Published Options	$21,757.00	
Total	$137,269.00	$26,220.00

The Non-Taxable Amount is the ADA Equipment in the Base and Added as Options

The Taxable Amount Includes the Mobility Rebate of $1,000.00 For Ford Chassis

Gardena* 601

Doc Prep Fee	$85.00	
Non-Taxable	$26,220.00	
Taxable Amount	$112,134.00	
Tax Total	$11,493.74	10.250%
Sub-Total	$148,847.74	
CalACT Fee	$2,059.04	
DMV E-File Fee:	$33.00	
DMV Fee	$0.00	*(Estimated)*
Tire Fee	$12.25	
Local Delivery	$0.00	
Total	**$150,952.02**	
Number of Units	2	
Final Total	**$301,904.04**	

Purchasing of vehicles requires a CALACT membership, letter of assignment, and payment of procurement fee. If you have any questions, please contact CALACT direct at 916-920-8018

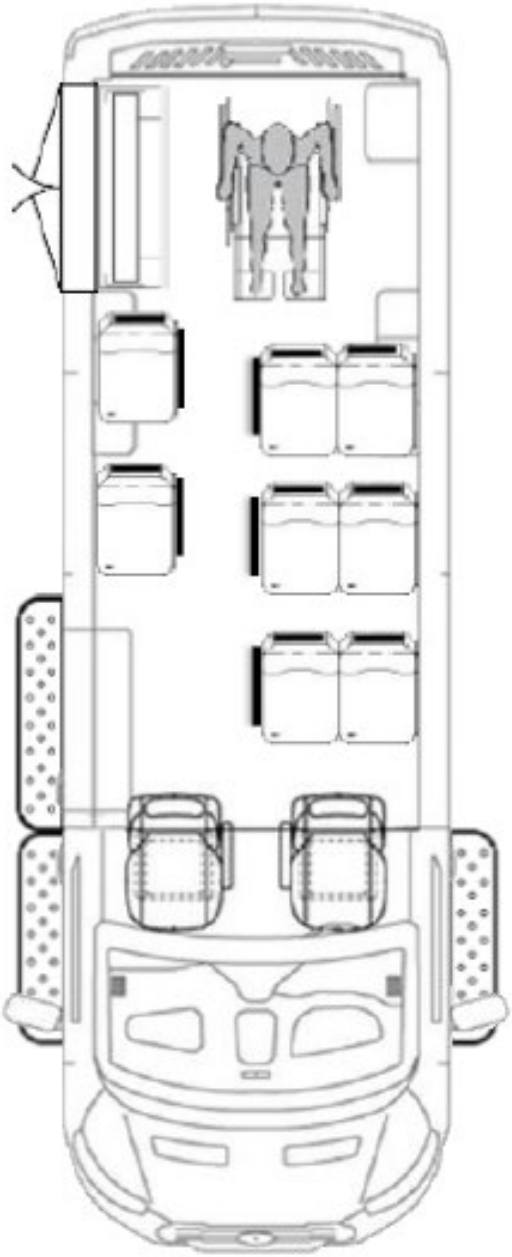

Bill To: City of Gardena, dba: GTrans
Jon Fink
1700 W 162nd St Gardena, California 90247-3732 United States

Fax / Email: jonf@creativebussales.com

Line	Qty	Model	Description		
Camera Surveillance System					
Recorder					
1	1	RR-HDR4K12W	RoadRunner 4K Resolution 12 Camera Mobile Recorder, RsM™ Software, Power Cable, Accelerometer, Event Switch, Heater, with Embedded WiFi/GPS Module (Removable Storage Drive		
2	1	RR-HDD6	RoadRunner HD Removable Hard Disk Drive, 6TB		
3	1	RR-A2WGPS-15	Antenna, WiFi/WiFi/GPS, 15Ft		
4	1	009-0170-007	Cable, Power and Heater, RR-HD, 15A Fuse, #10 Terminal, 7'		
5	1	009-0450-007	Cable, Alarm Inputs, 12, RR-HD, 7ft		
6	1	007-0016-001	Switch, Momentary, Red/Green LED, Stainless, IP67		
7	1	009-0144-015	Cable, Driver Event Switch Extension, HD, 15'		
8	1	009-0258-025	Cable, Patch, Cat6, Molded, Yellow, 25'		
Cameras					
9	1	RR-HDCDF100	RoadRunner HD Camera, Forward Facing Dome w/ Mount, Black, 3.3 mm, FoV: 101° (H), 55° (V)		
10	2	RR-HDC360IRA	RoadRunner HD Camera - 360 Degree, with IR Illumination and Audio Recording		
11	1	RR-HDCDIRA115	RoadRunner HD Camera, Vandal Resistant, Dome w/ IR Illumination & Audio Recording, 2.8 mm, FoV: 112° (H), 61° (V)		
12	4	RR-HDCW1IR100	RoadRunner HD Camera, Vandal Resistant, Wedge w/ IR Illumination, 3.3 mm, FoV: 101° (H), 55° (V), Heater		
13	1	RR-HDCD135	RoadRunner HD Camera, Tapered Dome, Ext, HD, 137x75 FoV		
Video Cables					
14	2	009-0258-010	Cable, Patch, Cat6, Molded, Black, 10'		
15	2	009-0258-015	Cable, Patch, Cat6, Molded, Brown, 15'		
16	2	009-0258-020	Cable, Patch, Cat6, Molded, Red, 20'		
17	3	009-0258-035	Cable, Patch, Cat6, Molded, Green, 35'		
Microphone					
18	2	035-0030-002	Microphone, ETS, RR-HDM2i Surface Mount Omni-Directional Microphone, No Cable Supplied		
19	1	009-0138-030	CABLE, MIC, SINGLE, RR-HD, 30'		
20	1	009-0138-020	CABLE, MIC, SINGLE, RR-HD, 20'		
21	1	009-0139-001	Cable, Audio Splitter Adapter, RR-HD, 8"		

mSET Software Vehicle Licenses

22	1	mSET-H-L	mSET Software, Health Single-Vehicle License		
23	1	mSET-SC-L	mSET Software, SmartClip Single-Vehicle License		

Spare Parts

24	1	RR-HDR4K12W	RoadRunner 4K Resolution 12 Camera Mobile Recorder, RsM™ Software, Power Cable, Accelerometer, Event Switch, Heater, with Embedded WiFi/GPS Module (Removable Storage Drive		

Luminator Technology Group
Tel: 972-424-6511
www.luminator.com



MODEL1 COMMERCIAL VEHICLES

Bus Sales: **888.633.8380** Service: **888.374.8915** Parts: **888.993.5040**

Ford E-Transit

Gamechanger

SPECIFICATIONS

Base Vehicle

Ford Transit 350 Chassis

High Roof, Extra Long Body, Sliding Door

Length	263.4", Extra Long Body
Exterior Height	109.6", High Roof
Interior Height	65.2"
Width	81.3", without mirrors
Wheelbase	178"
Wheels	16" Wheels & Tires, Single Rear Wheels
GVWR	9,500 lbs.

Motor & Battery

Ford OEM Electric Motor, Rear Wheel Drive

198 kW Equivalent to ~266HP / 317TQ Peak Power

68 kWh Battery Pack, Underfloor

Charging

Ford Mobile Charger (Level 1) 120/240V Cable (Included)

Ford Pro™ AC Charging Station (Level 2) (Optional)

Charge 0-100% L2 240V: ~8 Hours (48A) ~12 Hours (30A)

Connectivity

Ford Pro™ E-Telematics & Telematics Essentials

Passenger Capacity

7 Passenger w/ co-pilot or Up to 2 Wheelchair Positions

ADA Equipment

Power Wheelchair Lift, Tie Down Points & Safety System

100% ELECTRIC ADA VAN







CALACT CALIFORNIA ASSOCIATION FOR COORDINATED TRANSPORTATION

12/4/2023

Rachel Yoo
13999 S Western Avenue
Gardena, CA 90249

Dear Rachel:

The CALACT-MBTA Purchasing Cooperative is pleased to make an assignment as detailed in the Assignment to Purchase Agreement.

Additional information is available on the CALACT website at www.calact.org/purchasingco-op that documents the procurement process used by the Cooperative to solicit and award Contract No. 20-01. Prior to acceptance of the vehicles you order, a Post-Delivery Audit must be conducted by your agency if you are using Federal Transit Administration funding to purchase the vehicle.

Thank you for purchasing your vehicles through the Cooperative. Please don't hesitate to contact me if you have any questions at 916-920-8018 or email dan@calact.org.

Sincerely,

Daniel Mundy

Daniel Mundy
Deputy Executive Director

CALACT

4632 Duckhorn Drive • Sacramento, CA 95834 • Phone (916) 920-8018 • Fax (916) 920-8021

CALACT CALIFORNIA ASSOCIATION FOR COORDINATED TRANSPORTATION

Assignment to Purchase Agreement

Assignment #20-01-0950

The CALACT-MBTA Purchasing Cooperative, "Assignor", hereby assigns to Gardena, City of, "Assignee", 2 options to purchase Transit Vehicles ("Vehicles") from the Joint Procurement Cooperative at a price and under the terms and conditions contained in Assignor's Contract No 20-01 with the Contractors awarded to on the Procurement. Only those vehicles and optional features may be purchased using the Solicitation and the purchase may only be from a Seller listed on the Schedule. Specifically, the Assignment shall have the right to purchase:

Quantity and Type of Vehicle(s):

(2) Mobility Trans Class Z-1

Total # of Vehicles: 2

Such ability to purchase commenced, per terms of Contract, on 12/4/2023, and may be exercised at any time on or before 11/4/2024. Assignee must communicate any changes in the order in particular cancellation to the Cooperative as soon as possible.

With respect to the Vehicles assigned hereunder and this Assignment, Assignee agrees to perform all covenants, conditions and obligations required of Assignor under said Contract and agrees to defend, indemnify and hold Assignor harmless from any liability or obligation under said Contract. Assignee further agrees to hold Assignor harmless from any deficiency or defect in the legality or enforcement of the terms of said Contract or option to purchase thereunder. Assignee agrees and understands that Assignor is not acting as a broker or agent in this transaction and is not representing Seller or Assignee, but rather is acting as a principal in assigning its interest in the above-referenced assignment to purchase the Vehicles under the Contract to Assignee.

Please be advised that assignment of said vehicles does not constitute a recommendation or endorsement of this product by the Cooperative. The Assignee is responsible for its choice of vehicle product and options selected. Assignee is responsible for vehicle inspection, acceptance and enforcement of any contract provisions. While PreAward verifications of Buy America, FMVSS and Purchaser's Requirements have been accomplished, Assignee is responsible for Post Award due diligence in this regard.

Purchasing agencies are responsible for and are to exercise due diligence in evaluating the suitability of these vehicles for their operating environment and are responsible for determining their eligibility for funding. In particular, the Cooperative urges you to review the Altoona test report for the vehicle you are purchasing.

Supporting documents for your records may be downloaded from our website at www.calact.org for any reviews or audits your agency will be subject to. Please contact CALACT staff for any assistance you may need at 916-920-8018.

Assignee hereby unconditionally releases and covenants not to sue Assignor upon any claims, liabilities, damages, obligations or judgments whatsoever, in law or in equity, whether known or unknown, or claimed, which they or either of them have or claim to have or which they or either of them may have or claim to have in the future against Assignor, with respect to the Vehicles or any rights whatsoever assigned hereunder.

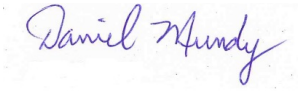

Daniel Mundy
Deputy Executive Director
CALACT
"Assignor"

Approve Purchase of Two Electric Microtransit Vans for a Total of $301,904 and a Program Total of $332,094







